F

Section Contents

BOST-BRONZ (OIL-IMPREGNATED SINTERED BRONZE)
- General Description 136–137
- Catalog Number Selections/Dimensions 138–144

BEAR-N-BRONZ (660 CAST BRONZE)
- General Description 145
- Catalog Number Selections/Dimensions 146–153

BRONZE BEARING EMERGENCY BANK
- BOST-BRONZ & BEAR-N-BRONZ 154

BOStonE F-1 (GLASS FILLED TEFLON)
- General Description/Engineering 155
- Catalog Number Selections/Dimensions 156–157

RULON® 641 BEARINGS
- General Description 158
- Catalog Number Selections/Dimensions 159

BOStonE MOLDED PLASTIC
- General Description/Engineering 160
- Catalog Number Selections/Dimensions 161–171

BOStonE MOLDED NYLON
- Catalog Number Selections/Dimensions 172–173
- Engineering Information 174–182

ANTI-FRICTION (BALL BEARINGS)
- General Description 183–184
- Catalog Number Selections/Dimensions 185–197

SELF-ALIGNING (ROD END & SPHERICAL BEARINGS)
- Catalog Number Selections/Dimensions 198–206
- Engineering Information 207–211

MOUNTED BEARINGS
- General Description 212
- Replacement Bearings & Locking Collars 213–214
- Pillow Blocks 215–222
- Flanged Units 223–230
- Shaft Supports 231
- Take-Up Frames 232
- Stainless Steel Pillow Blocks with Setscrew Locking 233
- Stainless Steel Pillow Blocks with Eccentric Locking Collar 234
- Stainless Steel 2 Bolt Flange 235
- Stainless Steel 4 Bolt Flange 236
- Stainless Steel 3 Bolt Flange Bracket 237
- Stainless Steel Take Up Units 238

ENGINEERING INFORMATION 239-245

BOST-BRONZ Oil-Impregnated Sintered Bronze Bearings

F



BOST-BRONZ is Boston Gear's all-purpose, oil-impregnated porous bronze bearing material. It is manufactured of highest purity metal powders by the powder metallurgy process. This process provides uniformly distributed pores between the metal particles which absorb oil by capillary action. BOST-BRONZ has a self-contained oil supply (approximately 20% by volume) which provides a uniform, protective film over the entire bearing surface. Composition and physical properties are as follows: –

BOST-BRONZ can be used for production and replacement requirements in practically every known industry. It has proven to be efficient under heavy loads at moderate speeds and also under light loads at high speeds. It is ideally suited for applications where normal lubrication is difficult or impossible to provide.

Coeifficent of Friction	
Static	.1 - .3
Dynamic	.02 - .04

Accuracy

The close tolerances of BOST-BRONZ bearings are made possible through expertly controlled manufacturing methods. In addition, the lubricating features of BOST-BRONZ permit reduced shaft clearances — a precision product with precision performance.

Performance

Because of its porous construction, BOST-BRONZ bearings have an oil reservoir when idle — an oil film to start on — an oil film to run on, assuring low starting torque and smooth, quiet positive performance.

Adaptability

BOST-BRONZ bearings are designed for immediate installation and may be used in most applications without additional machining. Oil holes or grooves are not required and turning or boring bearing diameters is normally unnecessary.

Composition %	Density in Grams per Cu. Cent. Impregnated	Tensile Strength Lbs. per Sq. In.	Yield Strength in Compression (0.2% Offset) Lbs. per Sq. In.	Elongation in One Inch %	Porosity by Volume %
Copper (Cu) 87.5-90.5 Iron 1.0 Max. Lead (a) Carbon (Graphite Max.) 1.75 Max. Tin 9.5-10.5 Total Other Elements .05	6.4/6.8	14,000	11,000	1.0	19 Min.
	Conforms to ASTM B438-73 Grade 1, Type 2, and SAE-841 Mil-B-5687C TYPE 1 comp A (Ref:Oil is a SAE 20-30 weight)				

(a) Included in other elements

BOST-BRONZ Oil-Impregnated Sintered Bronze Bearings

Non-Listed Sizes

The stock sizes of BOST-BRONZ bearings listed in this catalog will satisfy the majority of industrial applications. Tooling is available for many metric and additional inch sizes. Where tooling is not available, special sizes can be made to order.

Special Shapes

Many special shapes can be made economically by the powdered metal process. This process is particularly economical for the production of comparatively simple shapes in large volume. More complicated shapes may also be economical to produce by this process when the savings in machining justify the cost of more expensive tooling.

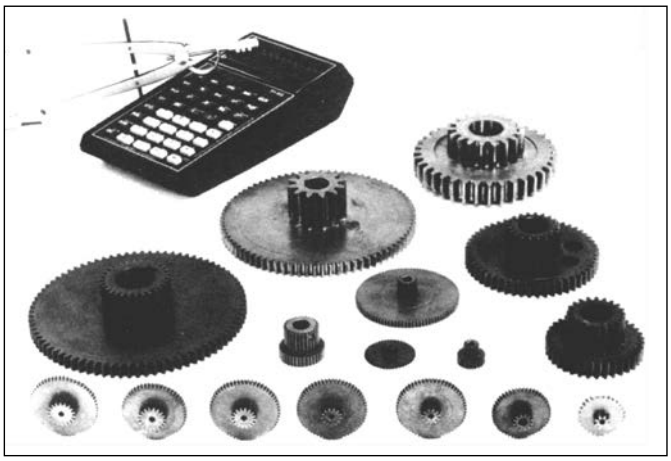

Special Compositions

In addition to our standard BOST-BRONZ, many special compositions can be furnished on a made-to-order basis.

Applications

BOST-BRONZ bearings can be used on any application where the load-carrying capacity required falls within the capabilities of the material. BOST-BRONZ bearings operate efficiently under heavy loads at slow speeds. Because these bearings are supplied with oil impregnation, the original oil content provides long-lasting lubrication. For even longer life requirements, many applications incorporate impregnated felts or other reservoir techniques about the bearing.

Selection

In general, sleeve bearings should be selected with a length of one to two times the shaft diameter and an O.D. approximately 25% larger than the shaft diameter.

A general guide to determination of limiting load and velocity values for sleeve bearings has been established by the use of PV calculations. PV represents Pressure x Velocity, for example 100 psi x 20 fpm yields a PV of 2000.

Maximum PV values for BOST-BRONZ bearings:

Cylindrical & Flange Bearings - 50,000
Thrust Bearings - 10,000

For complete selection and application information, see Engineering Section, Pages 174-182.

BOST-BRONZ Oil-Impregnated Sintered Bronze Bearings

Plain Cylindrical Bearings

F



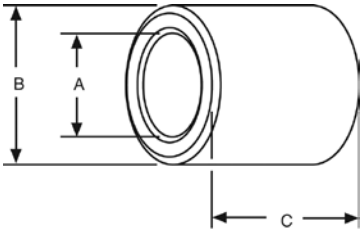

STANDARD TOLERANCES

DIMENSIONS		TOLERANCE
A B	1/8 – 1 1/2 1 3/4 – 2 1/2 2 3/4 - 3 1/2	+.000, – .001 +.000, – .0015 +.000,– .002
C	1/8 – 1-1/2 1 3/4 – 3 4	± .005 ± .0075 ± .010

CONCENTRICITY

DIMENSIONS		TOLERANCE
A	1/8 – 1 1/2 1 5/8 – 3 3 1/4 – 3 1/2	.003 .004 .005

Prices on unlisted sizes and other Boston Gear powder metal parts provided on request.

ALL DIMENSIONS IN INCHES
ORDER BY CATALOG NUMBER OR ITEM CODE

A	B	C	Catalog Number	Item Code
1/8 .127	1/4 .252	1/8	B24-1	34504
		1/4	B24-2	34506
		3/8	B24-3	34508
		1/2	B24-4	34510
	5/16 .315	1/8	B25-1	34512
		1/4	B25-2	34514
		3/8	B25-3	34516
		1/2	B25-4	34518
		5/8	B25-5	34520
3/16 .189	1/4 .252	1/4	B34-2	34522
		3/8	B34-3	34524
		1/2	B34-4	34526
		5/8	B34-5	34528
		3/4	B34-6	34530
	5/16 .314	1/4	B35-2	34532
		3/8	B35-3	34534
		1/2	B35-4	34536
		5/8	B35-5	34538
		3/4	B35-6	34540
	3/8 .377	3/8	B36-3	13561
		1/2	B36-4	13563
		5/8	B36-5	13565
		3/4	B36-6	13567
1/4 .252	5/16 .315	1/4	B45-2	13569
		3/8	B45-3	13571
		1/2	B45-4	13573
		3/4	B45-6	13575
	3/8 .377	1/4	B46-2	34542
		5/16	B46-2 1/2	34544
		3/8	B46-3	34546
		1/2	B46-4	34548
		5/8	B46-5	34550
		3/4	B46-6	34552
		7/8	B46-7	34554
		1	B46-8	34556
		1-1/4	B46-10	34558
	7/16 .439	3/8	B47-3	34560
		1/2	B47-4	34562
		5/8	B47-5	34564
		3/4	B47-6	34566
		7/8	B47-7	34568
		1	B47-8	34570
	1/2 .502	3/8	B48-3	34572
		1/2	B48-4	34574
		5/8	B48-5	34576
		3/4	B48-6	34578
		7/8	B48-7	34580
		1	B48-8	34582
		1-1/4	B48-10	34584
5/16 .314	3/8 .377	3/8	B56-3	34586
		1/2	B56-4	34588
		5/8	B56-5	34590
		3/4	B56-6	34592
		7/8	B56-7	34594
		1	B56-8	34596
	7/16 .439	1/4	B57-2	34598
		3/8	B57-3	34600
		1/2	B57-4	34602
		5/8	B57-5	34604
		3/4	B57-6	34606
		7/8	B57-7	34608
		1	B57-8	34610
		1-1/4	B57-10	34612
		1-3/8	B57-11	34614
	1/2 .502	3/8	B58-3	34616
		1/2	B58-4	34618
		5/8	B58-5	34620
		3/4	B58-6	34622
		7/8	B58-7	34624
		1	B58-8	34626
		1-1/4	B58-10	34628
		1-1/2	B58-12	34630
		1-3/4	B58-14	34632
3/8 .377	7/16 .440	1/2	B67-4	13577
		5/8	B67-5	13579
		3/4	B67-6	13581
		1	B67-8	13583
	1/2 .502	3/8	B68-3	34634
		1/2	B68-4	34636
		5/8	B68-5	34638
		3/4	B68-6	34640
		7/8	B68-7	34642
		1	B68-8	34644
		1-1/4	B68-10	34646
3/8 .377	9/16 .5645	3/8	B69-3	34648
		1/2	B69-4	34650
		5/8	B69-5	34652
		3/4	B69-6	34654
		7/8	B69-7	34656
		1	B69-8	34658
		1-14	B69-10	34660
	5/8 .627	3/8	B610-3	34676
		1/2	B610-4	34678
		5/8	B610-5	34680
		3/4	B610-6	34682
		7/8	B610-7	34684
		1	B610-8	34686
		1-1/4	B610-10	34688
	3/4 .753	3/8	B612-3	34690
		1/2	B612-4	34692
		3/4	B612-6	34694
		1	B612-8	34696
		1-1/4	B612-10	34698
7/16 .439	9/16 .5645	3/8	B79-3	34662
		1/2	B79-4	34664
		3/4	B79-6	34668
		7/8	B79-7	34670
		1	B79-8	34672
		1-1/4	B79-10	34674
	5/8 .628	3/8	B710-3	34700
		1/2	B710-4	34702
		5/8	B710-5	34704
		3/4	B710-6	34706
		7/8	B710-7	34708
		1	B710-8	34710
		1-1/4	B710-10	34712
	11/16 .690	1/2	B711-4	34714
		1	B711-8	34716
		1-1/2	B711-12	34718
1/2 .503	5/8 .628	1/2	B810-4	34720
		5/8	B810-5	34722
		3/4	B810-6	34724
		7/8	B810-7	34726
		1	B810-8	34728
		1-1/8	B810-9	34730
		1-1/4	B810-10	34732
		1-1/2	B810-12	34734
	11/16 .690	1/2	B811-4	34736
		5/8	B811-5	34738
		3/4	B811-6	34740
		7/8	B811-7	34742
		1	B811-8	34744
		1-1/8	B811-9	34746
		1-1/4	B811-10	34748
		1-1/2	B811-12	34750
	3/4 .753	1/2	B812-4	34752
		5/8	B812-5	34754
		3/4	B812-6	34756
		7/8	B812-7	34758
		1	B812-8	34760
		1-1/8	B812-9	34762
		1-1/4	B812-10	34764
		1-1/2	B812-12	34766
		1-3/4	B812-14	34768
		2	B812-16	34770
	13/16 .815	1/2	B813-4	34772
		3/4	B813-6	34774
		1	B813-8	34776
		1-1/2	B813-12	34778
	7/8 .878	1/2	B814-4	34780
		5/8	B814-5	34782
		3/4	B814-6	34784
		7/8	B814-7	34786
		1	B814-8	34788
		1-1/4	B814-10	34790
		1-1/2	B814-12	34792
	1 1.004	3/4	B816-6	13585
		1	B816-8	13587
		1-1/2	B816-12	13589
		2	B816-16	13591
9/16 .565	11/16 .690	1/2	B911-4	34794
		3/4	B911-6	34796
		1	B911-8	34798
		1-1/2	B911-12	34800

On A and B dimensions, tolerances apply to actual (decimal) dimensions.

Plain Cylindrical Bearings

ALL DIMENSIONS IN INCHES
ORDER BY CATALOG NUMBER OR ITEM CODE

A	B	C	Catalog Number	Item Code
9/16 .565	3/4 .753	1/2	B912-4	34802
		3/4	B912-6	34804
		1	B912-8	34806
		1-1/2	B912-12	34808
	13/16 .815	1/2	B913-4	34810
		3/4	B913-6	34812
		1	B913-8	34814
		1-1/4	B913-10	34816
		1-1/2	B913-12	34818
5/8 .627	3/4 .753	1/2	B1012-4	34820
		5/8	B1012-5	34822
		3/4	B1012-6	34824
		7/8	B1012-7	34826
		1	B1012-8	34828
		1-1/8	B1012-9	34830
		1-1/4	B1012-10	34834
		1-1/2	B1012-12	34832
	13/16 .815	1/2	B1013-4	34836
		5/8	B1013-5	34838
		3/4	B1013-6	34840
		7/8	B1013-7	35400
		1	B1013-8	34842
		1-1/4	B1013-10	34844
		1-1/2	B1013-12	34846
		2	B1013-16	34848
	7/8 .878	5/8	B1014-5	34850
		3/4	B1014-6	34852
		7/8	B1014-7	34854
		1	B1014-8	34856
		1-1/4	B1014-10	34858
		1-1/2	B1014-12	34860
		1-3/4	B1014-14	34862
		2	B1014-16	34864
5/8 .628	1 1.003	1/2	B1016-4	34866
		5/8	B1016-5	34868
		3/4	B1016-6	34870
		7/8	B1016-7	34872
		1	B1016-8	34874
		1-1/4	B1016-10	34876
		1-1/2	B1016-12	34878
		1-3/4	B1016-14	34880
		2	B1016-16	34882
11/16 .690	7/8 .878	3/4	B1114-6	34884
		1	B1114-8	34886
		1-1/4	B1114-10	34888
		1-1/2	B1114-12	34890
		1-3/4	B1114-14	34892
		2	B1114-16	34894
3/4 .753	7/8 .878	1/2	B1214-4	34896
		5/8	B1214-5	34898
		3/4	B1214-6	34900
		7/8	B1214-7	34902
		1	B1214-8	34904
		1-1/4	B1214-10	34906
		1-1/2	B1214-12	34908
		1-5/8	B1214-13	34910
	15/16 .9405	1/2	B1215-4	34912
		5/8	B1215-5	34914
		3/4	B1215-6	34916
		7/8	B1215-7	34918
		1	B1215-8	34920
		1-1/4	B1215-10	34922
		1-1/2	B1215-12	34924
		1-3/4	B1215-14	34926
		2	B1215-16	34928
	1 1.003	1/2	B1216-4	34930
		5/8	B1216-5	34932
		3/4	B1216-6	34934
		7/8	B1216-7	34936
		1	B1216-8	34938
		1-1/8	B1216-9	34940
		1-1/4	B1216-10	34942
		1-1/2	B1216-12	34944
		1-3/4	B1216-14	34946
		2	B1216-16	34948
		2-1/2	B1216-20	34950

A	B	C	Catalog Number	Item Code
3/4 .753	1-1/8 1.128	1/2	B1218-4	34952
		3/4	B1218-6	34954
		1	B1218-8	34956
		1-1/4	B1218-10	34958
		1-1/2	B1218-12	34960
		1-3/4	B1218-14	34962
		2	B1218-16	34964
	1-1/4 1.253	3/4	B1220-6	34966
		1	B1220-8	34968
		1-1/4	B1220-10	34970
		1-1/2	B1220-12	34972
		2	B1220-16	34976
13/16 .8155	1 1.003	3/4	B1316-6	34978
		1	B1316-8	34980
		1-1/4	B1316-10	34982
		1-1/2	B1316-12	34984
		1-3/4	B1316-14	34986
		2	B1316-16	34988
7/8 .878	1 1.003	3/4	B1416-6	34990
		7/8	B1416-7	34992
		1	B1416-8	34994
		1-1/4	B1416-10	34996
		1-1/2	B1416-12	34998
	1-1/8 1.128	3/4	B1418-6	35000
		7/8	B1418-7	35002
		1	B1418-8	35004
		1-1/8	B1418-9	35006
		1-1/4	B1418-10	35008
		1-3/8	B1418-11	35010
		1-1/2	B1418-12	35012
		1-3/4	B1418-14	35014
		2	B1418-16	35016
		2-1/2	B1418-20	35018
	1-1/4 1.253	3/4	B1420-6	35020
		1	B1420-8	35022
		1-1/4	B1420-10	35024
		1-1/2	B1420-12	35026
		2	B1420-16	35028
15/16 .9405	1-3/16 1.1905	3/4	B1519-6	35030
		1	B1519-8	35032
		1-1/4	B1519-10	35034
		1-1/2	B1519-12	35036
		2	B1519-16	35038
	1-1/4 1.253	3/4	B1520-6	35040
		1	B1520-8	35042
		1-1/4	B1520-10	35044
		1-3/4	B1520-14	35048
		2	B1520-16	35050
1 1.004	1-1/8 1.128	3/4	B1618-6	35052
		1	B1618-8	35054
		1-1/4	B1618-10	35056
		1-1/2	B1618-12	35058
		1-3/4	B1618-14	35060
		2	B1618-16	35062
	1-3/16 1.190	3/4	B1619-6	13593
		1	B1619-8	13595
		1-1/4	B1619-10	13597
		1-1/2	B1619-12	13599
		1-3/4	B1619-14	13601
		2	B1619-16	13603
	1-1/4 1.253	3/4	B1620-6	35064
		7/8	B1620-7	35066
		1	B1620-8	35068
		1-1/4	B1620-10	35070
		1-3/8	B1620-11	35072
		1-1/2	B1620-12	35074
		1-3/4	B1620-14	35076
		2	B1620-16	35078
		2-1/4	B1620-18	35080
		2-1/2	B1620-20	35082
		3	B1620-24	35084
	1-5/16 1.3155	1	B1621-8	35086
		1-1/4	B1621-10	35088
		1-1/2	B1621-12	35090
		1-3/4	B1621-14	35092
		2	B1621-16	35094
		2-1/2	B1621-20	35096
		3	B1621-24	35098

On A and B dimensions, tolerances apply to actual (decimal) dimensions.



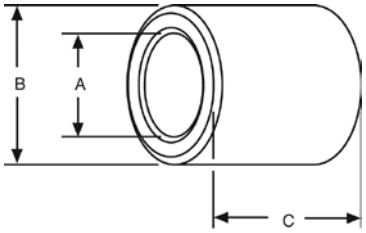

STANDARD TOLERANCES

DIMENSIONS		TOLERANCE
A	1/8 – 1 1/2	+.000, – .001
	1 3/4 – 2 1/2	+.000, – .0015
B	2 3/4 – 3 1/2	+.000, – .002
C	1/8 – 1 1/2	± .005
	1 3/4 – 3	± .0075
	4	± .010

CONCENTRICITY

DIMENSIONS		TOLERANCE
A	1/8 – 1 1/2	.003
	1 5/8 – 3	.004
	3 1/4 – 3 1/2	.005

Prices on unlisted sizes and other Boston Gear powder metal parts provided on request.

BOST-BRONZ Oil-Impregnated Sintered Bronze Bearings

Plain Cylindrical Bearings

F



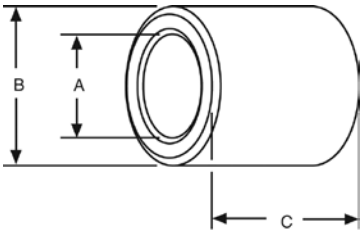

STANDARD TOLERANCES

DIMENSIONS		TOLERANCE
A	1/8 – 1 1/2	+.000, – .001
	1 3/4 – 2 1/2	+.000, – .0015
B	2 3/4 – 3 1/2	+.000, – .002
C	1/8 – 11/2	± .005
	1 3/4 – 3	± .0075
	4	± .010

CONCENTRICITY

DIMENSIONS		TOLERANCE
A	1/-8 – 1 1/2	.003
	1 5/8 – 3	.004
	3 1/4 – 3 1/2	.005

Prices on unlisted sizes and other Boston Gear powder metal parts provided on request.

ALL DIMENSIONS IN INCHES
ORDER BY CATALOG NUMBER OR ITEM CODE

A	B	C	Catalog Number	Item Code
1 1.003	1-3/8 1.378	1 1-1/4 1-1/2 1-3/4 2 2-1/2 3	B1622-8 B1622-10 B1622-12 B1622-14 B1622-16 B1622-20 B1622-24	35100 35102 35104 35106 35108 35110 35112
	1-1/2 1.503	1 1-1/2 2 2-1/2 3	B1624-8 B1624-12 B1624-16 B1624-20 B1624-24	35114 35118 35120 35122 35124
1-1/16 1.0655	1-5/16 1.3155	1 1-1/2 2 2-1/2	B1721-8 B1721-12 B1721-16 B1721-20	35126 35128 35130 35132
1-1/8 1.129	1-1/4 1.254	1 1-1/4 1-1/2	B1820-8 B1820-10 B1820-12	13605 13639 13641
	1-5/16 1.3155	1 1-1/4 1-1/2 2	B1821-8 B1821-10 B1821-12 B1821-16	35134 35136 35138 35140
	1-3/8 1.378	3/4 1 1-1/4 1-1/2 1-3/4 2 2-1/2 3	B1822-6 B1822-8 B1822-10 B1822-12 B1822-14 B1822-16 B1822-20 B1822-24	35142 35144 35146 35148 35150 35152 35154 35156
	1-1/2 1.503	1 1-1/2 2	B1824-8 B1824-12 B1824-16	35158 35160 35162
1-3/16 1.1905	1-7/16 1.441	1-1/4 2 2-1/2 3	B1923-10 B1923-16 B1923-20 B1923-24	35164 35166 35168 35170
	1-1/2 1.503	1 1-1/4 1-1/2 1-3/4 2 2-1/2 3	B1924-8 B1924-10 B1924-12 B1924-14 B1924-16 B1924-20 B1924-24	35172 35174 35176 35178 35180 35182 35184
1-1/4 1.254	1-1/2 1.503	1 1-1/8 1-1/4 1-3/8 1-1/2 1-5/8 1-3/4 2 2-1/4 2-1/2 3	B2024-8 B2024-9 B2024-10 B2024-11 B2024-12 B2024-13 B2024-14 B2024-16 B2024-18 B2024-20 B2024-24	35186 35188 35190 35192 35194 35196 35198 35200 35202 35204 35206
	1-5/8 1.628	1 1-1/4 1-1/2 1-3/4 2 2-1/2 3	B2026-8 B2026-10 B2026-12 B2026-14 B2026-16 B2026-20 B2026-24	35208 35210 35212 35214 35216 35218 35220
1-5/16 1.3155	1-5/8 1.628	1-1/4 1-1/2 2 2-1/2 3	B2126-10 B2126-12 B2126-16 B2126-20 B2126-24	35222 35224 35226 35228 35230
1-3/8 1.378	1-5/8 1.628	1-1/2 2 2-1/2 3	B2226-12 B2226-16 B2226-20 B2226-24	35234 35236 35238 35240
	1-3/4 1.753	1 1-1/2 2 2-1/2 3	B2228-8 B2228-12 B2228-16 B2228-20 B2228-24	35242 35244 35246 35248 35250

A	B	C	Catalog Number	Item Code
1-7/16 1.4405	1-3/4 1.753	1 1-1/4 1-1/2 1-3/4 2 2-1/2 3	B2328-8 B2328-10 B2328-12 B2328-14 B2328-16 B2328-20 B2328-24	35252 35254 35256 35258 35260 35262 35264
1-1/2 1.503	1-3/4 1.753	1 1-1/4 1-1/2 2 2-1/2 3	B2428-8 B2428-10 B2428-12 B2428-16 B2428-20 B2428-24	35266 35268 35270 G00602 35274 35276
	1-13/16 1.816	1-1/2 3	B2429-12 B2429-24	35278 35280
	1-7/8 1.878	1-1/2 2 2-1/2 3	B2430-12 B2430-16 B2430-20 B2430-24	35282 35284 35286 35288
	2 2.004	1 1-1/2 2 2-1/2 3	B2432-8 B2432-12 B2432-16 B2432-20 B2432-24	35290 35292 35294 35296 35298
1-5/8 1.628	1-7/8 1.878	1-1/4 1-1/2 2 2-1/2 3	B2630-10 B2630-12 B2630-16 B2630-20 B2630-24	35300 35302 35304 35306 35308
	2 2.004	1 2 3	B2632-8 B2632-16 B2632-24	35310 35312 35314
1-11/16 1.6905	2-3/16 2.191	1-3/4 2 3 4	B2735-14 B2735-16 B2735-24 B2735-32	35316 35318 35320 35322
1-3/4 1.753	2 2.004	2 2-1/2 3	B2832-16 B2832-20 B2832-24	35324 35326 35328
	2-1/8 2.129	1-1/2 2 3	B2834-12 B2834-16 B2834-24	35330 35332 35334
1-15/16 1.9405	2-5/16 2.316	2 3 4	B3137-16 B3137-24 B3137-32	35336 35338 35340
2 2.003	2-3/8 2.379	1-3/4 2 2-3/4 3 4	B3238-14 B3238-16 B3238-22 B3238-24 B3238-32	35342 35344 35346 35348 35350
	2-1/2 2.504	1 2 3	B3240-8 B3240-16 B3240-24	35352 35354 35356
2-1/4 2.254	2-3/4 2.754	2 3	B3644-16 B3644-24	35364 35366
2-3/8 2.379	2-3/4 2.754	2 3 4	B3844-16 B3844-24 B3844-32	35370 35372 35374
2-1/2 2.504	3 3.005	2 3 4	B4048-16 B4048-24 B4048-32	35382 35384 35386
2-3/4 2.755	3-1/4 3.255	2 3 4	B4452-16 B4452-24 B4452-32	35388 35390 35392
3 3.004	3-1/2 3.505	2 3 4	B4856-16 B4856-24 B4856-32	35394 35396 35398

On A and B dimensions, tolerances apply to actual (decimal) dimensions.

BOST-BRONZ Oil-Impregnated Sintered Bronze Bearings

Flanged Type

ALL DIMENSIONS IN INCHES
ORDER BY CATALOG NUMBER OR ITEM CODE

A	B	C	D	E	Catalog Number	Item Code
1/8 .127	5/16 .315	1/4 3/8	.375	3/64	FB25-2 FB25-3	35516 35518
3/16 .189	5/16 .3145	1/8 1/4 3/8	.375	3/64	FB35-1 FB35-2 FB35-3	35520 35522 35524
1/4 .252	3/8 .377	1/4 3/8 1/2 5/8 3/4	.500	3/64	FB46-2 FB46-3 FB46-4 FB46-5 FB46-6	35526 35528 35530 35532 35534
5/16 .314	3/8 .377	3/8	.500	3/64	FB56-3	35536
	7/16 .439	3/8 1/2 5/8 3/4 7/8 1	.625	3/32	FB57-3 FB57-4 FB57-5 FB57-6 FB57-7 FB57-8	35538 69191 69192 35540 69193 69194
	1/2 .502	3/8 1/2 5/8	.688	3/32	FB58-3 FB58-4 FB58-5	35542 35544 35546
3/8 .377	1/2 .502	3/8 13/32 1/2 5/8 3/4 7/8 1 1-1/4	.688	3/32	FB68-3 FB68-3 1/4 FB68-4 FB68-5 FB68-6 FB68-7 FB68-8 FB68-10	35548 35550 35552 35554 35556 69195 35558 35560
	9/16 .5645	1/2 3/4 1-1/4	.750	1/8	FB69-4 FB69-6 FB69-10	69196 35562 35564
	5/8 .627	3/8 1/2 5/8 3/4 1 1-1/4	.875	1/8	FB610-3 FB610-4 FB610-5 FB610-6 FB610-8 FB610-10	69197 35566 39198 35568 69199 35570
	3/4 .753	1/2	1.000	1/8	FB612-4	35572
7/16 .439	9/16 .565	1/2 5/8 3/4	.688	1/16	FB79-4 FB79-5 FB79-6	13611 13613 13615
	5/8 .628	5/8 3/4 1-1/4	.875	1/8	FB710-5 FB710-6 FB710-10	35574 69200 35576
1/2 .502	5/8 .628	1/2 5/8 3/4 7/8 1 1-1/4 1-1/2 1-3/4	.875	1/8	FB810-4 FB810-5 FB810-6 FB810-7 FB810-8 FB810-10 FB810-12 FB810-14	35578 35580 35582 69201 35584 35586 35588 35590
	11/16 .690	1/2 5/8 3/4	.938	1/8	FB811-4 FB811-5 FB811-6	35592 69202 35594
	3/4 .753	1/2 5/8 3/4 7/8 1 1-1/4 1-1/2	1.000	1/8	FB812-4 FB812-5 FB812-6 FB812-7 FB812-8 FB812-10 FB812-12	35596 69203 35598 35600 35602 35604 35606
9/16 .565	3/4 .753	1/2 3/4 1	1.000	1/8	FB912-4 FB912-6 FB912-8	69204 69205 35608

On A and B dimensions, tolerances apply to actual (decimal) dimensions.

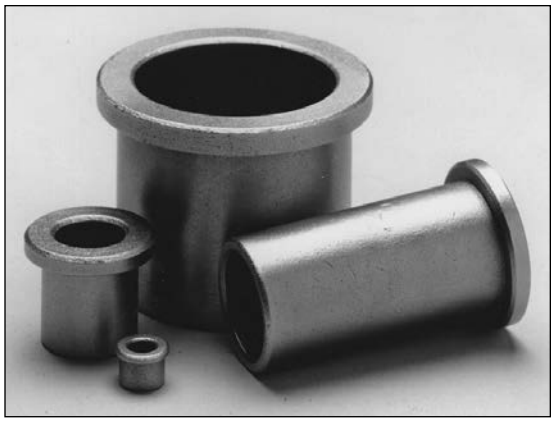

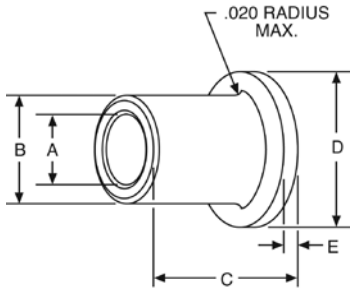

STANDARD TOLERANCES

DIMENSIONS		TOLERANCE
A	1/8 – 1 1/2	+.000, – .001
	1 3/4 – 2 1/2	+.000, – .0015
B	2 3/4 – 3 1/2	+.000, – .002
C	1/8 – 1 1/2	± .005
	1 3/4 – 3	± .0075
	4	± .010
D	3/8 – 1 1/4	±.005
	1 3/8 – 2 1/2	±.010
	4	±.015
E	3/8 – 1 1/4	±.0025
	1 3/8 – 2 1/2	±.005
	4	±.010

CONCENTRICITY

DIMENSIONS		TOLERANCE
A	1/8 - 1 1/2	.003
	1 5/8 - 3	.004
	3 1/4 - 3 1/2	.005

Prices on unlisted sizes and other Boston Gear powder metal parts provided on request.

BOST-BRONZ Oil-Impregnated Sintered Bronze Bearings

Flanged Type

F

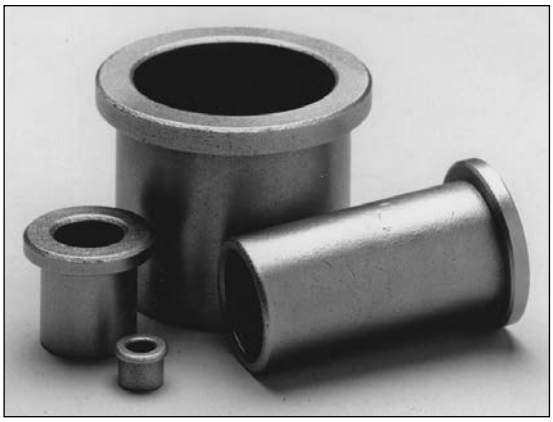

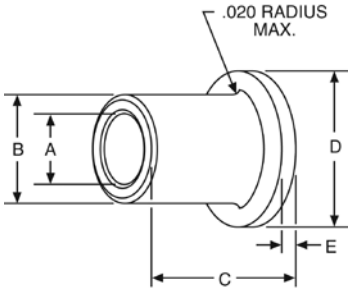

STANDARD TOLERANCES

DIMENSIONS		TOLERANCE
A	1/8 – 1 1/2	+.000, – .001
	1 3/4 – 2 1/2	+.000, – .0015
B	2 3/4 – 3 1/2	+.000, – .002
C	1/8 – 1 1/2	± .005
	1 3/4 – 3	± .0075
	4	± .010
D	3/8 – 1 1/4	± .005
	1 3/8 – 2 1/2	± .010
	4	± .015
E	3/8 – 1 1/4	± .0025
	1 3/8 – 2 1/2	± .005
	4	± .010

CONCENTRICITY

DIMENSIONS		TOLERANCE
A	1/8 – 1 1/2	.003
	1 5/8 – 3	.004
	3 1/4 – 3 1/2	.005

Prices on unlisted sizes and other Boston Gear powder metal parts provided on request.

ALL DIMENSIONS IN INCHES
ORDER BY CATALOG NUMBER OR ITEM CODE

A	B	C	D	E	Catalog Number	Item Code
5/8 .626	3/4 .753	1/2 5/8 3/4 1 1-1/4	1.000	1/8	FB1012-4 FB1012-5 FB1012-6 FB1012-8 FB1012-10	35610 35612 35614 35616 35618
5/8 .627	13/16 .815	5/8 3/4 1 1-1/4 1-7/16 1-1/2 2	1.063	5/32	FB1013-5 FB1013-6 FB1013-8 FB1013-10 FB1013-11 1/2 FB1013-12 FB1013-16	69206 35620 35622 35624 35626 35628 35630
	7/8 .878	5/8 3/4 1 1-3/4	1.125	5/32	FB1014-5 FB1014-6 FB1014-8 FB1014-14	69207 35632 35634 35636
	1 1.003	3/4 1	1.250	5/32	FB1016-6 FB1016-8	69208 35638
3/4 .752	7/8 .878	3/4 1 1-1/4	1.125	5/32	FB1214-6 FB1214-8 FB1214-10	35644 35646 69209
	15/16 .940	1 1-1/4 1-1/2	1.188	5/32	FB1215-8 FB1215-10 FB1215-12	35648 69213 35650
	1 1.003	5/8 3/4 1 1-1/4 1-1/2 2	1.250	5/32	FB1216-5 FB1216-6 FB1216-8 FB1216-10 FB1216-12 FB1216-16	69214 35652 35654 35656 35658 35660
7/8 .877	1 1.003	3/4 1 1-1/4	1.250	5/32	FB1416-6 FB1416-8 FB1416-10	35662 69210 35664
	1-1/8 1.128	1 1-1/4 1-1/2	1.375	5/32	FB1418-8 FB1418-10 FB1418-12	35666 69211 35668
1 1.002	1-1/4 1.253	3/4 1 1-1/4 1-1/2 2	1.500	3/16	FB1620-6 FB1620-8 FB1620-10 FB1620-12 FB1620-16	35672 35674 35676 35678 35680
	1-3/8 1.378	1 1-1/2 1-3/4	1.625	3/16	FB1622-8 FB1622-12 FB1622-14	35682 69215 35684
1-1/8 1.127	1-3/8 1.377	3/4 1 1-1/4	1.750	1/8	FB1822-6 FB1822-8 FB1822-10	13617 13619 13621
1-1/4 1.252	1-1/2 1.503	1 1-1/4 1-1/2	1.750	3/16	FB2024-8 FB2024-10 FB2024-12	69216 35686 69217
1-3/8 1.377	1-5/8 1.628	3/4 1	2,000	1/8	FB2226-6 FB2226-8	13623 13625
1-1/2 1.503	1-3/4 1.754	1-1/2	2.063	3/16	FB2428-12	35688
2 2.003	2-1/4 2.254	3/4 1 1-1/4	2.500	1/8	FB3236-6 FB3236-8 FB3236-10	13627 13629 13631
2-3/4 2.752	3-1/4 3.255	1-1/2	4.000	3/16	FB4452-12	13635

On A and B dimensions, tolerances apply to actual (decimal) dimensions.

BOST-BRONZ Oil-Impregnated Sintered Bronze Bearings

Thrust Type

ALL DIMENSIONS IN INCHES
ORDER BY CATALOG NUMBER OR ITEM CODE

A	B	C	Catalog Number	Item Code
1/4 .255	7/16 .4375	1/16	TB47	13515
	1/2 .500	1/16	TB48	13517
	5/8 .625	1/16	TB410	35766
5/16 .315	5/8 .625	1/16	TB510	13519
	3/4 .750	1/16	TB512	35768
3/8 .385	5/8 .625	1/16	TB610	13521
3/8 .380	3/4 .750	1/32	TB612	35770
	3/4 .750	1/8	TB612-2	13523
7/16 .440	3/4 .750	1/16	TB712	69218
1/2 .505	3/4 .750	1/16	TB812	35772
1/2 .505	7/8 .875	3/16	TB814	35774
1/2 .510	1 1.000	1/16	TB816	35776
9/16 .565	1-1/4 1.250	1/8	TB920	35778
5/8 .628	1 1.000	1/8	TB1016	35780
	1-3/16 1.187	3/32	TB1019	35782
	1-1/4 1.250	1/8	TB1020	69219
5/8 .6265	1-1/2 1.500	1/8	TB1024	69220
3/4 .753	1-1/4 1.250	1/8	TB1220	69221
	1-3/8 1.375	1/8	TB1222	69222
3/4 .765	1-9/16 1.562	3/32	TB1225	35784
	1-3/4 1.750	1/8	TB1228	35786
7/8 .8905	1-1/2 1.500	1/8	TB1424	35788
7/8 .880	2 2.000	1/8	TB1432	13525
7/8 .8905	2-1/8 2.125	1/8	TB1434	35790
1 1.003	1-1/2 1.500	1/8	TB1624	35792
		3/16	TB1624-3	13527
1 1.0155	1-5/8 1.625	1/4	TB1626-4	13529
1 1.0120	1-3/4 1.750	1/8	TB1628	13531
1 1.016	2 2.000	1/8	TB1632	35794
1 1.0155	2-7/8 2.875	1/8	TB1646	13533
1-1/8 1.140	1-7/8 1.875	1/8	TB1830	13535
1-1/4 1.253	1-3/4 1.750	1/8	TB2028	35796
1-1/4 1.265	2 2.000	1/8	TB2032	13537
	2-3/8 2.375	1/8	TB2038	13539
	3-5/16 3.312	1/8	TB2053	13541
1-3/8 1.379	1-15/16 1.940	1/8	TB2231	13543
1-1/2 1.503	2 2.000	1/8	TB2432	13545
1-1/2 1.505	2-1/2 2.505	1/8	TB2440	13547
1-1/2 1.510	3-1/2 3.500	3/16	TB2456	35798
1-9/16 1.578	2-7/16 2.4375	1/8	TB2539	13549
1-3/4 1.765	2-5/8 2.625	1/8	TB2842	13551
2 2.011	3 3.000	1/4	TB3248	13553
2 2.031	2-5/8 2.625	3/16	TB3258	13555
2-1/16 2.062	4 4.000	1/8	TB3364	13557
2-1/2 2.502	3-1/4 3.250	1/8	TB4052	13559

On A and B dimensions, tolerances apply to actual (decimal) dimensions.



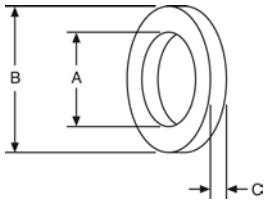

STANDARD TOLERANCES

DIMENSIONS		TOLERANCE
A	1/4 – 1 1/4	±.010
	1 3/8 –2 1/2	±.015
B	7/16 – 1 1/2	±.010
	1 9/16 – 3	±.015
	3 1/4 – 4	±.020
C	All	± .0025

BOST-BRONZ is stocked in this convenient Plate form for ease in machining to required bearing size or shape — at your service for all emergencies.

Plate Stock

ALL DIMENSIONS IN INCHES
ORDER BY CATALOG NUMBER OR ITEM CODE

A	B	C	Catalog Number	Item Code
1/8 3/16 1/4 5/16	5	6	PB5602 PB5603 PB5604 PB5605	35692 35694 35696 35698
3/8 1/2 5/8 3/4 1	5	6	PB5606 PB5608 PB5610 PB5612 PB5616	35700 35702 35704 35706 35708
3/16 1/4	5	8	PB5803 PB5804	35710 35712

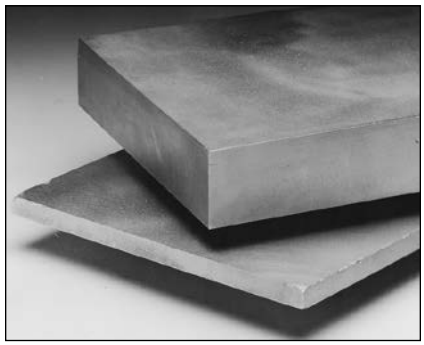

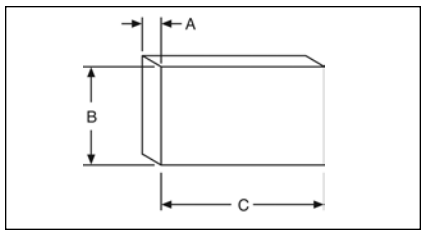

STANDARD TOLERANCES

DIMENSIONS		TOLERANCE
A	All	±.010 to –.005

Keep **BOST-BRONZ** plate stock on hand for: Breakdowns – maintenance and repairs – Producing small lots of special sizes – Experimental and development work.

BOST-BRONZ Oil-Impregnated Sintered Bronze Bearings

F

Cored Bars

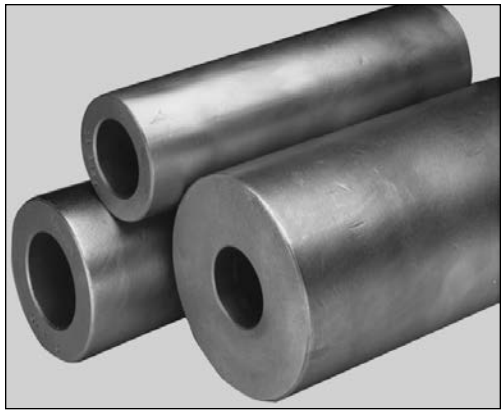

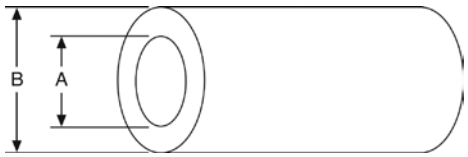

BOST-BRONZ is stocked in these convenient Bar forms for ease in machining to required bearing size or shape — at your service for all emergencies.

ALL DIMENSIONS IN INCHES
ORDER BY CATALOG NUMBER OR ITEM CODE

A	B	Catalog Number	Item Code
1/2	1	CB816	35402
	1-1/4	CB820	35404
	1-1/2	CB824	35406
5/8	1	CB1016	35408
	1-1/4	CB1020	35410
	1-3/8	CB1022	35412
	1-1/2	CB1024	35414
	1-3/4	CB1028	35416
3/4	1-1/4	CB1220	35418
	1-1/2	CB1224	35420
	1-3/4	CB1228	35422
	2	CB1232	35424
	2-1/2	CB1240	35426
7/8	1-3/8	CB1422	35428
1	1-1/2	CB1624	35430
	1-3/4	CB1628	35432
	2	CB1632	35434
	2-1/4	CB1636	35436
	2-1/2	CB1640	35438
	3	CB1648	35440
1-1/4	1-3/4	CB2028	35442
	2	CB2032	35444
	2-1/4	CB2036	35446
	2-1/2	CB2040	35448
	3	CB2048	35450
1-3/8	2	CB2232	35452
1-1/2	2	CB2432	35456
	2-1/4	CB2436	35458
	2-1/2	CB2440	35460
	3	CB2448	35462
	3-1/2	CB2456	35464
1-3/4	2-1/4	CB2836	35466
	2-1/2	CB2840	35468
	2-3/4	CB2844	35470
	3	CB2848	35472
	3-1/2	CB2856	35474
2	2-3/4	CB3244	35476
	3	CB3248	35478
	3-1/4	CB3252	35480
	4	CB3264	35482
	4-1/2	CB3272	35484
	5	CB3280	35486
2-1/4	3	CB3648	35488
	3-1/2	CB3656	35490
	3-3/4	CB3660	35492
2-3/8	3	CB3848	35494
2-1/2	3-1/2	CB4056	35496
3	3-3/4	CB4860	35498
	4	CB4864	35500
	5	CB4880	35502
	6	CB4896	35504
3-1/2	4-3/4	CB5676	35506
4	6	CB6496	35512
5	7	CB80112	35514

All bars are 6 1/2" long.

STANDARD TOLERANCES

DIMENSIONS		TOLERANCE
A	All	–1/8"
B	All	+1/8"

Solid Bars



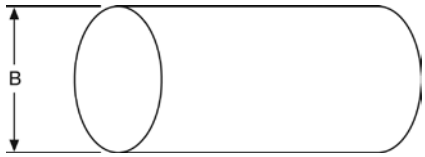

ALL DIMENSIONS IN INCHES
ORDER BY CATALOG NUMBER OR ITEM CODE

B	Length	Catalog Number	Item Code
1/4	2	SB4	35714
3/8	3	SB6	35716
1/2	6-1/2	SB8	35718
5/8		SB10	35720
3/4		SB12	35722
7/8		SB14	35724
1	6-1/2	SB16	35726
1-1/8		SB18	35728
1-1/4		SB20	35730
1-3/8		SB22	35732
1-1/2	6-1/2	SB24	35734
1-5/8		SB26	35736
1-3/4		SB28	35738
2	6-1/2	SB32	35742
2-1/4		SB36	35744
2-1/2		SB40	35746
3		SB48	35748
3-1/2	6-1/2	SB56	35750
4		SB64	35752
4-1/2		SB72	35754
5		SB80	35756
5-1/2	6-1/2	SB88	35758
6		SB96	35760
7		SB112	35762

STANDARD TOLERANCES

DIMENSIONS		TOLERANCE
B	All	+ 1/8"

BEAR-N-BRONZE 660 Cast Bronze Bearings



⚠ WARNING: Cancer and Reproductive Harm – www.P65Warnings.ca.gov

BEAR-N-BRONZ is Boston Gear's general purpose cast, solid bronze bearing material. It is a high grade, leaded-tin bronze, having good hardness, strength, wear-resistance, and exceptional anti-friction qualities. It is particularly suited for moderate to heavy loads at normal to relatively high speeds.

Quality

BEAR-N-BRONZ is chemically and metallurgically tested to assure conformance to specifications. All parts are rigidly inspected to assure freedom from porosity and conformance to dimensional tolerances.

Adaptability

BEAR-N-BRONZ bearings are completely machined to close tolerances permitting wider housing-bore tolerances. BEAR-N-BRONZ bars are machined all over.

Composition (%)		Avg. Tensile Strength (Lbs. Per Sq. In.)	Avg. Yield Strength 0.2% Offset (Lbs. Per Sq. In.)	Elongation in Two Inch (%)	Brinnell Hardness (500 Kg Load)
Copper (Cu)	83	35,000	20,000	15	60
Tin (Sn)	7	Bear-N-Bronz conforms to SAE CA932 (660)			
Lead (Pb)	7	and ASTM B584-78 (alloy C93200)			
Zinc (Zn)	3	specifications.			

Special Compositions

In addition to our standard BEAR-N-BRONZ (SAE CA 932) material, many special compositions can be furnished on a made-to-order basis.

The Chemical compositions and physical properties of some of the more popular are listed.

Grade	Equivalent S.A.E. Number	Composition (%)	Average Yield Strength 0.2% Offset (Lbs. Per Sq. In.)	Average Tensile Strength (Lbs. Per Sq. In.)	Elongation in Two Inch (%)	Brinnell Hardness (500 Kg Load)
206 Leaded Gun Metal	CA927	Copper (Cu) 88 Tin (Sn) 10 Lead (Pb) 2	40,000	20,000	25	70
210 Gun Metal	CA905	Copper (Cu) 88 Tin (Sn) 10 Zinc (Zn) 2	45,000	22,000	25	65
305 Phosphor Bronze	CA937	Copper (Cu) 80 Tin (Sn) 10 Lead (Pb) 10	35,000	18,000	20	63
319 Semi-Plastic Bronze	CA938	Copper (Cu) 78 Tin (Sn) 7 Lead (Pb) 15	30,000	17,000	15	55

Selection

In general, sleeve bearings should be selected with a length of one to two times the shaft diameter and an O.D. approximately 25% larger than the shaft diameter.

A general guide to determination of limiting load and velocity values for sleeve bearings has been established by the use of PV calculations. PV represents Pressure x Velocity, for example 100 psi x 20 fpm yields a PV of 2000.

Maximum PV value for BEAR-N-BRONZ bearings: 75,000.

For complete selection and application information, see Engineering Section, Pages 174-182.

BEAR-N-BRONZE 660 Cast Bronze Bearings

Plain Cylindrical Bearings

F



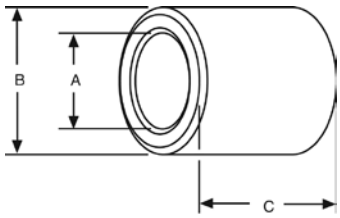

STANDARD TOLERANCES

DIMENSIONS		TOLERANCE
A	3/16 – 3 3-1/4 – 4-1/2	±.001 ±.0015
B	5/16 – 3 3-1/8 – 5	+.002 to +.003 +.003 to +.005
C	All	±.005

STANDARD CONCENTRICITY

DIMENSIONS		T.I.R. (A TO B)
A	All	.003

For Oil Grooves see Page 179.

ALL DIMENSIONS IN INCHES
ORDER BY CATALOG NUMBER OR ITEM CODE

A	B	C	Catalog Number	Item Code
3/16	5/16	1/2	M35-4	31308
		3/4	M35-6	31310
		1	M35-8	31312
1/4	3/8	3/4	M46-6	31314
		1	M46-8	31316
		1-1/4	M46-10	31318
	7/16	3/4	M47-6	31320
		1	M47-8	31322
		1-1/4	M47-10	31324
5/16	7/16	3/4	M57-6	31326
		1	M57-8	31328
		1-1/4	M57-10	31330
	1/2	3/4	M58-6	31332
		1	M58-8	31334
		1-1/4	M58-10	31336
3/8	1/2	3/4	M68-6	31338
		1	M68-8	31340
		1-1/4	M68-10	31342
		1-1/2	M68-12	31344
	9/16	3/4	M69-6	31346
		1	M69-8	31348
		1-1/4	M69-10	31350
	5/8	3/4	M610-6	31362
		1	M610-8	31364
		1-1/4	M610-10	31366
		1-1/2	M610-12	31368
7/16	9/16	1	M79-8	31352
		1-1/4	M79-10	31354
		1-1/2	M79-12	31356
	5/8	1	M710-8	31370
		1-1/4	M710-10	31372
		1-1/2	M710-12	31374
		2	M710-16	31376
	11/16	1-1/2	M711-12	31378
	3/4	1	M712-8	31380
		1-1/4	M712-10	31382
		1-1/2	M712-12	31384
	13/16	1-1/2	M713-12	31386
1/2	5/8	5/8	M810-5	31388
		3/4	M810-6	31390
		7/8	M810-7	31392
		1	M810-8	31394
		1-1/4	M810-10	31396
		1-3/8	M810-11	31398
		1-1/2	M810-12	31400
		1-3/4	M810-14	31402
		2	M810-16	31404
		2-1/4	M810-18	31406
	11/16	3/4	M811-6	31408
		1	M811-8	31410
		1-1/4	M811-10	31412
		1-1/2	M811-12	31414
		1-3/4	M811-14	31416
		2	M811-16	31418
		2-1/4	M811-18	31420
		2-1/2	M811-20	31422
	3/4	3/4	M812-6	31424
		1	M812-8	31426
		1-1/4	M812-10	31428
		1-1/2	M812-12	31430
		1-3/4	M812-14	31432
		2	M812-16	31434
		2-1/4	M812-18	31436
		2-1/2	M812-20	31438
		2-3/4	M812-22	31440
	13/16	1	M813-8	31442
		1-1/2	M813-12	31444
		2-1/4	M813-18	31446
	7/8	1	M814-8	31448
		1-1/4	M814-10	31450
		1-1/2	M814-12	31452
		1-3/4	M814-14	31454
		2	M814-16	31456
	1	1	M816-8	31458
1/2	1	1-1/2	M816-12	31460
		2	M816-16	31462
		2-1/4	M816-18	31464
9/16	11/16	1	M911-8	31466
		1-1/4	M911-10	31468
		1-1/2	M911-12	31470
		1-3/4	M911-14	31472
		2	M911-16	31474
		2-1/4	M911-18	31476
	3/4	1	M912-8	31480
		1-1/4	M912-10	31482
		1-1/2	M912-12	31484
		1-3/4	M912-14	31486
		2	M912-16	31488
		2-1/2	M912-20	31492
	13/16	1	M913-8	31494
		1-1/4	M913-10	31496
		1-1/2	M913-12	31498
		1-3/4	M913-14	31500
		2	M913-16	31502
	7/8	1	M914-8	31506
		1-1/2	M914-12	31508
		2	M914-16	31510
5/8	3/4	1	M1012-8	31512
		1-1/8	M1012-9	31514
		1-1/4	M1012-10	31516
		1-1/2	M1012-12	31518
		1-3/4	M1012-14	31520
		2	M1012-16	31522
		2-1/4	M1012-18	31524
		2-1/2	M1012-20	31526
	13/16	1	M1013-8	31528
		1-1/4	M1013-10	31530
		1-1/2	M1013-12	31532
		1-3/4	M1013-14	31534
		2	M1013-16	31536
		2-1/4	M1013-18	31538
		2-1/2	M1013-20	31540
	7/8	3/4	M1014-6	31542
		1	M1014-8	31544
		1-1/4	M1014-10	31548
		1-1/2	M1014-12	31550
		1-3/4	M1014-14	31552
		2	M1014-16	31554
		2-1/4	M1014-18	31556
		2-1/2	M1014-20	31558
		3	M1014-24	31560
	15/16	1	M1015-8	31562
		1-1/2	M1015-12	31564
		2-1/2	M1015-20	31568
	1	1	M1016-8	31570
		1-1/2	M1016-12	31572
		2	M1016-16	31574
		2-1/4	M1016-18	31576
		2-1/2	M1016-20	31578
		3	M1016-24	31580
	1-1/8	1-1/2	M1018-12	31582
		2	M1018-16	31584
		2-1/4	M1018-18	31586
11/16	13/16	1	M1113-8	31588
		1-1/2	M1113-12	31592
		1-3/4	M1113-14	31594
		2	M1113-16	31596
	7/8	1	M1114-8	31600
		1-1/4	M1114-10	31602
		1-1/2	M1114-12	31604
		2	M1114-16	31608
		2-1/2	M1114-20	31612
	15/16	1	M1115-8	31614
		1-1/4	M1115-10	31616
		1-1/2	M1115-12	31618
		2-1/2	M1115-20	31626
	1	1-1/4	M1116-10	31628
		2-1/4	M1116-18	31634
		2-1/2	M1116-20	31636

Plain Cylindrical Bearings

ALL DIMENSIONS IN INCHES
ORDER BY CATALOG NUMBER OR ITEM CODE

A	B	C	Catalog Number	Item Code
3/4	7/8	3/4	M1214-6	31640
		1	M1214-8	31642
		1-1/4	M1214-10	31644
		1-1/2	M1214-12	31646
		1-3/4	M1214-14	31648
		2	M1214-16	31650
		2-1/4	M1214-18	31652
		2-1/2	M1214-20	31654
	15/16	1	M1215-8	31656
		1-1/4	M1215-10	31658
		1-1/2	M1215-12	31662
		1-3/4	M1215-14	31664
		2	M1215-16	31666
		2-1/4	M1215-18	31668
		2-1/2	M1215-20	31670
		3	M1215-24	31674
	1	3/4	M1216-6	31676
		1	M1216-8	31678
		1-1/8	M1216-9	31680
		1-1/4	M1216-10	31682
		1-3/8	M1216-11	31684
		1-1/2	M1216-12	31686
		1-3/4	M1216-14	31688
		2	M1216-16	31690
		2-1/8	M1216-17	31692
		2-1/4	M1216-18	31694
		2-1/2	M1216-20	31696
		2-3/4	M1216-22	31698
		3	M1216-24	31700
		3-1/2	M1216-28	31702
	1-1/16	1	M1217-8	31704
		1-1/2	M1217-12	31706
		2	M1217-16	31708
		3	M1217-24	31714
	1-1/8	1	M1218-8	31716
		1-1/2	M1218-12	31718
		2	M1218-16	31720
		2-1/2	M1218-20	31724
		3	M1218-24	31726
	1-3/16	1-1/2	M1219-12	31728
		2	M1219-16	31730
	1-1/4	1-3/4	M1220-14	31734
		2	M1220-16	31736
		2-1/2	M1220-20	31740
		3	M1220-24	31742
13/16	15/16	1	M1315-8	31744
		1-1/2	M1315-12	31748
		2	M1315-16	31750
	1	1-1/2	M1316-12	31752
		2	M1316-16	31756
		2-1/2	M1316-20	31758
	1-1/16	1-1/2	M1317-12	31760
		2	M1317-16	31762
		2-3/4	M1317-22	31766
	1-1/8	1-1/2	M1318-12	31770
		2	M1318-16	31772
7/8	1	1	M1416-8	31788
		1-1/4	M1416-10	31790
		1-3/8	M1416-11	31792
		1-1/2	M1416-12	31794
		1-5/8	M1416-13	31796
		2	M1416-16	31798
	1-1/16	1	M1417-8	31800
		1-1/4	M1417-10	31802
		1-1/2	M1417-12	31804
		1-3/4	M1417-14	31806
		2	M1417-16	31808
		2-1/4	M1417-18	31810
		2-1/2	M1417-20	31812
		3	M1417-24	31816
	1-1/8	3/4	M1418-6	31818
		1	M1418-8	31820
		1-1/4	M1418-10	31822
		1-3/8	M1418-11	31824
7/8	1-1/8	1-1/2	M1418-12	31826
		1-3/4	M1418-14	31828
		2	M1418-16	31830
		2-1/4	M1418-18	31832
		2-1/2	M1418-20	31834
		3	M1418-24	31836
		3-1/4	M1418-26	31838
		3-1/2	M1418-28	31840
	1-3/16	1	M1419-8	31842
		3	M1419-24	31852
	1-1/4	1-1/2	M1420-12	31854
		1-3/4	M1420-14	31856
		2	M1420-16	31858
		2-1/4	M1420-18	31860
		2-1/2	M1420-20	31862
		3	M1420-24	31864
		3-1/2	M1420-28	31866
	1-3/8	1-1/2	M1422-12	31868
		2	M1422-16	31872
		2-1/2	M1422-20	31874
		3	M1422-24	31876
15/16	1-1/8	1-1/2	M1518-12	31878
		2	M1518-16	31880
	1-3/16	1-1/4	M1519-10	31884
		1-1/2	M1519-12	31886
		2	M1519-16	31888
		3	M1519-24	31894
	1-1/4	1	M1520-8	31896
		1-1/2	M1520-12	31898
		2	M1520-16	31900
		2-1/2	M1520-20	31902
		2-3/4	M1520-22	31904
	1-5/16	1-1/2	M1521-12	31906
		2	M1521-16	31910
1	1-1/8	1-3/8	M1618-11	31916
		1-1/2	M1618-12	31918
		1-3/4	M1618-14	31920
		2	M1618-16	31922
		2-1/2	M1618-20	31924
	1-3/16	7/8	M1619-7	31926
		1-1/4	M1619-10	31928
		1-1/2	M1619-12	31930
		1-3/4	M1619-14	31932
		2	M1619-16	31934
		2-1/2	M1619-20	31936
	1-1/4	3/4	M1620-6	31938
		1	M1620-8	31940
		1-1/8	M1620-9	31942
		1-1/4	M1620-10	31944
		1-3/8	M1620-11	31946
		1-1/2	M1620-12	31948
		1-5/8	M1620-13	31950
		1-3/4	M1620-14	31952
		2	M1620-16	31954
		2-1/4	M1620-18	31956
		2-1/2	M1620-20	31958
		2-3/4	M1620-22	31960
		3	M1620-24	31962
		4	M1620-32	31968
		4-1/2	M1620-36	31970
	1-5/16	1-1/2	M1621-12	31972
		2	M1621-16	31974
		2-1/4	M1621-18	31976
		2-1/2	M1621-20	31978
		3	M1621-24	31980
		3-1/2	M1621-28	31982
	1-3/8	1-1/4	M1622-10	31988
		1-1/2	M1622-12	31990
		1-3/4	M1622-14	31992
		2	M1622-16	31994



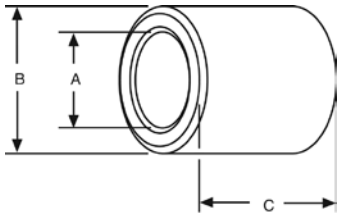

STANDARD TOLERANCES

DIMENSIONS		TOLERANCE
A	3/16 – 3	±.001
	3-1/4 – 4-1/2	±.0015
B	5/16 – 3	+.002 to +.003
	3-1/8 – 5	+.003 to +.005
C	All	±.005

STANDARD CONCENTRICITY

DIMENSIONS		T.I.R. (A TO B)
A	All	.003

For Oil Grooves see Page 179.

BEAR-N-BRONZE 660 Cast Bronze Bearings

Plain Cylindrical Bearings

F



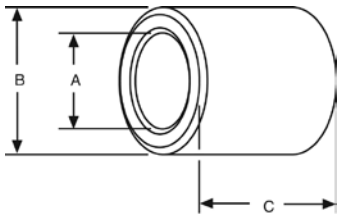

STANDARD TOLERANCES

DIMENSIONS		TOLERANCE
A	3/16 – 3	±.001
	3-1/4 – 4-1/2	±.0015
B	5/16 – 3	+.002 to +.003
	3-1/8 – 5	+.003 to +.005
C	All	±.005

STANDARD CONCENTRICITY

DIMENSIONS		T.I.R. (A TO B)
A	All	.003

For Oil Grooves see Page 179.

ALL DIMENSIONS IN INCHES
ORDER BY CATALOG NUMBER OR ITEM CODE

A	B	C	Catalog Number	Item Code
1	1-3/8	2-1/2	M1622-20	31996
		2-3/4	M1622-22	31998
		3	M1622-24	32000
		3-1/2	M1622-28	32004
		4	M1622-32	32006
		4-1/2	M1622-36	32008
	1-1/2	1-1/2	M1624-12	32010
		1-3/4	M1624-14	32012
		2	M1624-16	32014
		2-1/2	M1624-20	32016
		3	M1624-24	32018
		4	M1624-32	32020
	1-5/8	2	M1626-16	32022
		2-1/2	M1626-20	32024
		3	M1626-24	32026
		3-1/2	M1626-28	32028
	1-3/4	6-1/2	M1628-52	32030
	2	3	M1632-24	32032
		6-1/2	M1632-52	32034
1-1/16	1-5/16	1-1/2	M1721-12	32036
		2	M1721-16	32038
		2-1/2	M1721-20	32040
	1-7/16	2-1/2	M1723-20	32050
1-1/8	1-1/4	1-1/2	M1820-12	32062
		1-3/4	M1820-14	32064
		2	M1820-16	32066
	1-5/16	2-1/4	M1821-18	32068
		2-1/2	M1821-20	32070
	1-3/8	1	M1822-8	32072
		1-1/4	M1822-10	32074
		1-1/2	M1822-12	32076
		1-3/4	M1822-14	32078
		2	M1822-16	32080
		2-1/4	M1822-18	32082
		2-1/2	M1822-20	32084
		3	M1822-24	32086
		3-1/4	M1822-26	32088
		3-1/2	M1822-28	32090
		4	M1822-32	32092
	1-7/16	1-1/2	M1823-12	32094
		3	M1823-24	32098
	1-1/2	1-1/2	M1824-12	32102
		2	M1824-16	32104
		2-1/2	M1824-20	32106
		3	M1824-24	32108
		3-1/2	M1824-28	32110
		4	M1824-32	32112
	1-5/8	1-3/4	M1826-14	32114
		2	M1826-16	32116
		2-1/2	M1826-20	32118
		3	M1826-24	32120
		3-1/2	M1826-28	32122
		4-1/2	M1826-36	32126
	1-7/8	6-1/2	M1830-52	32128
	2	3	M1832-24	32130
1-3/16	1-3/8	1-3/4	M1922-14	32134
		2	M1922-16	32136
		2-1/2	M1922-20	32138
	1-7/16	1-1/4	M1923-10	32140
		1-1/2	M1923-12	32142
		2	M1923-16	32144
		2-1/2	M1923-20	32146
		3	M1923-24	32148
		3-1/2	M1923-28	32150
	1-1/2	2	M1924-16	32152
		3	M1924-24	32154
		4	M1924-32	32158
	1-9/16	3	M1925-24	32162
		3-1/2	M1925-28	32164
	1-5/8	2	M1926-16	32166
		2-1/2	M1926-20	32168
		3	M1926-24	32170

A	B	C	Catalog Number	Item Code
1-3/16	1-11/16	2	M1927-16	32172
		2-1/2	M1927-20	32174
		3	M1927-24	32176
1-1/4	1-7/16	2-1/2	M2023-20	32180
		3	M2023-24	32182
	1-1/2	1	M2024-8	32184
		1-1/8	M2024-9	32186
		1-1/4	M2024-10	32188
		1-3/8	M2024-11	32190
		1-1/2	M2024-12	32192
		1-5/8	M2024-13	32194
		1-3/4	M2024-14	32196
		2	M2024-16	32198
		2-1/4	M2024-18	32200
		2-1/2	M2024-20	32202
		2-3/4	M2024-22	32204
		3	M2024-24	32206
		3-1/4	M2024-26	32208
		3-1/2	M2024-28	32210
		4	M2024-32	32212
		4-1/4	M2024-34	32214
		4-1/2	M2024-36	32216
		5	M2024-40	32218
		5-1/2	M2024-44	32220
	1-9/16	2	M2025-16	32222
		2-1/2	M2025-20	32224
		3	M2025-24	32226
		3-1/2	M2025-28	32228
		3-3/4	M2025-30	32230
	1-5/8	1-3/4	M2026-14	32232
		2	M2026-16	32234
		2-1/2	M2026-20	32236
		3	M2026-24	32238
		3-1/4	M2026-26	32240
		3-1/2	M2026-28	32242
		4	M2026-32	32244
		4-1/2	M2026-36	32246
		4-3/4	M2026-38	32248
	1-11/16	2	M2027-16	32250
		3-1/4	M2027-26	32254
	1-3/4	1-3/4	M2028-14	32258
		2	M2028-16	32260
		2-1/4	M2028-18	32262
		2-1/2	M2028-20	32264
		2-3/4	M2028-22	32266
		3	M2028-24	32268
		3-1/2	M2028-28	32270
		3-3/4	M2028-30	32272
		4	M2028-32	32274
		5	M2028-40	32276
	1-7/8	2	M2030-16	32278
		2-1/2	M2030-20	32280
		4	M2030-32	32284
	2	3	M2032-24	32286
		4	M2032-32	32288
		6-1/2	M2032-52	32290
1-5/16	1-1/2	1-3/4	M2124-14	32296
		3	M2124-24	32298
	1-5/8	2	M2126-16	32306
		3	M2126-24	32310
		4-3/4	M2126-38	32314
	1-13/16	3	M2129-24	32324
		4	M2129-32	32328
	1-7/8	3-1/2	M2130-28	32330
1-3/8	1-1/2	1-3/4	M2224-14	32334
		2	M2224-16	32336
		2-1/2	M2224-20	32338
	1-5/8	2	M2226-16	32340
		3	M2226-24	32342
		3-1/4	M2226-26	32344
		3-1/2	M2226-28	32346
		4	M2226-32	32348
	1-11/16	3-1/2	M2227-28	32352

Plain Cylindrical Bearings

ALL DIMENSIONS IN INCHES
ORDER BY CATALOG NUMBER OR ITEM CODE

A	B	C	Catalog Number	Item Code
1-3/8	1-3/4	2	M2228-16	32354
		2-1/4	M2228-18	32356
		2-1/2	M2228-20	32358
		3	M2228-24	32360
		3-1/2	M2228-28	32362
		4	M2228-32	32364
	1-7/8	3	M2230-24	32366
		3-1/2	M2230-28	32368
		4	M2230-32	32370
		4-1/2	M2230-36	32372
	2	3	M2232-24	32374
		4	M2232-32	32376
	2-1/8	6-1/2	M2234-52	32378
1-7/16	1-5/8	1-3/4	M2326-14	32380
		2-3/4	M2326-22	32382
		3	M2326-24	32384
	1-11/16	2-1/2	M2327-20	32386
		3	M2327-24	32388
		3-1/2	M2327-28	32390
		4	M2327-32	32392
	1-3/4	2-1/4	M2328-18	32396
		3	M2328-24	32398
		4	M2328-32	32400
	1-13/16	3	M2329-24	32402
		4-1/4	M2329-34	32410
	1-7/8	3	M2330-24	32414
		4	M2330-32	32416
		4-1/2	M2330-36	32420
		5	M2330-40	32422
	1-15/16	2	M2331-16	32424
		3	M2331-24	32426
	2	4	M2332-32	32438
1-1/2	1-5/8	2	M2426-16	32440
	1-11/16	2-3/4	M2427-22	32442
	1-3/4	1-3/4	M2428-14	32444
		2	M2428-16	32446
		2-1/4	M2428-18	32448
		2-1/2	M2428-20	32450
		3	M2428-24	32452
		3-1/2	M2428-28	32454
		4	M2428-32	32456
		4-1/2	M2428-36	32458
		5	M2428-40	32460
		5-1/2	M2428-44	32462
	1-13/16	3	M2429-24	32464
	1-7/8	2	M2430-16	32466
		2-1/2	M2430-20	32468
		2-3/4	M2430-22	32470
		3	M2430-24	32472
		3-1/2	M2430-28	32474
		4	M2430-32	32476
		4-1/2	M2430-36	32478
		5	M2430-40	32480
		5-1/2	M2430-44	32482
	2	2-1/2	M2432-20	32484
		3	M2432-24	32486
		3-1/2	M2432-28	32488
		4	M2432-32	32490
		4-1/2	M2432-36	32492
		5	M2432-40	32494
	2-1/8	3	M2434-24	32496
		4	M2434-32	32498
	2-1/4	3	M2436-24	32500
		4	M2436-32	32502
		5	M2436-40	32504
		6-1/2	M2436-52	32506
1-9/16	1-13/16	3	M2529-24	32508
		3-1/2	M2529-28	32510
	1-15/16	3-1/2	M2531-28	32514
1-5/8	1-7/8	2-1/4	M2630-18	32518
		3	M2630-24	32520
		3-3/4	M2630-30	32522

A	B	C	Catalog Number	Item Code
1-5/8	2	1-3/4	M2632-14	32526
		2-1/2	M2632-20	32528
		2	M2632-24	32530
		4	M2632-32	32534
		5	M2632-40	32538
		5-1/2	M2632-44	32540
	2-1/8	3	M2634-24	32542
		4	M2634-32	32544
1-11/16	1-15/16	3	M2731-24	32550
		3-1/2	M2731-28	32552
	2	3-1/2	M2732-28	32554
		4-1/2	M2732-36	32556
	2-1/16	3	M2733-24	32558
		4	M2733-32	32562
		4-1/2	M2733-36	32564
		5-1/2	M2733-44	32568
	2-3/16	2	M2735-16	32570
		3	M2735-24	32574
		4	M2735-32	32578
	2-1/4	3	M2736-24	32586
		4-1/2	M2736-36	32588
1-3/4	2	2-1/4	M2832-18	32590
		2-1/2	M2832-20	32592
		3	M2832-24	32594
		4	M2832-32	32596
		4-1/2	M2832-36	32598
		5-1/4	M2832-42	32600
	2-1/16	3-1/2	M2833-28	32602
	2-1/8	2-3/4	M2834-22	32604
		3-1/4	M2834-26	32606
		3-1/2	M2834-28	32608
		4	M2834-32	32610
		4-1/4	M2834-34	32612
		5	M2834-40	32614
	2-1/4	1-3/4	M2836-14	32618
		2	M2836-16	32620
		2-1/2	M2836-20	32622
		3	M2836-24	32624
		3-1/2	M2836-28	32626
		4	M2836-32	32628
		4-1/4	M2836-34	32630
		5	M2836-40	32632
	2-3/8	3-1/2	M2838-28	32634
		5	M2838-40	32638
	2-1/2	6-1/2	M2840-52	32640
1-13/16	2-3/16	4	M2935-32	32642
	2-5/16	4	M2937-32	32646
		5	M2937-40	32648
1-7/8	2-1/8	2-1/2	M3034-20	32650
		3	M3034-24	32652
		4	M3034-32	32654
	2-1/4	3	M3036-24	32656
		5	M3036-40	32662
	2-3/8	3	M3038-24	32664
		4	M3038-32	32666
		5-1/4	M3038-42	32668
1-15/16	2-3/16	2	M3135-16	32670
		3	M3135-24	32672
	2-1/4	3	M3136-24	32676
		4-1/2	M3136-36	32678
	2-5/16	3-1/2	M3137-28	32680
		4	M3137-32	32682
		5	M3137-40	32684
		6-1/4	M3137-50	32688
	2-3/8	4	M3138-32	32692
		5-1/2	M3138-44	32694
	2-7/16	3	M3139-24	32696
	2-1/2	3	M3140-24	32704
		5	M3140-40	32706



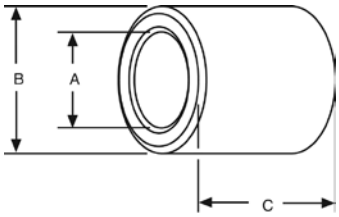

STANDARD TOLERANCES

DIMENSIONS		TOLERANCE
A	3/16 – 3	±.001
	3-1/4 – 4-1/2	±.0015
B	5/16 – 3	+.002 to +.003
	3-1/8 – 5	+.003 to +.005
C	All	±.005

STANDARD CONCENTRICITY

DIMENSIONS		T.I.R. (A TO B)
A	All	.003

For Oil Grooves see Page 179.

BEAR-N-BRONZE 660 Cast Bronze Bearings

Plain Cylindrical Bearings

F



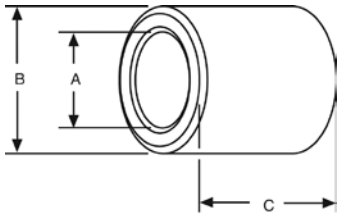

ALL DIMENSIONS IN INCHES
ORDER BY CATALOG NUMBER OR ITEM CODE

A	B	C	Catalog Number	Item Code
2	2-1/4	2	M3236-16	32708
		2-1/2	M3236-20	32710
		3	M3236-24	32712
		3-1/2	M3236-28	32714
		4	M3236-32	32718
		4-1/2	M3236-36	32720
	2-3/8	3	M3238-24	32724
		3-1/2	M3238-28	32726
		4	M3238-32	32728
		4-1/2	M3238-36	32730
	2-1/2	2-1/2	M3240-20	32732
		3	M3240-24	32734
		3-1/2	M3240-28	32736
		4	M3240-32	32738
		4-1/2	M3240-36	32740
		5	M3240-40	32742
		6	M3240-48	32746
	2-5/8	4	M3242-32	32748
	2-3/4	6-1/2	M3244-52	32750
2-1/8	2-1/2	3	M3440-24	32752
		4	M3440-32	32754
	2-5/8	4	M3442-32	32756
		5	M3442-40	32758
		6	M3442-48	32760
2-3/16	2-5/8	4	M3542-32	32762
		5	M3542-40	32764
	2-11/16	3-1/2	M3543-28	32766
		4-1/2	M3543-36	32770
		5	M3543-40	32772
	2-3/4	4-1/2	M3544-36	32774
		5-1/4	M3544-42	32776
		6	M3544-48	32778
	2-7/8	4-1/2	M3546-36	32780
2-1/4	2-1/2	3-1/2	M3640-28	32782
		4	M3640-32	32784
	2-5/8	3	M3642-24	32786
		4	M3642-32	32788
		5	M3642-40	32790
	2-11/16	4-3/4	M3643-38	32792
	2-3/4	3-1/2	M3644-28	32794
		4	M3644-32	32796
		4-1/2	M3644-36	32798
		5	M3644-40	32800
		6	M3644-48	32802
	3	3-1/2	M3648-28	32806
		5	M3648-40	32808
2-3/8	2-3/4	4	M3844-32	32812
		6	M3844-48	32816
	2-7/8	4	M3846-32	32818
		5	M3846-40	32820
2-7/16	2-3/4	4	M3944-32	32824
		5	M3944-40	32826
	2-7/8	3	M3946-24	32828
		5	M3946-40	32830
	2-15/16	4	M3947-32	32832
		5	M3947-40	32834
		6-1/4	M3947-50	32836
	3	3-3/4	M3948-30	32838
		5	M3948-40	32840
		6-/14	M3948-50	32842
2-1/2	2-3/4	4	M4044-32	32844
		5	M4044-40	32846
	2-7/8	3-1/4	M4046-26	32848
		4-1/2	M4046-36	32850
	3	4	M4048-32	32852
		5	M4048-40	32854
		6	M4048-48	32856
		7	M4048-56	32858

A	B	C	Catalog Number	Item Code
2-1/2	3-1/8	3-1/2	M4050-28	32860
		4	M4050-32	32862
		4-1/2	M4050-36	32864
	3-1/4	4	M4052-32	32868
		5	M4052-40	32870
		6	M4052-48	32872
		7-1/4	M4052-58	32874
2-5/8	3-1/2	6-1/2	M4056-52	32876
	3	3	M4248-24	32878
		5	M4248-40	32882
	3-1/8	5	M4250-40	32884
		6	M4250-48	32886
		7-1/4	M4250-58	32888
	3-1/4	7	M4252-56	32890
	3-3/8	6-1/2	M4254-52	32892
2-11/16	3-3/16	6-1/4	M4351-50	32898
2-3/4	3-1/8	4	M4450-32	32900
		5	M4450-40	32902
		6	M4450-48	32904
	3-1/4	4	M4452-32	32906
		5	M4452-40	32908
		6	M4452-48	32910
2-7/8	3-1/2	4-1/2	M4656-36	32926
		6-3/4	M4656-54	32928
2-15/16	3-7/16	3-1/2	M4755-28	32930
		5	M4755-40	32932
		6-1/2	M4755-52	32934
3	3-3/8	4-1/2	M4854-36	32936
		8	M4854-64	32938
	3-1/2	4-1/2	M4856-36	32940
		6	M4856-48	32942
		9	M4856-72	32944
	3-5/8	5	M4858-40	32946
	3-3/4	6-1/4	M4860-50	32952
	4	6-1/2	M4864-52	32954
3-1/4	3-1/2	4	M5256-32	32956
	3-3/4	5	M5260-40	32958
3-7/16	3-15/16	4-1/2	M5563-36	32964
		6-1/2	M5563-52	32966
3-1/2	4	5-1/2	M5664-44	32968
		7	M5664-56	32970
	4-1/8	6	M5666-48	32972
	4-1/4	4-1/2	M5668-36	32974
		7	M5668-56	32976
		9-3/4	M5668-78	32978
3-3/4	4-1/4	5	M6068-40	32980
		7	M6068-56	32982
	4-1/2	6-1/2	M6072-52	32984
4	4-1/2	4	M6472-32	32986
		6	M6472-48	32988
		7	M6472-56	32990
	5	5	M6480-40	32992
		6	M6480-48	32994
4-1/4	4-3/4	5	M6876-40	32998
		6	M6876-48	33000
		7	M6876-56	33002
	5	5	M6880-40	33004
		6	M6880-48	33006
		7	M6880-56	33008
4-1/2	5	6	M7280-48	33010
		7	M7280-56	33012
		8	M7280-64	33014

STANDARD TOLERANCES

DIMENSIONS		TOLERANCE
A	3/16 – 3	±.001
	3-1/4 – 4-1/2	±.0015
B	5/16 – 3	+.002 to +.003
	3-1/8 – 5	+.003 to +.005
C	All	±.005

STANDARD CONCENTRICITY

DIMENSIONS		T.I.R. (A TO B)
A	All	.003

For Oil Grooves see Page 179.

Cored Bars

ALL DIMENSIONS IN INCHES
ORDER BY CATALOG NUMBER OR ITEM CODE

A	B	Aprx. Wgt. (Lbs.)	Catalog Number	Item Code
1/2	1	2-3/4	MCB816	33016
	1-1/8	3-3/4	MCB818	33018
	1-1/4	4-3/4	MCB820	33020
	1-1/2	7	MCB824	33024
	1-3/4	9-3/4	MCB828	33026
	2	12-3/4	MCB832	33028
5/8	1	2	MCB1016	47640
	1-1/8	3	MCB1018	33030
	1-1/4	4	MCB1020	33032
	1-3/8	5	MCB1022	33034
	1-1/2	6-1/2	MCB1024	33036
	1-3/4	9	MCB1028	33040
3/4	1	1-1/2	MCB1216	47641
	1-1/8	2-1/2	MCB1218	47642
	1-1/4	3-1/2	MCB1220	33046
	1-3/8	4-1/2	MCB1222	33048
	1-1/2	5-1/2	MCB1224	33050
	1-3/4	8	MCB1228	33054
	2	11-1/2	MCB1232	33058
	2-1/4	15	MCB1236	33062
	2-1/2	19-1/2	MCB1240	33064
	2-3/4	24	MCB1244	33066
7/8	1-1/8	1-7/8	MCB1418	47643
	1-1/4	2-7/8	MCB1420	47644
	1-3/8	4	MCB1422	33068
	1-1/2	5	MCB1424	33070
	1-5/8	6-1/2	MCB1426	33072
	1-3/4	7-1/2	MCB1428	33074
	2	11	MCB1432	33078
1	1-1/4	2	MCB1620	47645
	1-3/8	3-1/8	MCB1622	47646
	1-1/2	4-1/2	MCB1624	33084
	1-5/8	5-1/2	MCB1626	33086
	1-3/4	7	MCB1628	33088
	1-7/8	8-1/2	MCB1630	33090
	2	10	MCB1632	33092
	2-1/4	13-1/2	MCB1636	33096
	2-1/2	17-1/2	MCB1640	33100
	2-3/4	22	MCB1644	33102
	3	27	MCB1648	33104
	2-1/4	32	MCB1652	33106
	3-1/2	37-1/2	MCB1656	33108
	4	50	MCB1664	33110

A	B	Aprx. Wgt. (Lbs.)	Catalog Number	Item Code
1-1/8	1-3/8	2-1/4	MCB1822	47647
	1-1/2	4-1/2	MCB1824	47648
	1-5/8	5	MCB1826	33112
	2-1/8	11-1/2	MCB1834	33120
	2-1/2	16-1/2	MCB1840	33126
1-1/4	1-1/2	2-1/2	MCB2024	47649
	1-5/8	3-7/8	MCB2026	47650
	1-3/4	5-1/2	MCB2028	33132
	1-7/8	7	MCB2030	33134
	2	8-1/2	MCB2032	33136
	2-1/8	10-1/2	MCB2034	33138
	2-1/4	12	MCB2036	33140
	2-1/2	16	MCB2040	33144
	2-3/4	20	MCB2044	33148
	3	25	MCB2048	33152
	3-1/4	30	MCB2052	33154
	3-1/2	35-1/2	MCB2056	33156
1-3/8	1-3/4	4-1/4	MCB2228	47652
	1-7/8	6	MCB2230	33160
	2	7-1/2	MCB2232	33162
	2-1/8	9-1/2	MCB2234	33164
	2-1/4	11	MCB2236	33166
	2-3/8	12-1/2	MCB2238	33168
1-1/2	1-3/4	3	MCB2428	47653
	1-7/8	4-1/2	MCB2430	47654
	2	6	MCB2432	33178
	2-1/8	8	MCB2434	33180
	2-1/4	10	MCB2436	33182
	2-3/8	11-1/2	MCB2438	33184
	2-1/2	14	MCB2440	33186
	2-3/4	18	MCB2444	33190
	3-1/4	27-1/2	MCB2452	33194
	3-1/2	33	MCB2456	33196
	3-3/4	40	MCB2460	33198
	4	45	MCB2464	33200
	4-1/2	62	MCB2472	33202

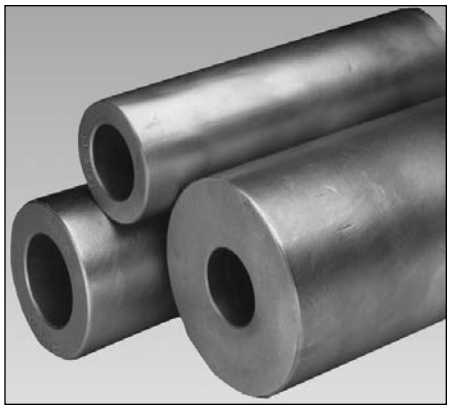

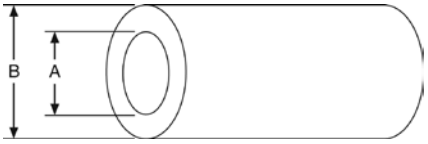

STANDARD TOLERANCES

DIMENSIONS		TOLERANCE
A	1/2 – 4	– 1/16
	4-1/4 – 8	– 1/8
B	1 – 4	+ 1/16
	4-1/4 – 9	+ 1/8

All bars are 13” long.
Contact factory for bars longer than 13”. Available in lengths up to 105”.

BEAR-N-BRONZE 660 Cast Bronze Bearings

Cored Bars

F

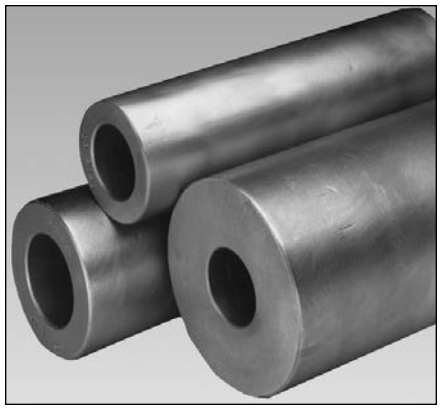

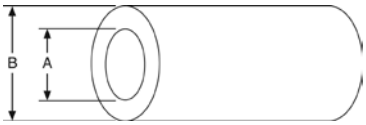

STANDARD TOLERANCES

DIMENSIONS		TOLERANCE
A	1/2 – 4	– 1/16
	4-1/4 – 8	– 1/8
B	1 – 4	+ 1/16
	4-1/4 – 9	+ 1/8

ALL DIMENSIONS IN INCHES
ORDER BY CATALOG NUMBER OR ITEM CODE

A	B	Aprx. Wgt. (Lbs.)	Catalog Number	Item Code
1-5/8	2	4-7/8	MCB2632	47655
	2-1/8	7	MCB2634	33204
	2-1/4	9	MCB2636	33206
	2-3/8	10-1/2	MCB2638	33208
1-3/4	2	3-3/8	MCB2832	47656
	2-1/8	5-1/8	MCB2834	47657
	2-1/4	7-1/2	MCB2836	33218
	2-3/8	9	MCB2838	33220
	2-1/2	11	MCB2840	33222
	2-5/8	13-1/2	MCB2842	33224
	2-3/4	15-1/2	MCB2844	33226
	3	20	MCB2848	33230
	3-1/4	25	MCB2852	33232
	3-1/2	31	MCB2856	33234
	4	42-1/2	MCB2864	33238
	4-1/4	50	MCB2868	33240
1-7/8	2-1/4	5-1/2	MCB3036	47658
	2-3/8	7-1/2	MCB3038	33242
	2-1/2	9-3/4	MCB3040	33244
	2-5/8	12	MCB3042	33246
2	2-1/4	3-7/8	MCB3236	47659
	2-1/2	8-1/2	MCB3240	33256
	2-5/8	10	MCB3242	33258
	2-3/4	12-1/4	MCB3244	33260
	3	16-1/2	MCB3248	33264
	3-1/4	22	MBC3252	33266
	3-1/2	29	MCB3256	33268
	3-3/4	34	MCB3260	33270
	4	39-1/2	MCB3264	33272
	4-1/2	54	MCB3272	33274
	5	69	MCB3280	33276
	6	105-1/2	MCB3296	33278
2-1/8	2-5/8	8-1/2	MCB3442	33280
	2-7/8	13	MCB3446	33284
2-1/4	2-3/4	9	MCB3644	33294
	3-1/4	19	MBC3652	33302
	3-1/2	25	MCB3656	33304
	3-3/4	30-1/2	MCB3660	33306
	4	37	MCB3664	33308
	4-1/4	43	MCB3668	33310

A	B	Aprx. Wgt. (Lbs.)	Catalog Number	Item Code
2-3/8	3	12	MCB3848	33314
2-1/2	3	9-7/8	MCB4048	47661
	3-1/8	13	MCB4050	33324
	3-1/4	15	MCB4052	33326
	3-1/2	21	MCB4056	33328
	3-3/4	27	MCB4060	33330
	4	33-1/2	MCB4064	33332
	4-1/4	40	MCB4068	33334
	4-1/2	46	MCB4072	33336
	5	61	MCB4080	33340
	5-1/2	78	MCB4088	33342
2-3/4	3-1/2	19-1/2	MCB4456	47662
	3-3/4	22-1/2	MCB4460	33354
	4	28-1/2	MCB4464	33356
	4-1/4	35	MCB4468	33358
	4-1/2	42	MCB4472	33360
2-7/8	4	26-3/4	MCB4664	33364
3	3-1/2	11-1/2	MCB4856	47663
	3-3/4	18-1/4	MCB4860	33366
	4	24-1/2	MCB4864	33368
	4-1/4	31	MCB4868	33370
	4-1/2	38	MCB4872	33372
	4-3/4	45	MCB4876	33374
	5	52	MCB4880	33376
	5-1/2	70	MCB4888	33378
	6	89-1/2	MCB4896	33380
	6-1/2	110	MCB48104	33382
3-1/4	4	19-1/2	MCB5264	47664
	4-1/4	25-1/2	MCB5268	33384
	4-1/2	34	MCB5272	33386
	5	48	MCB5280	33390
3-1/2	4-1/4	20-7/8	MCB5668	47665
	4-1/2	30	MCB5672	33394
	4-3/4	35-1/2	MCB5676	33396
	5	44	MCB5680	33398
	5-1/2	61	MCB5688	33400
	6	79	MCB5696	33402
	6-1/2	107-1/2	MCB56104	47666
3-3/4	4-1/2	22-1/4	MCB6072	47667
	4-3/4	29	MCB6076	33404
	5	38	MCB6080	33406
	6	74	MCB6096	33410

All bars are 13” long.
Contact factory for bars longer than 13”.

Cored Bars

ALL DIMENSIONS IN INCHES
ORDER BY CATALOG NUMBER OR ITEM CODE

A	B	Aprx. Wgt. (Lb.)	Catalog Number	Item Code
4	4-3/4	22-3/4	MCB6476	47668
	5	32-1/4	MCB6480	47669
	5-1/2	49	MCB6488	33412
	6	67-1/2	MCB6496	33414
	6-1/2	87	MCB64104	33416
	7	109	MCB64112	33510
	7-1/2	134	MCB64120	33512
4-1/4	5-1/2	41-1/4	MCB6888	47670
	6	61	MCB6896	33418
	6-1/2	82	MCB68104	33514
4-1/2	5-1/2	36	MCB7288	47671
	6	56-1/2	MCB7296	47672
	6-1/2	75	MCB72104	33420
	7	97	MCB72112	33422
4-3/4	6	67	MCB7696	47673
5	6	39	MCB8096	33428
	7	81	MCB80112	33430
	7-1/2	104	MCB80120	33516
	8	130	MCB80128	33518

Aprx. A	B	Wgt. (Lb.)	Catalog Number	Item Code
5-1/4	7	77	MCB84112	47675
5-1/2	6-1/2	43	MCB88104	47676
	7	67-1/4	MCB88112	47677
	7-1/2	91	MCB88120	33434
	8	113	MCB88128	33436
5-3/4	7-1/2	79	MCB92120	33438
6	7	46-1/2	MCB96112	47678
	7-1/2	72-1/2	MCB96120	47679
	8	94	MCB96128	33440
	9	151	MCB96144	33522
6-1/2	7-1/2	50-1/4	MCB104120	47681
	8	84	MCB104128	47682
	9	130	MCB104144	33442
8	9	61	MCB128144	47684

All bars are 13” long.
Contact factory for bars longer than 13”.

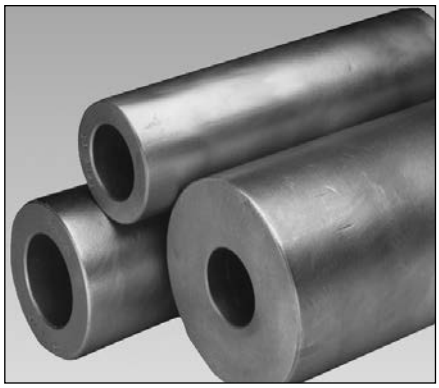

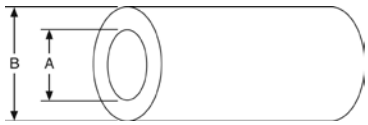

STANDARD TOLERANCES

DIMENSIONS		TOLERANCE
A	1/2 – 4	– 1/16
	4-1/4 – 8	– 1/8
B	1 – 4	+ 1/16
	4-1/4 – 9	+ 1/8

Solid Bars

ALL DIMENSIONS IN INCHES
ORDER BY CATALOG NUMBER OR ITEM CODE

B	Aprx. Wgt. (Lb.)	Catalog Number	Item Code
1/2	1	MS8	33444
5/8	1-1/2	MS10	33446
3/4	2	MS12	33448
7/8	2-3/4	MS14	33450
1	3-1/2	MS16	33452
1-1/8	4-1/2	MS18	33454
1-1/4	5-1/2	MS20	33456
1-3/8	6-1/2	MS22	33458
1-1/2	7-1/2	MS24	33460
1-5/8	8-1/2	MS26	33462
1-3/4	10-1/4	MS28	33464
1-7/8	11-1/2	MS30	33466
2	14	MS32	33468
2-1/4	17	MS36	33472
2-1/2	21-1/2	MS40	33476
2-5/8	23-1/2	MS42	33478
2-3/4	25-1/2	MS44	33480

B	Aprx. Wgt. (Lb.)	Catalog Number	Item Code
3	30	MS48	33484
3-1/4	35-1/2	MS52	33486
3-1/2	41	MS56	33488
4	53	MS64	33492
4-1/4	59	MS68	33494
4-1/2	67	MS72	33496
4-3/4	73	MS76	33536
5	82	MS80	33498
5-1/2	98	MS88	33500
6	118	MS96	33502
6-1/2	139	MS104	33538
7	161	MS112	33504
7-1/2	186	MS120	33506
8	210-1/2	MS128	33508
9	273	MS144	33544

All Bars are 13” long.
Contact Factory for Bars longer than 13”.

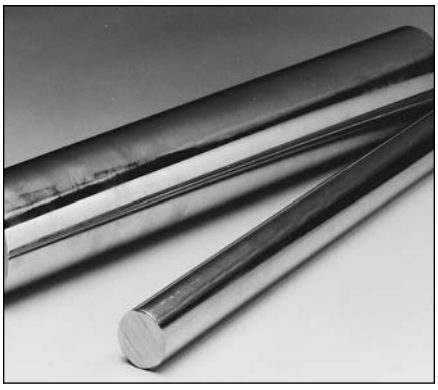

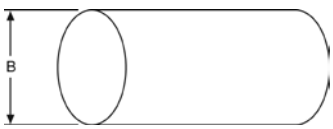

STANDARD TOLERANCES

DIMENSIONS		TOLERANCE
B	1/2 – 4	+ 1/16 approx.
	4-1/4 – 9	+ 1/8 approx.

Bronze Bearing Emergency Banks

F



Actual Size of Bank 10-1/2 x 13-1/2"

SAVES MONEY — Reduce time lost when breakdowns occur due to bearing failures. You own stock — any time — day or night.

COMPACT — Handy metal kit keeps bearings together in conveniently labeled compartments. Bearings where you want them — when you need them.

REFILLS AVAILABLE — Both kit and replacement bearings are available from stock.

See your Boston Gear Distributors, in all major cities — from coast to coast.

BOST-BRONZ Emergency Bank

Order by Catalog Number-34500 BBB-1

There are two each of the 47 bearing sizes below in the bank.

B46-8	1/4 x 3/8 x 1	B913-12	9/16 x 13/16 x 1-1/2	B1618-16	1 x 1-1/8 x 2
B47-8	1/4 x 7/16 x 1	B1012-12	5/8 x 3/4 x 1-1/2	B1620-20	1 x 1-1/4 x 3
B48-8	1/4 x 1/2 x 1	B1013-16	5/8 x 13/16 x 2	B1622-24	1 x 1-3/8 x 3
B56-8	5/16 x 3/8 x 1	B1014-16	5/8 x 7/8 x 2	B1624-16	1 x 1-1/2 x 2
B58-8	5/16 x 1/2 x 1	B1016-16	5/8 x 1 x 2	B1721-20	1-1/16 x 1-5/16 x 2-1/2
B68-10	3/8 x 1/2 x 1-1/4	B1114-16	11/16 x 7/8 x 2	B1822-24	1-1/8 x 1-3/8 x 3
B69-10	3/8 x 9/16 x 1-1/4	B1214-12	3/4 x 7/8 x 1-1/2	B1824-16	1-1/8 x 1-1/2 x 2
B610-10	3/8 x 5/8 x 1-1/4	B1215-16	3/4 x 15/16 x 2	B1923-24	1-3/16 x 1-7/16 x 3
B79-10	7/16 x 9/16 x 1-1/4	B1216-20	3/4 x 1 x 2-1/2	B1924-24	1-3/16 x 1-1/2 x 3
B710-10	7/16 x 5/8 x 1-1/4	B1218-16	3/4 x 1-1/8 x 2	B2024-24	1-1/4 x 1-1/2 x 3
B711-12	7/16 x 11/16 x 1-1/2	B1316-16	13/16 x 1 x 2	B2026-16	1-1/4 x 1-5/8 x 2
B810-12	1/2 x 5/8 x 1-1/2	B1416-12	7/8 x 1 x 1-1/2	B2126-24	1-5/16 x 1-5/8 x 3
B812-16	1/2 x 3/4 x 2	B1418-20	7/8 x 1-1/8 x 2-1/2	B2228-16	1-3/8 x 1-3/4 x 2
B813-12	1/2 x 13/16 x 1-1/2	B1420-16	7/8 x 1-1/4 x 2	B2328-24	1-7/16 x 1-3/4 x 3
B814-12	1/2 x 7/8 x 1-1/2	B1519-16	15/16 x 1-3/16 x 2	B2430-16	1-1/2 x 1-7/8 x 2
B912-12	9/16 x 3/4 x 1-1/2	B1520-16	15/16 x 1-1/4 x 3		

BEAR-N-BRONZ Emergency Bearing Bank

Order by Item Code

Bank #1 Item Code – 31300

Bank #2 Item Code – 31304

Bank #1

There are two each of the 30 bearing sizes below in the bank.

M46-10	1/4 x 3/8 x 1-1/4	M1824-16	1-1/8 x 1-1/2 x 2	M1219-12	3/4 x 1-3/16 x 1-1/2
M58-10	5/16 x 1/2 x 1-1/4	M1923-16	1-3/16 x 1-7/16 x 2	M1318-12	13/16 x 1-1/8 x 1-1/2
M69-10	3/8 x 9/16 x 1-1/4	M1926-16	1-3/16 x 1-5/8 x 2	M1419-8	7/8 x 1-3/16 x 1
M710-10	7/16 x 5/8 x 1-1/4	M2026-20	1-1/4 x 1-5/8 x 2-1/2	M1420-12	7/8 x 1-1/4 x 1-1/2
M812-12	1/2 x 3/4 x 1-1/2	M2228-18	1-3/8 x 1-3/4 x 2-1/4	M1620-16	1 x 1-1/4 x 2
M816-16	1/2 x 1 x 2	M2230-24	1-3/8 x 1-7/8 x 3	M1624-16	1 x 1-1/2 x 2
M912-12	9/16 x 3/4 x 1-1/2	M2328-24	1-7/16 x 1-3/4 x 3	M1824-16	1-1/8 x 1-1/2 x 2
M1014-12	5/8 x 7/8 x 1-1/2	M2330-32	1-7/16 x 1-7/8 x 4	M1923-16	1-3/16 x 1-7/16 x 2
M1115-12	11/16 x 15/16 x 1-1/2	M2428-18	1-1/2 x 1-3/4 x 2-1/4	M2028-16	1-1/4 x 1-3/4 x 2
M1216-12	3/4 x 1 x 1-1/2	M2430-20	1-1/2 x 1-7/8 x 2-1/2	M2126-16	1-5/16 x 1-5/8 x 2
M1316-12	13/16 x 1 x 1-1/2	M2432-28	1-1/2 x 2 x 3-1/2	M2228-16	1-3/8 x 1-3/4 x 2
M1420-14	7/8 x 1-1/4 x 1-3/4	M2630-30	1-5/8 x 1-7/8 x 3-3/4	M2330-24	1-7/16 x 1-7/8 x 3
M1520-20	15/16 x 1-1/4 x 2-1/2	M2632-24	1-5/8 x 2 x 2	M2428-18	1-1/2 x 1-3/4 x 2-1/4
M1620-16	1 x 1-1/4 x 2	M2832-32	1-3/4 x 2 x 4	M2430-20	1-1/2 x 1-7/8 x 2-1/2
M1624-16	1 x 1-1/2 x 2			M2432-20	1-1/2 x 2 x 2-1/2
M1723-20	1-1/16 x 1-7/16 x 2-1/2			M2630-18	1-5/8 x 1-7/8 x 2-1/4
				M2632-24	1-5/8 x 2 x 3
				M2832-24	1-3/4 x 2 x 3
				M3238-32	2 x 2-3/8 x 4
				M3644-32	2-1/4 x 2-3/4 x 4

Bank #2

There are two each of the 20 bearing sizes below in the bank.



BOStonE F-1 glass filled material is completely self-lubricating with outstanding wear and corrosion resistance properties, machined from extruded rods to close tolerances. BOStonE F-1 material has a wide temperature capability and an excellent PV value. **BOStonE F-1 bearings may be green, white or any other color.**

Lubrication of these bearings is not required. Teflon®, the major ingredient of BOStonE F-1 material (75% to 80%), has excellent self-lubricating characteristics and a low coefficient of friction. The remaining 20% to 25% is glass.

BOStonE F-1 bearing material has excellent strength and wearability and was developed to withstand high loads at moderate speeds. The allowable operating temperature range is –400° to +550°F.

Typical applications for BOStonE F-1 bearings are textile machinery, farm implements, food processing equipment, pulp and paper machinery, business machinery, aircraft, home appliances, automotive and machine tools as well as many others, in both the electrical and chemical fields.

Cylindrical, Flanged and Thrust Bearings and Solid Bars are stocked in BOStonE F-1 material.

Selection

In general, sleeve bearings should be selected with a length of one to two times the shaft diameter and an O.D. approximately 25% larger than the shaft diameter.

A general guide to determination of limiting load and velocity values for sleeve bearings has been established by the use of PV calculations. PV represents Pressure x Velocity, for example 100 psi x 20 fpm yields a PV of 2000.

Maximum PV value for BOStonE F-1 bearings: 20,000 (50,000 for intermittent service).

For complete selection and application information, see Engineering Section, Pages 174-182.

BOStonE F-1 Glass Filled Teflon Bearings

F

Plain Cylindrical Bearings



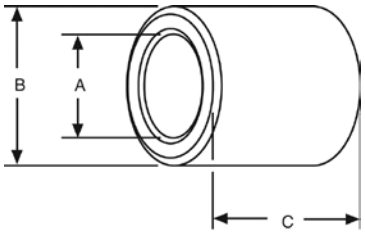

ALL DIMENSIONS IN INCHES
ORDER BY CATALOG NUMBER OR ITEM CODE

A	B	C	Catalog Number	Item Code
3/16 .191	5/16 .313	1/4 3/8 1/2	P35-2 P35-3 P35-4	56821 56822 56823
1/4 .254	3/8 .376	1/4 3/8 1/2	P46-2 P46-3 P46-4	56824 56825 56826
5/16 .316	1/2 .501	3/8 1/2	P58-3 P58-4	56827 56828
3/8 .379	9/16 .563	3/8 1/2 3/4	P69-3 P69-4 P69-6	56829 56830 56831
7/16 .441	5/8 .626	3/8 1/2 3/4	P710-3 P710-4 P710-6	56832 56833 56834
1/2 .504	3/4 .751	1/2 3/4 1	P812-4 P812-6 P812-8	56835 56836 56837
5/8 .630	7/8 .876	5/8 3/4 1	P1014-5 P1014-6 P1014-8	56841 56842 56843
11/16 .693	15/16 .938	3/4	P1115-6	56844

On A and B dimensions, tolerances apply to actual (decimal) dimensions

A	B	C	Catalog Number	Item Code
3/4 .755	1 1.001	1/2 3/4 1	P1216-4 P1216-6 P1216-8	56845 56846 56847
7/8 .880	1-1/8 1.126	3/4 1	P1418-6 P1418-8	56848 56849
1 1.005	1-1/4 1.251	3/4 1 1-1/2	P1620-6 P1620-8 P1620-12	56850 56851 56852
1-1/8 1.130	1-3/8 1.376	3/4 1 1-1/2	P1822-6 P1822-8 P1822-12	56853 56854 56855
1-1/4 1.255	1-1/2 1.501	3/4 1 1-1/2	P2024-6 P2024-8 P2024-12	56856 56857 56858
1.380	1.626	1-1/2	P2226-12	56860
1-1/2 1.506	1-3/4 1.751	1 1-1/2 2	P2428-8 P2428-12 P2428-16	56861 56862 56863
1-5/8 1.631	1-7/8 1.876	1-3/4	P2630-14	56864
1-3/4 1.756	2 2.001	1-3/4	P2832-14	56865
1-7/8 1.881	2-1/8 2.126	2	P3034-16	56866
2 2.006	2-1/4 2.251	2	P3236-16	56867

STANDARD TOLERANCES

DIMENSIONS		TOLERANCE
A B	All	+.002 to –.000
C	All	±.005

STANDARD CONCENTRICITY

DIMENSIONS		T.I.R. (A TO B)
A	.129 – 1.005	.003
	1.130 – 2.006	.004

Flanged Bearings

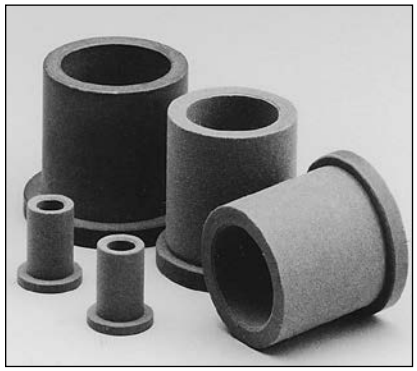

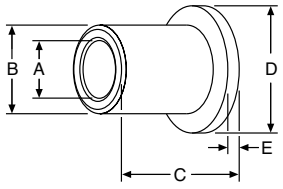

ALL DIMENSIONS IN INCHES
ORDER BY CATALOG NUMBER OR ITEM CODE

A	B	C	D	E	Catalog Number	Item Code
3/16 .191	5/16 .313	1/4 1/2	.437	1/16	FP35-2 FP35-4	56868 56869
1/4 .254	3/8 .376	3/8 1/2	.500	1/16	FP46-3 FP46-4	56870 56871
3/8 .379	5/8 .626	1/2 3/4	.875	1/8	FP610-4 FP610-6	56872 56873
1/2 .504	3/4 .751	1/2 3/4 1	1.000	1/8	FP812-4 FP812-6 FP812-8	56874 56875 56876
5/8 .630	7/8 .876	3/4 1	1.000	1/8	FP1014-6 FP1014-8	56877 56878
3/4 .755	1 1.001	1	1.250	1/8	FP1216-8	56879

On A and B dimensions, tolerances apply to actual (decimal) dimensions

STANDARD TOLERANCES

DIMENSIONS		TOLERANCE
A B	All	+.002 to –.000
C	All	±.005
D	All	±.005
E	All	±.003

STANDARD CONCENTRICITY

DIMENSIONS		T.I.R. (A TO B)
A	All	.003

BOStonE F-1 Glass Filled Teflon Bearings

Thrust Type

ALL DIMENSIONS IN INCHES
ORDER BY CATALOG NUMBER OR ITEM CODE

A	B	C	Catalog Number	Item Code
1/4 .254	5/8 .625	.060	TP410	56880
3/8 .379	3/4 .750	.060	TP612	56881
1/2 .504	1 1.000	.060	TP816	56882

On A and B dimensions, tolerances apply to actual (decimal) dimensions.

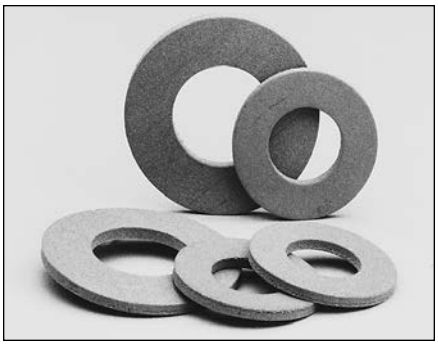

STANDARD TOLERANCES

DIMENSIONS		TOLERANCE
A	All	+.010 / –.000
B	All	+.000 / -.010
C	All	+.004 / -.000
E	All	+.004 / -.000

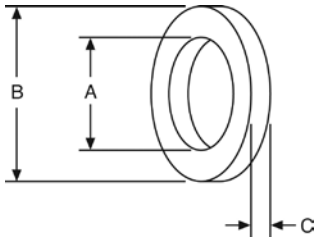

Solid Bars (Extruded)

ALL DIMENSIONS IN INCHES
ORDER BY CATALOG NUMBER OR ITEM CODE

B	Approx. Weight (In Lbs.)	Catalog Number	Item Code
1/4	.065	SP4	50958
3/8	.135	SP6	50959
1/2	.233	SP8	50960
1	.878	SP16	50962
1-1/4	1.355	SP20	50963
1-1/2	1.937	SP24	50964
2	3.250	SP32	50965

All Bars are 13” long.
Other Diameters and longer Lengths are available on special order.



STANDARD TOLERANCES

DIMENSIONS		TOLERANCE
B	1/4 - 1/2	–.000 to +.015
	3/4 - 1	–.000 to +.020
	1-1/4	–.000 to +.030
	1-1/2 - 2	–.000 to +.040

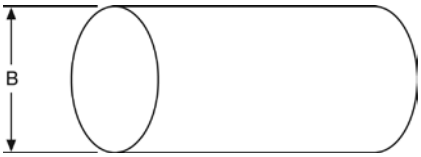

Other BOStonE F-1 SHAPES AVAILABLE ON SPECIAL ORDER



CORED BARS

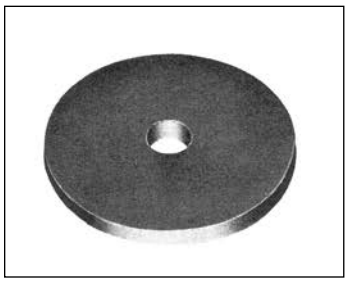

CIRCULAR DISCS



TUBING



PLATES

RULON® 641 Bearings

F



Boston Gear's RULON 641 Bearings are designed to overcome the chronic problems that plague bearings used in food and pharmaceutical applications.

Features

- FDA cleared, USDA accepted non-toxic materials
- RULON 641 compound of virgin PTFE and fillers designed to meet poultry and meat industry specs
- FDA drug master file numbered to allow for incidental contact with body fluids
- Excellent load and wear characteristics for continuous non-lubricated service
- Compatible with food and drug industries standard stainless steels 303 and 316 as well as 1018 mild steel
- Designed for performance at extremely high temperatures. PV value of 10,000 with 316 stainless steel
- Capable of speeds up to 400 ft/minute under dry, low-load operation
- Stick-slip is virtually nonexistent due to low friction at start-up and slow speeds. Ideal for oscillating or start/stop applications
- Corrosion resistant, unaffected by all common acids, bases, and solvents
- Shatter proof design to eliminate sudden breakdowns

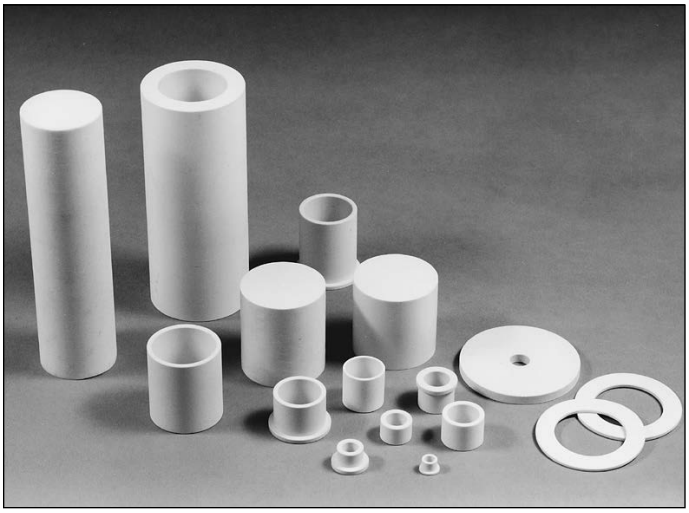

Why RULON 641 for Food and Pharmaceutical Applications

- White natural color and lower friction than when using carbon bearings
- No metallic debris to drop into a process such as when using bronze bearings
- No leaky lubricants or lubricants damaged by high or low temperatures or cleaning solutions such as when using bronze bearings
- RULON 641 has a wider temperature tolerance and better load carrying capabilities than UHMWPE materials
- RULON 641 has better wear properties and better high temperature load carrying capabilities than virgin PTFE alone
- Reduced downtime
- No lubrication required

F

Applications

RULON 641 bearings are perfect for use in machinery and equipment in the following areas:

- Prepared meat products
- Frozen foods
- Cookies and crackers
- Candy
- Animal and marine fats and oils
- Malt beverages
- Medicinal chemicals
- Pharmaceutical preparations
- Soaps and detergents
- Perfumes and cosmetics
- Food-related packing and sealing devices
- Food and drug conveyors
- Coffee
- Food preparations
- Biological products
- Food process machinery
- Vending machines
- Household cooking equipment and appliances

Recommended Operating Limits	RULON 641
Temperature — Typical Range °F	– 400/+500
Maximum PV (continuous)	10,000
Maximum P — PSI (static)	1,000
Maximum V — SFM (no load)	400
Shaft Hardness — Minimum	RB25
Shaft Finish Recommended RMS	8 – 16
	Mild Steel, 303 +316 Stainless Steel

Engineering Information	RULON 641
Friction—Static & Dynamic	.10–.30
Water Absorption ASTM D570	0%
Flammability ASTM D635	Non-Flammable
Chemical Resistance	Inert
Thermal Conductivity BTU/hr/sq. ft/°F/in.	2.60
Linear Coefficient of 78°F–200°F	[B]3.9 x 10^{-5}
Thermal Expansion	[C]4.9 x 10^{-5}
(-78°F)–(350°F)	[B]4.2 x 10^{-5}
	[C]5.7 x 10^{-5}

Note: B = Bearing Diameter C = Bearing Length

SLEEVE BEARINGS

A –.000 +.002 ID	B –.000 +.002 OD	Recommended Housing Bore*	Recommended Shaft Size	C ±.005	Catalog Number	Item Code
1/4 .254	3/8 .376	.375/.374	.2500/.2490	.250 .375	RP46-2 RP46-3	56790 56791
3/8 .379	9/16 .563	.562/.561	.3750/.3740	.375	RP69-3	56792
1/2 .504	3/4 .751	.750/.749	.5000/.4990	.500	RP812-4	56793
5/8 .630	7/8 .876	.875/.874	.6250/.6240	.625	RP1014-5 RP1014-8	56794 56795
3/4 .755	1 1.001	1.000/.999	.7500/.7490	.750 1.500	RP1216-6 RP1216-12	56796 56797
1 1.005	1-1/4 1.251	1.250/1.249	1.000/.9990	1.000 1.500	RP1620-8 RP1620-12	56798 56799
1-1/4 1.255	1-1/2 1.501	1.500/1.499	1.250/1.249	2.000	RP2024-16	56800
1-1/2 1.506	1-3/4 1.751	1.750/1.749	1.500/1.499	2.000	RP2428-16	56801



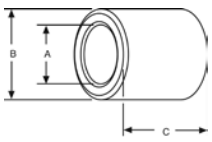

Other Shapes Available On Special Order

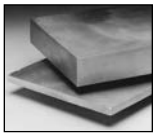

PLATES

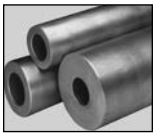

CORED BARS

FLANGED BEARINGS

A –.000 +.002	B –.000 +.002	Recommended Housing Bore*	Recommended Shaft Size	C Lgth. ±.005	Flange D ±.005	Flange E ±.003	Catalog Number	Item Code
1/4 .254	3/8 .376	.375/.374	.2500/.2490	.500	.500	.062	RFP46-4	56802
3/8 .379	5/8 .626	.625/.624	.3750/.3740	.500	.875	.125	RFP610-4	56803
1/2 .504	3/4 .751	.750/.749	.5000/.4990	1.000	1.000	.125	RFP812-8	56804
5/8 .630	7/8 .876	.875/.874	.6250/.6240	1.000	1.000	.125	RFP1014-8	56805
3/4 .755	1 1.001	1.000/.999	.7500/.7490	1.000	1.250	.125	RFP1216-8	56817



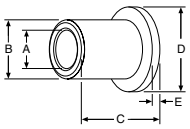

SOLID BARS

B (Dia.)	Standard Tolerances	Approx. Wt. Lbs.	Catalog Number	Item Code
1/2 .504	–.000-/+.015	.233	RSP-8	56786
3/4 .755	–.000/+.015	.503	RSP-12	56787
1 1.005	–.000/+.020	.878	RSP-16	56788

All Bars are 13" long
Other Diameters and longer lengths are available on special order.





*Press fit. .004/.001 Note: On A and B dimensions, tolerances apply to actual (decimal) dimensions.

BOStonE Molded Plastic Bearings

F



Boston stocks Cylindrical, Flanged and Roll End Bearings in five materials —

1. Nylon (N) exhibits good chemical and corrosion resistance. Excellent abrasion resistance and low surface friction provide long wear without lubrication. These nylon bearings are black. Good up to 225ºF maximum.
2. Delrin® and Celcon® (D) are trademarks for equivalent Acetal Resins produced by Du Pont and Celanese respectively. Acetals possess excellent moisture resistance characteristics. These materials are white. Good up to 225ºF maximum.
3. Nylatron® GS (GS) is a trademark for molybdenum disulfide filled nylon produced by the Polymer Corp. Nylatron® GS exhibits excellent abrasion resistance. Nylatron® GS is dark gray in color. Good up to 225ºF maximum.
4. Teflon filled Acetal (AF) — Teflon.® This material has excellent abrasion and corrosion resistance and high lubricity against steel. Good up to 225ºF maximum.
5. Teflon filled Nylon (TN) used for Hanger Bearings only, is light gray in color.

Roll End Bearings

These bearings are available in almost every conceivable size directly from stock — no costly waiting, tooling or set-up charges.

Sizes are interchangeable with existing wood and ball bearings. Several objectives can be met with Roll End Bearings made of our selected plastic resins.

1. No lubricant required
2. Clean — Neat appearance
3. Non-contamination
4. Resistant to moisture & chemicals
5. Quiet operation
6. Excellent load & wear ratings

Size variation is easily accomplished by rebore or remachine operations, simply state size desired. Bores can be reduced with bushing inserts. Adaptors are available for hex shafts.

(AF) Roll End Bearings, 3" and up, are Delrin or Celcon with a Teflon filled Acetal bushing. This combination provides a low cost unit with the superior properties of a Teflon filled bearing. However, one piece Teflon filled Acetal bearings can be offered upon request.

For bearings not shown — write for prices stating quantity desired.

Blind Bore Bearings

Blind Bore Bearings are available on special order. Minimum quantities will apply. They are available for roll end bearing sizes 818 through 2216 and 8P40 through 20P40. Depth of blind bores is 1/8" less than total bearing length. When ordering, add "B" to Catalog Number.

Selection

A general guide to determination of limiting load and velocity values for sleeve bearings has been established by the use of PV calculations. PV represents Pressure x Velocity, for example: 100 psi x 20 fpm yields a PV of 2000.

Maximum PV values for BostonE Molded Plastic Bearings are:

Nylon (N) — 3,000

Delrin or Celcon (D) — 3,000

Nylatron GS (GS) — 4,000

Teflon filled Acetal (AF) — 8,000

Teflon filled nylon (TN) — 10,000

For complete selection and application information, see Engineering Section, Pages 174-181.

Teflon® is a registered trademark of Dupont.

Plain Cylindrical Bearings

ALL DIMENSIONS IN INCHES
ORDER BY CATALOG NUMBER OR ITEM CODE

A*	B*	C	Catalog Number	Item† Code
1/4	1/2	7/8	GS48-7	57551
5/16	1/2	7/8	GS58-7	57552
3/8	1/2	7/8	GS68-7	57553
1/2	5/8	1	AF810-8	57555
5/8	3/4	3/4	GS1012-6 AF1012-6	57557 57558
5/8	3/4	1-1/2	GS1012-12 AF1012-12	57559 57560
3/4	1	1-1/2	GS1216-12 AF1216-12	57561 57562
1	1-1/4	2	GS1620-16	57565

†Any item listed WITHOUT an item Code Number is available on a SPECIAL ORDER BASIS and minimun quantities may apply.



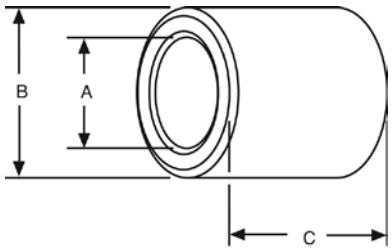

Material

Delrin or Celcon (Acetals) — D
Nylatron GS (Molybdenum disulfide filled nylon) — GS
Teflon filled Acetal (Teflon added to Delrin or Celcon) — AF

Flanged Type

ALL DIMENSIONS IN INCHES
ORDER BY CATALOG NUMBER OR ITEM CODE

A*	B*	C	D	E	Catalog Number	Item Code
3/8	5/8 3/4	1 1-1/2	7/8 1	1/16 1/16	FGS610-8 FAF610-8 FAF612-12	57577 57578 57585
7/16	3/4	1-1/2	1	1/16	FAF712-12	57586
1/2	5/8	1	7/8	1/16	FGS810-8 FAF810-8	57579 57580
	3/4	1-1/2 2	1	1/16	FAF812-12 FGS812-16	57587 57582
9/16	3/4	1-1/2 2	1	1/16	FAF912-12 FGS912-16	57588 57583
5/8	3/4	1-1/2 2 1-1/2	1	1/16	FGS1012-12 FGS1012-16 FAF1012-12	57589 57584 57590
3/4	1	1-1/2	1-1/4	1/8	FGS1216-12 FAF1216-12	57591 57592
1	1-1/4	2	1-1/2	1/8	FGS1620-16 FAF1620-16	57593 57594
1-1/2	1-3/4	1-1/2	2	1/8	FAF2428-12	57606

*Approx. dimensions. Actual size related to molding variations, however, wall thickness will be quite uniform making it practical to use these bearings for many applications.



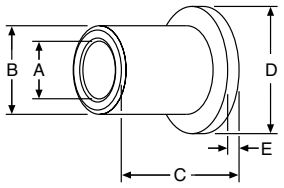

Material

Nylatron GS (Molybdenum disulfide filled nylon) — GS
Teflon filled Acetal (Teflon added to Delrin or Celcon) — AF

BOStonE Molded Plastic Bearings

Roll End Bearings for Steel Tubing



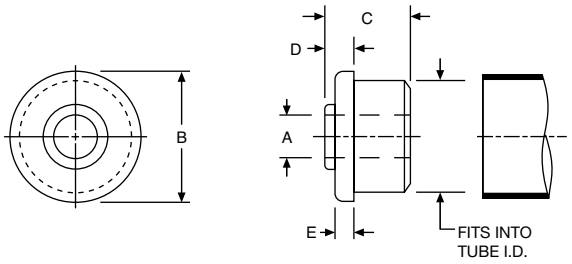

Material

Delrin or Celcon (Acetals) — D
Nylatron GS (Molybdenum disulfide filled nylon) — GS
Teflon filled Acetal (Teflon added to Delrin or Celcon) — AF

ALL DIMENSIONS IN INCHES
ORDER BY CATALOG NUMBER OR ITEM CODE †

B (Tube Size)	A*	C	D	E	Catalog Number	Item † Code
3/4 22 ga. .750 O.D. .694 I.D.	1/8	9/16	5/32	3/32	622D-1/8 622GS-1/8 622AF-1/8	56920 56923 56926
	3/16				622D-3/16 622GS-3/16 622AF-3/16	56921 56924 56927
	1/4				622D-1/4 622GS-1/4 622AF-1/4	56922 56925 56928
7/8 20 ga. — — .875 O.D. .805 I.D.	3/16	9/16	5/32	3/32	720D-3/16 720AF-3/16	56929
	1/4				720AF-1/4	
	3/8				720D-3/8 720AF-3/8	56931 —
1 18 ga. 1.000 O.D. .902 I.D.	1/4	9/16	3/16	1/8	818D-1/4 818GS-1/4	56938 56941
	3/8				818AF-1/4 818GS-3/8 818AF-3/8	56944 56942 56945
	1/2				818D-1/2 818GS-1/2 818AF-1/2	56940 56943 56946
1-1/4 16 ga. 1.250 O.D. 1.120 I.D.	1/4	5/8	3/16	1/8	1016D-1/4 1016GS-1/4 1016AF-1/4	56947 56950 56953
	3/8				1016D-3/8 1016GS-3/8 1016AF-3/8	56948 56951 56954
	1/2				1016D-1/2 1016GS/1/2 1016AF-1/2	56949 56952 56955
1-3/8 18 ga. 1.375 O.D. 1.277 I.D.	1/4	3/4	1/4	1/8	1118D-1/4 1118GS-1/4 1118AF-1/4	56956 56960 —
	5/16				1118D-5/16 1118GS-5/16 1118AF-5/16	56957 56961 —
	3/8				1118D-3/8 1118GS-3/8 1118AF-3/8	56958 56962 —
	1/2				1118D-1/2 1118GS-1/2 1118AF-1/2	56959 56963 —
1-1/2 16 ga. 1.500 O.D. 1.370 I.D.	1/4	7/8	5/16	3/16	1216D-1/4 1216GS-1/4 1216AF-1/4	56968 56972 56976
	3/8				1216D-3/8 1216AF-3/8	56969 56977
	1/2				1216GS-1/2 1216AF-1/2	56974 56978
	5/8				1216D-5/8 1216GS-5/8 1216AF-5/8	56971 56975 56979
3/8 1-1/2 EMT 1.740 O.D. 1.610 I.D.	1/4	1	5/16	3/16	12EMD-1/4 12EMGS-1/4 12EMAF-1/4	— — —
					12EMD-3/8 12EMGS-3/8 12EMAF-3/8	56981 — —
	1/2				12EMD-1/2 12EMGS-1/2 12EMAF-1/2	56982 56986 —
	5/8				12EMD-5/8 12EMGS-5/8 12EMAF-5/8	56983 56987 —

*These dimensions are approximately 1/64" larger than listed.

†Any item listed WITHOUT an Item Code Number is available on a SPECIAL ORDER BASIS and minimum quantities may apply.

BLIND BORE Bearings are available on special order — minimum quantities will apply.

Roll End Bearings for Steel Tubing

ALL DIMENSIONS IN INCHES
ORDER BY CATALOG NUMBER OR ITEM CODE †

B (Tube Size)	A*	C	D	E	Catalog Number	Item † Code
1-5/8 16 ga. 1.625 O.D. 1.495 I.D.	1/4	1	5/16	3/16	1316D-1/4 1316GS-1/4 1316AF-1/4	— 56996 —
	3/8				1316D-3/8 1316GS-3/8 1316AF-3/8	56993 56997 —
	1/2				1316D-1/2 1316GS-1/2 1316AF-1/2	56994 56998 —
	5/8				1316D-5/8 1316GS-5/8 1316AF-5/8	56995 56999 —
1-3/4 16 ga. 1.750 O.D. 1.620 I.D.	1/4	1	5/16	3/16	1416D-1/4 1416GS-1/4 1416AF-1/4	57070 57075 —
	3/8				1416D-3/8 1416GS-3/8 1416AF-3/8	57071 57076 —
	1/2				1416D-1/2 1416GS-1/2 1416AF-1/2	57072 57077 —
	5/8				1416D-5/8 1416GS-5/8 1416AF-5/8	57073 57078 57083
	3/4				1416D-3/4 1416GS-3/4 1416AF-3/4	57074 57079 57084
1-7/8 16 ga. 1.875 O.D. 1.745 I.D.	1/4	1	5/16	3/16	1516D-1/4 1516GS-1/4 1516AF-1/4	57085 57090 —
	3/8				1516D-3/8 1516GS-3/8 1516AF-3/8	57086 57091 —
	1/2				1516D-1/2 1516GS-1/2 1516AF-1/2	57087 57092 —
	5/8				1516D-5/8 1516GS-5/8 1516AF-5/8	57088 57093 —
	3/4				1516D-3/4 1516GS-3/4 1516AF-3/4	— 57094 —
2 18 ga. 2.000 O.D. 1.902 I.D.	1/4	1	5/16	3/16	1618D-1/4 1618GS-1/4 1618AF-1/4	57872 57877 —
	3/8				1618D-3/8 1618GS-3/8 1618AF-3/8	— — —
	1/2				1618D-1/2 1618GS-1/2 1618AF-1/2	57874 57879 —
	5/8				1618D-5/8 1618GS-5/8 1618AF-5/8	57875 57880 —
	3/4				1618D-3/4 1618GS-3/4 1618AF-3/4	57876 57881 —
2 16 ga. 2.000 O.D. 1.8701 I.D.	1/4	1	5/16	3/16	1616D-1/4 1616GS-1/4 1616AF-1/4	57100 57105 —
	3/8				1616D-3/8 1616GS-3/8 1616AF-3/8	57101 57106 —
	1/2				1616D-1/2 1616GS-1/2 1616AF-1/2	57102 57107 57112
	5/8				1616D-5/8 1616GS-5/8 1616AF-5/8	57103 57108 —
	3/4				1616D-3/4 1616GS-3/4 1616AF-3/4	57104 — —



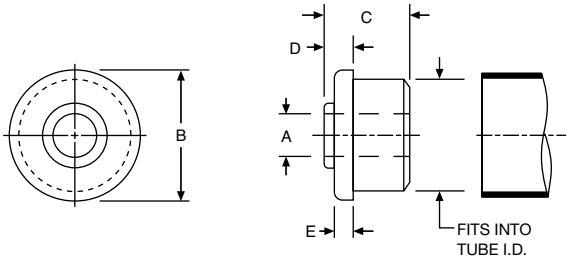

Material

Delrin or Celcon (Acetals) — D
Nylatron GS (Molybdenum disulfide filled nylon) — GS
Teflon filled Acetal (Teflon added to Delrin or Celcon) — AF

*These dimensions are approximately 1/64" larger than listed.

†Any item listed WITHOUT an Item Code Number is available on a SPECIAL ORDER BASIS and minimum quantities may apply.

BLIND BORE Bearings are available on special order — minimum quantities will apply.

BOStonE Molded Plastic Bearings

Roll End Bearings for Steel Tubing

F



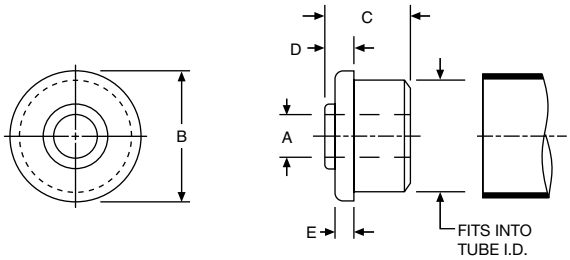

Material

Delrin or Celcon (Acetals) — D
Nylatron GS (Molybdenum disulfide filled nylon) — GS
Teflon filled Acetal (Teflon added to Delrin or Celcon) — AF

*These dimensions are approximately 1/64" larger than listed.

†Any item listed WITHOUT an Item Code Number is available on a SPECIAL ORDER BASIS and minimum quantities may apply.

BLIND BORE Bearings are available on special order — minimum quantities will apply.

ALL DIMENSIONS IN INCHES
ORDER BY CATALOG NUMBER OR ITEM CODE †

B (Tube Size)	A*	C	D	E	Catalog Number	Item † Code
2 EMT 2.190 O.D. 2.067 I.D.	1/4	1	5/16	3/16	16EMD-1/4	—
					16EMGS-1/4	—
					16EMAF-1/4	—
	3/8				16EMD-3/8	—
					16EMGS-3/8	—
					16EMAF-3/8	—
	1/2				16EMD-1/2	57117
					16EMGS-1/2	—
					16EMAF-1/2	—
	5/8				16EMD-5/8	57118
					16EMGS-5/8	—
					16EMAF-5/8	—
	3/4				16EMD-3/4	57119
					16EMGS-3/4	—
					16EMAF-3/4	—
2-1/4 18 ga. 2.250 O.D. 2.152 I.D.	1/4	1	5/16	3/16	1818D-1/4	—
					1818GS-1/4	57862
					1818AF-1/4	—
	3/8				1818D-3/8	—
					1818GS-3/8	—
					1818AF-3/8	—
	1/2				1818D-1/2	—
					1818GS-1/2	—
					1818AF-1/2	—
	5/8				1818D-5/8	—
					1818GS-5/8	—
					1818AF-5/8	—
	3/4				1818D-3/4	—
					1818GS-3/4	—
					1818AF-3/4	—
2-1/4 16 ga. 2.250 O.D. 2.120 I.D.	1/4	1	5/16	3/16	1816D-1/4	57130
					1816GS-1/4	—
					1816AF-1/4	—
	3/8				1816D-3/8	57131
					1816GS-3/8	57136
					1816AF-3/8	—
	1/2				1816D-1/2	57132
					1816GS-1/2	57137
					1816AF-1/2	—
	5/8				1816D-5/8	57133
					1816GS-5/8	—
					1816AF-5/8	—
	3/4				1816D-3/4	57134
					1816GS-3/4	—
					1816AF-3/4	—
2-1/2 18 ga. 2.500 O.D. 2.402 I.D.	1/4	1	5/16	3/16	2018D-1/4	—
					2018GS-1/4	—
					2018AF-1/4	—
	3/8				2018D-3/8	—
					2018GS-3/8	—
					2018AF-3/8	—
	1/2				2018D-1/2	—
					2018GS-1/2	—
					2018AF-1/2	—
	5/8				2018D-5/8	—
					2018GS-5/8	—
					2018AF-5/8	—
	3/4				2018D-3/4	—
					2018GS-3/4	—
					2018AF-3/4	—
2-1/2 16 ga. 2.500 O.D. 2.370 I.D.	1/4	1	5/16	3/16	2016D-1/4	57145
					2016GS-1/4	—
					2016AF-1/4	—
	3/8				2016D-3/8	—
					2016GS-3/8	—
					2016AF-3/8	—
	1/2				2016D-1/2	57147
					2016GS-1/2	57152
					2016AF-1/2	—
	5/8				2016D-5/8	57148
					2016GS-5/8	57153
					2016AF-5/8	—
	3/4				2016D-3/4	57149
					2016GS-3/4	57154
					2016AF-3/4	—

Roll End Bearings for Steel Tubing

ALL DIMENSIONS IN INCHES
ORDER BY CATALOG NUMBER OR ITEM CODE †

B (Tube Size)	A*	C	D	E	Catalog Number	Item † Code
2-3/4 16 ga. 2.750 O.D. 2.620 I.D.	1/4	1	5/16	3/16	2216D-1/4	57160
					2216GS-1/4	—
					2216AF-1/4	—
	3/8				2216D-3/8	57161
					2216GS-3/8	—
					2216AF-3/8	—
	1/2				2216D-1/2	57162
					2216GS-1/2	—
					2216AF-1/2	—
	5/8				2216D-5/8	57163
					2216GS-5/8	—
					2216AF-5/8	—
	3/4				2216D-3/4	—
					2216GS-3/4	—
					2216AF-3/4	—
3 16 ga. 3.000 O.D. 2.870 I.D.	3/8	1-1/2	3/8	3/16	2416D-3/8	57607
		1-1/2	3/8		2416GS-3/8	57611
		1-5/8	1/2		2416AF-3/8	57615
	1/2	1-1/2	3/8	3/16	2416D-1/2	57608
		1-1/2	3/8		2416GS-1/2	57612
		1-5/8	1/2		2416AF-1/2	57616
	5/8	1-1/2	3/8	3/16	2416D-5/8	57609
		1-1/2	3/8		2416GS-5/8	57613
	3/4	1-1/2	3/8	3/16	2416D-3/4	57610
		1-1/2	3/8		2416GS-3/4	57614
		1-5/8	1/2		2416AF-3/4	57618
3 11 ga. 3.000 O.D. 2.760 I.D.	3/8	1-1/2	3/8	3/16	2411D-3/8	57175
		1-1/2	3/8		2411GS-3/8	57179
		1-5/8	1/2		2411AF-3/8	57183
	1/2	1-1/2	3/8	3/16	2411D-1/2	57176
		1-1/2	3/8		2411GS-1/2	57180
		1-5/8	1/2		2411AF-1/2	57184
	5/8	1-1/2	3/8	3/16	2411D-5/8	57177
		1-1/2	3/8		2411GS-5/8	57181
		1-5/8	1/2		2411AF-5/8	57185
	3/4	1-1/2	3/8	3/16	2411D-3/4	57178
		1-1/2	3/8		2411GS-3/4	57182
		1-5/8	1/2		2411AF-3/4	57186
4 11 ga. 4.000 O.D. 3.760 I.D.	1/2	2	3/8	3/16	3211D-1/2	57187
		2	3/8		3211GS-1/2	57192
		2-1/8	1/2		3211AF-1/2	57197
	5/8	2	3/8	3/16	3211D-5/8	57188
		2	3/8		3211GS-5/8	57193
		2-1/8	1/2		3211AF-5/8	57198
	3/4	2	3/8	3/16	3211D-3/4	57189
		2	3/8		3211GS-3/4	57194
		2-1/8	1/2		3211AF-3/4	57199
	1	2	3/8	3/16	3211D-1	57190
		2	3/8		3211GS-1	57195
		2-1/8	1/2		3211AF-1	57200
	1-1/4	2	3/8	3/16	3211D-1-1/4	57191
		2	3/8		3211GS-1-1/4	57196
		2-1/8	1/2		3211AF-1-1/4	—
4-1/2 11 ga. 4.500 O.D. 4.260 I.D.	1/2	1-3/4	3/8	3/16	3611D-1/2	—
		1-3/4	3/8		3611GS-1/2	—
		1-7/8	1/2		3611AF-1/2	—
	5/8	1-3/4	3/8	3/16	3611D-5/8	—
		1-3/4	3/8		3611GS-5/8	—
		1-7/8	1/2		3611AF-5/8	—
	3/4	1-3/4	3/8	3/16	3611D-3/4	—
		1-3/4	3/8		3611GS-3/4	—
		1-7/8	1/2		3611AF-3/4	—
	1	1-3/4	3/8	3/16	3611GS-1	—
		1-7/8	1/2		3611AF-1	—
	1-1/4	1-3/4	3/8	3/16	3611D-1-1/4	—
		1-3/4	3/8		3611GS-1-1/4	—
		1-7/8	1/2		3611AF-1-1/4	—



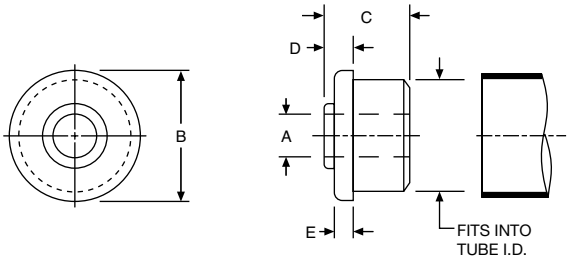

Material

Delrin or Celcon (Acetals) — D
Nylatron GS (Molybdenum disulfide filled nylon) — GS
Teflon filled Acetal (Teflon added to Delrin or Celcon) — AF

*These dimensions are approximately 1/64" larger than listed.

†Any item listed WITHOUT an Item Code Number is available on a SPECIAL ORDER BASIS and minimum quantities may apply.

AF Bearings with 3" or larger O.D. will be supplied with an AF Flanged bushing inserted into a D or GS Roll End Bearing. For these AF Bearings it is recommended to reduce the shaft diameter or increase bushing I.D. to obtain proper clearance.

BLIND BORE Bearings are available on special order. Minimum quantities will apply.

BOStonE Molded Plastic Bearings

Roll End Bearings for Steel Tubing and Standard Pipe



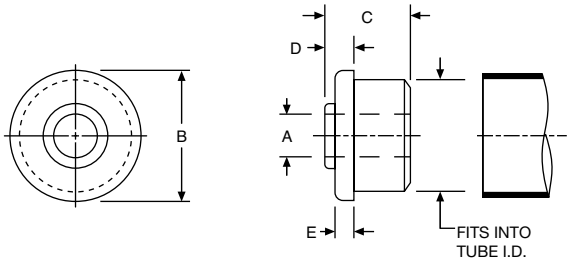

Material

Delrin or Celcon (Acetals) — D
Nylatron GS (Molybdenum disulfide filled nylon) — GS
Teflon filled Acetal (Teflon added to Delrin or Celcon) — AF

ALL DIMENSIONS IN INCHES
ORDER BY CATALOG NUMBER OR ITEM CODE †

B (Pipe Size)	A*	C	D	E	Catalog Number	Item † Code
1 Sch. 40 1.315 O.D. 1.049 I.D.	1/4	5/8	3/16	1/8	8P40D-1/4	57334
					8P40GS-1/4	57337
					8P40AF-1/4	—
	3/8				8P40D-3/8	57335
					8P40GS-3/8	57338
					8P40AF-3/8	—
	1/2				8P40D-1/2	57336
					8P40GS-1/2	57339
					8P40AF-1/2	—
1-1/2 Sch. 40 1.900 O.D. 1.610 I.D.	1/4	1	5/16	3/16	12P40D-1/4	57343
					12P40GS-1/4	57347
					12P40AF-1/4	57351
	3/8				12P40D-3/8	57344
					12P40GS-3/8	57348
					12P40AF-3/8	57352
	1/2				12P40D-1/2	57345
					12P40GS-1/2	57349
					12P40AF-1/2	—
	5/8				12P40D-5/8	57346
					12P40GS-5/8	57350
					12P40AF-5/8	57354
1-1/2 Sch. 80 1.900 O.D. 1.500 I.D.	1/4	1	5/16	3/16	12P80D-1/4	—
					12P80GS-1/4	—
					12P80AF-1/4	—
	3/8				12P80D-3/8	—
					12P80GS-3/8	—
					12P80AF-3/8	—
	1/2				12P80D-1/2	57663
					12P80GS-1/2	—
					12P80AF-1/2	—
	5/8				12P80D-5/8	57664
					12P80GS-5/8	—
					12P80AF-5/8	—
2 Sch.40 2.375 O.D. 2.067 I.D.	1/4	1	5/16	3/16	16P40D-1/4	57355
					16P40GS-1/4	—
					16P40AF-1/4	—
	3/8				16P40D-3/8	57356
					16P40GS-3/8	—
					16P40AF-3/8	—
	1/2				16P40D-1/2	57357
					16P40GS-1/2	57362
					16P40AF-1/2	—
	5/8				16P40D-5/8	57358
					16P40GS-5/8	57363
					16P40AF-5/8	—
	3/4				16P40D-3/4	57359
					16P40GS-3/4	57364
					16P40AF-3/4	—

*These dimensions are approximately 1/64" larger than listed.

†Any item listed WITHOUT an Item Code Number is available on a SPECIAL ORDER BASIS and minimum quantities may apply.

BLIND BORE Bearings are available on special order.
Minimum quantities will apply.

Roll End Bearings for Standard Steel Pipe

ALL DIMENSIONS IN INCHES
ORDER BY CATALOG NUMBER OR ITEM CODE †

B (Pipe Size)	A*	C	D	E	Catalog Number	Item Code †
2 Sch.10 2.375 O.D. 2.152 I.D.	1/4	1	5/16	3/16	16P10D-1/4	—
					16P10GS-1/4	—
					16P10AF-1/4	—
	3/8				16P10D-3/8	—
					16P10GS-3/8	—
					16P10AF-3/8	—
	1/2				16P10D-1/2	—
					16P10GS-1/2	—
					16P10AF-1/2	—
	5/8				16P10D-5/8	—
					16P10GS-5/8	—
					16P10AF-5/8	—
	3/4				16P10D-3/4	—
					16P10GS-3/4	—
					16P10AF-3/4	—
2 Sch.80 2.375 O.D. 1.939 I.D.	1/4	1	5/16	3/16	16P80D-1/4	—
					16P80GS-1/4	—
					16P80AF-1/4	—
	3/8				16P80D-3/8	—
					16P80GS-3/8	—
					16P80AF-3/8	—
	1/2				16P80D-1/2	57690
					16P80GS-1/2	57695
					16P80AF-1/2	—
	5/8				16P80D-5/8	57691
					16P80GS-5/8	—
					16P80AF-5/8	—
	3/4				16P80D-3/4	57692
					16P80GS-3/4	—
					16P80AF-3/4	—
2-1/2 Sch.40 2.875 O.D. 2.469 I.D.	1/4	1	5/16	3/16	20P40D-1/4	57370
					20P40GS-1/4	—
					20P40AF-1/4	—
	3/8				20P40D-3/8	57371
					20P40GS-3/8	—
					20P40AF-3/8	—
	1/2				20P40D-1/2	57372
					20P40GS-1/2	—
					20P40AF-1/2	—
	5/8				20P40D-5/8	57373
					20P40GS-5/8	—
					20P40AF-5/8	—
	3/4				20P40D-3/4	57374
					20P40GS-3/4	—
					20P40AF-3/4	—
3 Sch.40 3.500 O.D. 3.068 I.D.	3/8	1-1/4 1-1/4 1-3/8	3/8 3/8 1/2	3/16	24P40D-3/8	57385
					24P40GS-3/8	57390
					24P40AF-3/8	57395
	1/2	1-1/4 1-1/4 1-3/8	3/8 3/8 1/2	3/16	24P40D-1/2	57386
					24P40GS-1/2	57391
					24P40AF-1/2	57396
	5/8	1-1/4 1-1/4 1-3/8	3/8 3/8 1/2	3/16	24P40D-5/8	57387
					24P40GS-5/8	57392
					24P40AF-5/8	57397
	3/4	1-1/4 1-1/4 1-3/8	3/8 3/8 1/2	3/16	24P40D-3/4	57388
					24P40GS-3/4	57393
					24P40AF-3/4	57398
	1	1-1/4 1-1/4 1-3/8	3/8 3/8 1/2	3/16	24P40D-1	57389
					24P40GS-1	57394
					24P40AF-1	57399



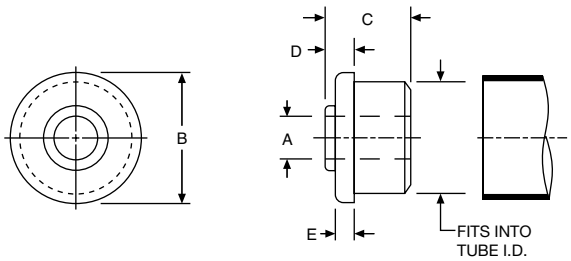

Material

Delrin or Celcon (Acetals) — D
Nylatron GS (Molybdenum disulfide filled nylon) — GS
Teflon filled Acetal (Teflon added to Delrin or Celcon) — AF

*These dimensions are approximately 1/64" larger than listed.

†Any item listed WITHOUT an Item Code Number is available on a SPECIAL ORDER BASIS and minimum quantities may apply.

AF Bearings with 3" or larger O.D. will be supplied with an AF Flanged bushing inserted into a D or GS Roll End Bearing. For these AF Bearings it is recommended to reduce the shaft diameter or increase bushing I.D. to obtain proper clearance.

BLIND BORE bearings are available on special order. Minimum quantities will apply.

BOStonE Molded Plastic Bearings

Roll End Bearings for Standard Steel Pipe



ALL DIMENSIONS IN INCHES
ORDER BY CATALOG NUMBER OR ITEM CODE †

B (Pipe Size)	A*	C	D	E	Catalog Number	Item † Code
4 Sch. 40 4.500 O.D. 4.026 I.D.	1/2	1-3/4	3/8	3/16	32P40D-1/2	57400
		1-3/4	3/8		32P40GS-1/2	57405
		1-7/8	1/2		32P40AF-1/2	57410
	5/8	1-3/4	3/8	3/16	32P40D-5/8	57401
		1-3/4	3/8		32P40GS-5/8	57406
		1-7/8	1/2		32P40AF-5/8	57411
	3/4	1-3/4	3/8	3/16	32P40D-3/4	57402
		1-3/4	3/8		32P40GS-3/4	57407
		1-7/8	1/2		32P40AF-3/4	57412
	1	1-3/4	3/8	3/16	32P40D-1	57403
		1-3/4	3/8		32P40GS-1	57408
		1-7/8	1/2		32P40AF-1	57411
	1-1/4	1-3/4	3/8	3/16	32P40D-1-1/4	57404
		1-3/4	3/8		32P40GS1-1/4	57409

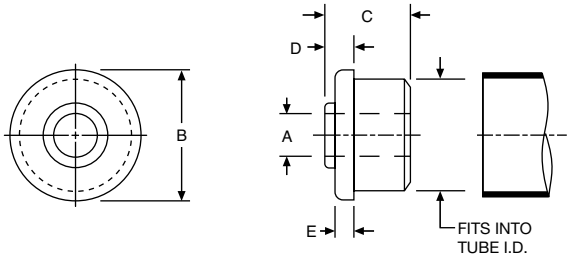

AF bearings with 3" or larger O.D. will be supplied with an AF Flanged bushing inserted into a D or GS Roll End Bearing. For these AF Bearings it is recommended to reduce the shaft diameter or increase bushing I.D. to obtain proper clearance.

BLIND BORE bearings are available on special order — minimum quantities will apply.

Material

Delrin or Celcon (Acetals) — D
Nylatron GS (Molybdenum disulfide filled nylon) — GS
Teflon filled Acetal (Teflon added to Delrin or Celcon) — AF

*These dimensions are approximately 1/64" larger than listed.

†Any item listed WITHOUT an Item Code Number is available on a SPECIAL ORDER BASIS – minimum quantities may apply.

Extra Length – Blind Bore Bearing Inserts

Extra length Blind Bore inserts are available for Roll End Bearings from 1-3/4" to 6" outside diameter. All Blind Bore Bearing inserts listed below are made from Nylatron GS and are designed to press fit into 3/4" I.D. Roll End Bearings.



ALL DIMENSIONS IN INCHES
ORDER BY CATALOG NUMBER OR ITEM CODE

Roll End Brg. Bore	A*	B	C	Max. Depth	D	Catalog Number	Item Code
3/4	7/16 1/2 9/16 5/8	1	1-1/2	1-3/8	1/16	F7612B F8612B F9612B F10612B	57482 57483 57484 –
3/4	7/16 1/2 9/16 5/8	1	2	1-7/8	1/16	F7616B F8616B F9616B F10616B	57486 57487 57488 57489

* These dimensions are approximately 1/64" larger than listed.

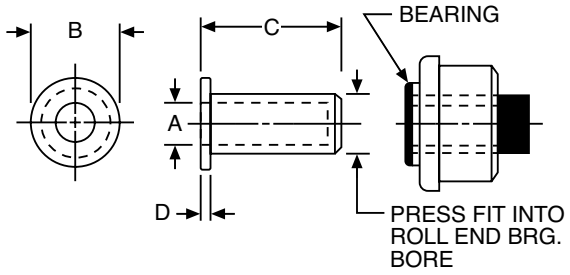

Roll End Adapter for Hex Shaft

Hex shaft adapter bushings are available for Roll End Bearings from 1" to 6" outside diameter. All hex shaft adapter bushings are made from Nylatron GS and are designed to provide a running fit with the Roll End Bearing bores listed below.



ALL DIMENSIONS IN INCHES
ORDER BY CATALOG NUMBER OR ITEM CODE

A Hex Shaft Size	Roll End Brg. Bore +	B	C	D	Catalog Number	Item Code
5/16	1/2	3/4	7/8	1/16	FH547	57479
7/16	5/8	7/8	1	1/16	FH758	57481
5/8	7/8*	1-1/8	1-1/4	3/32	FH10710	57707
11/16	7/8*	1-1/8	1-1/4	3/32	FH11710	57708

*7/8" I.D. Roll End Bearings are not available from stock. They may be machined from any 3/4" bore size. Prices on application.

+I.D. of "AF" Roll End bearings may have to be enlarged approximately 1/64" to obtain proper clearance.

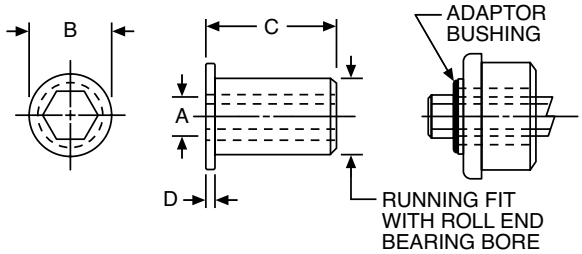

BOStonE Molded Plastic Bearings

Guide Roll Bearings



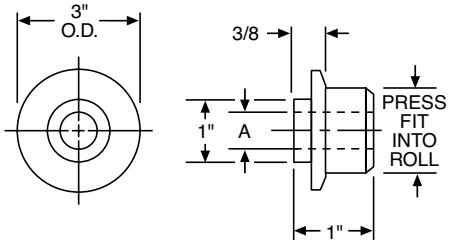

Nylatron GS Roll End Bearing has an oversized flange. Designed for use as a belt guide on conveyor rollers, or on light duty trolley conveyors. Using 2" 16 Gage Tubing.

Material

Nylatron GS (Molybdenum disulfide filled nylon) — GS

ALL DIMENSIONS IN INCHES
ORDER BY CATALOG NUMBER OR ITEM CODE

A	Catalog Number	Item Code
1/2	G1616GS-1/2	57704
5/8	G1616GS-5/8	57706

Also suitable to take 5/16, 3/8 and 7/16" hex shaft bushing.

Rollers



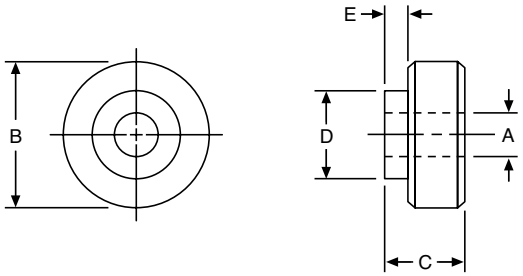

Material

Delrin or Celcon (Acetals) — D
Nylatron GS (Molybdenum disulfide filled nylon) — GS

*These dimensions are approximately 1/64" larger than listed.

These rollers are made from roll end bearings shown on pages 162 through 168. (Ribbed Construction)

ALL DIMENSIONS IN INCHES
ORDER BY CATALOG NUMBER OR ITEM CODE

B	A*	C	D	E	Made From Cat. No.	Catalog Number	Item Code
.700	1/8	9/16	1/2	1/16	622D-1/8 622GS-1/8	R700D R700GS	57492 57493
.800	3/16	9/16	5/8	1/16	720D-3/16 720GS-3/16	R800D R800GS	57494 57495
.900	1/4	9/16	5/8	1/16	818D-1/4 818GS-1/4	R900D R900GS	57496 57497
1.120	3/8	5/8	5/8	1/16	1016D-3/8 1016GS-3/8	R1120D R1120GS	57498 57499
1.370	1/2	7/8	7/8	1/8	1216D-1/2 1216GS-1/2	R1370D R1370GS	57500 57501
1.500	1/2	1	1	1/8	1316D-1/2 1316GS-1/2	R1500D R1500GS	57502 57503
1.620	1/2	1	1	1/8	1416D-1/2 1416GS-1/2	R1620D R1620GS	57504 57505
1.870	1/2	1	1	1/8	1616D-1/2 1616GS-1/2	R1870D R1870GS	57506 57507
2.120	1/2	1	1	1/8	1816D-1/2 1816GS-1/2	R2120D R2120GS	57508 57509
2.370	1/2	1	1	1/8	2016D-1/2 2016GS-1/2	R2370D R2370GS	57510 57511
2.750	3/4	1-1/2	1-1/2	3/16	2411D-3/4 2411GS-3/4	R2750D R2750GS	57512 57513
3.000	3/4	1-1/4	2	3/16	24P40D-3/4 24P40GS-3/4	R3000D R3000GS	57514 57515
3.750	1	2	2	3/16	3211D-1	R3750D	57516
4.250	1	1-3/4	2	3/16	3611D-1	R4250D	57518

Shaft Clip

Secures round shaft to conveyor frame. Shaft can't turn or slide out. Clip required on one end only, conventional cotter pin can be used on other end.

Available from stock for 1/2" dia. shaft.

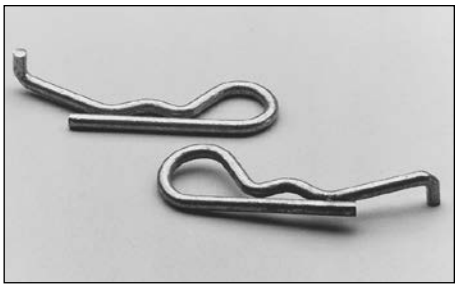

ORDER BY CATALOG NUMBER OR ITEM CODE

Catalog Number	Item Code
SC-4	57490

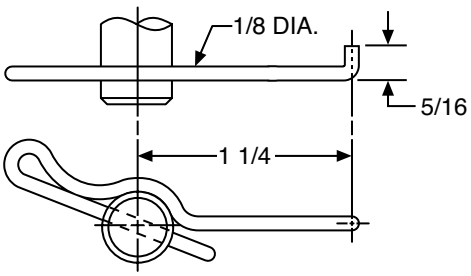

Stub Shaft for Rollers

This stainless steel screw and stub assembly fits Blind Bore Roll End Bearings.

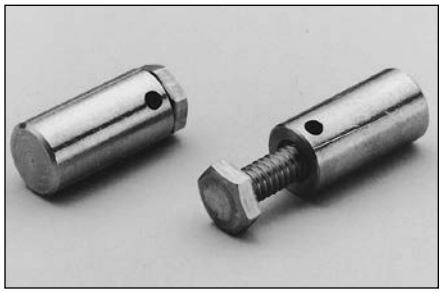

ORDER BY CATALOG NUMBER OR ITEM CODE

Catalog Number	Item Code
SS-4	57491

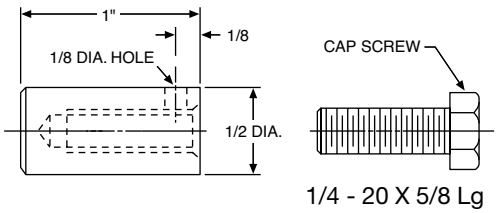

1/4 - 20 X 5/8 Lg

BOStonE Molded Nylon Bearings

Plain Cylindrical Bearings

F

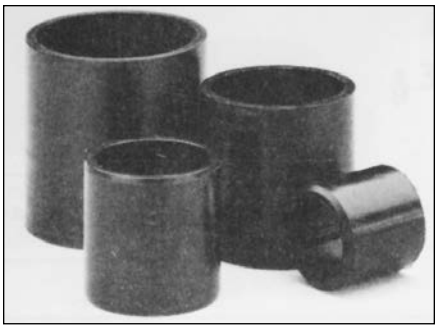

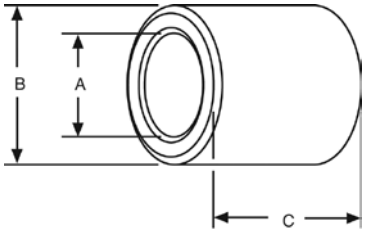

ALL DIMENSIONS IN INCHES
ORDER BY CATALOG NUMBER OR ITEM CODE

A	B	C	Catalog Number	Item Code
3/16	5/16	5/16	NS35-2-1/2	56883
1/4	3/8	3/8	NS46-3	56884
5/16	7/16	7/16	NS57-3-1/2	56885
3/8	1/2	1/2	NS68-4	56886
7/16	9/16	9/16	NS79-4-1/2	56887
1/2	5/8	5/8	NS810-5	56888
9/16	11/16	11/16	NS911-5-1/2	56889
5/8	3/4	3/4	NS1012-6	56890
11/16	13/16	13/16	NS1113-6-1/2	56891
3/4	7/8	7/8	NS1214-7	56892
7/8	1	1	NS1416-8	56894
15/16	1-1/16	1-1/16	NS1517-8-1/2	56895
1	1-1/8	1-1/8	NS1618-9	56896

STANDARD TOLERANCES

DIMENSIONS		TOLERANCE
A B	All	± .015
C	All	± .015

Flanged Type



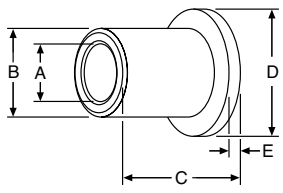

ALL DIMENSIONS IN INCHES
ORDER BY CATALOG NUMBER OR ITEM CODE

A	B	C	D	E	Catalog Number	Item Code
3/16	5/16	5/16	7/16	1/16	NF35-2-1/2	56897
1/4	3/8	3/8	1/2	1/16	NF46-3	56898
5/16	7/16	7/16	9/16	1/16	NF57-3-1/2	56899
3/8	1/2	1/2	5/8	1/16	NF68-4	56900
1/2	5/8	5/8	3/4	1/16	NF810-5	56902
9/16	11/16	11/16	15/16	1/16	NF911-5-1/2	56903
5/8	3/4	3/4	7/8	1/16	NF1012-6	56904
11/16	13/16	13/16	1	1/16	NF1113-6-1/2	56905
3/4	7/8	7/8	1-1/16	1/16	NF1214-7	56906
7/8	1	1	1-3/16	1/16	NF1416-8	56908
15/16	1-1/16	1-1/16	1-1/4	1/16	NF1517-8-1/2	56909
1	1-1/8	1-1/8	1-5/16	1/16	NF1618-9	56910

STANDARD TOLERANCES

DIMENSIONS		TOLERANCE
A B D E	All	± .015
C	All	± .015

Thrust Type

ALL DIMENSIONS IN INCHES
ORDER BY CATALOG NUMBER OR ITEM CODE

A	B	C	Catalog Number	Item Code
3/16 .189	3/4 .750	1/16 .070	NT312	56911
1/4 .255	5/8 .620	3/32 .097	NT410	56912
1/2 .503	13/16 .820	3/32 .095	NT813	56913
9/16 .565	13/16 .812	3/32 .095	NT913	56914
5/8 .630	1 1.000	3/32 .094	NT1016	56915
3/4 .760	1-1/16 1.063	3/32 .094	NT1217	56916
7/8 .890	1-1/8 1.125	3/32 .094	NT1418	56917
1-1/4 1.290	2-1/8 2.140	3/32 .098	NT2034	56918
1-1/2 1.555	2-1/16 2.058	1/8 .120	NT2533	56919

Tolerances apply to actual (decimal) dimensions.



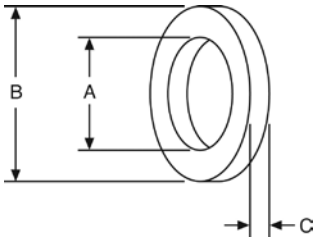

STANDARD TOLERANCES

DIMENSIONS		TOLERANCE
A B C	All	± .015

Cable Pulleys

ALL DIMENSIONS IN INCHES
ORDER BY CATALOG NUMBER OR ITEM CODE

A	C	G	F	H	J	Cable Size	Catalog Number	Item Code
1-1/4	1/4	.400		1/2	31/32	1/4	P1250-2	57522
2-5/8	3/8	.500	017	3/4	2-1/8	1/4	P2625-3	57525
2-5/8	1/2	.500	—	3/4	2-1/8	1/4	P2625-4	57526

STANDARD TOLERANCES

DIMENSIONS		TOLERANCE
C	All	+ .005 to + .010



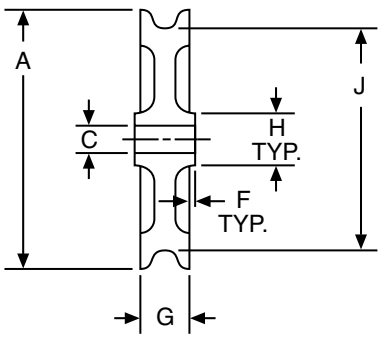

Sleeve Bearing Selection

The performance of a bearing is influenced by the conditions of speed, mating materials, clearances, temperature, lubrication, type of loading, etc. Of primary importance, is the maintenance of an oil film between the bearing surfaces to reduce friction, dissipate heat and retard wear by minimizing metal to metal contact. The most critical periods of operation are during starting and stopping, when the load may cause the bearing surfaces to come into contact with each other. For these reasons it is not practical to predict the wear rate of bronze bearings.

The selection of the best bearing for an application can be a very complicated problem because the combined influence of the many factors affecting the operation is difficult to predict.

The following information may be used as a guide for selecting a Bronze sleeve bearing which should satisfy the requirements.

For practical reasons, the length of the bearing should normally be between one and two times the shaft diameter and the O.D. approximately 25% larger than the shaft diameter.

Starting and Stopping/
Oscillatory Motion/Cyclical Overload conditions mean a full film of oil cannot be maintained. When this happens, metal-to-metal contact occurs and causes bearing wear. Because of the continual interruption of the oil film, a larger safety factor is required when designing bearings for applications of this type. A lower permissible PV factor must be considered.

Speed/Oil Viscosity must also be considered. The proper viscosity oil must be selected for each particular speed application, to achieve optimum bearing operation.

For high speed applications, a light oil (150 SUS at 100°F) is required to keep internal oil friction at a minimum and assure proper metering of the oil to the bearing/shaft surface.

For moderate speeds, a medium-viscosity oil (400 SUS at 100°F) is required.

For very low shaft speeds under moderate or heavy loads, a heavier oil with an extreme pressure additive may be required to prevent complete oil film rupture and give sufficient lubrication for proper operation.

Shaft Consideration is extremely important in bearing applications. For optimum operation the shaft must be of proper material, hardness, surface finish, roundness and dimensions. Experience indicates that carbon steels, and preferably C1137, offer the best operating results. If stainless steel shafts are to be used, 400 Series is recommended. Austenitic 300 Series stainless steel tends to gall, which results in extreme wear and shortened life. If 300 Series stainless is required for its non-magnetic qualities, it is strongly recommended that shafts be work-hardened or chrome-plated for satisfactory operation.

For best results, a shaft surface finish of 4 to 12 RMS is recommended. Nicks, gouges, and burrs should be avoided because they rupture the oil film and cause metal-to-metal contact.

Shaft roundness and dimensions also contribute greatly to bearing life. The more round the shaft, the less the bearing and shaft wear, with longer life resulting. Dimensions also play an important role in operation and should always be in accord with the recommended bearing clearance charts.

As stated, for practical reasons the bearing length should normally be between one and two times the shaft diameter. However, the recommended practice is by using the PV factor. PV is a means of measuring the performance capabilities of bearings. P is expressed as pressure or pounds per square inch on the projected area of the bearing. V is velocity in feet per minute of the wear surface (surface feet per minute).

"**PV**" is expressed by the following:

$$\mathbf{PV} = \frac{W}{Ld} \times \frac{\pi dn}{12} = \frac{\pi Wn}{12L} = \frac{.262Wn}{L}$$

$$\mathbf{P} = \frac{W}{A\ (\text{Brg. I.D.} \times \text{Length})}$$

V = Surface velocity of the shaft, ft./min. (.262 x RPM x Shaft Dia.)

W = Bearing load in pounds

L = Bearing length in inches

d = I.D. of bearing in inches (cancels out of formula)

n = Shaft speed, RPM

Sleeve Bearing Selection (Continued)

Each material has a specific maximum PV rating, as shown in the following Table. In addition, it also has a maximum pressure (P) and velocity (V) limitation. These values should not be exceeded. At no time can all maximum values be utilized.

Material	Max. PV	Max. P	Max. V
BEAR-N-BRONZ	75,000	3,000	750
BOST-BRONZ	50,000	2,000	1,200
BOST-BRONZ (Thrust Washers)	10,000	2,000	1,200
F1	20,000	1,000	400
TN	10,000	800	300
AF	8,000	750	300
GS	4,000	500	300
D	3,000	480	300
N	3,000	480	300
UHMW-PE	2,300	1,400	100
Nyloil	16,000	2,000	400
UHMW-PE with Internal Wear Strip	4,000	1,400	100
Nyloil with Internal Wear Strip	16,000	2,000	400

All values based on 72°F ambient temperature and standard lubricant, when required.

NOTE: Above figures should be considered maximum and not to be exceeded.

EXAMPLE

Select a BOST-BRONZ (oil impregnated) bearing to satisfy the following conditions.

Known—

5/8" Shaft Diameter

n = 500 RPM

W_1 = Load Bearing I = L_I = 52.5 Lbs.

W_2 = Load Bearing II = L_{II} = 157.5 Lbs.

L = Length of Bearing

For Bearing I—

$$PV = \frac{.262 \times W_1 \times n}{L \text{ (In. of Lgth)}}$$

$$= \frac{.262 \times 52.5 \times 500}{1}$$

$$= 6877$$

For Bearing II—

$$PV = \frac{.262 \times W_2 \times n}{L \text{ (In. of Lgth.)}}$$

$$= \frac{.262 \times 157.5 \times 500}{1}$$

$$= 20632$$

With the calculated PV of 6877, Bearing I, and 20,632, Bearing II, it can be seen from the Table, that a BOST-BRONZ bearing, one inch long, will not exceed Maximum PV.

NOTE: An increase in L will decrease the value of PV; conversely, a shortening of L increases the value of PV.

A check of PV calculations should now be performed to assure that Max. "P" and Max. "V" is not exceeded.

PV Max. = P Max. x V Max.

V = .262 x Shaft Dia. x n

= .262 x .625 x 500 = 81.9

Bearing I $P = \frac{PV}{V} = \frac{6877}{81.9} = 83.9$

Bearing II $P = \frac{PV}{V} = \frac{20632}{81.9} = 251.9$

As can be seen, we have not exceeded any maximum values. We can now select an actual Bost-Bronz bearing.

Knowing:

Shaft Dia. 5/8" = Bearing I.D. 5/8"

Bearing O.D. should be approximately 25% larger than I.D.

Bearing O.D. = .625 x 1.25 = .781"

Referring to Bost-Bronz listings, Page 12, we find 5/8" I.D. bearings listed with O.D.'s from 3/4 to 1" and lengths from 1/2 to 2".

From this selection of bearings, we may choose a bearing to fit the requirements.

Since Bearing I is lightly loaded, for practical reasons, we select a bearing length of one times bearing I.D. We select a B1013-5 (5/8" I.D. x 13/16 O.D. x 5/8" long).

Sleeve Bearing Selection (Continued)

EXAMPLE (Continued):

For Bearing II we will select a length of two times bearing I.D. — B1013-10. (In actual practice, it may be more suitable to select one common size — B1013-10.)

For a double-check of PV, we should use actual bearing selected:

$$\text{PV Actual} = \frac{\text{PV}}{\text{L (Actual Bearing)}}$$

$$\text{Bearing I PVA} = \frac{6877}{.625} = 10043$$

$$\text{Bearing II PVA} = \frac{20632}{1.25} = 16505$$

Actual PV values are below Maximum PV values shown in Table.

Sleeve Bearing Wear Life

Wear life cannot be applied to BOST-BRONZ (oil-impregnated) or BEAR-N-BRONZ (SAE CA932/660) bearings. Under ideal conditions the shaft rides on a film of oil, and will give almost infinite life. If this film of oil is disrupted, intimate metal-to-metal contact results leading to eventual failure.

Non-Metallic and Non-Lubricated Bearings

Wear rate is generally defined as the volumetric loss of material over a unit of time. Several mechanisms operate simultaneously to remove material from the wear interface, however, the primary mechanism is adhesive wear which is characterized by fine particles of polymer being removed from the surface. The presence of this powder is a good indication that the rubbing surfaces are wearing properly. The presence of melted polymer or large gouges or grooves at the interface is normally an indication that the materials are abrading and wearing and/or the pressure velocity limits of the materials are being exceeded.

Once a Wear Rate factor (K) has been established it can be used by the engineer to calculate wear rates of bearings, gears, etc. However, because wear rates is affected by material types, finishes and hardness as well as environmental temperature and part design, large errors may result as end use variables begin to differ from those selected for the test procedure.

As a relative measure of the performance of one composite vs. another at the same operating conditions, the K factors have proven to be highly reliable.

t = K (PVT)

t = Wear in inches

$$P = \frac{\text{W (Total Load)}}{\text{A (Brg. I.D. x Lgth.)}}$$

V = Velocity in ft. per minute
(.262 x RPM x Shaft Dia.)

$$T = \frac{t}{KPV}$$

T = Running time in hours

K = Wear rate factor

		K
Delrin or Celcon	(D)	50×10^{-10}
Nylatron GS . . .	(GS)	35×10^{-10}
Teflon filled Acetal	(AF)	17×10^{-10}
Teflon filled Nylon	(TN)	13×10^{-10}
Glass Filled Teflon	(F-1)	12×10^{-10}
Nylon		12×10^{-10}

Values for plastic resins assume no trace of lubricant present.

A simple calculation could be made as follows:

Assumptions:
1. 1616D-1/2 Delrin Roll End Bearing
2. .020 inch allowable wear limit
3. 50 lbs. load on roll (25 lbs. per bearing)
4. 100 RPM
5. Normal environment with no lubrication

Problem: Find estimated wear life

Solution:

$$PV = \frac{\pi Wn}{12L} = \frac{\pi \times 25 \times 100}{12 \times 1} = 655$$

$$t = K(PVT)$$

$$T = \frac{t}{KPV} \text{ or } \frac{.020}{50 \times 10^{-10}} \times 655$$

$$T = 6100 \text{ hrs.}$$

The use of low viscosity lubricant applied initially and/or periodically during operation of the bearing would extend the life several times.

BostonE F-1 material is generally limited to a bearing maximum of 1,000 p.s.i. For more detailed design calculations Fig. 2 shows actual deformation values as a function of temperature and load.

The coefficient of friction of BostonE F-1 varies with changes in load and speed when operated dry. Figure 3 shows the variation with load and Figure 4 shows the variation with speed.

Sleeve Bearing Wear Life (Continued)

For optimum performance of BostonE F-1 bearings, the mating surface should be as hard as possible. Mild steel, however, will give satisfactory results.

A surface finish range of 8-16 micro-inches is preferred; however, good results will be obtained with finishes to 32 micro-inches.

Figures 1 through 6 apply to BostonE F-1 material only.

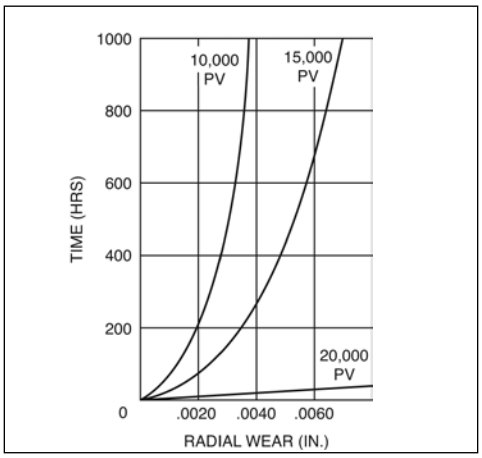

FIGURE 1 — TIME VS. RADIAL WEAR (UNLUBRICATED)

Load (psi)	Deformation (%)	
	78°F	300°F
250	.1	.4
500	.3	1.4
750	.5	2.9
1000	.8	—
1250	1.1	—
1500	1.6	—

FIGURE 2 — DEFORMATION UNDER LOAD

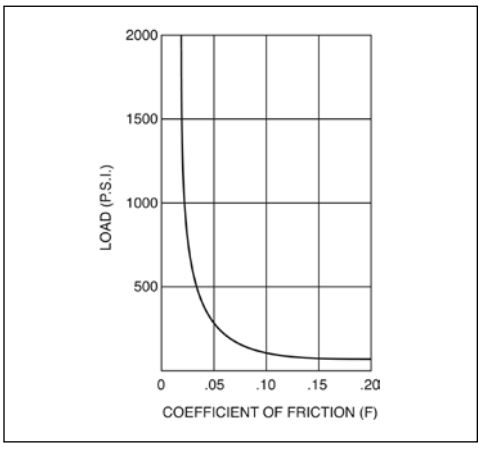

FIGURE 3 — LOAD VS. FRICTION

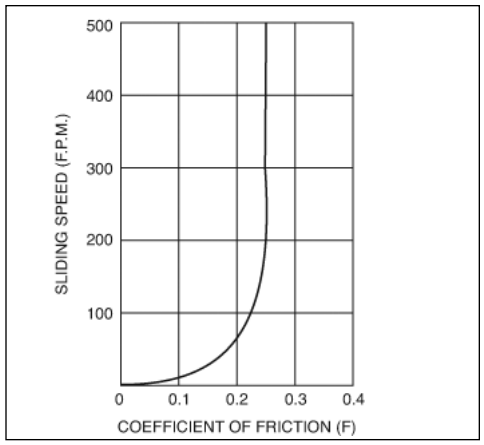

FIGURE 4 — SPEED VS. FRICTION

Coefficient of Friction

Shaft Material	
Hardened Steel	0.15
Stainless Steel	0.15
Chromium Plated Steel	0.16
Cast Iron	0.19
Hard Anodized Aluminum	0.20
Monel	0.23
Cold Rolled Steel	0.25
*Brass	0.33
*Aluminum	0.35

*High rate of shaft wear

FIGURE 5 — EFFECT OF MATING SURFACES WITH BOSTONE F-1

Coefficient of Expansion

Temperature Range	C.D. (all values are x 10^{-5})	M.D.
+68°F. to – 400°	–1.8	–3.5
+68°F. to – 300°	–2.3	–4.0
+68°F. to – 200°	–2.9	–4.3
+68°F. to – 100°	–3.5	–4.8
+68°F. to 0°	–4.4	–5.9
+68°F. to +78° (approximate data)	12	25
+78°F. to +100°	3.5	6.0
+78°F. to +200°	3.5	6.2
+78°F. to +300°	3.6	7.0
+78°F. to +400°	4.2	7.8
+78°F. to +500°	5.0	8.5

M.D. = Molded Direction (parallel to length of molded or extruded rod or tube)

C.D. = Cross Direction (perpendicular to length of molded or extruded rod or tube)

All tubes are approximately ± 5%.

FIGURE 6 — COEFFICIENT OF LINEAR THERMAL EXPANSION

F

Lubrication – BOST-BRONZ

All standard BOST-BRONZ bearings, bars and plates are impregnated with a high grade, oxidation-resistant mineral oil of SAE30 (ISO 100) viscosity. If properly stored, BOST-BRONZ parts retain their oil supply indefinitely. To prevent loss of lubricant, BOST-BRONZ should be stored in non-absorbent materials (metal, plastic, or suitably lined containers, etc.) The bearings should be covered to keep out dirt and dust.

REMOVING LUBRICANT: If it becomes necessary to remove the oil from BOST-BRONZ, for example to replace with another type or viscosity of lubricant, the following procedure may be used:

Immerse parts in a good grade of oil solvent, such as lead-free gasoline, naptha, carbon tetrachloride or alcohol. Change solvent often, until solvent appears clear. Agitation will hasten the process.

RE-OILING: BOST-BRONZ parts may be re-impregnated by submerging in oil (pre-heated to about 150°F) for approximately 30 minutes. More time should be allowed for larger parts.

Supplementary Lubrication

The following designs illustrate simple, effective arrangements for providing supplementary lubrication.

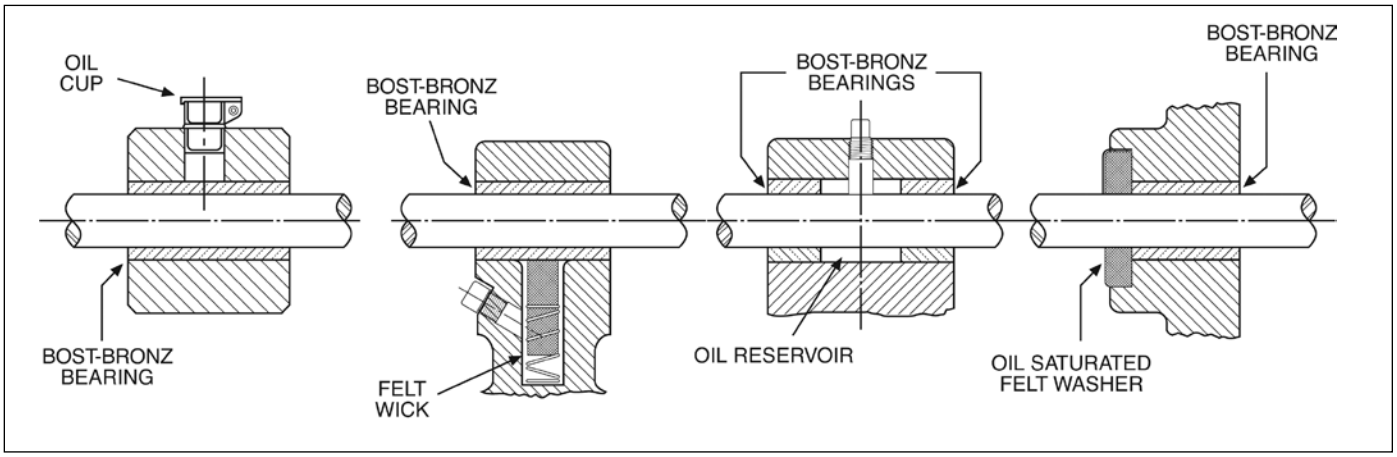

Lubrication – BEAR-N-BRONZ

The maintenance of an oil film between the shaft and bearing surfaces is extremely important, serving to reduce friction, dissipate heat, and retard wear by minimizing any metal to metal contact.

Lubricant is usually supplied into the bearing from an oil cup or fitting through an oil hole.

The drawings below illustrate two typical methods.

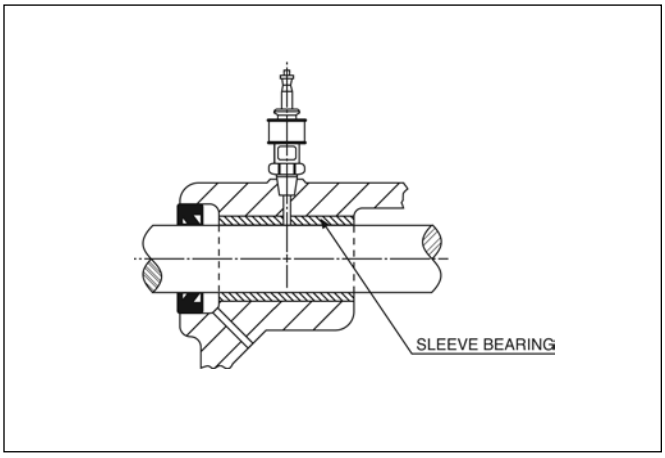

A. Oil Cup

Oil is fed from the oil cup to the bearing by gravity.

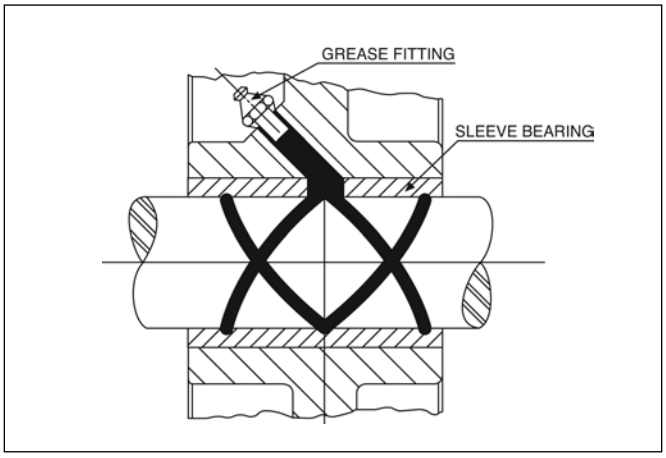

B. Oil or Grease Fitting

Lubricant is fed through the fitting under pressure and distributed through grooves by the rotation of the shaft.

Grooving

1. An oil feeder hole is normally sufficient for small bearings under light loads.

The oil hole should be in a position to introduce the lubricant to the non-loaded area of the bearing. The lubricant will then normally be carried to the loaded area by the rotation of the shaft.

For larger bearings under heavy loads, it may be desirable to facilitate the flow of lubricant to the pressure area by means of grooves machined into the bearing surface.

2. Type I or Type II grooves have proven adequate for most applications requiring an oil groove. In either case, the oil feed hole introducing the lubricant should always be located in the unloaded bearing area.

3. Very long bearings may require two feeder holes connected by one straight (axial) groove.

4. Oil grooves should stop short of the bearing ends to minimize oil leakage.

5. Grease lubricants are normally restricted to applications subjected to heavy loads at low speeds. Grease should be distributed under pressure along oil grooves to the loaded area. Type VI or Type VII grooves may be used for grease lubrication.

Below are illustrations of some popular styles of oil grooves:

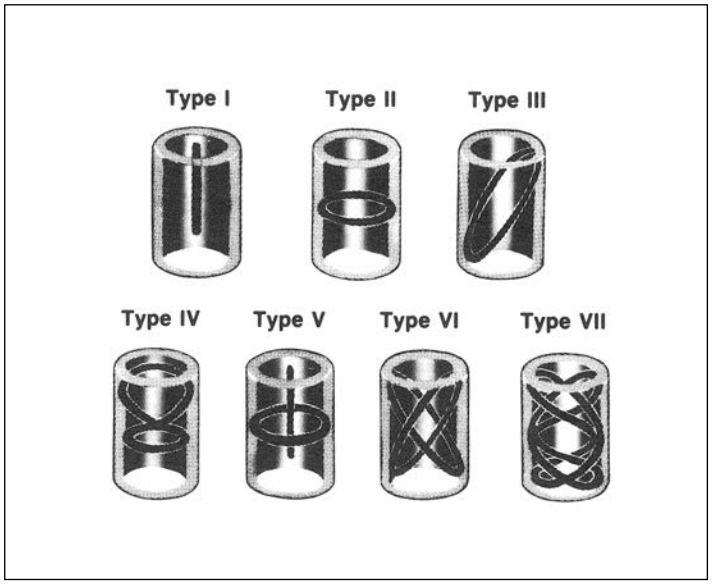

Depth of oil groove is 1/8” max. if wall permits. On thin wall bearings depth of groove is normally less than 1/2” wall thickness. When applicable groove is located 1/8” from ends.

Shaft Clearances

The following graphs may be used as a guide to determine shaft clearance for proper running fit.

BOST-BRONZ

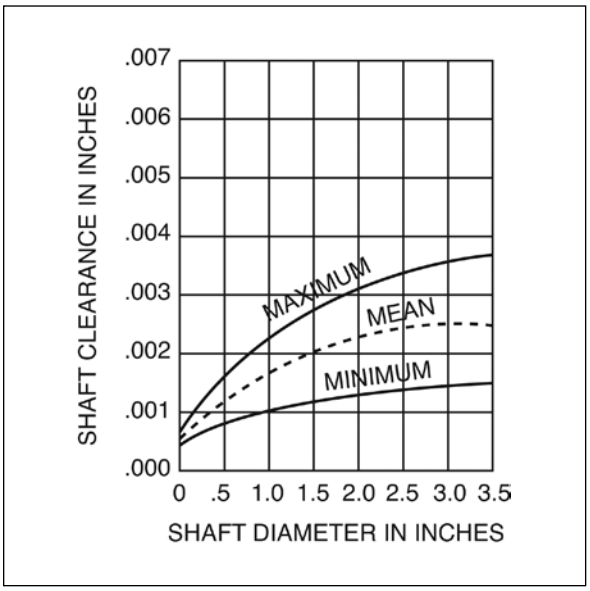

BEAR-N-BRONZ

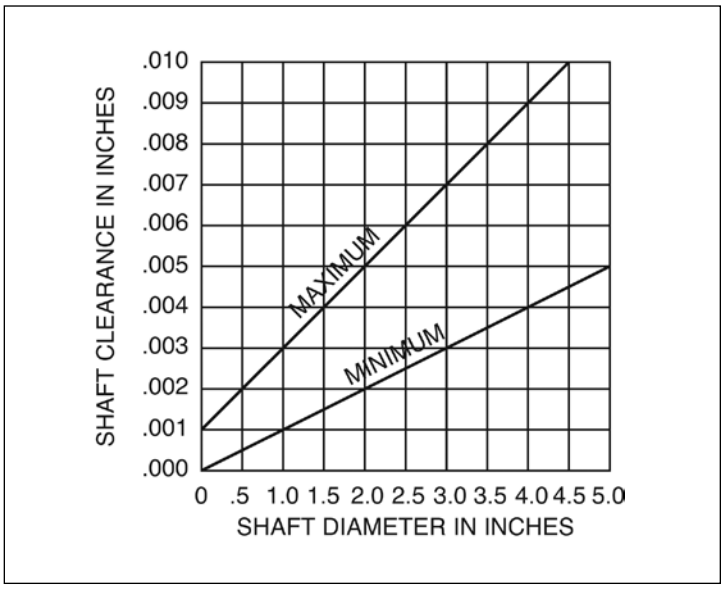

Plastics

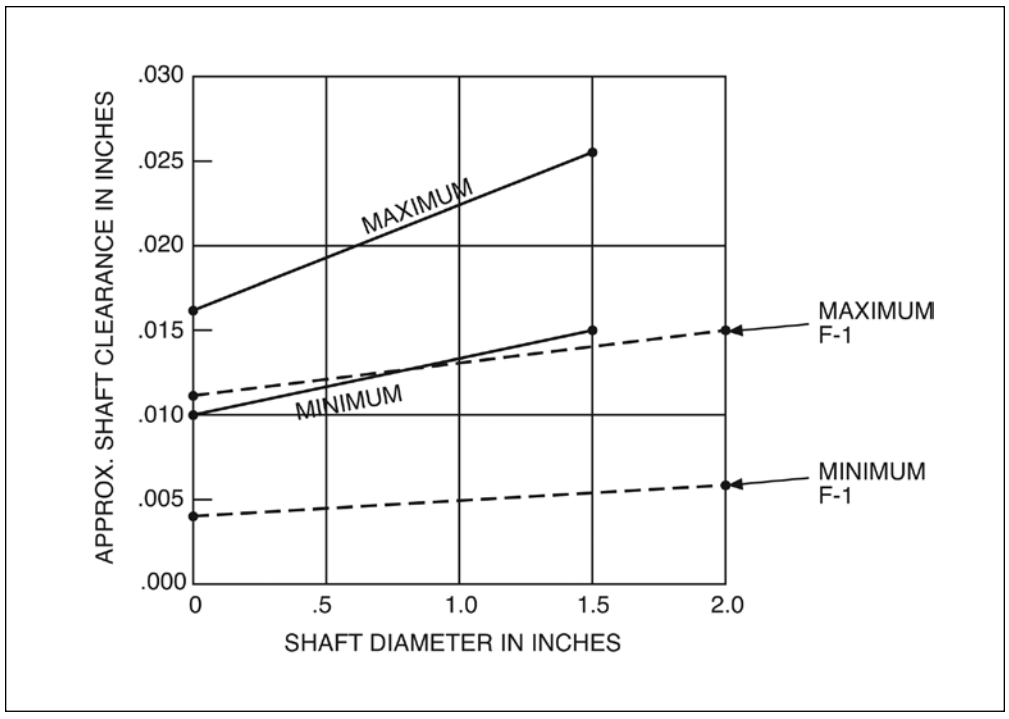

The allowance for press fit into a housing will vary depending upon bearing size, wall thickness, housing material, and housing construction. The accompanying graphs will be a useful guide in determining allowances for press fits.

BEAR-N-BRONZ

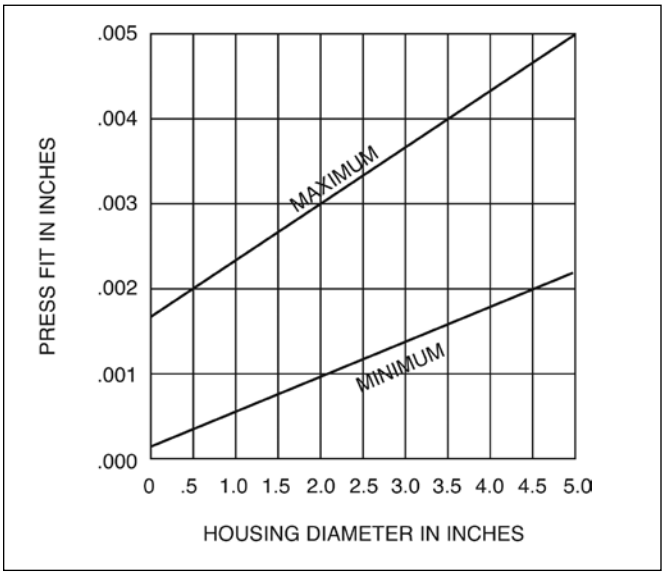

Plastics

Due to normal variations in molded bearings, practicality dictates the measuring of actual bearing O.D. and adjusting bore size accordingly.

For this reason, the minimum required press fit depicted in graph, for F-1 material and other plastic material is approximate and may be used as a guide.

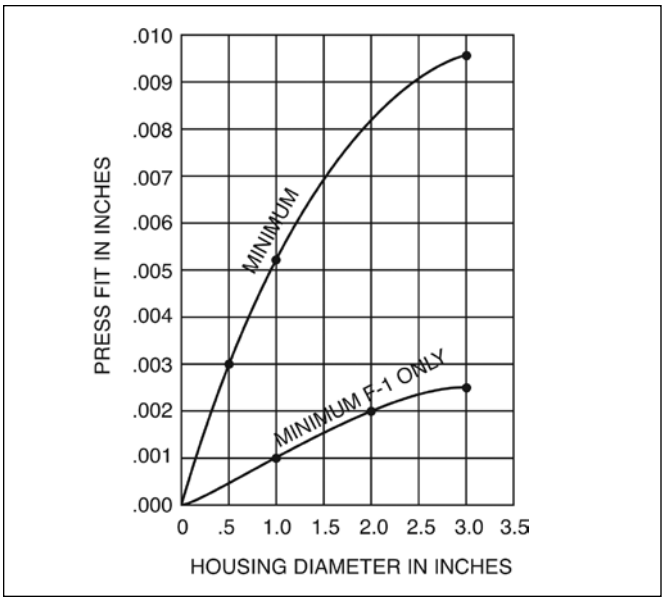

BOST-BRONZ

When a BOST-BRONZ bearing is pressed into a housing, the inside diameter (I.D.) will close-in (becoming smaller). The amount will depend upon the same factors influencing the Press Fit, but will average approximately 75% of the Press Fit allowance.

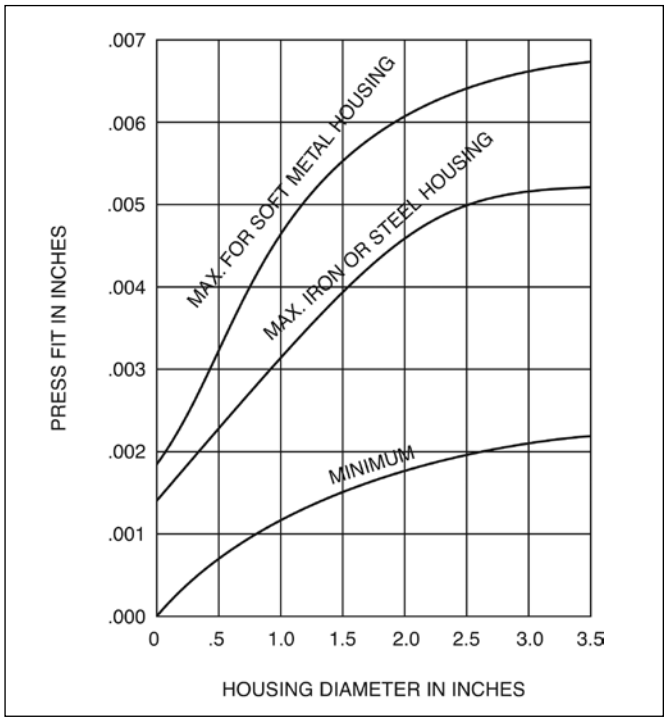

Machining

In cases where it is desired to alter a standard stock bearing or to manufacture parts from a bronze bar or plate stock, the following machining practices are suggested.

BOST-BRONZ

BOST-BRONZ may be readily machined. For best results, use carbide tools. For finishing cuts on bearing surfaces, the cutting tool should be extremely sharp. Use feeds and speeds that are normal for machining regular bronze. Finish with a light cut (up to .005"). This method avoids the pulling or spreading of metal over the surface pores. Cutting oils or coolants should not be used. After machining, parts should be reoiled, using a good grade of oxidation-resistant mineral oil of about SAE20 (ISO 68) viscosity. For re-oiling procedure, see lubrication, Page 178.

BEAR-N-BRONZ

The use of carbide tools or high speed tools is recommended for machining Bear-N-Bronz. Carbide tools should be used at speeds of 500 to 1000 surface feet per minute. High speed steel tools should be used to 200 to 500 surface feet per minute. Either tool should be held to a minimum clearance angle for best results. Cutting solutions are not required.

Assembly and Sizing – BOST-BRONZ

In most instances, sizing the bore of BOST-BRONZ bearing is not necessary. The desired inside diameter will be obtained by proper press fit (and close-in) at assembly. In applications where sizing is necessary, it may be accomplished during assembly by the use of a shouldered sizing arbor, as illustrated in Figure 1. The arbor should be ground and lapped to a size slightly larger (.0002" to .0003" approx.) than the hole desired. A multiple step burnishing tool (see Figure 2) may also be used to size the hole in BOST-BRONZ bearings after assembly.

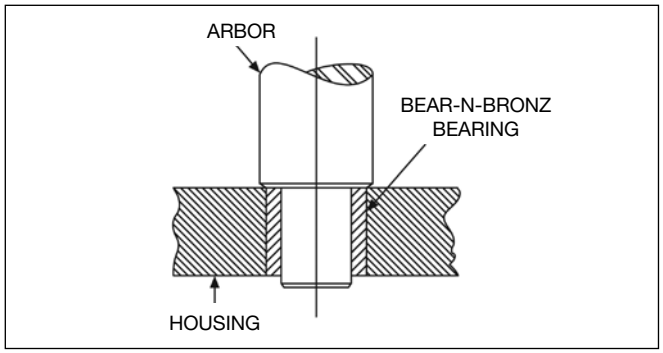

FIGURE 1.

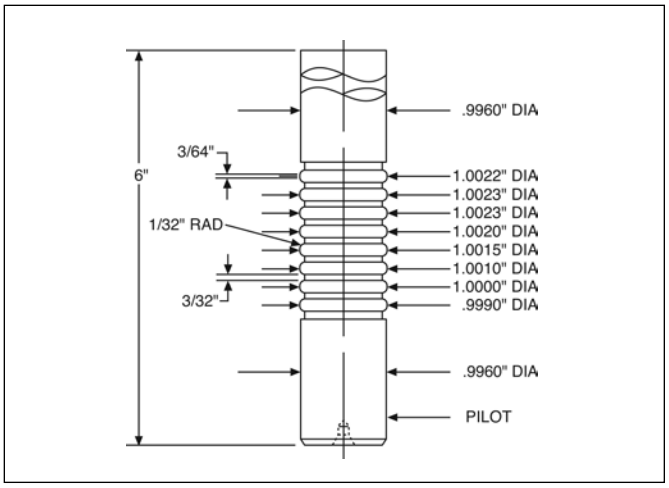

FIGURE 2.

Assembly – BEAR-N-BRONZ

BEAR-N-BRONZ can be easily assembled by using a shouldered arbor, as illustrated, to maintain proper bearing alignment. A steady, even pressure should be applied. The arbor diameter should be of a size to allow for close-in of bearing I.D. at assembly. The surface of the arbor should be lightly oiled to facilitate withdrawal after assembly.

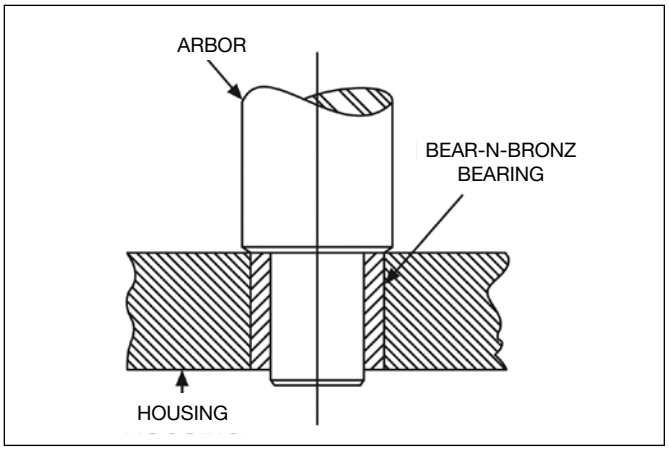



Boston Gear's line of unmounted, inch size ball bearings, rod ends, spherical and linear bearings, give the designer freedom to choose from a wide range of quality bearing products that will resolve numerous application problems.

Boston Gear's inch size ball bearings are offered in Precision Ground, Semi- and Unground Radial and Thrust bearings. Our rod end and linear bearings are offered in Precision and Commercial Series.

Ball Bearings

Boston Ball Bearings provide improved performance over a wide range of operating conditions.

Major features include: Honed raceways on precision ball bearings for maximum life and smoother, quieter operation. Superior, low friction (low torque) seals, to more effectively exclude foreign matter and retain lubricant over a longer period.

The line of Ball Bearings include close tolerance precision units and inexpensive steel assemblies of the semi-ground type. These anti-friction items, available quickly from stock, make it easier to use a superior bearing "exactly right" for the majority of applications.



Anti-Friction Bearings

Ball Bearings (Continued)



The bearings listed in this catalog are made from steel of various analyses. Carburizing grades are case hardened to the desired depths and hardness values, insuring high resistance to wear and breakdown. High carbon chrome alloy steels are through hardened. If you have a special material application, Boston Gear engineers will welcome the opportunity to help you make a proper bearing selection.

Bearings in this catalog may be selected according to finish or accuracy: ground bearings are available in the radial and thrust designs primarily. With boundary dimensions and internal fit-up held to exacting tolerances and with ground and polished ball grooves, ground bearings are recommended for applications requiring greater speeds and loads and where quiet accurate operation is essential. Normal tolerance level is .005”/.0010”.

Unground bearings are designed for applications where speeds and loads are moderate and the requirements of running accuracy and noise level do not warrant the more expensive ground precision bearing. The three basic design types are available. Normal tolerance level is .005”/.010”.

Rod End and Spherical Bearings



Boston Gear’s broad line of rod end and spherical bearings serve many markets, which include textile, agriculture and off-highway vehicles along with military.

Nice® 1600 Series® Bearings

Radial Ball Bearings; Ground, Single Row

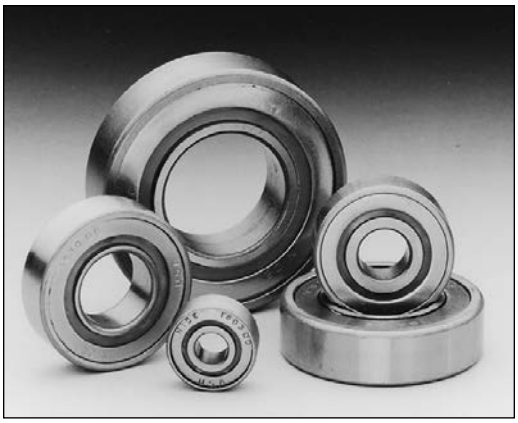

HIGH QUALITY INCH DIMENSIONAL BEARINGS for adaptation to many precision bearing applications. Suitable for speeds in the neighborhood of 5000 R.P.M.

IMPROVED BALL GROOVE FINISH for smoother, quieter operation.

GROUND BORES held to a tolerance of + .0000" to –.0005" on all sizes, 1/4" bore and over.

NYLON BALL RETAINERS (TN) furnished as standard. Steel retainers (J) available on special production order.

GREASE PACKED as standard on Types DC and DS. Types SC, SS and NS can be grease packed on special order.

NYLON SEALS more effectively retain lubricant and exclude foreign matter.

SPECIAL FEATURES including dimensions, tolerances, etc. available on special order.

ORDER BY CATALOG NUMBER OR ITEM CODE

Bore	Double Shield		Double Sealed	
	Catalog Number	Item Code	Catalog Number	Item Code
.2500	1602DS	50724	1602DC	50701
.3125	1603DS	50725	1603DC	50702
.3750	1604DS	50726	1604DC	50703
.3125	1605DS	50727	1605DC	50704
.3750	1606DS	50728	1606DC	50705
.4375	1607DS	50729	1607DC	50706
.3750	1614DS	50730	1614DC	50707
.4375	1615DS	50731	1615DC	50708
.5000	1616DS	50732	1616DC	50709
.4375	1620DS	50733	—	—
.5000	1621DS	50734	1621DC	50710
.6250	1623DS	50736	1623DC	50712
.6250	1628DS	50737	1628DC	50713
.7500	1630DS	50738	1630DC	50714
.6250	1633DS	50739	1633DC	50715
.7500	1635DS	50740	1635DC	50716
.7500	1638DS	50741	1638DC	50717
.8750	1640DS	50742	1640DC	50718
1.0000	1641DS	50743	1641DC	50719
1.1250	1652DS	50744	1652DC	50720
1.2500	1654DS	50745	1654DC	50721
1.2500	1657DS	50746	1657DC	50722

NOTE: Dimensions and load data on next page.

Seal and Shield Arrangements

TYPES SC, SS and NS are available via special order only

DOUBLE SEALED	DOUBLE SHIELD	SINGLE SEAL	SINGLE SHIELD	NO SHIELDS
DC	DS	SC	SS	NS

*All bearings listed are registered Trademarks of RBC Bearings and Roller Bearing Company of America, Inc.

Anti-Friction Bearings

Nice® 1600 Series® Bearings

Radial Ball Bearings; Ground, Single Row

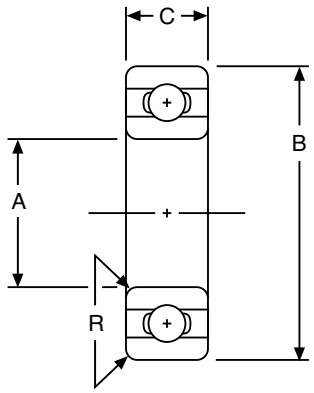

STANDARD TOLERANCES

DIMENSIONS		TOLERANCE
A	2500–1.2500	+.0000 to – .0005
B	.6875–1.7500 2.0000–2.5625	+.0000 to – .0005 +.0000 to – .0006
C	All	+.000 to – .005

For recommended shaft and housing fits, see engineering section, page 238.

ALL DIMENSIONS IN INCHES

Basic Bearing No.	A	B	C	R	Balls	
				Radius	No.	Dia.
1602	.2500	.6875	1/4+	.012	6	1/8
1603 1604	.3125 .3750	.8750	9/32++	.012 .015	7	5/32
1605 1606 1607	.3125 .3750 .4375	.9063	5/16	.012 .015 .015	9	1/8
1614 1615 1616	.3750 .4375 .5000	1.1250	3/8	.025	7	3/16
1620 1621® 1623	.4375 .5000 .6250	1.3750	7/16	.025	8	15/64
1628 1630®	.6250 .7500	1.6250	1/2	.025	8	1/4
1633 1635®	.6250 .7500	1.7500	1/2	.025	8	1/4
1638 1640 1641®	.7500 .8750 1.0000	2.0000	9/16	.035	10	1/4
1652 1654	1.1250 1.2500	2.5000	5/8	.035	10	5/16
1657	1.2500	2.5625	11/16	.035	9	3/8

*Maximum fillet on shaft or in housing which bearing corner will clear.
+ Width SC & DC = 5/16”
++ Width SC & DC = 11/32”

Load Data

The indicated load ratings are based on 2500 hours average life. (L_{50}) to determine the load ratings at 3500 and 5000 hours, 90 percent and 80 percent respectively, of the above ratings should be used.

Basic Bearing Number	Radial Capacity (Lbs.) Revolutions Per Minute								Limiting Thrust (Lbs.)
	50	100	300	500	1200	1800	2500	5000	
1602	230	185	130	110	80	70	65	50	42
1603 1604	380	300	210	175	130	115	105	80	75
1605 1606 1607	305	245	170	140	105	95	85	65	65
1614 1615 1616	530	420	290	245	185	160	145	115	110
1620 1621® 1623	860	690	475	400	300	260	235	185	200
1628 1630® 1633 1635®	980	780	540	460	340	300	265	210	225
1638 1640 1641®	1140	905	630	530	395	345	310	245	280
1652 1654	1695	1345	935	790	590	515	460	365	440
1657	2200	1750	1215	1025	765	665	600	475	570

*All bearings listed are registered Trademarks of RBC Bearings and Roller Bearing Company of America, Inc.

Nice® 7500 Series® Bearings

Radial Ball Bearings; Ground, Single Row

NYLON BALL RETAINERS (TN) standard on all sizes.

SINGLE LIP CONTACT SEALS effectively retain lubricant and exclude foreign material.

GREASE PACKED as standard on all "Double Sealed" Type DL and DLG.

SPECIAL FEATURES including dimensions, tolerances, single or without seals, steel retainers available on special order if quantity warrants.

SNAP RINGS included on all Type DLG sizes. Type DL sizes include snap ring groove but no snap rings furnished.



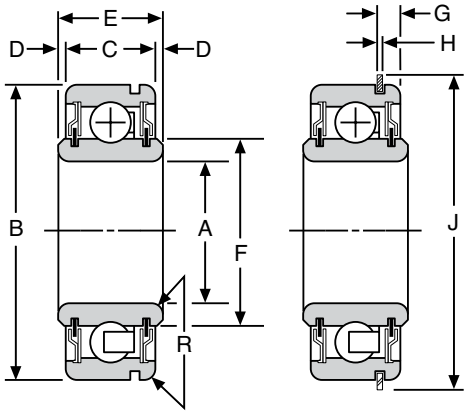

7500 DL
DOUBLE SEAL

7500 DLG
DOUBLE SEAL
WITH SNAP RING

STANDARD TOLERANCES

DIMENSIONS		TOLERANCE
A	All	+.0000 to –.0005
B	1.7500 2.0000-2.5625	+.0000 to –.0005 +.0000 to –.0006
C	All	+.000 to –.005
E	All	+.000 to –.005
G	All	±.005

ALL DIMENSIONS IN INCHES
ORDER BY CATALOG NUMBER OR ITEM CODE

A	B	C	D	E	F	G	H	J	R Radius *	Balls		DL Series		DLG Series	
										No.	Dia.	Catalog Number	Item Code	Catalog Number	Item Code
.5000	1.7500	5/8	1/16	3/4	.993	.136	.042	1-59/64	.035	8	1/4	7508DL	50587	7508DLG	50581
.6250												7510DL	50588	7510DLG	50582
.7500												7512DL	50589	7512DLG	50583
1.0000	2.0000	5/8	1/16	3/4	1.290	.136	.042	2-5/32	.035	10	1/4	7516DL	50591	7516DLG	50585
1.2500	2.5625	3/4	1/16	7/8	1.631	.190	.065	2-49/64	.035	9	3/8	7520DL	50592	7520DLG	50586

*Maximum fillet on shaft or housing which bearing will clear.

For recommended shaft and housing fits, see engineering section, page 238.

Basic Bearing Number	Radial Capacity (Lbs.) Revolutions Per Minute										Max. Thrust Lbs.
	50	100	300	500	1000	1200	1800	2500	3600	5000	
7508-7512	1180	940	650	550	435	410	360	320	285	255	340
7516	1365	1085	750	635	505	475	415	370	330	295	375
7520	2640	2100	1460	1230	975	915	805	715	635	570	740

Load Data

The indicated load ratings are based on 2500 hours average life (L_{50}). To determine the load ratings at 3500 and 5000 hours, 90 percent and 80 percent respectively, of the above ratings should be used.

*All bearings listed are registered Trademarks of RBC Bearings and Roller Bearing Company of America, Inc.

Anti-Friction Bearings

Nice® 7600 Series® Bearings

Radial Ball Bearings; Ground, Single Row; Extended Inner Race



NYLON BALL RETAINERS (TN) standard on all sizes.

SINGLE LIP CONTACT SEALS effectively retain lubricant and exclude foreign material.

GREASE PACKED as standard on all "Double Sealed" Type DL and DLG.

SPECIAL FEATURES including dimensions, tolerances, single or without seals, steel retainers available on special order if quantity warrants.

SNAP RINGS included on all Type DLG sizes. Type DL sizes include snap ring groove but no snap rings furnished.

STANDARD TOLERANCES

DIMENSIONS		TOLERANCE
A	All	+.0008 to –.0000
B	1.7500 2.0000-2.5625	+.0000 to –.0005 +.0000 to –.0006
C	All	+.000 to –.005
E	All	+.000 to –.005
G	All	±.005
K	All	+.000 to –.005

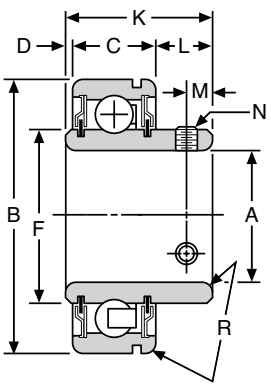

7600 DL
DOUBLE SEAL

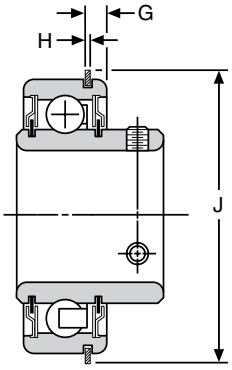

7600 DLG
DOUBLE SEAL
WITH SNAP RING

ALL DIMENSIONS IN INCHES
ORDER BY CATALOG NUMBER OR ITEM CODE

A	B	C	D	F	G	H	J	K	L	M	N	R* Radius *	Balls No.	Balls Dia.	DL Series Catalog Number	DL Series Item Code	DLG Series Catalog Number	DLG Series Item Code
.6250 .7500	1.7500	5/8	1/16	.993	.136	.042	1-59/64	1.092	.405	.233	10-32	.035	8	1/4	7610DL 7612DL	50600 50601	7610DLG 7612DLG	50594 50595
1.0000	2.0000	5/8	1/16	1.290	.136	.042	2-5/32	1.179	.492	.261	10-32	.035	10	1/4	7616DL	50603	7616DLG	50597
1.2500	2.5625	3/4	1/16	1.631	.190	.065	2-49/64	1.417	.605	.261	1/4-28	.035	9	3/8	7620DL	50604	7620DLG	50598

*Maximum fillet on shaft or housing which bearing will clear.

For recommended shaft and housing fits, see engineering section, page 238.

Load Data

The indicated load ratings are based on 2500 hours average life (L_{50}). To determine the load ratings at 3500 and 5000 hours, 90 percent and 80 percent respectively, of the above ratings should be used.

Basic Bearing Number	Radial Capacity (Lbs.) Revolutions Per Minute 50	100	300	500	1000	1200	1800	2500	3600	5000	Max. Thrust (Lbs.)
7610-7612	1180	940	650	550	435	410	360	320	285	255	340
7616	1365	1085	750	635	505	475	415	370	330	295	375
7620	2640	2100	1460	1230	975	915	805	715	635	570	740

*All bearings listed are registered Trademarks of RBC Bearings and Roller Bearing Company of America, Inc.

Nice® 6900 Series® Bearings

Radial Ball Bearings; Ground, Single Row; Flange Mounted

AVAILABLE AS COMPLETE ASSEMBLY, BEARING only or **HOUSING** only.

INNER RACE includes 2 setscrews.

GREASE PACKED, COMPOSITION SEALED.

NYLON RETAINERS (**TN**) furnished as standard.



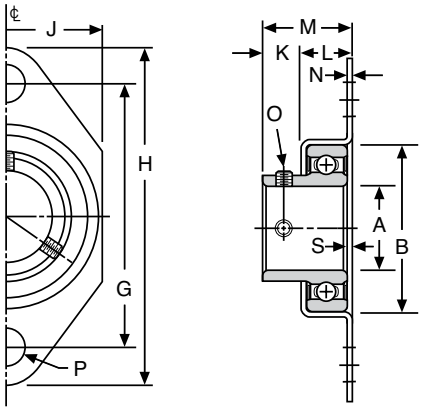

ASSEMBLY

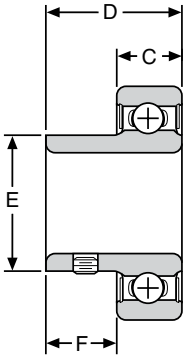

BEARING ONLY

STANDARD TOLERANCES

DIMENSIONS		TOLERANCE
A	All	+.005 to –.000
B	.9062-1.6250 2.000	+.0000 to –.0005 +.0000 to –.0006
C	All	+.000 to –.005

ALL DIMENSIONS IN INCHES
ORDER BY CATALOG NUMBER OR ITEM CODE

A	B	C	D	E	F	G Bolt Ctrs.	H	J +	K	L	M	N	O	P	S	Assembly*		Bearing Only	
																Catalog Number	Item Code	Catalog Number	Item Code
.3750	.9062	5/16	11/16	.555	3/8	1-7/8	2-1/2	1-1/8	11/32	11/32	11/16	.035	8-32	5/16	.000	6906	50572	6906B	50571
.5000 .6250	1.6250	1/2	1	.995	1/2	2-7/8	3-3/4	1-7/8	7/16	11/16	1	.062	1/4-28	7/16	.010	6908 6910	50574 50576	6908B 6910B	50573 50575
.7500 1.0000	2.0000	9/16	1-1/16	1.293	1/2	3-1/4	4-1/8	2-1/4	7/16	11/16	1-1/8	.062	1/4-28 10-32	7/16	1/16	6912 6916	50578 50580	6912B 6916B	50577 50579

*Housings do not have Catalog Numbers. To order specify bearing size-housing. Example: 6906-Housing.
+ J dimension is the overall width.

Basic Bearing Number	Radial Capacity (Lbs.) Revolutions Per Minute			
	50	100	500	1800
6906	305	245	140	95
6908-6910	735	585	340	225
6912	850	675	395	260
6916	1140	905	530	345

Load Data

The indicated load ratings are based on 2500 hours average life (L_{50}). To determine the load ratings at 3500 and 5000 hours, 90 percent and 80 percent respectively, of the above ratings should be used.

*All bearings listed are registered Trademarks of RBC Bearings and Roller Bearing Company of America, Inc.

Anti-Friction Bearings

Nice® 3000 Series® Bearings

Radial Ball Bearings; Semi-Ground, Single Row



LOW COST INCH DIMENSIONAL BEARINGS similar to 1600 Series in construction and dimensions and suitable for speeds up to 2500 R.P.M.

NYLON BALL RETAINERS (TN) furnished as standard. Steel retainers (J) available on special production order.

GREASE PACKED as standard on Types DC and DS. Types SC, SS and NS can be grease packed on special order.

NYLON SEALS more effectively retain lubricant and exclude foreign matter.

SPECIAL FEATURES including dimensions, tolerances, etc. available on special order.

ORDER BY CATALOG NUMBER OR ITEM CODE

Bore	Double Shield		Double Sealed	
	Catalog Number	Item Code	Catalog Number	Item Code
1/4	3002DS	50768	3002DC	50749
3/8	3004DS	50770	—	—
3/8	3014DS	50774	3014DC	50755
1/2	3016DS	50776	3016DC	50757
1/2	3021DS	50778	3021DC	50758
5/8	3023DS	50779	3023DC	50759
5/8	3028DS	50780	3028DC	50760
3/4	3030DS	50781	3030DC	50761
3/4	3035DS	50783	3035DC	50763
1	3041DS	50786	3041DC	50766

Seal and Shield Arrangements

DOUBLE SEALED	DOUBLE SHIELD	SINGLE SEAL	SINGLE SHIELD	NO SHIELDS
DC	DS	SC	SS	NS

TYPES SC, SS and NS are available via special order only.

*All bearings listed are registered Trademarks of RBC Bearings and Roller Bearing Company of America, Inc.

Nice® 3000 Series® Bearings

Radial Ball Bearings; Semi-Ground, Single Row

ALL DIMENSIONS IN INCHES

Basic Bearing Number	A	B	C	R * Radius	Balls	
					No.	Dia.
3002	1/4	11/16	1/4+	.012	6	1/8
3004	3/8	7/8	9/32++	.012	7	5/32
3014 3016	3/8 1/2	1-1/8	3/8	.025	7	3/16
3021 3023	1/2 5/8	1-3/8	7/16	.025	8	15/64
3028 3030	5/8 3/4	1-5/8	1/2	.025	8	1/4
3035	3/4	1-3/4	1/2	.025	8	1/4
3040 3041	7/8 1	2	9/16	.035	10	1/4

*Maximum fillet on shaft or in housing which bearing corner will clear.
+ Width SC & DC = 5/16”
++ Width SC = 11/32”

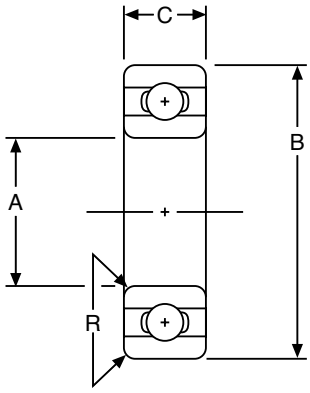

STANDARD TOLERANCES

DIMENSIONS		TOLERANCE
A	All	+.005 to –.000
B	11/16-1-3/4 2	+.0000 to –.0005 +.0000 to –.0006
C	All	±.005

For recommended shaft and housing fits, see engineering section, page 244.

Basic Bearing Number	Radial Capacity (Lbs.) Revolutions Per Minute					Limiting Thrust (Lbs.)
	50	100	500	1800	2500	
3002	150	120	70	45	40	30
3004	250	200	120	80	70	50
3014 3016	350	280	165	105	95	75
3021 3023	575	460	270	175	155	135
3028 3030 3035	650	520	305	200	180	150
3040 3041	760	605	355	230	205	185

Load Data

Load ratings are provided only as a guide for bearing selection and are not to be used for life calculation.

*All bearings listed are registered Trademarks of RBC Bearings and Roller Bearing Company of America, Inc.

Anti-Friction Bearings

Flanged 400F Series

Radial Ball Bearings; Unground, Single Row



FULL BALL TYPE (V) without retainer.

SUITABLE for SPEEDS up to 1200 RPM.

SOFT STEEL BAND on O.D. permits bearing to be pressed in a housing without the necessity of close housing tolerances.

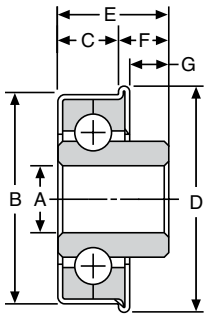

STANDARD TOLERANCES

DIMENSIONS		TOLERANCE
A	All	+.005 to –.000
B	All	+.005 to –.000
C	All	±.010

ALL DIMENSIONS IN INCHES
ORDER BY CATALOG NUMBER OR ITEM CODE

A	B	C	D	E	F	G	Balls		Catalog Number	Item Code
							Number	Dia.		
1/4	11/16	13/65	3/4	1/4	3/64	0	10	1/8	5561	50566
3/8	29/32	17/64	1	.350	.088	.048	15	1/8	5543	50565
1/2	1-1/8	.305	1-1/4	7/16	.132	1/16	18	1/8	5491	50564
1/2	1-3/8	11/32	1-1/2	.475	1/8	1/32	15	3/16	5881	50569
5/8	1-3/8	11/32	1-1/2	.475	1/8	1/32	15	3/16	5273	50559
1/2	1-1/2	3/8	1-21/32	11/16	.320	1/4	11	1/4	5327	50561
3/4	1-3/4	.462	1-15/16	37/64	1/8	1/64	14	1/4	5891	50570
3/4	2	13/32	2-1/8	9/16	5/32	1/16	17	1/4	5875	50568
1	2	13/32	2-1/8	5/8	7/32	1/8	17	1/4	5418	50563

Load Data

Load ratings are provided only as a guide for bearing selection and are not to be used for life calculation.

Basic Bearing Number	Radial Capacity (Lbs.) Revolutions Per Minute			
	50	200	600	1200
5561	110	53	30	21
5543	167	80	45	32
5368-5491	200	96	54	38
5881-5273	375	180	101	71
5327	492	236	132	92
5891	625	300	168	177
5875-5418	757	362	204	142

Typical Application
Flanged Series

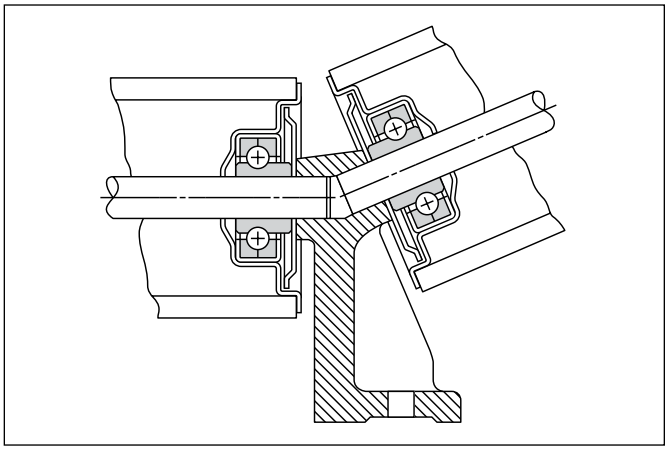

AO/SAO Series

Thrust Ball Bearings; Ground, Unbanded

Hardened Alloy Steel — AO Series
Hardened Stainless Steel — SAO Series
FOR LIGHT LOADS

HIGH QUALITY HARDENED STEEL BALLS, retained in a nylon cage.

HARDENED THRUST WASHERS, are ground both sides to provide smooth, flat, parallel ball raceway surfaces.

QUALITY and NUMBER OF BALLS assure high load carrying capacity.

NYLON RETAINER assures minimum frictional losses.

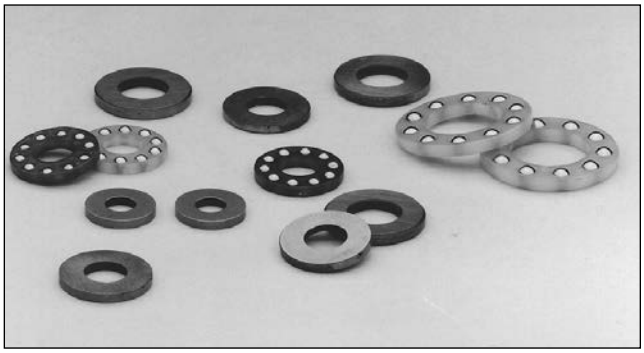

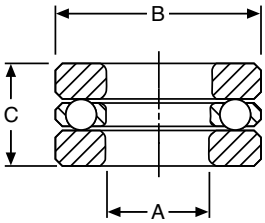

STANDARD TOLERANCES

DIMENSIONS		TOLERANCE
A*	All	+.002 to +.007
B	All	+.000 to –.005
C	All	+.000 to –.010

*AO/SAO 16 +.002 to +.010

ALL DIMENSIONS IN INCHES
ORDER BY ITEM CODE (2 WASHERS AND 1 NYLON CAGE)

A	B	C	Balls		Basic Bearing	AO Series Alloy		SAO Series Stainless Steel	
			Number	Diameter	Number	Washer	Nylon Cage	Washer	Nylon Cage
3/16	7/16	3/16	9	1/16	AO/SAO1	06724	56807	06760	56813
1/4	9/16	7/32	10	3/32	AO/SAO5	06726	56808	06762	56814
5/16	5/8	1/4	10	3/32	AO/SAO8	06728	56809	06764	56815
3/8	11/16	9/32	12	3/32	AO/SAO10	06730	56810	06766	56816
1/2	7/8	3/8	10	1/8	AO/SAO16	06734	56812	06770	56818

Load Data

The indicated load ratings are based on 2500 hours average life (L_{50}). To determine the load ratings at 3500 and 5000 hours, 90 percent and 80 percent respectively, of the above ratings should be used.

Basic Bearing Number	Thrust Capacity (Lbs.) Revolutions Per Minute			
	50	100	500	1000
AO/SAO1	30	25	14	11
AO/SAO5	64	56	31	25
AO/SAO8	68	60	34	27
AO/SAO10	85	72	42	32
AO/SAO16	250	125	70	58

Anti-Friction Bearings

Nice® 600 Series® Bearings

Thrust Ball Bearings; Unground, Banded



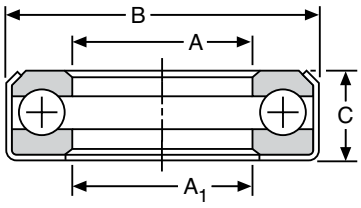

FULL BALL TYPE (V) without retainer.

ALL DIMENSIONS IN INCHES
ORDER BY CATALOG NUMBER OR ITEM CODE

A	A_1	B	C	Balls		Catalog Number	Item Code
				No.	Dia.		
.250	.275	27/32	.333	10	5/32	601	50537
.375	.400	1-3/64	.359	14	5/32	602	50538
.453	.478	55/64	.281	15	1/8	602-3/4	50540
.500	.525	1-17/64	.437	10	1/4	603	50541
.500	.525	1	.344	12	3/16	603-1/4	50542
.625	.656	1-1/8	.344	16	5/32	605	50543
.625	.656	1-27/64	.456	12	1/4	606	50544
.750	.775	1-21/32	.545	15	1/4	607	50545
.875	.900	1-57/64	.594	17	1/4	608	50547
1.000	1.075	2	.640	12	3/8	609	50548
1.000	1.031	1-31/32	.625	18	1/4	610	50549
1.016	1.031	1-3/4	.625	16	1/4	610-1/4	50550
1.063	1.094	1-31/32	.625	18	1/4	611	50551
1.125	1.150	2-3/32	.625	19	1/4	613	50552
1.457	1.462	2-15/32	.625	23	1/4	619	50555
1.500	1.525	2-19/32	.625	25	1/4	621	50556

STANDARD TOLERANCES

DIMENSIONS		TOLERANCE
A	All	–.000 to +.010
A_1	All	±.010
B	All	±.010
C	All	±.010

Load Data

Load ratings are provided only as a guide for bearing selection and are not to be used for life calculation.

Bearing Number	Thrust Capacity (Lbs.) Revolutions Per Minute						Crane Hook
	10	50	100	250	500	1000	
601	304	246	182	98	71	51	912
602	426	344	254	138	100	71	1277
602-3/4	292	236	174	94	68	48	873
603	780	630	465	252	182	129	2325
603-1/4	526	425	314	170	123	87	1570
605	487	394	291	158	114	81	1460
606	936	750	558	302	218	155	2790
607	1170	945	698	378	273	194	3490
608	1326	1071	791	428	309	220	3960
609	1706	1378	1017	551	398	284	5080
610	1404	1134	837	454	328	233	4190
610-1/4	1248	1008	744	403	291	207	3730
611	1404	1134	837	454	328	233	4190
613	1482	1197	883	479	346	246	4420
619	1794	1449	1069	579	419	298	5350
621	1950	1575	1162	630	455	324	5820

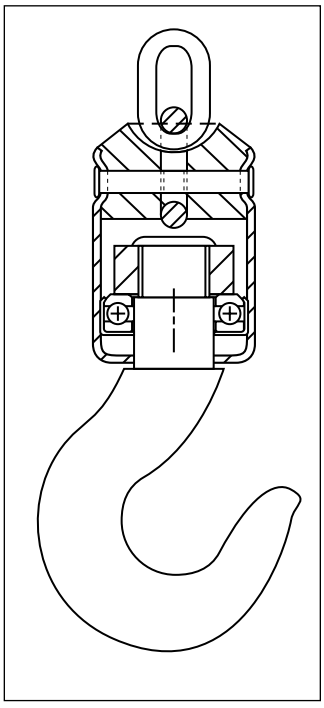

Crane Hook Swivel Application Bearing No. 605

This standard product provided the exact bearing needed by this crane hoist manufacturer. An unground bearing provided the economy, while a full ball complement provided the required high thrust-load capacity. The bearing features a bonded non-separable assembly that provides easy installation and lubrication.

Special platings and stainless steel balls are readily available as a cost-effective way to fight corrosion and increase service life.

*All bearings listed are registered Trademarks of RBC Bearings and Roller Bearing Company of America, Inc.

2000 Series

Ball Bearings Sheaves; Unground

NR 2000 Series are unground, of pressed steel construction with hardened raceways. For rope, wire rope, etc. and special uses requiring a semi-circular tread.



ALL DIMENSIONS IN INCHES
ORDER BY CATALOG NUMBER OR ITEM CODE

.166	1-1/4 1-21/32	9/32 5/16	7/16 7/16	3/8 3/8	1 1-11/32	7/32 7/32	NR2000 NR2006	67135 67136
1/4	2-7/8 3-1/16	17/32 37/64	1/2 1/2	1 1	2-9/16 2-9/16	13/32 13/32	NR2008 NR2010	67137 67138
5/16	3	19/32	3/4	1	2-5/8	1/2	NR2011	67139
3/8	2-3/4 2-3/4 2-3/4 2-7/8 3 3-1/16 3-5/16 4-1/16	1/2 1/2 9/16 17/32 1/2 37/64 3/4 17/32	7/16 9/16 7/16 1/2 11/16 1/2 13/16 3/4	1 1 1 1 1 1 13/16 1	2-3/8 2-3/8 2-3/8 2-9/16 2-3/8 2-9/16 2-3/8 3-9/16	3/8 3/8 7/16 13/32 3/8 13/32 7/16 13/32	NR2012 NR2012-1 NR2013 NR2014 NR2015 NR2016 NR2017 NR2024	67140 67141 67142 67143 67144 67145 67146 67149
1/2	2-7/8 4-1/16	11/16 17/32	13/16 3/4	13/16 1	2-1/4 3-9/16	17/32 13/32	NR5378 NR2025	67267 67150
5/8	2-3/4 3	7/16 19/32	9/16 3/4	13/16 1	2-3/16 2-5/8	5/16 1/2	NR2018 NR2020*	67147 67148
1	7-1/8	13/16	5/8	1-3/8	6	17/32	NR5623	67275

* Inner race "D" dimension not centered.

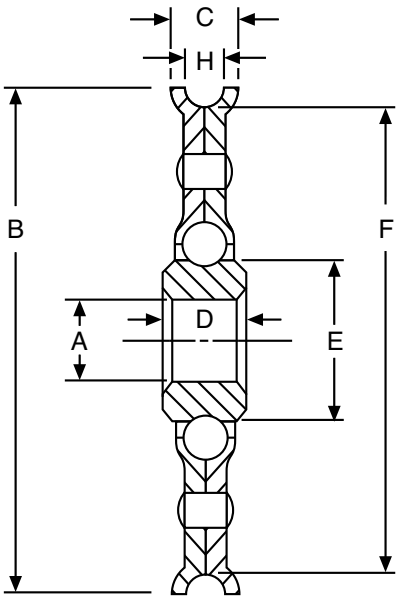

NR2000 NR2006	88	62	42	34	24	19	10	1/8
NR2008 NR2010	300	210	144	116	81	66	14	1/4
NR2011	293	208	146	121	82	70	14	1/4
NR2012 NR2012-1	300	210	144	116	81	66	14	1/4
NR2013	230	164	115	95	65	55	14	1/4
NR2014 NR2015 NR2016 NR2017	300	210	144	116	81	66	14	1/4
							15	3/16
NR2024 NR5378 NR2025	471	334	235	194	132	112	14	1/4
							15	3/16
							14	1/4
NR2018	300	210	144	116	81	66	15	3/16
NR2020 NR5623	293	208	146	121	82	70	19	1/4

Load Data

Load ratings are provided only as a guide for bearing selection and are not to be used for life calculation.

STANDARD TOLERANCES

DIMENSIONS		TOLERANCE
A	All	+.005 to -.000

F

2100 Series

Ball Bearings Sheaves; Unground



NR 2100 Series are unground, of pressed steel construction with hardened raceways. For chain or belt application.

ALL DIMENSIONS IN INCHES
ORDER BY CATALOG NUMBER OR ITEM CODE

A	B	C	D	E	F	H	J	Catalog No.	Item Code
.372	2-1/4	19/32	7/8	9/16	1-5/8	15/32	15/32	NR2105	67151
	2-5/8	1/2	5/8	13/16	2	3/8	3/8	NR2106	67152
3/8	3-1/4	19/32	11/16	1	2-11/16	15/32	7/16	NR2111-1	67154
	3-3/8	19/32	11/16	1	2-11/16	15/32	7/16	NR2111	67153
	3-3/8	19/32	7/8	1	2-11/16	15/32	7/16	NR2112	67155
1/2	3	5/8	15/16	1	2-13/16	1/2	1/2	NR2113	67156
	4-15/16	3/4	7/8	1	4	5/8	9/16	NR2118	67157
5/8	4-7/16	5/8	3/4	1	3-7/8	27/64	27/64	NR2120	67158

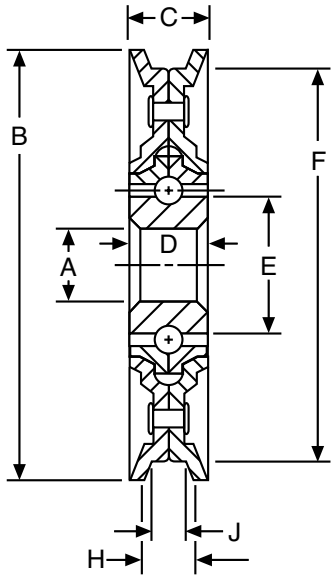

Load Data

Load ratings are provided only as a guide for bearing selection and are not to be used for life calculation.

Sheave Number	Radial Load Capacity in Pounds Revolutions Per Minute						Balls	
	50	100	200	300	600	900	No.	Diam.
NR2105	220	153	119	85	59	48	11	3/16
NR2106	356	247	170	137	96	78	10	1/4
NR2111-1 NR2111 NR2112 NR2113	327	232	163	135	92	78	10	5/16
NR2118	500	344	240	192	134	109	14	1/4
NR2120	293	208	146	121	82	70	14	1/4

STANDARD TOLERANCES

DIMENSIONS		TOLERANCE
A	All	+.005 to -.000

2200 Series
Ball Bearings Wheels; Unground

The NR 2200 series pressed steel, ball bearing type wheels conform to the drawings showing their tread types. NR2201, 2204 and 2205 have ball races and outer housing carefully hardened. NR 2203 and 2206 have hardened races and unhardened outer housings.



ALL DIMENSIONS IN INCHES
ORDER BY CATALOG NUMBER OR ITEM CODE

A	B	C	D	E	R	Catalog No.	Item Code
1/4	1.400	1/2	7/16	9/16	—	NR2201	67159
3/8	2-1/8	1/2	5/8	13/16	—	NR2203	67160
3/8	2-1/2	11/16	11/16	1	—	NR2204	67161
17/32	2-1/2	11/16	11/16	1	—	NR2205	67162
1/2	2-3/4	9/16	11/16	1	3/4	NR2206	67163

STANDARD TOLERANCES

DIMENSIONS		TOLERANCE
A	All	+.005 to -.000

LOAD DATA*

Wheel Number	Radial Load Capacity in Pounds Revolutions Per Minute						Balls	
	50	100	200	300	600	900	No.	Diam.
NR2201	91	66	47	37	25	23	15	1/8
NR2203	230	164	115	95	65	55	15	3/16
NR2204 NR2205	136	100	71	56	38	34	14	1/4
NR2206	327	232	163	135	92	78	14	1/4

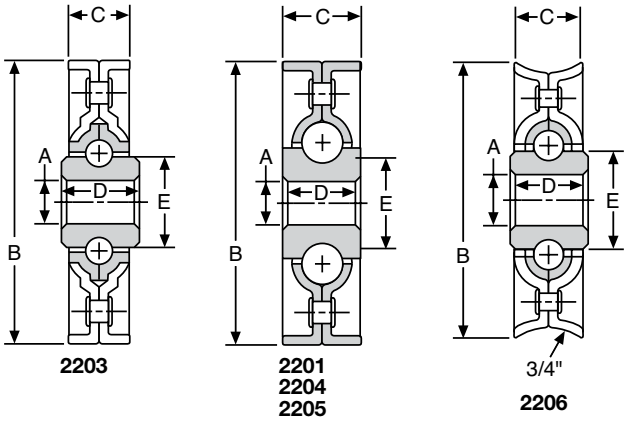

Flanged 2300 Series Unground

The NR 2300 Series pressed steel, ball bearing type wheels are advantageous for application to wooden rollers or steel tubes, pipes, etc. The flange serves as an economical method of locating the roller in its nest. The ball races are carefully hardened while the outer housing is unhardened.

ALL DIMENSIONS IN INCHES
ORDER BY CATALOG NUMBER OR ITEM CODE

3/8	2	1/2	11/16	9/16	1.875	1.875	7/16	NR2308	67165
3/8	2-1/4	9/16	3/4	9/16	1.625	1.625	1/2	NR2312+	67166
1/2	3	9/16	15/16	1	2.781	2.810	1/2	NR2324	67167

+Screw holes in Flange, for application to Wood Rollers.

STANDARD TOLERANCES

DIMENSIONS		TOLERANCE
A	All	+.005 to -.000

LOAD DATA*

Wheel Number	Radial Load Capacity in Pounds Revolutions Per Minute						Balls	
	50	100	200	300	600	900	No.	Diam.
NR2308	77	56	40	32	21	19	15	1/8
NR2312	220	153	119	85	59	48	15	1/8
NR2324	327	232	163	135	92	78	14	1/4

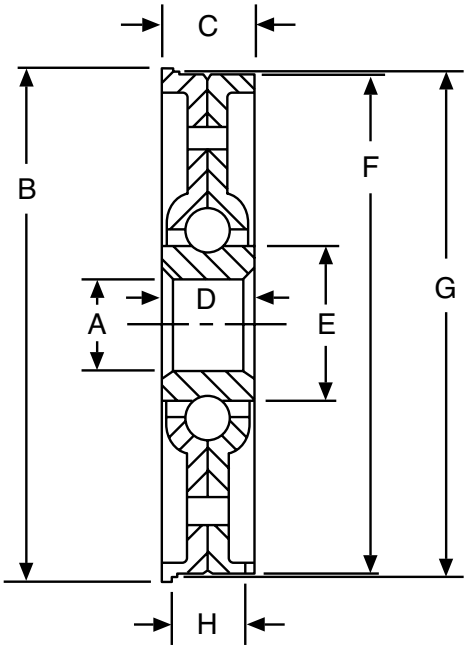

*Load ratings are provided only as a guide for bearing selection and are not to be used for life calculation.

Self-Aligning Bearings

KF Female Series

Rod Ends – Economical

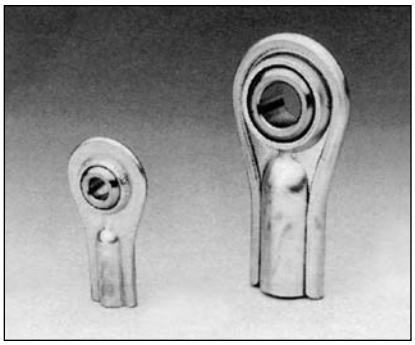

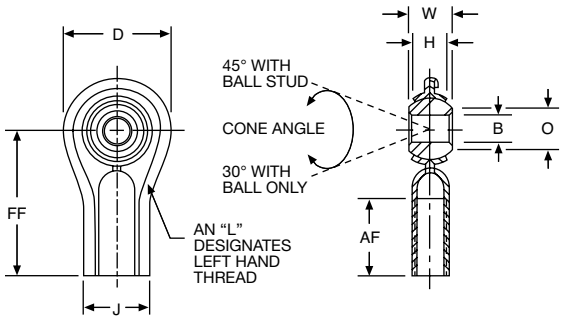

SPECIFICATIONS

Outer Member	Low carbon steel stamping plated for corrosion resistance
Ball	Low carbon steel, case hardened plated for corrosion resistance and wear

ALL DIMENSIONS IN INCHES

Bore B	W	H	AF	FF	D	J	O	Ball Dia.	Thread
+.0025 −.0005	±.005	REF	±.060	±.030	±.030	REF	REF	REF	Class UNF-2
.1900	.312	.250	.500	1.062	.750	.450	.296	.430	10-32
.2500	.375	.287	.687	1.312	.850	.515	.346	.510	1/4-28
.3125	.437	.305	.687	1.375	1.015	.590	.438	.618	5/16-24
.3750	.500	.400	.875	1.625	1.125	.725	.508	.713	3/8-24
.5000	.625	.500	1.125	2.125	1.470	1.010	.690	.931	1/2-20

LOAD DATA

Basic Bearing Number	Ultimate Static Load (Radial) Rating (Lbs.)	Approx. Wt. (Lbs.)
3	1,000	.02
4	1,900	.04
5	2,300	.07
6	3,000	.11
8	6,100	.23

ORDER BY CATALOG NUMBER OR ITEM CODE

Bore	Right Hand		Left Hand	
	Catalog Number	Item Code	Catalog Number	Item Code
.1900	KF-3	65001	KFL-3	65070
.2500	KF-4	65002	KFL-4	65140
.3125	KF-5	65041	KFL-5	65141
.3750	KF-6	65042	KFL-6	65142
.5000	KF-8	65069	KFL-8	65252

NOTES: To order with optional studs, add letters "Y" or "S" to suffix. For stud specifications, see Page 211.
For Engineering Data, see Pages 207-211.

HM-C Male/HF-C Female Series

Rod Ends – Commercial

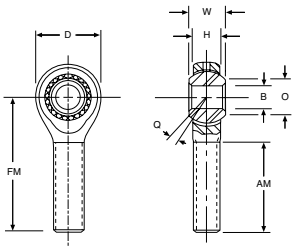

MALE

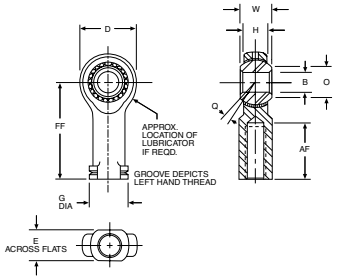

FEMALE

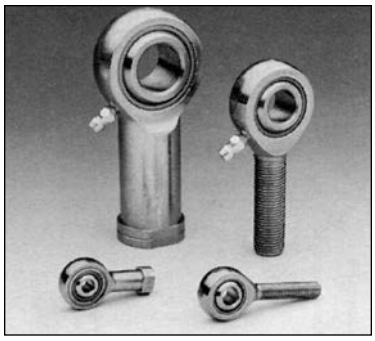

ALL DIMENSIONS IN INCHES

Bore B	W	H	AM	FM	AF	FF	D	G	E	O	Ball Dia.	Q	Thread
+.0025 -.0005	±.005	REF	±.060	±.030	±.060	±.030	±.010	REF	REF	REF	REF	REF	Class UNF-2
.1900	.312	.250	.750	1.250	.562	1.062	.750	.406	.312	.296	.430	±5-1/2°	10-32
.2500	.375	.281	1.000	1.562	.750	1.312	.750[1]	.468	.375	.346	.510	±6-1/2°	1/4-28
.3125	.437	.344	1.250	1.875	.750	1.375	.875	.500	.437	.438	.618	±5-1/2°	5/16-24
.3750	.500	.406	1.250	1.938	.937	1.625	1.000	.687	.562	.508	.713	±5°	3/8-24
.4375	.562	.437	1.375	2.125	1.062	1.812	1.125	.750	.625	.578	.806	±6°	7/16-20
.5000	.625	.500	1.500	2.438	1.187	2.125	1.312	.875	.750	.690	.931	±5°	1/2-20
.6250	.750	.562	1.625	2.625	1.500	2.500	1.500	1.000	.875	.801	1.098	±6°	5/8-18
.7500	.875	.687	1.750	2.875	1.750	2.875	1.750	1.125	1.000	1.010	1.336	±5°	3/4-16

+Tolerance +.015/–.010

ORDER BY CATALOG NUMBER OR ITEM CODE

Bore	Right Hand				Left Hand			
	With Lubricator		Without Lubricator		With Lubricator		Without Lubricator	
	Catalog Number	Item Code	Catalog Number	Item Code	Catalog Number	Item Code	Catalog Number	Item Code
MALE TYPE								
.1900	—	—	HM-3C	48193	—	—	HML-3C	48208
.2500	HM-4CG	48201	HM-4C	48194	HML-4CG	48216	HML-4C	48209
.3125	HM-5CG	48202	HM-5C	48195	HML-5CG	48217	HML-5C	48210
.3750	HM-6CG	48203	HM-6C	48196	HML-6CG	48218	HML-6C	48211
.4375	HM-7CG	48204	HM-7C	48197	HML-7CG	48219	HML-7C	48212
.5000	HM-8CG	48205	HM-8C	48198	HML-8CG	48220	HML-8C	48213
.6250	HM-10CG	48206	HM-10C	48199	HML-10CG	48221	HML-10C	48214
.7500	HM-12CG	48207	HM-12C	48200	HML-12CG	48222	HML-12C	48215
FEMALE TYPE								
.1900	—	—	HF-3C	48163	—	—	HFL-3C	48178
.2500	HF-4CG	48171	HF-4C	48164	HFL-4CG	48186	HFL-4C	48179
.3125	HF-5CG	48172	HF-5C	48165	HFL-5CG	48187	HFL-5C	48180
.3750	HF-6CG	48173	HF-6C	48166	HFL-6CG	48188	HFL-6C	48181
.4375	HF-7CG	48174	HF-7C	48167	HFL-7CG	48189	HFL-7C	48182
.5000	HF-8CG	48175	HF-8C	48168	HFL-8CG	48190	HFL-8C	48183
.6250	HF-10CG	48176	HF-10C	48169	HFL-10CG	48191	HFL-10C	48184
.7500	HF-12CG	48177	HF-12C	48170	HFL-12CG	48192	HFL-12C	48185

NOTES:

To order with optional studs, add letter "Y" or "S" to suffix. For stud specifications, see Page 211.

Lubricators available on sizes 4 through 12 only, studs available on all sizes.

For Engineering Data, see Pages 207-211.

SPECIFICATIONS

Outer Member	Low carbon steel plated for corrosion resistance
Ball	Case hardened steel plated for corrosion resistance and wear
Insert	Oil impregnated sintered bronze

LOAD DATA

Basic Bearing Number	Ultimate Static Load (Radial) Rating (Lbs.)		Approx. Wt. (Lbs.)	
	Male	Female	Male	Female
3	1,600	1,800	.04	.04
4	2,250	2,300	.05	.06
5	2,850	2,900	.08	.09
6	3,900	4,300	.12	.16
7	5,300	5,350	.17	.20
8	7,400	8,400	.27	.32
10	9,350	9,550	.40	.48
12	10,450	10,500	.72	.72

Self-Aligning Bearings

CMHD Male/CFHD Female Series

Rod Ends – Commercial; Self Lubricating

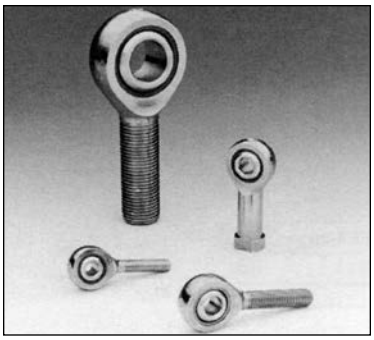

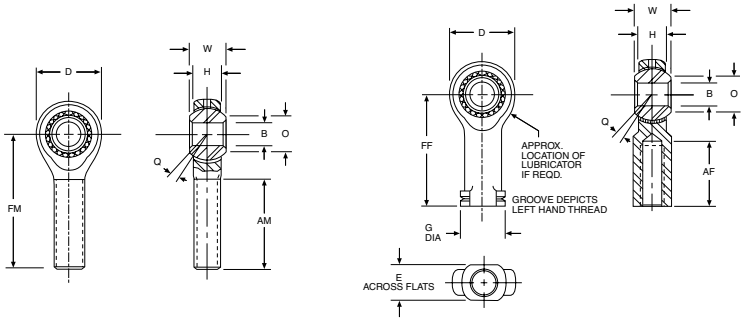

MALE FEMALE

ALL DIMENSIONS IN INCHES

Bore B	W	H	AM	FM	AF	FF	D	G	E	O	Ball Dia.	Thread	Q
+.0025 -.0005	±.005	REF	±.060	±.030	±.060	±.030	±.010	REF	REF	REF	REF	Class UNF-2	REF
.1900	.312	.250	.750	1.250	.562	1.062	.625	.406	.312	.296	.430	10-32	±6°
.2500	.375	.281	1.000	1.562	.750	1.312	.750	.468	.375	.346	.510	1/4-28	±7°
.3125	.437	.344	1.250	1.875	.750	1.375	.875	.500	.437	.438	.618	5/16-24	±6°
.3750	.500	.406	1.250	1.938	.937	1.625	1.000	.687	.562	.508	.713	3/8-24	±5-1/2°
.4375	.562	.437	1.375	2.125	1.062	1.812	1.125	.750	.625	.578	.806	7/16-20	±6°
.5000	.625	.500	1.500	2.438	1.187	2.125	1.312	.875	.750	.690	.931	1/2-20	±5°
.6250	.750	.562	1.625	2.625	1.500	2.500	1.500	1.000	.875	.801	1.098	5/8-18	±7-1/2°
.7500	.875	.687	1.750	2.875	1.750	2.875	1.750	1.125	1.000	1.010	1.336	3/4-16	±6°

SPECIFICATIONS

Outer Member	Low carbon steel plated for corrosion resistance
Ball	Case hardened steel electroless nickel plated
Insert	Reinforced nylon

LOAD DATA

Basic Bearing Number	Ultimate Static Load (Radial) Rating (Lbs.)		Approx. Wt. (Lbs.)
	Male	Female	
3	1,150	1,200	.02
4	1,600	1,650	.04
5	2,700	2,800	.07
6	3,200	3,250	.11
7	3,750	3,800	.15
8	5,800	6,400	.23
10	7,050	7,100	.38
12	8,800	9,000	.58

ORDER BY CATALOG NUMBER OR ITEM CODE

Bore	Right Hand		Left Hand	
	Catalog Number	Item Code	Catalog Number	Item Code
MALE TYPE				
.1900	CMHD-3	48307	CMHDL-3	48315
.2500	CMHD-4	48308	CMHDL-4	48316
.3125	CMHD-5	48309	CMHDL-5	48317
.3750	CMHD-6	48310	CMHDL-6	48318
.4375	CMHD-7	48311	CMHDL-7	48319
.5000	CMHD-8	48312	CMHDL-8	48320
.6250	CMHD-10	48313	CMHDL-10	48321
.7500	CMHD-12	48314	CMHDL-12	48322
FEMALE TYPE				
.1900	CFHD-3	48291	CFHDL-3	48299
.2500	CFHD-4	48292	CFHDL-4	48300
.3125	CFHD-5	48293	CFHDL-5	48301
.3750	CFHD-6	48294	CFHDL-6	48302
.4375	CFHD-7	48295	CFHDL-7	48303
.5000	CFHD-8	48296	CFHDL-8	48304
.6250	CFHD-10	48297	CFHDL-10	48305
.7500	CFHD-12	48298	CFHDL-12	48306

NOTES:

To order with optional studs, add letter “Y” or “S” to suffix. For stud specifications, see Page 211.

For Engineering Data, see Pages 207-211.

HM Males/HF Female Series

Rod Ends – Precision

F

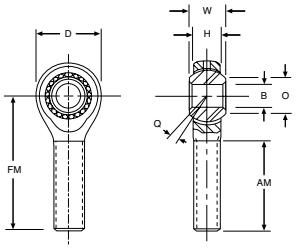

MALE

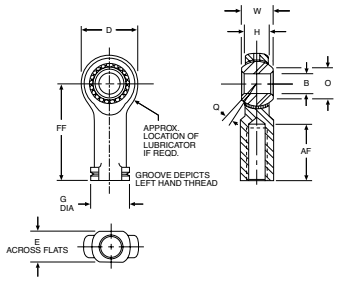

FEMALE



ALL DIMENSIONS IN INCHES

Bore B	W	H	AM	FM	AF	FF	D	G	E	O	Ball Dia.	Q	Thread
+.0015 -.0005	±.005	REF	±.060	±.030	±.060	±.030	±.010	REF	REF	REF	REF	REF	Class UNF-2
.1900	.312	.250	.750	1.250	.562	1.062	.750	.406	.312	.296	.430	±5-1/2°	10-32
.2500	.375	.281	1.000	1.562	.750	1.312	.750(1)	.468	.375	.346	.510	±6-1/2°	1/4-28
.3125	.437	.344	1.250	1.875	.750	1.375	.875	.500	.437	.438	.618	±5-1/2°	5/16-24
.3750	.500	.406	1.250	1.938	.937	1.625	1.000	.687	.562	.508	.713	±5°	3/8-24
.4375	.562	.437	1.375	2.125	1.062	1.812	1.125	.750	.625	.578	.806	±6°	7/16-20
.5000	.625	.500	1.500	2.438	1.187	2.125	1.312	.875	.750	.690	.931	±5°	1/2-20
.6250	.750	.562	1.625	2.625	1.500	2.500	1.500	1.000	.875	.801	1.098	±6°	5/8-18
.7500	.875	.687	1.750	2.875	1.750	2.875	1.750	1.125	1.000	1.010	1.336	±5°	3/4-16
1.0000	1.375	1.000	2.125	4.125	2.125	4.125	2.750(2)	1.625	1.500	1.269	1.875	7°	1-1/4-12(4)

(1) Tolerance +.015/–.010 (2) Tolerance +.030/–.010 (3) Tolerance +.000/–.005 (4) Class 3 Threads

ORDER BY CATALOG NUMBER OR ITEM CODE

Bore	Right Hand				Left Hand			
	With Lubricator		Without Lubricator		With Lubricator		Without Lubricator	
	Catalog Number	Item Code	Catalog Number	Item Code	Catalog Number	Item Code	Catalog Number	Item Code
MALE TYPE								
.1900	—	—	HM-3	48259	—	—	HML-3	48276
.2500	HM-4G	48267	HM-4	48260	HML-4G	48284	HML-4	48277
.3125	HM-5G	48268	HM-5	48261	HML-5G	48285	HML-5	48278
.3750	HM-6G	48269	HM-6	48262	HML-6G	48286	HML-6	48279
.4375	HM-7G	48270	HM-7	48263	HML-7G	48287	HML-7	48280
.5000	HM-8G	48271	HM-8	48264	HML-8G	48288	HML-8	48281
.6250	HM-10G	48272	HM-10	48265	HML-10G	48289	HML-10	48282
.7500	HM-12G	48273	HM-12	48266	HML-12G	48290	HML-12	48283
1.0000	HM-16G	48103	HM-16	48102	HML-16G	48107	HML-16	48106
FEMALE TYPE								
.1900	—	—	HF-3	48225	—	—	HFL-3	48242
.2500	HF-4G	48233	HF-4	48226	HFL-4G	48250	HFL-4	48243
.3125	HF-5G	48234	HF-5	48227	HFL-5G	48251	HFL-5	48244
.3750	HF-6G	48235	HF-6	48228	HFL-6G	48252	HFL-6	48245
.4375	HF-7G	48236	HF-7	48229	HFL-7G	48253	HFL-7	48246
.5000	HF-8G	48237	HF-8	48230	HFL-8G	48254	HFL-8	48247
.6250	HF-10G	48238	HF-10	48231	HFL-10G	48255	HFL-10	48248
.7500	HF-12G	48239	HF-12	48232	HFL-12G	48256	HFL-12	48249
1.0000	HF-16G	48105	HF-16	48104	HFL-16G	48109	HFL-16	48108

NOTES:

To order with optional studs, add letter “Y” or “S” to suffix. For stud specifications, see Page 211.
Lubricators available on sizes 4 through 16 only, studs available on sizes 3 through 12 only.
For Engineering Data, see Pages 207-211.

SPECIFICATIONS

	Sizes 3 - 12	Size 16
Outer Member	Low carbon steel plated for corrosion resistance	
Ball	Case hardened steel for corrosion resistance and wear	52100 steel heat treated plated for corrosion resistance
Insert	Oil impregnated sintered bronze	Low carbon steel plated for corrosion resistance

LOAD DATA

Basic Bearing Number	Ultimate Static Load (Radial) Rating (Lbs.)		Approx. Wt. (Lbs.)	
	Male	Female	Male	Female
3	1,600	1,800	.04	.04
4	2,250	2,300	.05	.06
5	2,850	2,900	.08	.09
6	3,900	4,300	.12	.16
7	5,300	5,350	.17	.20
8	7,400	8,400	.27	.32
10	9,350	9,550	.40	.48
12	10,450	10,500	.62	.72
16	43,540	43,540	2.41	2.13

Self-Aligning Bearings

HME Male/HFE Female Series

Rod Ends – Precision; Self Lubricating

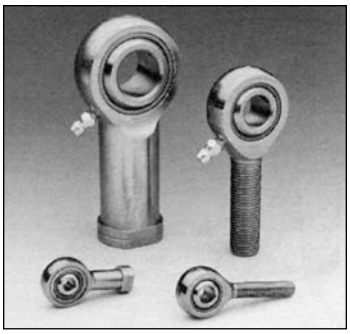

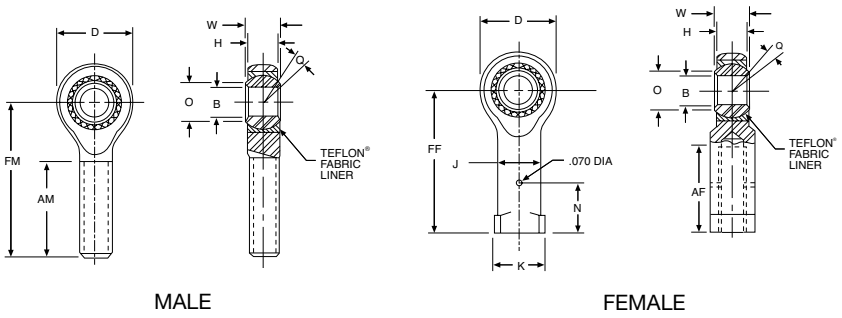

MALE FEMALE

ALL DIMENSIONS IN INCHES

Bore B	W	H	AM	FM	AF	FF	D	O	J	K	N	Ball Dia.	Q	Thread
+ .0015 −.0005	+.000 −.005	±.005	+.060 −.030	±.010	+.060 −.030	±.010	±.010	REF	±.010	±.010	+.000 −.005	REF	REF	Class UNF-3
.1900	.312	.250	.750	1.250	.562	1.062	.625	.306	.312	.406	.312	.406	±6-1/2°	10-32
.2500	.375	.281	1.000	1.562	.750	1.312	.750	.331	.375	.468	.312	.500	±8°	1/4-28
.3125	.437	.344	1.250	1.875	.750	1.375	.875	.447	.437	.500	.406	.625	±7°	5/16-24
.3750	.500	.406	1.250	1.938	.937	1.625	1.000	.517	.562	.687	.469	.713	±6°	3/8-24
.4375	.562	.437	1.375	2.125	1.062	1.812	1.125	.586	.625	.750	.531	.813	±7°	7/16-20
.5000	.625	.500	1.500	2.438	1.187	2.125	1.312	.656	.750	.875	594	.906	±6°	1/2-20
.6250	.750	.562	1.625	2.625	1.500	2.500	1.500	.832	.875	1.000	.750	1.125	±8°	5/8-18
.7500	.875	.687	1.750	2.875	1.750	2.875	1.750	.978	1.000	1.125	.875	1.312	±7°	3/4-16
1.0000	1.375	1.000(1)	2.125	4.125	2.125	4.125	2.750(2)	1.269	1.500	1.625	—	1.875	±7°	1-1/4-12

(1) Tolerance +.015/–.010 (2) Tolerance +.030/–.010

SPECIFICATIONS

Outer Member	Low carbon steel plated for corrosion resistance
Ball	52100 Steel - heat treated Rc 56 Min hard chrome plated
Insert	Carbon steel - plated for corrosion resistance or stainless steel
Liner	Teflon® fabric permanently bonded to insert I.D.

Teflon® is a trade name of E.I. DuPont de Nemours & Co. Inc.

LOAD DATA

Basic Bearing Number	Ultimate Static Load (Radial) Rating (Lbs.)		Approx. Wt. (Lbs.)	
	Male	Female	Male	Female
3	1,169	1,531	.03	.04
4	2,158	2,539	.04	.06
5	2,784	3,133	.08	.09
6	3,915	3,915	.12	.16
7	4,218	4,218	.16	.20
8	6,660	6,660	.25	.32
10	7,364	7,364	.39	.48
12	11,518	11,518	.60	.72
16	43,540	43,540	2.41	2.13

NOTE:

For Engineering Data, see Pages 207-211.

ORDER BY CATALOG NUMBER OR ITEM CODE

Bore	Right Hand		Left Hand	
	Catalog Number	Item Code	Catalog Number	Item Code
MALE TYPE				
.1900	HME-3	48038	HMLE-3	48059
.2500	HME-4	48039	—	—
.3125	HME-5	48040	HMLE-5	48065
.3750	HME-6	48041	HMLE-6	48067
.4375	HME-7	48043	HMLE-7	48068
.5000	HME-8	48044	HMLE-8	48069
.6250	HME-10	48045	HMLE-10	48076
.7500	HME-12	48046	HMLE-12	48077
1.0000	HME-16	48047	HMLE-16	48078
FEMALE TYPE				
.1900	HFE-3	48079	HFLE-3	48004
.2500	HFE-4	48080	HFLE-4	48006
.3125	HFE-5	48086	HFLE-5	48007
.3750	HFE-6	48088	HFLE-6	48008
.4375	HFE-7	48091	HFLE-7	48010
.5000	HFE-8	48093	HFLE-8	48012
.6250	HFE-10	48094	HFLE-10	48014
.7500	HFE-12	48095	HFLE-12	46017
1.000	HFE-16	48096	HFLE-16	48019

HMX Male/HFX Female Series

Rod Ends – Extra Capacity

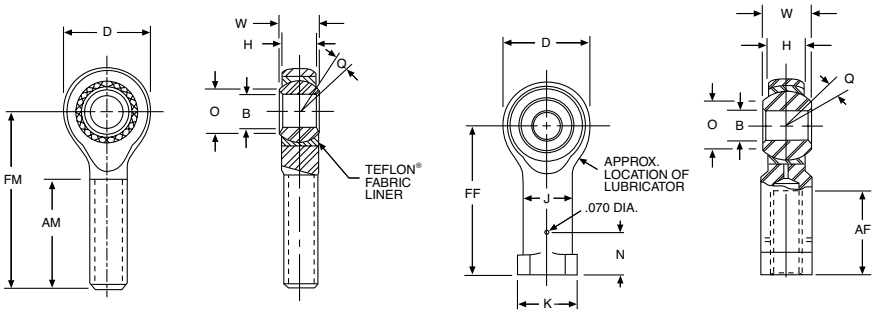

MALE FEMALE

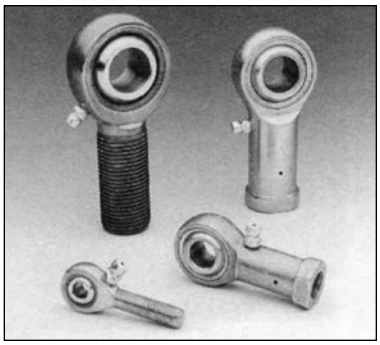

ALL DIMENSIONS IN INCHES

Bore B	W	H	AM	FM	AF	FF	D	O	J	K	N	Ball Dia.	Q	Female Thread	Male Thread
+.0015 −.0005	+.000 −.005	±.005	+.060 −.030	±.010	+.060 −.030	±.010	±.010	REF	±.010	±.010	+.000 −.005	REF	REF	Class UNF-3B	Class UNF-3A
.2500	.375	.281	1.000	1.562	.750	1.312	.750	.331	.375	.468	.312	.500	±8°	1/4-28	5/16-24
.3125	.437	.344	1.250	1.875	.750	1.375	.875	.447	.437	.500	.406	.625	±7°	5/16-24	3/8-24
.3750	.500	.406	1.250	1.938	.937	1.625	1.000	.517	.562	.687	.469	.718	±6°	3/8-24	7/16-20
.4375	.562	.437	1.375	2.125	1.062	1.812	1.125	.586	.625	.750	.531	.813	±7°	7/16-20	1/2-20
.5000	.625	.500	1.500	2.438	1.187	2.125	1.312	.656	.750	.875	.594	.906	±6°	1/2-20	5/8-18
.6250	.750	.562	1.625	2.625	1.500	2.500	1.500	.832	.875	1.000	.750	1.125	±8°	5/8-18	3/4-16
.7500	.875	.687	1.750	2.875	1.750	2.875	1.750	.978	1.000	1.125	.875	1.312	±7°	3/4-16	7/8-14
.7500	.875	.687	1.750	2.875	1.750	2.875	1.750	.978	1.000	1.125	.875	1.312	±7°	3/4-16	7/8-14

ORDER BY CATALOG NUMBER OR ITEM CODE

Bore	Right Hand with Lubricator		Left Hand with Lubricator	
	Catalog Number	Item Code	Catalog Number	Item Code
MALE TYPE				
.2500	HMX-4G	48337	HMXL-4G	48344
.3125	HMX-5G	48338	HMXL-5G	48345
.3750	HMX-6G	48339	HMXL-6G	48346
.4375	HMX-7G	48340	HMXL-7G	48347
.5000	HMX-8G	48341	HMXL-8G	48348
.6250	HMX-10G	48342		
.7500	HMX-12G	48343	HMXL-12G	48350
FEMALE TYPE				
.2500	HFX-4G	48323	HFXL-4G	48330
.3125	HFX-5G	48324	HFXL-5G	48331
.3750	HFX-6G	48325	HFXL-6G	48332
.4375	HFX-7G	48326	HFXL-7G	48333
.5000	HFX-8G	48327	HFXL-8G	48334
.6250	HFX-10G	48328	HFXL-10G	48335
.7500	HFX-12G	48329	HFXL-12G	46336

NOTE

For Engineering Data, see Pages 207-211.

SPECIFICATIONS

	HMX Series	HFX Series
Outer Member	Alloy steel, heat treated magnetic particle inserted plated for corrosion resistance	Steel alloy, heat treated plated for corrosion resistance
Ball	52100 steel heat treated, hard chrome plated	52100 steel heat treated, hard chrome plated
Insert	Aluminum bronze	Alloy steel, heat treated plated for corrosion resistance or stainless steel, heat treated

LOAD DATA

Basic Bearing Number	Ultimate Static Load (Radial) (Lbs.)		Approx. Wt. (Lbs.)	
	Male	Female	Male	Female
4	5,390	6,190	.06	.06
5	7,500	7,639	.09	.09
6	9,590	9,544	.13	.15
7	11,000	10,285	.18	.20
8	13,575	16,238	.30	.32
10	17,300	17,955	.46	.48
12	23,225	28,081	.72	.72

Self-Aligning Bearings

LHA-LHB-LHSS Series

Sphericals – Precision



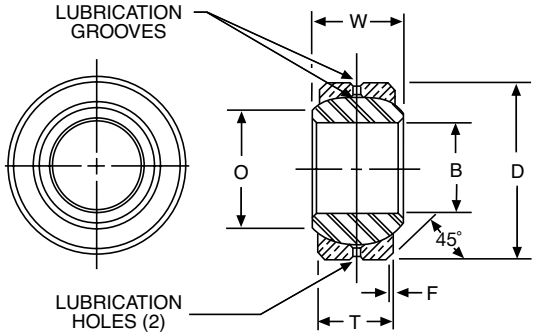

SPECIFICATIONS

	LHA	LHB	LHSS
Outer Member	4130 Steel or equal heat treated plated for corrosion resistance	Aluminum Bronze	410 or equal Stainless Steel
Ball	52100 Steel heat treated, plated for corrosion resistance and wear		

ORDER BY CATALOG NUMBER OR ITEM CODE
ALL DIMENSIONS IN INCHES

Bore B	D	F	T	W	O	Ball Dia.	LHA Series		LHB Series		LHSS Series	
							Catalog Number	Item Code	Catalog Number	Item Code	Catalog Number	Item Code
+.0000 −.0005	+.0000 −.0005	REF	±.005	±.005	REF	REF						
.1650	.4687	.020	.187	.250	.235	.343	LHA-2	48405	LHB-2	48417	LHSS-2	48429
.1900	.5625	.020	.218	.281	.293	.406	LHA-3	48406	LHB-3	48418	LHSS-3	48430
.2500	.6562	.022	.250	.343	.364	.500	LHA-4	48407	LHB-4	48419	LHSS-4	48431
.3125	.7500	.032	.281	.375	.419	.562	LHA-5	48408	LHB-5	48420	LHSS-5	48432
.3750	.8125	.032	.312	.406	.517	.656	LHA-6	48409	LHB-6	48421	LHSS-6	48433
.4375	.9062	.032	.343	.437	.572	.718	LHA-7	48410	LHB-7	48422	LHSS-7	48434
.5000	1.0000	.032	.390	.500	.642	.813	LHA-8	48411	LHB-8	48423	LHSS-8	48435
.5625	1.0937	.032	.437	.562	.670	.906	LHA-9	48412	LHB-9	48424	LHSS-9	48436
.6250	1.1875	.032	.500	.625	.739	.968	LHA-10	48413	LHB-10	48425	LHSS-10	48437
.7500	1.4375	.044	.593	.750	.920	1.187	LHA-12	48414	LHB-12	48426	LHSS-12	48438
.8750	1.5625	.044	.703	.875	.980	1.312	LHA-14	48415	LHB-14	48427	LHSS-14	48439
1.0000	1.7500	.044	.797	1.000	1.118	1.500	LHA-16	48416	LHB-16	48428	LHSS-16	48440

LOAD DATA

Basic Bearing Number	Maximum Static Radial Load (Lbs.)		Approx. Weight (Lbs.)
	LHA/LHSS	LHB	
2	2,000	1,000	.01
3	5,400	2,700	.02
4	8,400	4,200	.02
5	11,600	5,800	.03
6	15,600	7,800	.04
7	18,600	9,300	.05
8	22,400	11,200	.07
9	30,000	15,000	.09
10	40,000	20,000	.11
12	50,000	30,000	.21
14	86,000	43,000	.27
16	104,000	52,000	.39

NOTES:

For Engineering Data, see Pages 207-211.
For Housing Bores, see Page 210.

LHSSE-LHSSVV Series

Sphericals – Precision; Self Lubricating

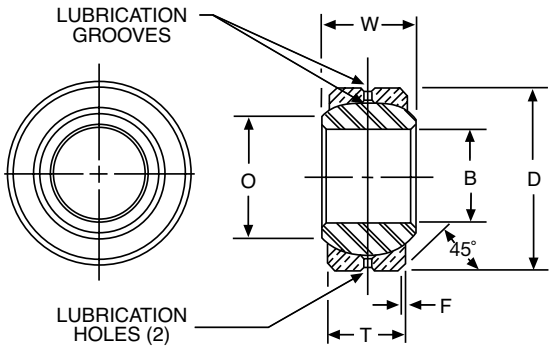



ORDER BY CATALOG NUMBER OR ITEM CODE
ALL DIMENSIONS IN INCHES

Bore B	O	D	F	T	W	Ball Dia.	LHSSE Series		LHSSVV Series	
							Catalog Number	Item Code	Catalog Number	Item Code
+.0000 −.0005	REF	+.0000 −.0005	REF	±.005	+.000 −.005	REF				
.1650	.235	.4687	.020	.187	.250	.343	LHSSE-2	48021	LHSSVV-2	48453
.1900	.293	.5625	.020	.218	.281	.406	LHSSE-3	48023	LHSSVV-3	48454
.2500	.364	.6562	.022	.250	.343	.500	LHSSE-4	48025	LHSSVV-4	48455
.3125	.419	.7500	.032	.281	.375	.562	LHSSE-5	48027	LHSSVV-5	48456
.3750	.517	.8125	.032	.312	.406	.656	LHSSE-6	48029	LHSSVV-6	48457
.4375	.572	.9062	.032	.343	.437	.718	LHSSE-7	48030	LHSSVV-7	48458
.5000	.642	1.0000	.032	.390	.500	.813	LHSSE-8	48032	LHSSVV-8	48459
.5625	.670	1.0937	.032	.437	.562	.906	LHSSE-9	48033	LHSSVV-9	48460
.6250	.739	1.1875	.032	.500	.625	.968	LHSSE-10	48034	LHSSVV-10	48461
.7500	.920	1.4375	.044	.593	.750	1.187	LHSSE-12	48035	LHSSVV-12	48462
.8750	.980	1.5625	.044	.703	.875	1.312	LHSSE-14	48036	LHSSVV-14	48463
1.0000	1.118	1.7500	.044	.797	1.000	1.500	LHSSE-16	48037	LHSSVV-16	48464

LOAD DATA

Basic Bearing Number	Maximum Static Radial Load (Lbs.)		Approx. Wt. (Lbs.)
	LHSSE	LHSSVV	
2	1,200	1,200	.010
3	3,250	3,250	.014
4	4,900	4,900	.022
5	6,450	6,450	.03
6	8,250	8,250	.04
7	10,200	10,200	.05
8	13,600	13,600	.07
9	15,900	15,900	.09
10	21,000	21,000	.11
12	30,000	30,000	.21
14	41,100	41,100	.26
16	54,700	54,700	.39

SPECIFICATIONS

	LHSSE Series	LHSSVV Series
Outer Member	410 Stainless Steel	410 Stainless Steel
Ball	52100 Steel heat treated plated for corrosion resistance and wear	52100 Steel heat treated plated for corrosion resistance and wear
Self Lubricating Liner	Teflon®	Teflon® Fabric

Teflon® is a trade name of E. I. DuPont de Nemours & Co. Inc.

NOTES:

For Engineering Data, see Pages 207-211.

Self-Aligning Bearings

LS/LSS Series

Sphericals – Special Purpose

F



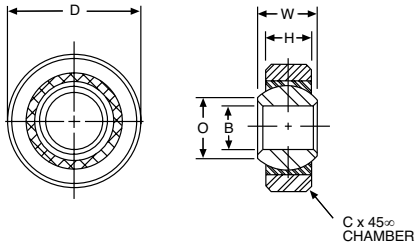

LS/LSS 3 – 10

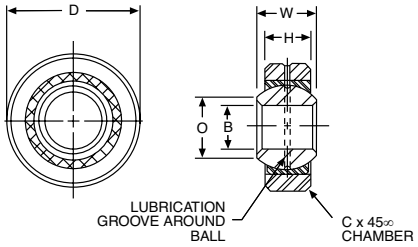

LS 12 – 30

ORDER BY CATALOG NUMBER OR ITEM CODE
ALL DIMENSIONS IN INCHES

Bore B	D	H	w	Ball Dia.	O	C	LS Series	
+.0025 –.0005	+.0000 –.0005	±.005	±.005	REF	REF	+.015 –.000	Catalog Number	Item Code
.1900	.6250	.187	.281	.400	.285	.016	LS-3	48381
.2500	.7500	.281	.375	.510	.346	.016	LS-4	48382
.3125	.8750	.313	.437	.618	.438	.016	LS-5	48383
.3750	1.0000	.375	.500	.713	.508	.016	LS-6	48384
.4375	1.1875	.437	.562	.806	.578	.032	LS-7	48385
.5000	1.3125	.531	.687	.931	.627	.044	LS-8	48386
.6250	1.5625	.687	.875	1.178	.789	.044	LS-10	48387
.7500	2.2500	.937	1.250	1.625	1.038	.044	LS-12	48388
1.0000	2.3750	.875	1.125	1.750	1.345	.062	LS-16	48389
1.1875	2.6250	1.000	1.250	2.000	1.562	.085	LS-19	48390
1.5000	3.2500	1.250	1.500	2.500	2.000	.085	LS-24	48391
1.8750	4.0000	1.313	1.625	3.000	2.521	.125	LS-30	48392

Bore B	D	H	w	Ball Dia.	O	C	LSS Series	
+.0000 –.0005	+.0000 –.0005	±.005 -.005	±.000 -.000	(REF)	(REF)	+.000 –.005	Catalog Number	Item Code
.1900	.5625	.218	.281	.406	.293	.020	LSS-3	48394
.2500	.6562	.250	.343	.500	.364	.022	LSS-4	48395
.3125	.7500	.281	.375	.562	.419	.032	LSS-5	48396
.3750	.8125	.312	.406	.656	.517	.032	LSS-6	48397
.4375	.9062	.343	.437	.718	.572	.032	LSS-7	48398
.5000	1.0000	.390	.500	.813	.642	.032	LSS-8	48399
.5625	1.0937	.437	.562	.906	.670	.032	LSS-9	48400
.6250	1.1875	.500	.625	.968	.739	.032	LSS-10	48401
.7500	1.4375	.593	.750	1.187	.920	.044	LSS-12	48402
.8750	1.5625	.703	.875	1.312	.980	.044	LSS-14	48403
1.0000	1.7500	.797	1.000	1.500	1.118	.044	LSS-16	48404

NOTES:

For Engineering Data, see Pages 207-211.

SPECIFICATIONS

	LS Series		LSS Series
	Size 3 - 10	Size 12 - 30	All
Outer Member	Low carbon steel, plated for corrosion resistance	Carbon steel, cadmium or zinc plated	4130 Steel or equal, RC 36-42 cadmium plated
Ball	Low carbon steel, case hardened, plated for corrosion	Chrome steel heat treated	S.A.E. 52100 Steel heat treated and chrome plated
Insert	Sintered Bronze Oil impregnated	Brass	None

LOAD DATA

	LS SERIES		LSS SERIES	
Basic Bearing Number	Maximum Static Radial Load in Lbs.	Approx. Wt.(Lbs.)	Maximum Static Radial Load in Lbs.	Approx. Wt.(Lbs.)
3	1,520	.02	5,400	.014
4	2,900	.04	8,400	.022
5	3,900	.05	11,600	.030
6	5,400	.08	15,600	.038
7	7,100	.12	18,600	.048
8	9,900	.18	22,400	.065
9			30,000	.086
10	16,300	.33	40,000	.110
12	47,600	.94	50,000	.204
14			86,000	.263
16	48,200	1.00	104,000	.386
19	63,000	1.27		
24	98,000	2.38		
30	123,000	3.75		



Environment and Mounting

Corrosive Environments

All components are protected by plating or corrosion inhibiting oil.

Lubrication and Contaminants

The rating of all series with metal-on-metal bearing members is based on the presence of an adequate lubricant film. Ratings for the Reinforced Nylon race series are based on dry operation with the inherent lubrication provided by the bronze ball.

A controlled internal clearance is present in all metal-on-metal bearings. The reinforced Nylon race series are molded with a positive interference fit-up which excludes contaminants and results in an excellent self-wiping action.

Protection from contaminants should be provided wherever possible. Grease fittings or lubricant entry provisions are available for most metal-on-metal bearings. Periodic relubrication will improve operation under severe conditions. Contaminants are also flushed out during relubrication. Where relubrication is difficult or impractical, the self-lubricating features of the sintered ball or race materials and the reinforced Nylon race provide built-in protection.

Caution:

The lubricator mounting hole in housings reduces the strength of housings by varying amounts depending on size and location.

Mounting

Sintered bronze balls may be distorted by excessive clamping pressure. Care should be used in tightening a nut against the ball to prevent distortion or binding. Caution: certain ANSI bolt series with fillets under the head will interfere with proper assembly. Use of a countersunk washer is suggested.

Temperature and Water Immersion

Self Aligning bearings may be operated between –30°F and +300°F, with wider ranges obtained by the use of special lubricants. Reinforced nylon race bearings may be operated between –30°F and +150°F. Prolonged immersion of Nylon races in water can cause an increase in torque.

Engineering Data

F

Mounting and Misalignment Factors

The single biggest reason rod end bearings are used is for their ability to absorb gross misalignment and still transmit motion in the preferred direction. To overcome misalignment, the ball or housing rotates as far as necessary or until it strikes an obstruction. The amount of misalignment a bearing can absorb is limited by the mounting arrangement. Shown below are common mounting arrangements, along with an indication of the misalignment absorbing capabilities of each. The table lists the maximum angular displacement in each mounting mode.

Rod Ends offer the least misalignment absorbing capability when fitted closely between the legs of a clevis or when the ball is bolted against the face of a lever. The limit is reached when the housing head strikes the mounting member.

Adding a standoff washer with the same diameter as the ball face increases misalignment absorbing capability. The limit is reached when the washer strikes the face.

The greatest misalignment compensation results when the ball is fitted with a stud, the shank diameter of which equals the ball bore *chamfer*, (see A). One piece ball studs (see B) of similar proportions also allow similar misalignment. Exceeding these dimensional limits may deform the race, so care should be taken to choose the proper mounting arrangement.

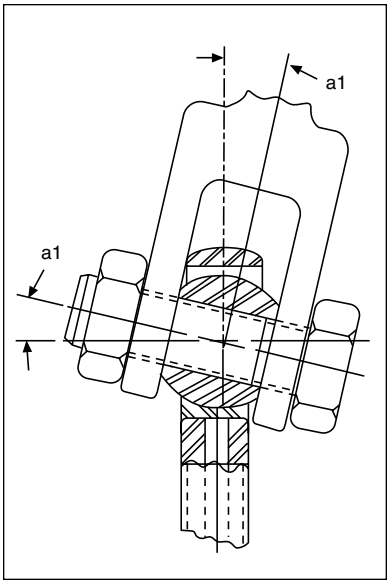

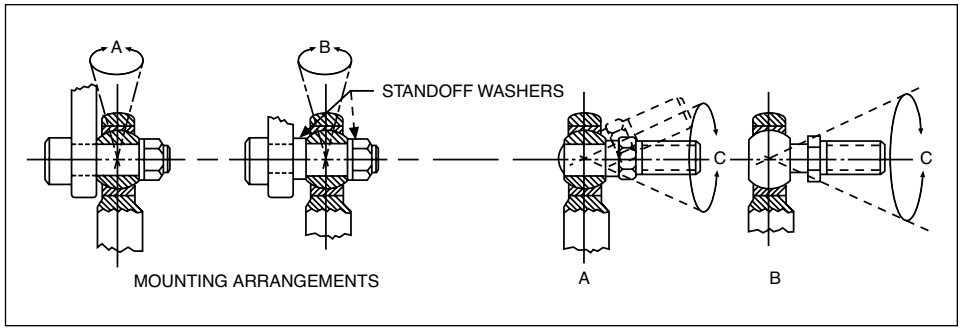

Reference Letters

D – Head Diameter or Outer Race Diameter
H – Housing Width
W – Ball Width
$A_1 = \text{Sin}^{-1}\frac{W}{D} - \text{Sin}^{-1}\frac{H}{D}$

ANGLE OF MISALIGNMENT (A1)

Size	SERIES			
	KF	HM-C/HF-C HM/HF	CMHD/CFHD	HME/HFE HMX/HFX
-3	±15°	±5-1/2°	±6°	±6-1/2°
-4	±15°	±6-1/2°	±7°	±8°
-5	±15°	±5-1/2°	±6°	±7°
-6	±15°	±5°	±5-1/2°	±6°
-7	—	±6°	±6°	±7°
-8	±15°	±5°	±5°	±6°
-10	—	±6°	±7-1/2°	±8°
-12	—	±5°	±6°	±7°
-16	—	±7°	—	±7°

Spherical bearings offer a greater variety of mounting positions compared to the rod end bearings. The angle of misalignment is calculated based on its mounting arrangement. Shown are three common mountings and the formulae for calculating the angle of misalignment.

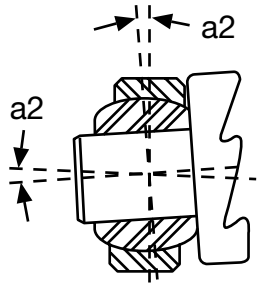

$a_2 = \text{Sin}^{-1}\frac{W}{A} - \text{Sin}^{-1}\frac{H}{A}$

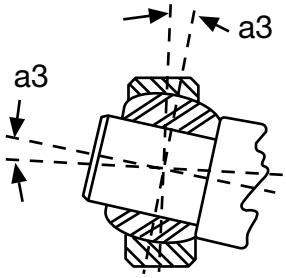

$a_3 = \text{Sin}^{-1}\frac{W}{E} - \text{Sin}^{-1}\frac{H}{E}$

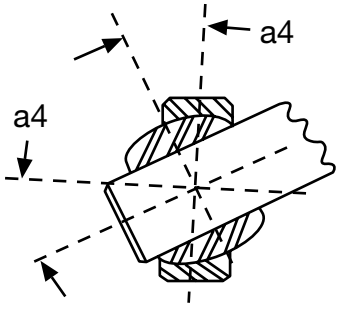

$a_4 = \text{Sin}^{-1}\frac{B}{E} - \text{Sin}^{-1}\frac{H}{E}$

Reference Letters

B – Ball Bore
C – Outer Race Chamfer
D – Head Diameter or Outer Race Diameter
E – Ball Diameter
H – Housing Width
A – $\sqrt{(D\text{-}2C)^2 + H^2}$
W – Ball Width

SPHERICAL BEARINGS

Series LS	Mounting Arrangements			Series LHA LHB LHSS LHSSE LHSSVV	Mounting Arrangements		
	a_2	a_3	a_4		a_2	a_3	a_4
-3	±9°	±16 1/2°	±34 1/2°	-2	±8 1/2°	±13 1/2°	±28°
-4	±8°	±14 1/2°	±29°	-3	±7°	±11°	±29 1/2°
-5	±9°	±14°	±30°	-4	±9°	±13°	±30°
-6	±8°	±12 1/2°	±27°	-5	±8°	±12°	±26°
-7	±6 1/2°	±11°	±25°	-6	±7 1/2°	±10 1/2°	±23°
-8	±7 1/2°	±12 1/2°	±23°	-7	±6 1/2°	±9 1/2°	±20 1/2°
-10	±8°	±12°	±23°	-8	±7°	±10°	±20°
-12	±9°	±15°	±27°	-9	±7 1/2°	±10°	±20°
-16	±6 1/2°	±10°	±25°	-10	±7°	±9°	±19°
-19	±6°	±18 1/2°	±23 1/2°	-12	±7°	±9°	±21°
-24	±5°	±7°	±23°	-14	±7°	±9°	±16°
-30	±5°	±7°	±25°	-16	±7 1/2°	±9 1/2°	±16°

Engineering Data

Housing Bore for Press Fit of Spherical Bearings

Basic Bearing Size	D Bearing O.D. +.0000 /-.0005	HOUSING BORE RECOMMENDED (Aluminum or Steel)
LS SERIES		
3	.6250	.6248/.6243
4	.7500	.7498/.7493
5	.8750	.8748/.8743
6	1.0000	.9998/.9993
7	1.1875	1.1873/1.1868
8	1.3125	1.3123/1.3118
10	1.5625	1.5623/1.5618
12	2.2500	2.2498/2.2493
16	2.3750	2.3748/2.3743
19	2.6250	2.6248/2.6243
24	3.2500	3.2498/3.2493
30	4.0000	3.9998/3.9993

Basic Bearing Size	D Bearing O.D. +.0000 /-.0005	HOUSING BORE RECOMMENDED (Aluminum or Steel)
LHA, LHB, LHSSE, LHSSVV SERIES		
2	.4687	.4685/.4680
3	.5625	.5623/.5618
4	.6562	.6560/.6555
5	.7500	.7498/.7493
6	.8125	.8123/.8118
7	.9062	.9060/.9055
8	1.0000	.9998/.9993
9	1.0937	1.0935/1.0930
10	1.1875	1.1873/1.1868
12	1.4375	1.4373/1.4368
14	1.5625	1.5623/1.5618
16	1.7500	1.7498/1.7493

Stud – Specifications

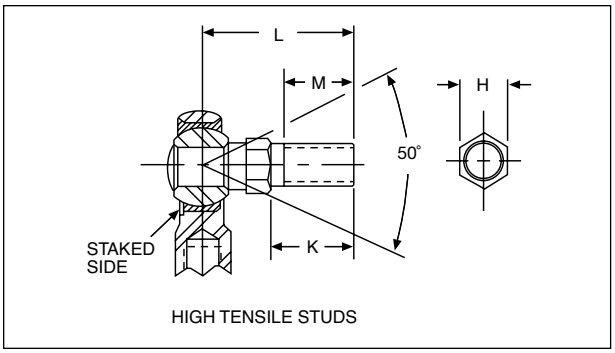

HIGH TENSILE STUDS

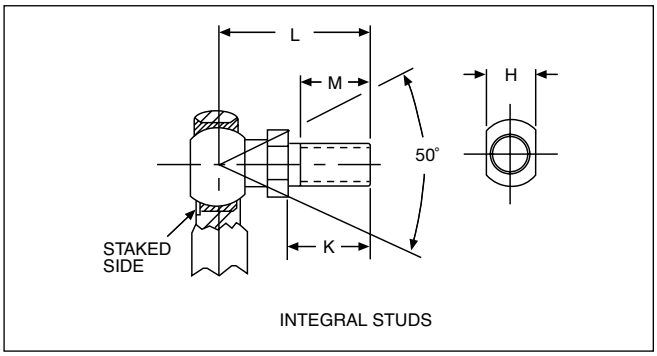

INTEGRAL STUDS

Steel studs are available in the CMHD/CFHD, HM/HF, HM-C/HF-C and KF Series to facilitate right angle connections. Standard misalignment is 50° in all sizes. Threads are only available as right hand. There are two types of studs available:

High Tensile Steel Studs–(Y Suffix)

High tensile steel studs are available for sizes 3 through 12. These studs are machined for exact fit-up within the ball bore, providing smooth operation and high performance. The studs are assembled to maintain the internal clearances inherent in the Rod Ends. They are permanently secured in the bore of the ball, threaded for easy mounting and have a hex section to facilitate tightening. The stud is designed to accommodate 50° misalignment in any direction, and provides maximum load capacity.

Integral Ball Studs–(S Suffix)

The ball and stud are combined into a single unit of case hardened machined plated steel. Wrench flats are provided for tightening. These studs offer the same operational features as the high tensile studs, with slightly reduced load capacity. The integral studs are available in sizes 3 through 8 only.

Numbering System

High Tensile Steel Studs

Use a “Y” suffix after the complete catalog number

Example: CFHDL-3**Y**

Integral Ball Stud

Use a “S” suffix after the complete catalog number

Example: HF-5**S**

Materials

Rod End: Refer to basic Rod End specification page

Stud: High tensile steel - Plated for corrosion resistance

Integral Stud: Low carbon steel - case hardened - plated for corrosion resistance

DIMENSIONS AND LOAD DATA

DIMENSIONS IN INCHES

To Fit Rod End Size	Stud Thread UNF-2	H ±.005	K ±.010	L ±.015	M MIN	Static Load Rating (Lbs.) High-Tensile Stud	Static Load Rating (Lbs.) Ball Stud
3	10-32	.312	.500	1.016	.437	350	250
4	1/4-28	.375	.562	1.047	.500	850	550
5	5/16-24	.438	.687	1.234	.594	1,600	1,050
6	3/8-24	.500	.906	1.570	.812	2,400	1,500
7	7/16-20	.625	1.125	1.968	.938	2,700	1,800
8	1/2-20	.625	1.125	2.000	.938	3,100	2,200
10	5/8-18	.750	1.500	2.500	1.250	4,500	N/A
12	3/4-16	1.000	1.812	3.000	1.625	6,000	N/A

Mounted Bearings

Replacement Bearings for Setscrew Locking Series



Mounted Bearings offer a simple, convenient method of providing load support. Selection for most applications may be readily accomplished from a single selection chart, based on shaft size, radial and thrust load requirements. Installation normally requires only bolting to a suitable mounting surface and securing bearing to shaft with setscrews or eccentric locking collar provided.

The Boston Gear Mounted Bearing line is one of the most comprehensive available to industry. Ranging from light duty, plain bearing blocks to precision units. They all feature Boston Gear's tradition of design excellence and precision manufacture.

Light Duty Series

PPB — Split cast iron housing with bore and mounting base machined.

SRP — PPB Series with a Bost-Bronz (oil impregnated) sleeve bearing.

PS — Stamped steel housing with pillow block, 2 bolt and 3 bolt flange configuration. Extended inner race, (2) setscrews locking to shaft. Prelubricated spherical O.D. bearing.

XL — Ductile iron housing with pillow block, 2 bolt and 3 bolt flange configuration. Extended inner race, (2) setscrews locking to shaft. Prelubricated spherical O.D. bearing.

Standard Duty Series

All Series — Solid one-piece cast iron housing of American manufacture with removable zerk-type threaded grease fitting. Precision machined base and spherical bore. Available in pillow block, 2 bolt and 4 bolt flanges.

H & L Series — Eccentric shaft lock of international manufacture.

S Series — Extended inner race with double setscrews for positive shaft locking.

Medium Duty Series

MB Series — Solid one-piece heavy duty cast iron housing with removable zerk-type threaded grease fitting. Available in pillow block 4 bolt flange and piloted flange with precision machined base, pilot diameter and spherical bore. Spherical O.D. bearing of international manufacture with extended inner race and double setscrews for positive shaft locking and smoothness of operation.

Replacement Bearings and Locking Collars for Eccentric Locking Collar Series



ORDER BY CATALOG NUMBER OR ITEM CODE

Bore	INTERNATIONAL BEARINGS					
	Replacement Bearings		Locking Collars		Bearing and Carrier (A Series Only)	
	Catalog Number	Item Code	Catalog Number	Item Code	Catalog Number	Item Code
1/2	NX3008M	67374	NX3008LC	67373	3A-1/2 B&C	07030
5/8	NX3010M	67377	—	—	3A-5/8 B&C	07032
3/4	NX4012M	67380	NX4012LC	67379	4A-3/4 B&C	07014
7/8	NX5014M	67383	—	—	5A-7/8 B&C	07034
15/16	NX5015M	67386	NX5015LC	67385	5A-15/16 B&C	07036
1	NX5016M	67389	NX5016LC	67388	5A-1 B&C	07022
1-1/8	NX6018M	67392	—	—	6A-1-1/8 B&C	07038
1-3/16	NX6019M	67395	NX6019LC	67394	6A-1-3/16 B&C	07040
1-1/4S	NX6020M	67398	NX6020LC	67397	6A-1-1/4 B&C	07042
1-1/4	NX7104M	67401	—	—	—	—
1-5/16	NX7105M	67404	NX7105LC	67403	—	—
1-3/8	NX7106M	67407	NX7106LC	67406	—	—
1-7/16	NX7107M	67410	NX7107LC	67409	—	—
1-1/2	NX8108M	67413	NX8108LC	67412	—	—
1-5/8	NX9110M	67416	NX9110LC	67415	—	—
1-11/16	NX9111M	67419	NX9111LC	67418	—	—
1-3/4	NX9112M	67422	NX9112LC	67421	—	—
1-15/16	NX10115M	67425	NX10115LC	67424	—	—
2	NX11200M	67428	NX11200LC	67427	—	—
2-3/16	NX11203M	67431	NX11203LC	67430	—	—
2-1/4	NX11204M	67434	—	—	—	—
2-7/16	NX11207M	67437	NX11207LC	67436	—	—

(FOR USE WITH THE L, H, F, T AND A SERIES BEARINGS)

Mounted Bearings

Replacement Bearings for Setscrew Locking Series



PS & XL SERIES

Bore	Catalog Number	Item Code
1/2	NBG15-1/2	68880
5/8	NBG15-5/8	68881
3/4	NBG15-3/4	68882
7/8	NBG15-7/8	68883
15/16	NBG15-15/16	68884
1	NBG15-1	68885
1-1/16	NBG15-1-1/16	68886
1-1/8	NBG15-1-1/8	68887
1-3/16	NBG15-1-3/16	68888
1-1/4S	NBG15-1-1/4S	68889
1-3/8	NBG15-1-3/8	68891
1-7/16	NBG15-1-7/16	68892

(FOR USE WITH THE PS, PS2, PS3, XL, XL2 AND XL3 SERIES BEARINGS)

S SERIES

Bore	Catalog Number	Item Code
1/2	NBG25-1/2	68893
5/8	NBG25-5/8	68894
3/4	NBG25-3/4	68895
7/8	NBG25-7/8	68896
15/16	NBG25-15/16	68897
1	NBG25-1	68898
1-1/16	NBG25-1-1/16	68899
1-1/8	NBG25-1-1/8	68900
1-3/16	NBG25-1-3/16	68901
1-1/4S	NBG25-1-1/4S	68902
1-5/16	NBG25-1-5/16	68903
1-3/8	NBG25-1-3/8	68904
1-7/16	NBG25-1-7/16	68905
1-1/2	NBG25-1-1/2	68906
1-5/8	NBG25-1-5/8	68907
1-11/16	NBG25-1-11/16	68908
1-3/4	NBG25-1-3/4	68909
1-15/16	NBG25-1-15/16	68910
2	NBG25-2	68911
2-3/16	NBG25-2-3/16	68912
2-1/4	NBG25-2-1/4	68913
2-7/16	NBG25-2-7/16	68914

(FOR USE WITH THE SF, SH, SL AND ST SERIES BEARINGS)

MB SERIES

Bore	Catalog Number	Item Code
1-7/16	NBG35-1-7/16	68915
1-1/2	NBG35-1-1/2	68916
1-11/16	NBG35-1-11/16	68917
1-3/4	NBG35-1-3/4	68918
1-15/16	NBG35-1-15/16	68919
2	NBG35-2	68920
2-3/16	NBG35-2-3/16	68921
2-1/4	NBG35-2-1/4	68922
2-7/16	NBG35-2-7/16	68923
2-1/2	NBG35-2-1/2	68924
2-11/16	NBG35-2-11/16	68925
2-15/16	NBG25-2-15/16	68926
3	NBG35-3	68927
3-3/16	NBG35-3-3/16	68928
3-1/4	NBG35-3-1/4	68929
3-7/16	NBG35-3-7/16	68930
3-1/2	NBG35-3-1/2	68931

(FOR USE WITH THE MB, MBF AND MBP SERIES BEARINGS)

PPB Series SRP Series – With Bost-Bronz Bushings

Pillow Blocks – Light Duty Split Cast Iron

The bottom surface and the split surfaces are ground. Both end surfaces of the bore are finished perpendicular to the base. Bolt holes in the base are slotted except Cat. No. PPB4 which has drilled holes. PPB Series blocks have an oil hole drilled in center of cap.†

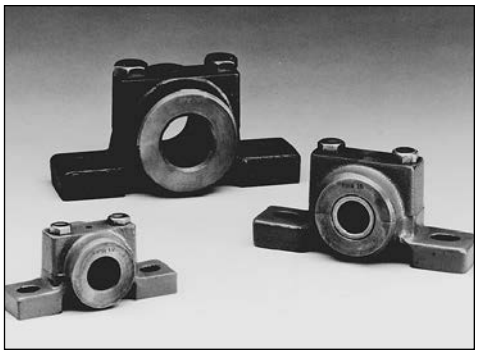

ORDER BY CATALOG NUMBER OR ITEM CODE

Bore	PPB SERIES		SRP SERIES			
			Pillow Blocks		Replacement Bearing	
	Catalog Number	Item Code	Catalog Number	Item Code	Catalog Number	Item Code
1/4	PPB4	34304	SRP4	34434	B46-2	34542
3/8	PPB6	34306	SRP6	34436	B68-3	34634
1/2	PPB8	34308	SRP8	34438	B812-4	34752
5/8	PPB10	34310	SRP10	34440	B1014-6	34852
3/4	PPB12	34312	SRP12	34442	B1216-6	34934
7/8	PPB14	34314	—	—	—	—
15/16	PPB15	34316	SRP15	34444	B1520-8	35042
1	PPB16	34318	SRP16	34446	B1620-8	35068
1-3/16	PPB19	34320	SRP19	34448	B1924-8	35172
1-1/4	PPB20	34322	SRP20	34450	B2024-8	35186
1-7/16	PPB23	34324	—	—	—	—
1-1/2	PPB24	34326	—	—	—	—

*Two required.

†The 1/4" size is made of brass and has no oil holes.

STANDARD TOLERANCES

DIMENSIONS		TOLERANCE
PPB Series		
Bore	All	+.000 to –.001
SRP Series		
Bore	.252–1.003 1.1905–1.2530	+.000 to –.001 +.000 to –.002

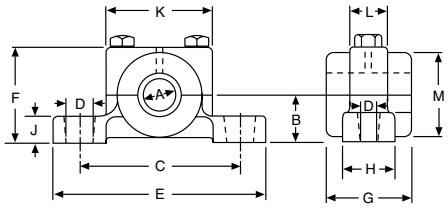

ALL DIMENSIONS IN INCHES

A (Bore)	B	C	D	E	F	G	H	J	K	L	M
PPB SERIES											
.2500	1/4	1-1/8	1/8	1-1/2	1/2	1/2	3/8	1/4	3/4	3/8	7/16
.3760 .5010	9/16	2-1/8	5/16x3/16	2-3/4	1-1/8	1	5/8	5/16	1-7/16	7/16	1
.6260 .7510	13/16	2-7/8	1/2x5/16	3-3/4	1-5/8	1-1/2	1	1/2	2	11/16	1-1/2
.8760 .9385 1.0010	1-1/8	3-3/4	5/8x3/8	5	2-1/4	2	1-1/4	5/8	2-1/2	7/8	2
1.1885 1.2510 1.4385 1.5010	1-3/8	4-1/2	3/4x1/2	6	2-3/4	2-1/2	1-1/2	3/4	3	1	2-1/2
SRP SERIES											
.2510 .3770	9/16	2-1/8	5/16x3/16	2-3/4	1-1/8	1	5/8	5/16	1-7/16	7/16	1
.5020	13/16	2-7/8	1/2x5/16	3-3/4	1-5/8	1-1/2	1	1/2	2	11/16	1-1/2
.6270 .7530	1-1/8	3-3/4	5/8x3/8	5	2-1/8	2	1-1/4	5/8	2-1/2	7/8	2
.9405 1.0030 1.1905 1.2530	1-3/8	4-1/2	3/4x1/2	6	2-3/4	2-1/2	1-1/2	3/4	3	1	2-1/2

Mounted Ball Bearings

PS Series Pressed Steel Housing

Pillow Blocks – Light Duty Setscrew Locking



Features —

Quality pressed steel outer housing.
Deep groove ball bearings for high radial and thrust loads.
Spherical outer race for full self-alignment.
Synthetic lip type seals.
Positive locking by setscrews through extended inner race.
Lubricated for life.
Housing halves snap together for ease of assembly.

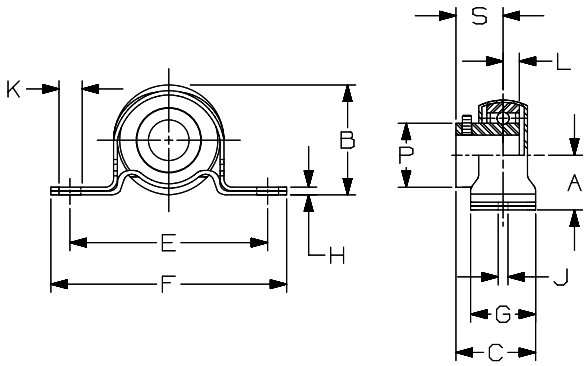

ORDER BY CATALOG NUMBER OR ITEM CODE

Bore	Catalog Number	Item Code
1/2	PS-1/2	64500
5/8	PS-5/8	64501
3/4	PS-3/4	64502
7/8	PS-7/8	64503
15/16	PS-15/16	64504
1	PS-1	64505
1-1/16	PS-1-1/16	64506
1-1/8	PS-1-1/2	64507
1-3/16	PS-1-3/16	64508
1-1/4S	PS-1-1/4S	64509

STANDARD TOLERANCES

DIMENSIONS		TOLERANCE
Bore	All	+.001 to –.000

ALL DIMENSIONS IN INCHES

Bore	A	B	C	E	F	G	H	J	K	L	P	R* Setscrew UNF	S	Bolt Size	Approx. Weight (Lbs.)
1/2 5/8	7/8	1-3/4	1.125	2-11/16	3-5/8	1	.133	.34	.54	15/64	31/32	10—32	5/8	5/16	.52 .48
3/4	1	2-1/16	1.203	3	4-1/8	1	.178	.40	.54	9/32	1-11/64	10—32	45/64	5/16	.58
7/8 15/16 1	1-1/8	2-7/32	1.328	3-3/8	4-1/2	1-1/8	.208	.40	.54	19/64	1-11/32	10—32	49/64	3/8	.67 .64 .61
1-1/16 1-1/8 1-3/16 1-1/4S	1-5/16	2-5/8	1.390	3-3/4	4-7/8	1-1/8	.238	.53	.75	5/16	1-39/64	1/4—28	53/64	3/8	1.10 1.05 1.00 .95

*2 at 120°
Eccentric Locking Collar bearings are available to special order.
For Load Ratings, See Engineering Section, Page 242.
Replacement Bearings are shown on Page 214.

XL Series Cast Ductile Housing

Pillow Blocks – Light Duty Setscrew Locking

Features —

One-piece housing (ductile casting).
Deep groove ball bearings for high radial and thrust loads.
Machined housing bore and spherical outer race for full self-alignment.
Synthetic lip type seal.
Positive locking by setscrews through extended inner race.

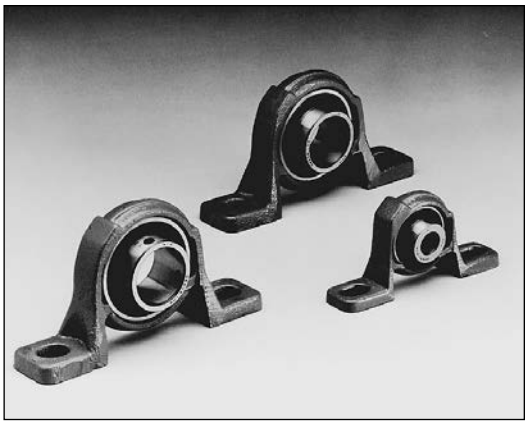

ORDER BY CATALOG NUMBER OR ITEM CODE

Bore	Catalog Number	Item Code
1/2	XL-1/2	64534
5/8	XL-5/8	64535
3/4	XL-3/4	64536
7/8	XL-7/8	64537
15/16	XL-15/16	64538
1	XL-1	64539
1-1/16	XL-1-1/16	64540
1-1/8	XL-1-1/8	64541
1-3/16	XL-1-3/16	64542
1-1/4S	XL-1-1/4S	64543
1-3/8	XL-1-3/8	64545
1-7/16	XL-1-7/16	64546

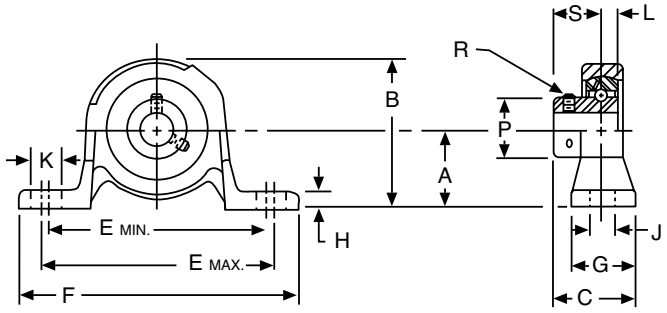

STANDARD TOLERANCES

DIMENSIONS	TOLERANCE	
Bore	All	±.001 - .000

ALL DIMENSIONS IN INCHES

Bore	A	B	C	E Min.	E Max.	F	G	H	J	K	L	P	R* Setscrew UNF	S	Bolt Size	Approx. Weight (Lbs.)
1/2 5/8	1-3/16	2-5/32	1-1/8	3-3/16	3-11/16	4-1/2	1	9/32	7/16	11/16	15/64	31/32	10—32	5/8	3/8	.6
3/4	1-5/16	2-7/16	1-15/64	3-5/8	3-7/8	4-3/4	1-1/16	5/16	7/16	9/16	9/32	1-11/64	10—32	45/64	3/8	.8
7/8 15/16 1	1-7/16	2-21/32	1-11/32	3-7/8	4-1/8	5	1-1/8	11/32	7/16	9/16	19/64	1-11/32	10—32	49/64	3/8	1.0
1-1/16 1-1/8 1-3/16 1-1/4S	1-11/16	3-5/32	1-31/64	4-1/2	4-3/4	6	1-5/16	3/8	9/16	11/16	5/16	1-39/64	1/4—28	53/64	1/2	1.4
1-3/8 1-7/16	1-7/8	3-9/16	1-11/16	4-3/4	5	6-3/8	1-3/8	13/32	9/16	11/16	11/32	1-27/32	1/4—28	1	1/2	1.9

*2 at 120°
These units also available with Eccentric Locking Collars on Special Order.
For Load Ratings, see Engineering Section, Page 237.
Replacement Bearings are shown on Page 214.

Mounted Ball Bearings

F

L/H Series

Pillow Blocks – Standard Duty; Eccentric Locking Collar

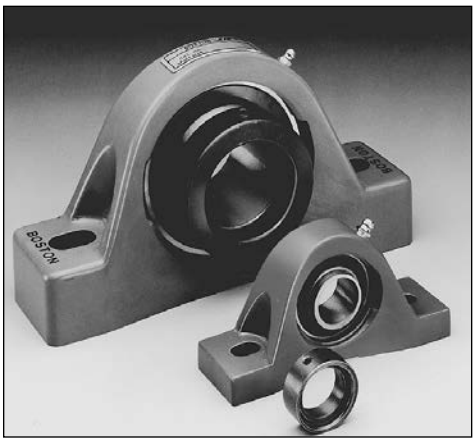

L Series Low Backing
H Series High Backing

Features —

Rigid one piece housing.
Chrome alloy steel balls.
Spherical outer race.
Synthetic lip type seals.
Eccentric locking collar.
1/4-28 threaded grease fitting.

ORDER BY CATALOG NUMBER OR ITEM CODE

Bore	Low Backing		High Backing	
	L Series		H Series	
	Catalog Number	Item Code	Catalog Number	Item Code
1/2 5/8	3L-1/2 3L-5/8	06906 06908	3H-1/2 3H-5/8	06902 06904
3/4	4L-3/4	06912	4H-3/4	06910
7/8 15/16 1	5L-7/8 5L-15/16 5L-1	06920 06922 06924	5H-7/8 5H-15/16 5H-1	06914 06916 06918
1-1/8 1-3/16 1-1/4S	6L-1-1/8 6L-1-3/16 6L-1-1/4S	06928 06930 06934	6H-1-1/8 6H-1-3/16 6H-1-1/4S	06932 06936 06926
1-1/4 1-5/16 1-3/8	7L-1-1/4* 7L-1-5/16* 7L-1-3/8*	06858 06860 06862	7H-1-1/4* 7H-1-5/16* 7H-1-3/8*	06850 06852 06854
1-1/2	8L-1-1/2*	06868	8H-1-1/2*	06866
1-5/8 1-11/16	9L-1-5/8* 9L-1-11/16*	06876 06878	9H-1-5/8* 9H-1-11/16*	06870 06872
1-15/16	10L-1-15/16*	06884	10H-1-15/16*	06882
2-1/4 2-7/16	12L-2-1/4* 12L-2-7/16*	06898 06900	12H-2-1/4* 12H-2-7/16*	06894 06896

*Bearings equipped with steel flinger.
Replacement Bearings are shown on Page 213.

L/H Series

Pillow Blocks – Standard Duty; Eccentric Locking Collar

SHAFT HEIGHT DIMENSIONS IN INCHES

Bore	Low Backing			High Backing		
	A	B	H	A	B	H
1/2 5/8	1-1/16	2-5/32	1/2	1-3/16	2-9/32	5/8
3/4	1-1/4	2-15/32	9/16	1-5/16	2-17/32	5/8
7/8 15/16 1	1-5/16	2-21/32	5/8	1-7/16	2-25/32	3/4
1-1/8 1-3/16 1-1/4S	1-9/16	3-1/8	3/4	1-11/16	3-1/4	7/8
1-1/4 1-5/16 1-3/8 1-7/16	1-13/16	3-11/16	1	1-7/8	3-3/4	1-1/16
1-1/2	1-15/16	4	1-1/8	2	4-1/16	1-3/16
1-5/8 1-11/16 1-3/4	2-1/16	4-1/4	1-1/4	2-1/8	4-5/16	1-5/16
1-15/16	2-3/16	4-1/2	1-3/8	2-1/4	4-9/16	1-7/16
2 2-3/16	2-7/16	4-15/16	1-1/2	2-1/2	5	1-9/16
2-1/4 2-7/16	2-11/16	5-7/16	1-5/8	2-3/4	5-1/2	1-11/16

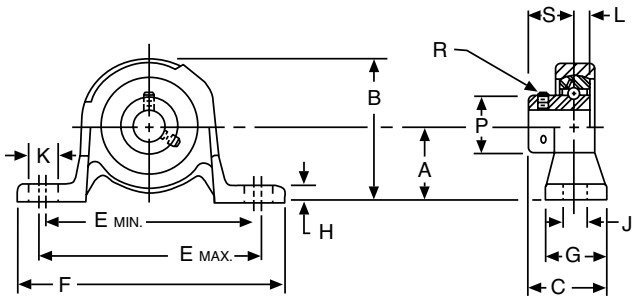

STANDARD TOLERANCES

DIMENSIONS		TOLERANCE
Bore	All	+.0012 to –.0000

ALL DIMENSIONS IN INCHES

Bore	C	E		F	G	J	K	L	P	R Setscrew UNF	S	Bolt Size	Approx. Wt. (Lbs.)	
		Min.	Max.										L	H
1/2 5/8	1-5/8	3-5/16	4	5-1/16	1-1/2	7/16	25/32	1/4	1-9/64	1/4-28	7/8	3/8	1.1	1.2
3/4	1-45/64	3-7/16	4-1/8	5-1/4	1-9/16	7/16	25/32	19/64	1-19/64	1/4-28	59/64	3/8	1.6	1.6
7/8 15/16 1	1-47/64	3-7/16	4-1/4	5-1/2	1-5/8	7/16	11/16	19/64	1-1/2	1/4-28	59/64	3/8	1.9	1.9
1-1/8 1-3/16 1-1/4S	1-59/64	4-5/16	4-15/16	6-1/4	1-3/4	9/16	7/8	23/64	1-3/4	5/16-24	1-3/64	1/2	2.6	2.7
1-1/4 1-5/16 1-3/8 1-7/16	2-13/64	4-3/4	5-3/8	6-11/16	1-7/8	9/16	7/8	47/64	2-3/16	3/8-24	1-17/64	1/2	4.1	4.3
1-1/2	2-3/8	5-1/4	5-13/16	7-1/4	2	9/16	27/32	27/32	2-23/64	3/8-24	1-3/8	1/2	5.5	5.6
1-5/8 1-11/16 1-3/4	2-7/16	5-9/16	6-1/8	7-3/4	2-1/8	9/16	27/32	27/32	2-1/2	3/8-24	1-3/8	1/2	6.5	6.6
1-15/16	2-5/8	6-1/16	6-5/8	8-1/4	2-1/4	11/16	31/32	31/32	2-3/4	3/8-24	1-1/2	5/8	8.0	8.1
2 2-3/16	2-29/32	6-7/16	7-3/8	8-7/8	2-3/8	11/16	1-5/32	1-3/32	3	7/16-20	1-23/32	5/8	9.5	10.0
2-1/4 2-7/16	3-3/32	6-15/16	7-7/8	9-5/8	2-1/2	11/16	1-5/32	1-7/32	3-5/16	7/16-20	1-27/32	5/8	11.8	11.9

For Load Ratings, see Engineering Section, Page 243.

Mounted Ball Bearings

SL/SH Series

Pillow Blocks – Standard Duty; Extended Inner Race – Setscrew Locking

F



SL Series Low Backing
SH Series High Backing

Features —

One-piece, high grade cast iron housing.
Deep groove ball bearings for high radial and thrust loads.
Precision machined housing bore and spherical outer race for self-alignment.
Synthetic lip type seals with steel flinger.
Positive locking by setscrews through extended inner race.
1/4-28 threaded grease fitting and channel through outer race allow relubrication.

ORDER BY CATALOG NUMBER OR ITEM CODE

Bore	Low Backing		High Backing	
	Catalog Number	Item Code	Catalog Number	Item Code
1/2	SL-1/2*	64680	SH-1/2*	64679
5/8	SL-5/8*	64682	SH-5/8*	64681
3/4	SL-3/4	64684	SH-3/4	64683
7/8	SL-7/8	64686	SH-7/8	64685
15/16	SL-15/16	64688	SH-15/16	65687
1	SL-1	64690	SH-1	64689
1-1/8	SL-1-1/8	64692	SH-1-1/8	64691
1-3/16	SL-1-3/16	64694	SH-1-3/16	64693
1-1/4S	SL-1-1/4S	64696	SH-1-1/4S	64695
1-1/4	SL-1-1/4	64698	SH-1-1/4	64697
1-5/16	SL-1-5/16	64700	SH-1-5/16	64699
1-3/8	SL-1-3/8	64702	SH-1-3/8	64701
1-7/16	SL-1-7/16	64704	SH-1-7/16	64703
1-1/2	SL-1-1/2	64706	SH-1-1/2	64705
1-5/8	SL-1-5/8	64708	SH-1-5/8	64707
1-11/16	SL-1-11/16	64710	SH-1-11/16	64709
1-3/4	SL-1-3/4	64712	SH-1-3/4	64711
1-15/16	SL-1-15/16	64714	SH-1-15/16	64713
2	SL-2	64716	SH-2	64715
2-3/16	SL-2-3/16	64718	SH-2-3/16	64717
2-1/4	SL-2-1/4	64720	SH-2-1/4	64719
2-7/16	SL-2-7/16	64722	SH-2-7/16	64721

*Bearings not equipped with steel flinger.
Replacement Bearings are shown on Page 214.

SL/SH Series

Pillow Blocks – Standard Duty; Extended Inner Race – Setscrew Locking

SHAFT HEIGHT DIMENSIONS IN INCHES

Bore	Low Backing			High Backing		
	A	B	H	A	B	H
1/2 5/8	1-1/16	2-5/32	1/2	1-3/16	2-9/32	5/8
3/4	1-1/4	2-15/32	9/16	1-5/16	2-17/32	5/8
7/8 15/16 1	1-5/16	2-21/32	5/8	1-7/16	2-25/32	3/4
1-1/8 1-3/16 1-1/4S	1-9/16	3-1/8	3/4	1-11/16	3-1/4	7/8
1-1/4 1-5/16 1-3/8 1-7/16	1-13/16	3-11/16	1	1-7/8	3-3/4	1-1/16
1-1/2	1-15/16	4	1-1/8	2	4-1/16	1-3/16
1-5/8 1-11/16 1-3/4	2-1/16	4-1/4	1-1/4	2-1/8	4-5/16	1-5/16
1-15/16	2-3/16	4-1/2	1-3/8	2-1/4	4-9/16	1-7/16
2 2-3/16	2-7/16	4-15/16	1-1/2	2-1/2	5	1-9/16
2-1/4 2-7/16	2-11/16	5-7/16	1-5/8	2-3/4	5-1/2	1-11/16

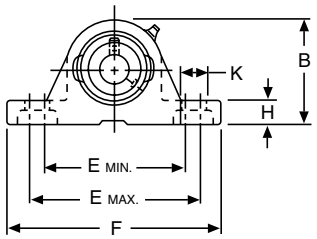

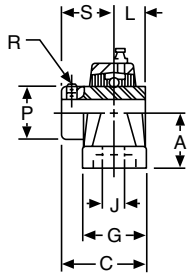

STANDARD TOLERANCES

DIMENSIONS		TOLERANCE
Bore	All	+.0012 to –.0000

ALL DIMENSIONS IN INCHES

Bore	C	E		F	G	J	K	L	P	R* Setscrew (UNF)	S	Bolt Size	Approx. Wt. (Lbs.)	
		Min.	Max.										L	H
1/2 5/8	1-3/8	3-5/16	4	5-1/16	1-1/2	7/16	25/32	9/32	31/32	10-32	5/8	3/8	1.25	1.38
3/4	1-1/2	3-7/16	4-1/8	5-1/4	1-9/16	7/16	25/32	1/2	1-11/64	10-32	23/32	3/8	1.75	1.75
7/8 15/16 1	1-37/64	3-3/4	4-1/4	5-1/2	1-5/8	7/16	11/16	9/16	1-21/64	10-32	25/32	3/8	2.00	2.00
1-1/8 1-3/16 1-1/4S	1-3/4	4-5/16	4-15/16	6-1/4	1-3/4	9/16	7/8	5/8	1-39/64	1/4-28	7/8	3/8	2.75	2.88
1-1/4 1-5/16 1-3/8 1-7/16	1-15/16	4-3/4	5-3/8	6-11/16	1-7/8	9/16	7/8	11/16	1-27/32	1/4-28	1	1/2	4.25	4.50
1-1/2	2-3/16	5-1/4	5-13/16	7-1/4	2	9/16	27/32	3/4	2-3/32	5/16-24	1-3/16	1/2	5.63	5.75
1-5/8 1-11/16 1-3/4	2-33/64	5-9/16	6-1/8	7-3/4	2-1/8	9/16	27/32	3/4	2-17/64	5/16-24	1-3/16	1/2	6.63	6.75
1-15/16	2-13/32	6-1/16	6-5/8	8-1/4	2-1/4	11/16	31/32	3/4	2-29/64	5/16-24	1-5/16	5/8	8.25	8.25
2 2-3/16	2-1/2	6-7/16	7-3/8	8-7/8	2-3/8	11/16	1-5/32	7/8	2-23/32	5/16-24	1-5/16	5/8	10.00	10.25
2-1/4 2-7/16	2-13/16	6-15/16	7-7/8	9-5/8	2-1/2	11/16	1-5/32	1	3-1/32	3/8-24	1-9/16	5/8	12.25	12.38

*2 at 120°

For Load Ratings, see Engineering Section, Page 243.

Mounted Ball Bearings

MB Series

Pillow Blocks – Medium Duty; Extended Inner Race – Setscrew Locking

F



Features —

One-piece high grade cast iron housing.
Deep groove ball bearings for high radial and thrust loads.
Precision machined housing bore and spherical race for full self-alignment.
Synthetic lip type seal with steel flinger.
Positive locking by setscrews through extended inner race.
1/4-28 threaded grease fitting and channel through outer race allow relubrication.

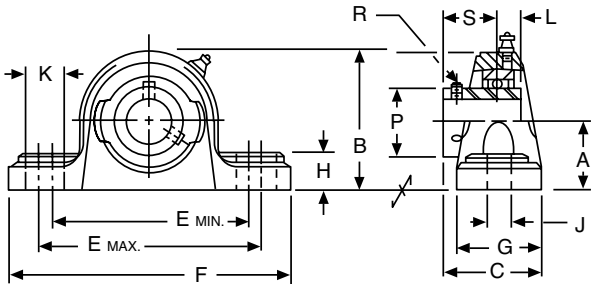

ORDER BY CATALOG NUMBER OR ITEM CODE

Bore	Catalog Number	Item Code
1-7/16	MB-1-7/16	64573
1-1/2	MB-1-1/2	64574
1-11/16 1-3/4	MB-1-11/16 MB-1-3/4	64575 64576
1-15/16 2	MB-1-15/16 MB-2	64577 64578
2-3/16 2-1/4	MB-2-3/16 MB-2-1/4	64579 64580
2-7/16 2-1/2	MB-2-7/16 MB-2-1/2	64581 64582
2-11/16	MB-2-11/16	64583
2-15/16 3	MB-2-15/16 MB-3	64584 64585
3-3/16 3-1/4	MB-3-3/16 MB-3-1/4	64586 64587
3-7/16 3-1/2	MB-3-7/16 MB-3-1/2	64588 64589

STANDARD TOLERANCES

DIMENSIONS		TOLERANCE
Bore	All	+.001 to –.000

ALL DIMENSIONS IN INCHES

Bore	A	B	C	E Min.	E Max.	F	G	H	J	K	L	P	R* Setscrew (UNF)	S	Bolt Size	Approx. Weight (Lbs.)
1-7/16	2-1/8	4-3/16	2-17/64	5-1/16	6-5/16	6-1/2	2-1/4	3/4	9/16	1-3/16	3/4	1-27/32	5/16-24	1-9/64	1/2	6.8
1-1/2	2-5/16	4-9/16	2-1/2	5-9/16	6-11/16	8-1/4	2-5/8	13/16	11/16	1-1/4	3/4	2-3/32	5/16-24	1-3/16	5/8	9.0
1-11/16 1-3/4	2-5/16	4-5/8	2-19/32	5-1/2	6-3/4	8-1/4	2-5/8	13/16	11/16	1-5/16	3/4	2-17/64	5/16-24	1-9/32	5/8	9.5
1-15/16 2	2-1/2	5-1/16	2-3/4	6	7-1/2	8-7/8	2-7/8	7/8	11/16	1-7/16	7/8	2-23/32	5/16-24	1-5/16	5/8	11.7
2-3/16 2-1/4	2-3/4	5-5/8	3-1/8	6-5/8	7-7/8	9-5/8	3-1/8	1-1/16	13/16	1-7/16	1	3-1/32	3/8-24	1-9/16	3/4	16.2
2-7/16 2-1/2	3	6-3/16	3-3/8	7-3/16	8-13/16	10-3/8	3-1/4	1-1/16	13/16	1-5/8	1-3/16	3-27/64	3/8-24	1-3/4	3/4	21.5
2-11/16	3-1/2	6-15/16	3-3/8	7-15/16	10-1/16	11-7/8	3-1/2	1-1/8	15/16	2	1-5/16	3-43/64	3/8-24	1-3/4	7/8	29.2
2-15/16 3	3-1/2	7-1/8	3-11/16	7-15/16	10-1/16	11-7/8	3-1/2	1-1/4	15/16	2	1-5/16	3-7/8	1/2-20	1-15/16	7/8	31.5
3-3/16 3-1/4	4	8	4-1/32	9-3/4	12-1/2	15	4	1-1/4	15/16	2-5/16	1-11/32	4-3/16	1/2-20	2-1/32	7/8	41.1
3-7/16 3-1/2	4	8-1/4	4-13/32	9-11/16	12-9/16	15	4-3/8	1-5/16	15/16	2-3/8	1-9/16	4-25/64	1/2-20	2-7/32	7/8	47.8

*2 at 120°

For Load Ratings, See Engineering Section, Page 243.
Replacement Bearings are shown on Page 214.

PS2/PS3 Series Pressed Steel Housing

Flanged Units – Light Duty; Setscrew Locking

ORDER BY CATALOG NUMBER OR ITEM CODE

Bore	3-BOLT		2-BOLT	
	Catalog Number	Item Code	Catalog Number	Item Code
1/2 5/8	PS3-1/2 PS3-5/8	64520 64521	PS2-1/2 PS2-5/8	64510 64511
3/4	PS3-3/4	64522	PS2-3/4	64512
7/8 15/16 1	PS3-7/8 PS3-15/16 PS3-1	64523 64524 64525	PS2-7/8 PS2-15/16 PS2-1	64513 64514 64515
1-1/16 1-1/8 1-3/16 1-1/4S	PS3-1-1/16 PS3-1-1/8 PS3-1-3/16 PS3-1-1/4S	64526 64527 64528 64529	PS2-1-1/16 PS2-1-1/8 PS2-1-3/16 PS2-1-1/4S	64516 64517 64518 64519
1-1/4 1-3/8 1-7/16	PS3-1-1/4 PS3-1-3/8 PS3-1-7/16	64530 64532 64533	-----	-----



STANDARD TOLERANCES

DIMENSIONS		TOLERANCE
Bore	All	+.001 to –.0000

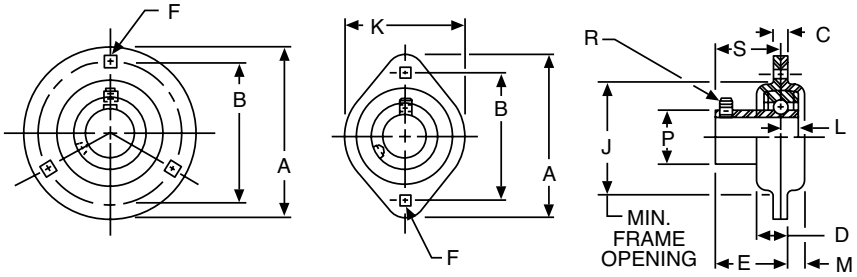

ALL DIMENSIONS IN INCHES

Bore	A	B	C	D	E	F Sq.	J	K	L	M	P	R* Setscrew UNF	S	Bolt Size	Approx. Weight (Lbs.)	
															PS3	PS2
1/2 5/8	3-3/16	2-1/2	.150	23/64	45/64	9/32	1-15/16	2-5/16	15/64	13/64	31/32	10-32	5/8	1/4	.63 .59	.51 .47
3/4	3-9/16	2-13/16	.166	25/64	25/32	11/32	2-3/16	2-5/8	9/32	7/32	1-11/64	10-32	45/64	5/16	.74	.60
7/8 15/16 1	3-3/4	3	.166	27/64	27/32	11/32	2-3/8	2-51/64	19/64	1/4	1-11/32	10-32	49/64	5/16	.87 .84 .81	.70 .67 .64
1-1/16 1-1/8 1-3/16 1-1/4S	4-7/16	3-9/16	.208	29/64	15/16	13/32	2-13/16	3-5/16	5/16	1/4	1-39/64	1/4-28	53/64	3/8	1.42 1.37 1.32 1.27	1.08 1.03 .98 .93
1-1/4 1-3/8 1-7/16	4-13/16	3-15/16	.208	31/64	1-7/64	13/32	3-3/16	—	11/32	9/32	1-27/32	1/4-28	1	3/8	1.93 1.84 1.74	—

*2 at 120°
Eccentric Locking Collar bearings are available to special order.
On 1-1/4" through 1-7/16" Hole Diameters, Eccentric Collar bearings will have extended inner races on both sides and will project beyond "M" dimension.
For Load Ratings, see Engineering Section, Page 242.
Replacement Bearings are shown on Page 214.

Mounted Ball Bearings

XL2/XL3 Series Cast Ductile Housing

Flanged Units – Light Duty; Setscrew Locking



ORDER BY CATALOG NUMBER OR ITEM CODE

Bore	3-BOLT		2-BOLT	
	Catalog Number	Item Code	Catalog Number	Item Code
1/2	XL3-1/2	64560	XL2-1/2	64547
5/8	XL3-5/8	64561	XL2-5/8	64548
3/4	XL3-3/4	64562	XL2-3/4	64549
7/8	XL3-7/8	64563	XL2-7/8	64550
15/16	XL3-15/16	64564	XL2-15/16	64551
1	XL3-1	64565	XL2-1	64552
1-1/16	XL3-1-1/16	64566	XL2-1-1/16	64553
1-1/8	XL3-1-1/8	64567	XL2-1-1/8	64554
1-3/16	XL3-1-3/16	64568	XL2-1-3/16	64555
1-1/4S	XL3-1-1/4S	64569	XL2-1-1/4S	64556
1-3/8	XL3-1-3/8	64571	XL2-1-3/8	64558
1-7/16	XL3-1-7/16	64572	XL2-1-7/16	64559

STANDARD TOLERANCES

DIMENSIONS		TOLERANCE
Bore	All	+.001 to –.000

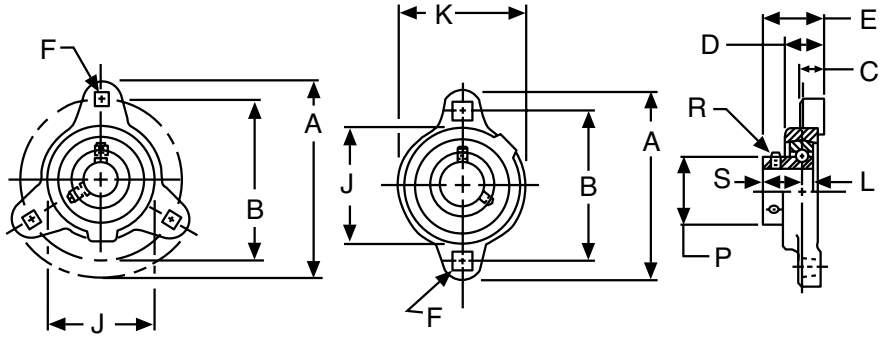

ALL DIMENSIONS IN INCHES

Bore	A	B	C	D	E	F Sq.	J	K	L	P	R* Setscrew UNF	S	Bolt Size	Approx. Weight (Lbs.)	
														XL3	XL2
1/2 5/8	3-3/16	2-1/2	27/64	11/16	1	9/32	1-13/16	1-15/16	15/64	31/32	10-32	5/8	1/4	.6	.5
3/4	3-9/16	2-13/16	7/16	3/4	1-1/8	11/32	2-1/16	2-1/4	9/32	1-11/64	10-32	45/64	3/16	.7	.7
7/8 15/16 1	3-3/4	3	7/16	3/4	1-1/8	11/32	2-5/16	2-1/2	19/64	1-11/32	10-32	49/64	5/16	.8	.8
1-1/16 1-1/8 1-3/16 1-1/4S	4-7/16	3-9/16	15/32	27/32	1-19/64	13/32	2-13/16	2-15/16	5/16	1-39/64	1/4-28	53/64	3/8	1.2	1.2
1-3/8 1-7/16	4-13/16	3-15/16	1/2	29/32	1-1/2	13/32	3-3/16	3-3/8	11/32	1-27/32	1/4-28	1	3/8	1.6	1.5

*2 at 120°
These units also available with Eccentric Locking Collars on Special Order.
For Load Ratings, See Engineering Section, Page 243.
Replacement Bearings are shown on Page 214.

F/T Series

Flanged Units – Standard Duty; Eccentric Locking Collar

F Series 4-Bolt
T Series 2-Bolt



Features —

Rigid one-piece high housing.
Chrome alloy steel balls. Spherical outer race.
Synthetic lip type seals.
Eccentric locking collar.
1/4-28 threaded grease fitting.

ORDER BY CATALOG NUMBER OR ITEM CODE

Bore	4-BOLT FLANGES F SERIES		2-BOLT FLANGES T SERIES	
	Catalog Number	Item Code	Catalog Number	Item Code
1/2 5/8	3F-1/2 3F-5/8	06938 06940	3T-1/2 3T-5/8	06982 06984
3/4	4F-3/4	06942	4T-3/4	06986
7/8 15/16 1	5F-7/8 5F-15/16 5F-1	06944 06946 06948	5T-7/8 5T-15/16 5T-1	06988 06990 06992
1-1/8 1-3/16 1-1/4S	6F-1-1/8 6F-1-3/16 6F-1-1/4S	06950 06952 06954	6T-1-1/8 6T-1-3/16 6T-1-1/4S	06994 06996 06998
1-1/4 1-5/16 1-3/8 1-7/16	7F-1-1/4* 7F-1-5/16* 7F-1-3/8* 7F-1-7/16*	06956 06958 06960 06962	7T-1-1/4* 7T-1-5/16* 7T-1-3/8* 7T-1-7/16*	07000 07002 07004 07006
1-1/2	8F-1-1/2*	06964	—	—
1-5/8 1-11/16 1-3/4	9F-1-5/8* 9F-1-11/16* 9F-1-3/4*	06966 06968 06970	— — —	— — —
1-15/16	10F-1-15/16*	06972	10T-1-15/16*	50695
2 2-3/16	11F-2* 11F-2-3/16*	06974 06976	— —	— —
2-1/4 2-7/16	12F-2-1/4* 12F-2-7/16*	06978 06980	— —	— —

*Bearings equipped with steel flinger.

Replacement Bearings are shown on Page 213.

Mounted Ball Bearings

F/T Series

Flanged Units – Standard Duty; Eccentric Locking Collar

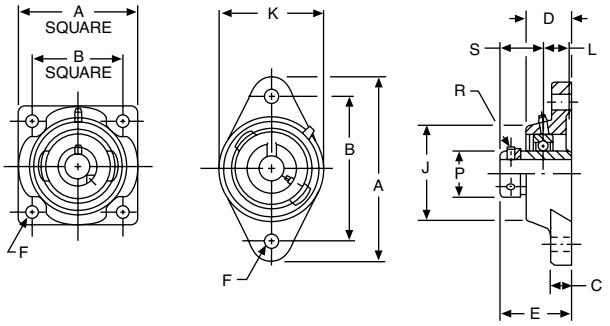

ENVELOPE AND BOLT SPACING DIMENSIONS IN INCHES

Bore	4-BOLT		2-BOLT		
	A	B	A	B	K
1/2 5/8	2-7/8	2-1/8	3-3/4	3	2-9/32
3/4	3-3/8	2-1/2	4-13/32	3-17/32	2-37/64
7/8 15/16 1	3-3/4	2-3/4	4-57/64	3-57/64	2-53/64
1-1/8 1-3/16 1-1/4S	4-1/4	3-1/4	5-19/32	4-19/32	3-19/64
1-1/4 1-5/16 1-3/8 1-7/16	4-5/8	3-5/8	6-1/8	5-1/8	3-11/64
1-1/2	5-1/8	4	—	—	—
1-5/8 1-11/16 1-3/4	5-3/8	4-1/8	—	—	—
1-15/16	5-5/8	4-3/8	7-7/16	6-3/16	4-9/16
2 2-3/16	6-3/8	5-1/8	—	—	—
2-1/4 2-7/16	6-7/8	5-5/8	—	—	—

STANDARD TOLERANCES

DIMENSIONS		TOLERANCE
Bore	All	+.0012 to –.0000

ALL DIMENSIONS IN INCHES

Bore	C	D	E	F Bolt	J	L	P F T	R* Setscrew UNF	S	Approx. Weight (Lbs.)	
										F	T
1/2 5/8	7/16	1-1/16	1-37/64	3/8	2	1/4	1-9/64	1/4-28	7/8	.9	.9
3/4	1/2	1-7/32	1-13/16	3/8	2-1/4	19/64	1-19/64	1/4-28	59/64	1.7	1.2
7/8 15/16 1	9/16	1-1/4	1-27/32	7/16	2-1/2	19/64	1-1/2	1/4-28	59/64	2.0	1.6
1-1/8 1-3/16 1-1/4S	9/16	1-11/32	2	7/16	2-15/16	23/64	1-3/4	5/16-24	1-3/64	2.7	2.1
1-1/4 1-5/16 1-3/8 1-7/16	5/8	1-3/8	2-1/8	1/2	3-1/4	47/64	2-3/16	3/8-24	1-17/64	3.7	2.8
1-1/2	11/16	1-37/64	2-11/32	1/2	3-3/4	27/32	2-23/64	3/8-24	1-3/8	5.0	—
1-5/8 1-11/16 1-3/4	11/16	1-39/64	2-11/32	9/16	3-7/8	27/32	2-1/2	3/8-24	1-3/8	5.4	—
1-15/16	11/16	1-51/64	2-19/32	9/16	4-1/8	31/32	2-3/4	3/8-24	1-1/2	6.0	4.8
2 2-3/16	3/4	1-31/32	2-15/16	5/8	4-1/2	1-3/32	3	7/16-20	1-23/32	8.4	—
2-1/4 2-7/16	3/4	2-1/8	3-3/16	5/8	4-7/8	1-7/32	3-5/16	7/16-20	1-27/32	10.0	—

*2 at 120°.

For Load Ratings, See Engineering Section, Page 243.

SF/ST Series

Flanged Units – Standard Duty; Extended Inner Race – Setscrew Locking

SF Series 4-Bolt
ST Series 2-Bolt



Features —

One-piece high grade cast iron housing.
Deep groove ball bearings for high radial and thrust loads.
Precision machined housing bore and spherical outer race for self-alignment.
Synthetic lip type seal with steel flinger.
Positive locking by setscrews through extended inner race.
1/4-28 threaded grease fitting and channel through outer race allow relubrication.

ORDER BY CATALOG NUMBER OR ITEM CODE

Bore	4-BOLT		2-BOLT	
	Catalog Number	Item Code	Catalog Number	Item Code
1/2	SF-1/2	64736	ST-1/2	64723
5/8	SF-5/8	64737	ST-5/8	64724
3/4	SF-3/4	64738	ST-3/4	64725
7/8	SF-7/8	64739	ST-7/8	64726
15/16	SF-15/16	64740	ST-15/16	64727
1	SF-1	64741	ST-1	64728
1-1/8	SF-1-1/8	64742	ST-1-1/8	64729
1-3/16	SF-1-3/16	64743	ST-1-3/16	64730
1-1/4S	SF-1-1/4S	64744	ST-1-1/4S	64731
1-1/4	SF-1-1/4	64745	ST-1-1/4	64732
1-3/8	SF-1-3/8	64747	ST-1-3/8	64734
1-7/16	SF-1-7/16	64748	ST-1-7/16	64735
1-1/2	SF-1-1/2	64749	—	—
1-5/8	SF-1-5/8	64750	—	—
1-11/16	SF-1-11/16	64751	—	—
1-3/4	SF-1-3/4	64752	—	—
1-15/16	SF-1-15/16	64753	ST-1-15/16	50696
2	SF-2	64754	—	—
2-3/16	SF-2-3/16	64755	—	—
2-1/4	SF-2-1/4	64756	—	—
2-7/16	SF-2-7/16	64757	—	—

Replacement Bearings are shown on Page 214.

Mounted Ball Bearings

SF/ST Series

Flanged Units – Standard Duty; Extended Inner Race – Setscrew Locking

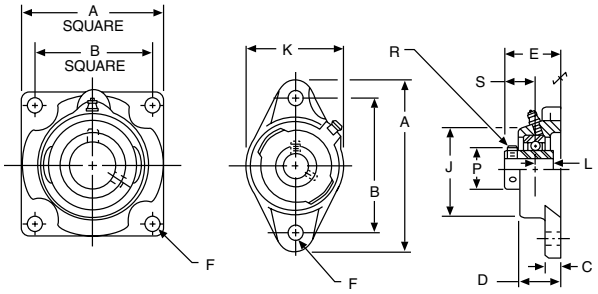

ENVELOPE AND BOLT SPACING DIMENSIONS IN INCHES

Bore	4-BOLT		2-BOLT		
	A	B	A	B	K
1/2 5/8	2-7/8	2-1/8	3-3/4	3	2-9/32
3/4	3-3/8	2-1/2	4-13/32	3-17/32	2-37/64
7/8 15/16 1	3-3/4	2-3/4	4-57/64	3-57/64	2-53/64
1-1/8 1-3/16 1-1/4S	4-1/4	3-1/4	5-19/32	4-19/32	3-19/64
1-1/4 1-5/16 1-3/8 1-7/16	4-5/8	3-5/8	6-1/8	5-1/8	3-11/64
1-1/2	5-1/8	4	—	—	—
1-5/8 1-11/16 1-3/4	5-3/8	4-1/8	—	—	—
1-15/16	5-5/8	4-3/8	7-7/16	6-3/16	4-9/16
2 2-3/16	6-3/8	5-1/8	—	—	—
2-1/4 2-7/16	6-7/8	5-5/8	—	—	—

STANDARD TOLERANCES

DIMENSIONS		TOLERANCE
Bore	All	+.0012 to –.0000

ALL DIMENSIONS IN INCHES

Bore	C	D	E	F Bolt	J	L	P	R* Setscrew UNF	S	Approx. Weight (Lbs.)	
										SF	ST
1/2 5/8	7/16	1-1/16	1-17/64	3/8	2	9/32	31/32	10-32	5/8	.9	.9
3/4	1/2	1-7/32	1-31/64	3/8	2-1/4	1/2	1-11/64	10-32	23/32	1.7	1.2
7/8 15/16 1	9/16	1-1/4	1-9/16	7/16	2-1/2	9/16	1-11/32	10-32	25/32	2.0	1.6
1-1/8 1-3/16 1-1/4S	9/16	1-11/32	1-11/16	7/16	2-15/16	5/8	1-39/64	1/4-28	7/8	2.7	2.1
1-1/4 1-5/16 1-3/8 1-7/16	5/8	1-3/8	1-27/32	1/2	3-5/16	11/16	1-27/32	1/4-28	1	3.7	2.8
1-1/2	11/16	1-37/64	2-1/64	1/2	3-3/4	3/4	2-3/32	5/16-24	1-3/16	5.0	—
1-5/8 1-11/16 1-3/4	11/16	1-39/64	2-1/64	9/16	3-7/8	3/4	2-17/64	5/16-24	1-3/16	5.4	—
1-15/16	11/16	1-51/64	2-3/8	9/16	4-1/8	3/4	2-29/64	5/16-24	1-9/32	6.0	4.8
2 2-3/16	3/4	1-31/32	2-17/32	5/8	4-1/2	7/8	2-23/32	5/16-24	1-5/16	8.4	—
2-1/4 2-7/16	3/4	2-1/8	2-29/32	5/8	4-7/8	1	3-1/32	3/8-24	1-9/16	10.0	—

*2 AT 120°

For Load Ratings, See Engineering Section, Page 243.

MBF Series

Flanged Units – Medium Duty; Extended Inner Race – Setscrew Locking

Features —

One-piece high grade cast iron housing.
Deep groove ball bearings for high radial and thrust loads.
Precision machined housing bore and spherical outer race for full self-alignment.
Synthetic lip type seal with steel flinger.
Positive locking by setscrews through extended inner race.
1/4-28 threaded grease fitting and channel through outer race allow relubrication.

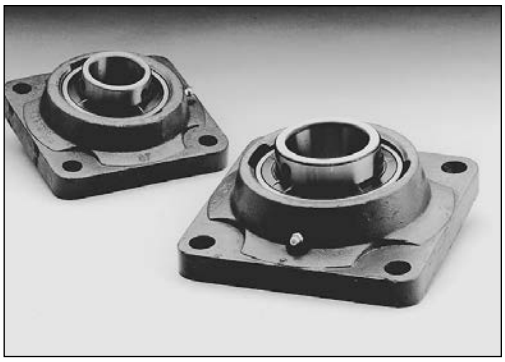

ORDER BY CATALOG NUMBER OR ITEM CODE

Bore	Catalog Number	Item Code
1-7/16	MBF-1-7/16	64590
1-1/2	MBF-1-1/2	64591
1-11/16 1-3/4	MBF-1-11/16 MBF-1-3/4	64592 64593
1-15/16 2	MBF-1-15/16 MBF-2	64594 64595
2-3/16 2-1/4	MBF-2-3/16 MBF-2-1/4	64596 64597
2-7/16 2-1/2	MBF-2-7/16 MBF-2-1/2	64598 64599
2-11/16	MBF-2-11/16	64600
2-15/16 3	MBF-2-15/16 MBF-3	64601 64602
3-3/16 3-1/4	MBF-3-3/16 MBF-3-1/4	64603 64604
3-7/16 3-1/2	MBF-3-7/16 MBF-3-1/2	64605 64606

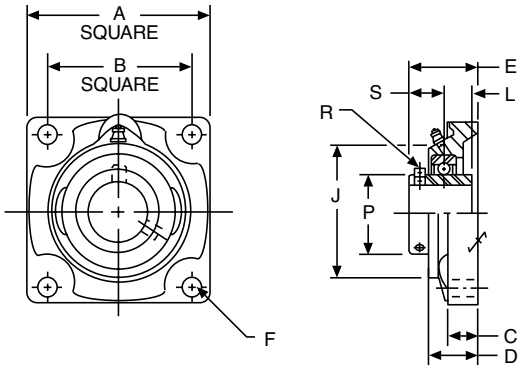

STANDARD TOLERANCES

DIMENSIONS		TOLERANCE
Bore	1-7/16-1-3/4 1-15/16-3-1/2	+.0010 to –.0000 +.0012 to –.0000

ALL DIMENSIONS IN INCHES

Bore	A	B	C	D	E	F Bolt	J	L	P	R* Setscrew UNF	S	Approx. Weight (Lbs.)
1-7/16	5-1/8	4	11/16	1-37/64	2-5/32	1/2	3-3/4	3/4	1-27/32	5/16-24	1-9/64	5.5
1-1/2	5-3/8	4-1/8	11/16	1-39/64	2-5/32	9/16	3-7/8	3/4	2-3/32	5/16-24	1-3/16	6.0
1-11/16 1-3/4	5-5/8	4-3/8	11/16	1-51/64	2-3/8	9/16	4-1/8	3/4	2-17/64	5/16-24	1-9/32	6.8
1-15/16 2	6-3/8	5-1/8	3/4	1-31/32	2-17/32	5/8	4-1/2	7/8	2-23/32	5/16-24	1-5/16	10.5
2-3/16 2-1/4	6-7/8	5-5/8	3/4	2-1/8	2-29/32	5/8	4-7/8	1	3-1/32	3/8-24	1-9/16	12.1
2-7/16 2-1/2	7-1/8	5-7/8	3/4	2-5/32	3-1/16	5/8	5-3/4	1-3/16	3-27/64	3/8-24	1-3/4	16.4
2-11/16	7-5/8	6	3/4	2-5/16	3-3/16	3/4	5-3/4	1-5/16	3-43/64	3/8-24	1-3/4	20.6
2-15/16 3	7-5/8	6	13/16	2-7/16	3-1/2	3/4	6-1/4	1-5/16	3-7/8	1/2-20	1-15/16	21.4
3-3/16 3-1/4	8-3/8	6-3/4	15/16	2-13/32	3-17/32	3/4	6-7/8	1-11/32	4-3/16	1/2-20	2-1/32	26.7
3-7/16 3-1/2	8-3/8	6-3/4	15/16	2-11/16	3-31/32	3/4	7	1-9/16	4-25/64	1/2-20	2-7/32	20.0

*2 AT 120°
For Load Ratings, See Engineering Section, Page 243.
Replacement Bearings are shown on Page 214.

Mounted Ball Bearings

MBP Series

Piloted Flanged Units – Medium Duty; Extended Inner Race – Setscrew Locking

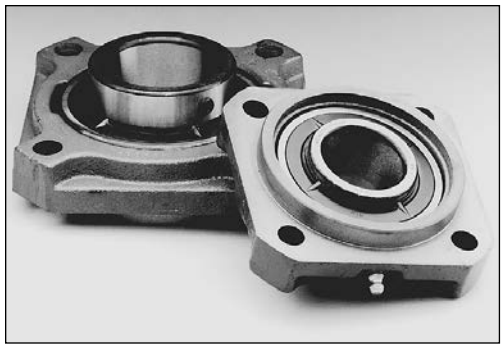

Features —

One-piece high grade cast iron housing.
Deep groove ball bearings for high radial and thrust loads.
Precision machined housing bore and spherical outer race for full self-alignment.
Synthetic lip type seal with steel flinger.
Positive locking by setscrews through extended inner race.
1/4-28 threaded grease fitting and channel through outer race allow relubrication.

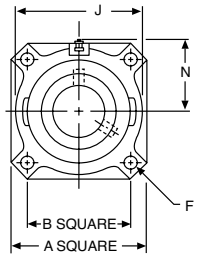

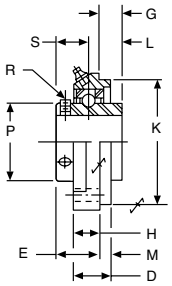

ORDER BY CATALOG NUMBER OR ITEM CODE

Bore	Catalog Number	Item Code
1-7/16	MBP-1-7/16	64607
1-1/2	MBP-1-1/2	64608
1-11/16 1-3/4	MBP-1-11/16 MBP-1-3/4	64609 64610
1-15/16 2	MBP-1-15/16 MBP-2	64611 64612
2-3/16 2-1/4	MBP-2-3/16 MBP-2-1/4	64613 64614
2-7/16 2-1/2	MBP-2-7/16 MBP-2-1/2	64615 64616
2-11/16	MBP-2-11/16	64617
2-15/16 3	MBP-2-15/16 MBP-3	64618 64619
3-7/16 3-1/2	MBP-3-7/16 MBP-3-1/2	64620 64621

STANDARD TOLERANCES

DIMENSIONS		TOLERANCE
Bore	1-7/16-1-3/4 1-15/16-3-1/2	+.0010 to –.0000 +.0012 to –.0000
K	All	+.000 to –.002

ALL DIMENSIONS IN INCHES

Bore	A	B	D	E	F Bolt	G	H	J	K	L	M	N	P	R* Setscrew UNF	S	Approx. Weight (Lbs.)
1-7/16	4-1/4	3-3/32	1-5/16	1-17/32	7/16	13/32	7/8	4	3-5/8	3/4	7/16	2-1/4	1-27/32	5/16-24	1-9/64	5.5
1-1/2	4-1/4	3-3/32	1-11/32	1-9/16	7/16	3/8	29/32	4	3-5/8	3/4	7/16	2-9/32	2-3/32	5/16-24	1-3/16	6.0
1-11/16 1-3/4	4-15/16	3-5/8	1-3/8	1-11/16	1/2	11/32	15/16	4-1/2	4-1/4	3/4	7/16	2-9/16	2-17/64	5/16-24	1-9/32	6.8
1-15/16 2	5-3/16	3-13/16	1-3/8	1-21/32	1/2	17/32	15/16	4-3/4	4-1/2	7/8	7/16	2-3/4	2-23/32	5/16-24	1-5/16	10.5
2-3/16 2-1/4	5-13/16	4-1/4	1-15/32	1-7/8	1/2	11/16	31/32	5-3/8	5	1	1/2	3-1/16	3-1/32	3/8-24	1-9/16	12.1
2-7/16 2-1/2	6-1/4	4-19/32	1-5/8	2-1/8	1/2	13/16	1-1/8	5-3/4	5-1/2	1-3/16	1/2	3-9/32	3-27/64	3/8-24	1-3/4	16.4
2-11/16	7-1/8	5-5/16	1-21/32	2-5/32	5/8	29/32	1-5/32	6-9/16	6-3/8	1-5/16	1/2	3-11/32	3-43/64	3/8-24	1-3/4	20.6
2-15/16 3	7-1/8	5-5/16	1-7/8	2-3/8	5/8	7/8	1-1/4	6-9/16	6-3/8	1-5/6	5/8	3-23/32	3-7/8	1/2-20	1-15/16	21.4
3-7/16 3-1/2	8-3/8	6-3/32	1-31/32	2-21/32	3/4	1-1/8	1-11/32	7-3/4	7-3/8	1-9/16	5/8	4-5/16	4-25/64	1/2-20	2-7/32	30.0

*2 AT 120°
For Load Ratings, See Engineering Section, Page 243.
Replacement Bearings are shown on Page 214.

A Series

Adjustable Shaft Supports – Standard Duty; Eccentric Locking Collar

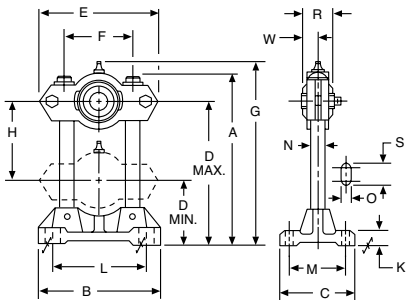

Features —

Rigid one piece housing.
Chrome alloy steel balls.
Spherical outer race.
Synthetic lip type seals.
Eccentric locking collar.
1/4-28 threaded grease fitting.



ORDER BY CATALOG NUMBER OR ITEM CODE

Bore	Catalog Number	Item Code
1/2 5/8	3A-1/2 3A-5/8	07008 07010
3/4	4A-3/4	07012
7/8 15/16 1	5A-7/8 5A-15/16 5A-1	07016 07018 07020
1-1/8 1-3/16 1-1/4S	6A-1-1/8 6A-1-3/16 6A-1-1/4S	07024 07026 07028

STANDARD TOLERANCES

DIMENSIONS		TOLERANCE
Bore	All	+.001 to –.0000

ALL DIMENSIONS IN INCHES

Bore	A	B	C	D		E	F	G	H	
				Min.	Max.			Max.	Min.	Max.
1/2 5/8	7-1/8	5-1/8	3-1/8	2-13/32	6-1/16	4-7/8	2-3/4	7-7/16	2-1/2	3-21/32
3/4	7-1/8	5-1/8	3-1/8	2-17/32	6-1/16	4-7/8	2-3/4	7-9/16	2-13/16	3-17.32’
7/8 15/16 1	8-1/4	6-1/4	3-3/4	2-25/32	7-1/16	5-11/16	3-1/8	8-11/16	3	4-9/32
1-1/8 1-3/16 1-1/4S	11-1/4	8-1/8	4-1/2	3-1/2	9-15/16	7-11/16	4-3/8	11-25/32	3-7/16	6-7/16

Bore	K	L	M	N	O	R	S	W	Bolt Size
1/2 5/8	5/8	3-15/16	2-1/4	5/8	3/8	1-9/16	11/16	15/16	5/16
3/4	5/8	3-15/16	2-1/4	5/8	3/8	1-23/32	11/16	1-3/64	5/16
7/8 15/16 1	3/4	4-13/16	2-3/4	3/4	1/2	1-3/4	15/16	1-1/16	7/16
1-1/8 1-3/16 1-1/4S	1	6-3/8	3-1/4	1-1/4	5/8	2-5/16	1-1/8	1-3/16	9/16

NOTE: For applications where direction of radial bearing load is away from base, it is recommended that a hole be drilled near the end of each post and a suitable size pin inserted, as a safety precaution.

Replacement Bearings are shown on Page 213.

Mounted Bearings

TU Series

Take-Up Frames

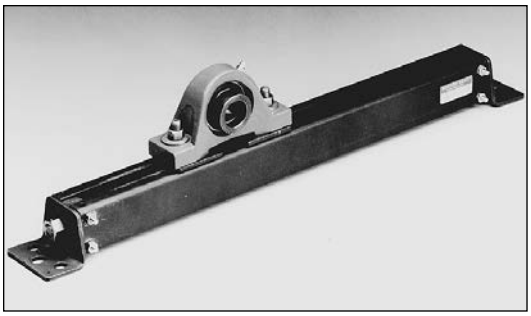

Boston Gear Take-up Frames are designed for use with Boston's Standard Duty Pillow Blocks. Pillow Block units are not included.

Features —

Bolted steel frame
3 or 4 bolt frame mounting
Bolt hole centers adjustable

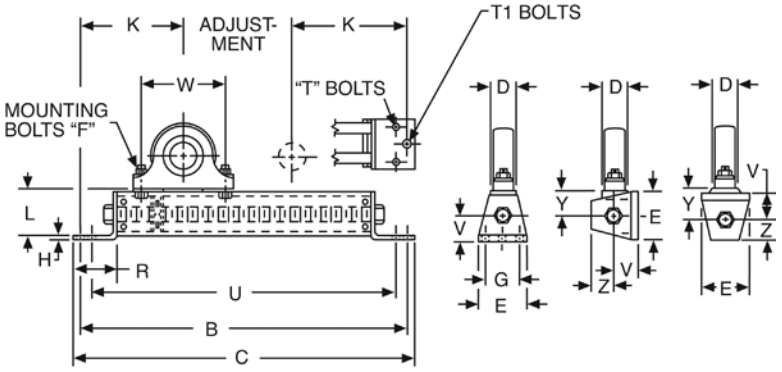

ALL DIMENSIONS IN INCHES

Pillow Block Bore	Adjust-ment	B	C	D	E	F Bolts	G	H	K	L	R
1/2-1	6 9 12	16 19 22	17 20 23	1-3/4	2-5/8	3/8	1-5/8	3/16	5	2-1/8	1-3/4
1-1/8-1-3/4	6 9 12 18	19-1/8 22-1/8 25-1/8 31-1/8	20-1/4 23-1/4 26-1/4 32-1/4	2-3/8	3-1/8	1/2	2-1/8	1/4	6-9/16	2-11/16	2-3/16
1-15/16-2-7/16	9 12 18 24	25-5/16 28-5/16 34-5/16 40-5/16	26-9/16 29-9/16 35-9/16 41-9/16	3	4	5/8	2-3/4	5/16	8-5/32	3-5/16	2-3/4

ORDER BY CATALOG NUMBER OR ITEM CODE

Pillow Block Bore	Adjust-ment	Bolts		U	V	W		Y	Z	Catalog Number	Item Code
		T	T1			Min.	Max.				
1/2-1	6 9 12	5/16	3/8	15-1/4 18-1/4 21-1/4	1-1/16	3	5	1-1/16	15/16	TU816-6 TU816-9 TU816-12	29827 29828 29829
1-1/8-1-3/4	6 9 12 18	3/8	1/2	18-1/8 21-1/8 24-1/8 30-1/8	1-11/32	3-3/4	7-1/4	1-11/32	1-3/32	TU1828-6 TU1828-9 TU1828-12 TU1828-18	29830 29831 19832 29833
1-15/16-2-7/16	9 12 18 24	1/2	5/8	24-1/16 27-1/16 33-1/16 39-1/16	1-5/8	4-1/4	9	1-11/16	1-13/16	TU3139-9 TU3139-12 TU3139-18 TU3139-24	29834 29835 29836 29837

Pillow Blocks – Setscrew Locking

2 Bolt Pillow Block – Setscrew Locking; Extended Inner Race

Features —

Synthetic lip seal with stainless steel flinger provides superior protection for high pressure washdown conditions.

Pre-filled with NSF H1 food grade grease.

Cast stainless steel housing.

Laser marked.

M6 grease fitting.

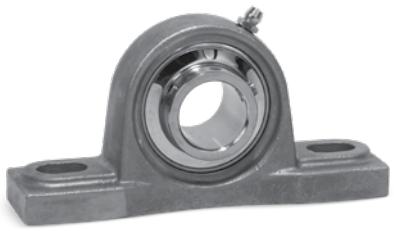

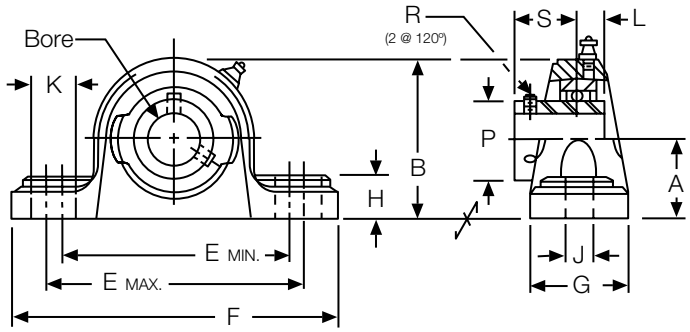

Stainless Steel Material	
AISI 304	AISI 440
Housing, cage, shield, setscrew, seal	Balls, inner/outer ring

ALL DIMENSIONS IN INCHES

Catalog Number	Bore Size	Dimensions (in)														Load Rating* (lbf)	
		A	B	Emax	Emin	F	G	H	J	K	L	P	R (UNF)	S	Bolt Size	C_R	C_O
SSUP4-3/4	3/4	1-5/16	2-9/16	4-1/8	3-3/8	5	1-1/2	9/16	1/2	3/4	0.500	1.142	1/4-28	0.721	3/8	2,901	1,507
SSUP5-1	1	1-7/16	2-25/32	4-1/2	3-3/4	5-1/2	1-1/2	19/32	1/2	3/4	0.563	1.339	1/4-28	0.780	3/8	3,175	1,782
SSUP6-1-3/16	1-3/16	1-11/16	3-1/4	5-1/32	4-15/32	6-1/2	1-7/8	21/32	43/64	25/32	0.626	1.591	1/4-28	0.874	1/2	4,431	2,558
SSUP7-1-1/4	1-1/4	1-7/8	3-21/32	5-9/32	4-23/32	6-9/16	1-7/8	45/64	43/64	25/32	0.689	1.866	5/16-24	1.000	1/2	5,847	3,472
SSUP7-1-7/16	1-7/16	1-7/8	3-21/32	5-9/32	4-23/32	6-9/16	1-7/8	45/64	43/64	25/32	0.689	1.866	5/16-24	1.000	1/2	5,847	3,472
SSUP8-1-1/2	1-1/2	1-15/16	3-15/16	5-11/16	5-1/8	7-1/4	2-1/8	45/64	43/64	25/32	0.748	2.075	5/16-24	1.189	1/2	6,632	4,069
SSUP10-1-15/16	1-15/16	2-1/4	4-29/64	6-17/32	5-31/32	8-1/8	2-3/8	53/64	25/32	29/32	0.748	2.465	3/8-24	1.284	5/8	7,868	5,216

ORDER BY CATALOG NUMBER OR ITEM CODE

Bore Size	Mounted Bearing		Bearing Insert	
	Catalog Number	Item Code	Catalog Number	Item Code
3/4	SSUP4-3/4	G01140	SSUC204-12	G01171
1	SSUP5-1	G01141	SSUC205-16	G01172
1-3/16	SSUP6-1-3/16	G01142	SSUC206-19	G01173
1-1/4	SSUP7-1-1/4	G01143	SSUC207-20	G01174
1-7/16	SSUP7-1-7/16	G01144	SSUC207-23	G01175
1-1/2	SSUP8-1-1/2	G05900	SSUC208-24	G05922
1-15/16	SSUP10-1-15/16	G05901	SSUC210-31	G05923

NOTES: Bore tolerance: +.001”/-.000”.
Recommended shaft tolerance: Nominal +.000”/-.001”.
Max recommended speed is 5000 RPM.
*C_R=dynamic load rating, C_O=static load rating.

Stainless Mounted Bearings

Pillow Blocks – Eccentric Locking Collar

2 Bolt Pillow Block – Eccentric Locking Collar; For Superior Shaft Holding Power

F



Features —

Synthetic lip seal with stainless steel flinger provides superior protection for high pressure washdown conditions.

Pre-filled with NSF H1 food grade grease.

Cast stainless steel housing.

Laser marked.

M6 grease fitting.

Stainless Steel Material	
AISI 304	AISI 440
Housing, cage, shield, setscrew, seal, collar	Balls, inner/outer ring

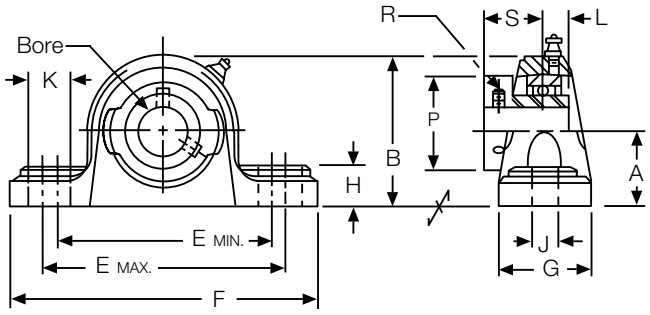

ALL DIMENSIONS IN INCHES

Catalog Number	Bore Size	Dimensions (in)														Load Rating* (lbf)	
		A	B	Emax	Emin	F	G	H	J	K	L	P	R (UNF)	S	Bolt Size	CR	CO
SSHP4-3/4	3/4	1-5/16	2-9/16	4-1/8	3-3/8	5	1-1/2	9/16	1/2	3/4	0.673	1.311	1/4-28	1.047	3/8	2,901	1,507
SSHP5-1	1	1-7/16	2-25/32	4-1/2	3-3/4	5-1/2	1-1/2	19/32	1/2	3/4	0.689	1.500	1/4-28	1.059	3/8	3,175	1,782
SSHP6-1-3/16	1-3/16	1-11/16	3-1/4	5-1/32	4-15/32	6-1/2	1-7/8	21/32	43/64	25/32	0.720	1.713	1/4-28	1.186	1/2	4,431	2,558
SSHP7-1-1/4	1-1/4	1-7/8	3-21/32	5-9/32	4-23/32	6-9/16	1-7/8	45/64	43/64	25/32	0.740	2.087	5/16-24	1.272	1/2	5,847	3,472
SSHP7-1-7/16	1-7/16	1-7/8	3-21/32	5-9/32	4-23/32	6-9/16	1-7/8	45/64	43/64	25/32	0.740	2.087	5/16-24	1.272	1/2	5,847	3,472
SSHP8-1-1/2	1-1/2	1-15/16	3-15/16	5-11/16	5-1/8	7-1/4	2-1/8	45/64	43/64	25/32	0.748	2.283	5/16-24	1.378	1/2	6,632	4,069
SSHP10-1-15/16	1-15/16	2-1/4	4-29/64	6-17/32	5-31/32	8-1/8	2-3/8	53/64	25/32	29/32	0.969	2.697	3/8-24	1.500	5/8	7,868	5,216

ORDER BY CATALOG NUMBER OR ITEM CODE

Bore Size	Mounted Bearing		Bearing Insert	
	Catalog Number	Item Code	Catalog Number	Item Code
3/4	SSHP4-3/4	G01145	SSHC204-12	G01176
1	SSHP5-1	G01146	SSHC205-16	G01177
1-3/16	SSHP6-1-3/16	G01147	SSHC206-19	G01178
1-1/4	SSHP7-1-1/4	G01148	SSHC207-20	G01179
1-7/16	SSHP7-1-7/16	G01149	SSHC207-23	G01180
1-1/2	SSHP8-1-1/2	G05902	SSHC208-24	G05924
1-15/16	SSHP10-1-15/16	G05903	SSHC210-31	G05925

NOTES: Bore tolerance: +.001”/-.000”.
Recommended shaft tolerance: Nominal +.000”/-.001”.
Max recommended speed is 5000 RPM.
*C_R=dynamic load rating, C_O=static load rating.

Flanged Units – Setscrew Locking

2 Bolt Flange – Setscrew Locking; Extended Inner Race

Features —

Synthetic lip seal with stainless steel flinger provides superior protection for high pressure washdown conditions.

Pre-filled with NSF H1 food grade grease.

Cast stainless steel housing.

Laser marked.

M6 grease fitting.



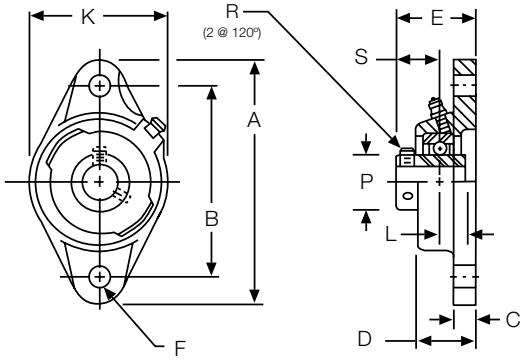

Stainless Steel Material	
AISI 304	AISI 440
Flange, cage, shield, setscrew, seal	Balls, inner/outer ring

ALL DIMENSIONS IN INCHES

Catalog Number	Bore Size	Dimensions (in)											Load Rating* (lbf)	
		A	B	C	D	E	Bolt Size F**	K	L	P	R (UNF)	S	C_R	CO
SSUFL4-3/4	3/4	4-7/16	3-35/64	7/16	1.000	1-5/16	3/8	2-3/8	0.500	1.142	1/4-28	0.721	2,901	1,507
SSUFL5-1	1	5-1/8	3-57/64	1/2	1.063	1-13/32	1/2	2-11/16	0.563	1.339	1/4-28	0.780	3,175	1,782
SSUFL6-1-3/16	1-3/16	5-13/16	4-39/64	1/2	1.219	1-19/32	1/2	3-5/32	0.626	1.591	1/4-28	0.874	4,431	2,558
SSUFL7-1-1/4	1-1/4	6-11/32	5-1/8	35/64	1.344	1-3/4	1/2	3-35/64	0.689	1.866	5/16-24	1.000	5,847	3,472
SSUFL7-1-7/16	1-7/16	6-11/32	5-1/8	35/64	1.344	1-3/4	1/2	3-35/64	0.689	1.866	5/16-24	1.000	5,847	3,472
SSUFL8-1-1/2	1-1/2	6-7/8	5-43/64	35/64	1.422	2-1/64	1/2	3-15/16	0.748	2.075	5/16-24	1.189	6,632	4,069
SSUFL10-1-15/16	1-15/16	7-3/4	6-3/16	19/32	1.578	2-5/32	5/8	4-17/32	0.748	2.465	3/8-24	1.284	7,868	5,216

ORDER BY CATALOG NUMBER OR ITEM CODE

Bore Size	Mounted Bearing		Bearing Insert	
	Catalog Number	Item Code	Catalog Number	Item Code
3/4	SSUFL4-3/4	G01150	SSUC204-12	G01171
1	SSUFL5-1	G01151	SSUC205-16	G01172
1-3/16	SSUFL6-1-3/16	G01152	SSUC206-19	G01173
1-1/4	SSUFL7-1-1/4	G01153	SSUC207-20	G01174
1-7/16	SSUFL7-1-7/16	G01154	SSUC207-23	G01175
1-1/2	SSUFL8-1-1/2	G05904	SSUC208-24	G05922
1-15/16	SSUFL10-1-15/16	G05905	SSUC210-31	G05923

NOTES: Bore tolerance: +.001”/-.000”.
Recommended shaft tolerance: Nominal +.000”/-.001”.
Max recommended speed is 5000 RPM.
*C_R=dynamic load rating, C_O=static load rating.
** Smaller bolt sizes are acceptable with the use of flat washers

Stainless Mounted Bearings

Flanged Units – Setscrew Locking

4 Bolt Flange – Setscrew Locking; Extended Inner Race



Features —

Synthetic lip seal with stainless steel flinger provides superior protection for high pressure washdown conditions.

Pre-filled with NSF H1 food grade grease.

Cast stainless steel housing.

Laser marked.

M6 grease fitting.

Stainless Steel Material	
AISI 304	AISI 440
Flange, cage, shield, setscrew, seal	Balls, inner/outer ring

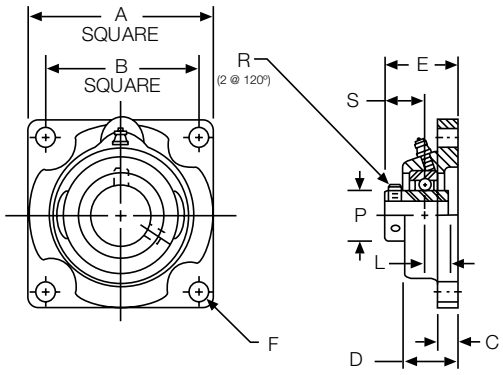

ALL DIMENSIONS IN INCHES

Catalog Number	Bore Size	Dimensions (in)										Load Rating* (lbf)	
		A	B	C	D	E	Bolt Size F**	L	P	R (UNF)	S	C_R	C_O
SSUF4-3/4	3/4	3-3/8	2-33/64	15/32	1.000	1-5/16	3/8	0.500	1.142	1/4-28	0.721	2,901	1,507
SSUF5-1	1	3-3/4	2-3/4	35/64	1.063	1-13/32	3/8	0.563	1.339	1/4-28	0.780	3,175	1,782
SSUF6-1-3/16	1-3/16	4-1/4	3-17/64	35/64	1.219	1-19/32	3/8	0.626	1.591	1/4-28	0.874	4,431	2,558
SSUF7-1-1/4	1-1/4	4-39/64	3-5/8	5/8	1.344	1-3/4	7/16	0.689	1.866	5/16-24	1.000	5,847	3,472
SSUF7-1-7/16	1-7/16	4-39/64	3-5/8	5/8	1.344	1-3/4	7/16	0.689	1.866	5/16-24	1.000	5,847	3,472
SSUF8-1-1/2	1-1/2	5-1/8	4-1/64	5/8	1.422	2-1/64	1/2	0.748	2.075	5/16-24	1.189	6,632	4,069
SSUF10-1-15/16	1-15/16	5-13/32	4-3/8	23/32	1.578	2-5/32	1/2	0.748	2.465	3/8-24	1.284	7,868	5,216

ORDER BY CATALOG NUMBER OR ITEM CODE

Bore Size	Mounted Bearing		Bearing Insert	
	Catalog Number	Item Code	Catalog Number	Item Code
3/4	SSUF4-3/4	G01155	SSUC204-12	G01171
1	SSUF5-1	G01156	SSUC205-16	G01172
1-3/16	SSUF6-1-3/16	G01157	SSUC206-19	G01173
1-1/4	SSUF7-1-1/4	G01158	SSUC207-20	G01174
1-7/16	SSUF7-1-7/16	G01159	SSUC207-23	G01175
1-1/2	SSUF8-1-1/2	G05906	SSUC208-24	G05922
1-15/16	SSUF10-1-15/16	G05907	SSUC210-31	G05923

NOTES: Bore tolerance: +.001”/-.000”.
Recommended shaft tolerance: Nominal +.000”/-.001”.
Max recommended speed is 5000 RPM.
*C_R=dynamic load rating, C_O=static load rating.
** Smaller bolt sizes are acceptable with the use of flat washers

Flanged Units – Setscrew Locking

3 Bolt Flange – Setscrew Locking; Extended Inner Race

Features —

Synthetic lip seal with stainless steel flinger provides superior protection for high pressure washdown conditions.

Pre-filled with NSF H1 food grade grease.

Cast stainless steel housing.

Laser marked.

M6 grease fitting.



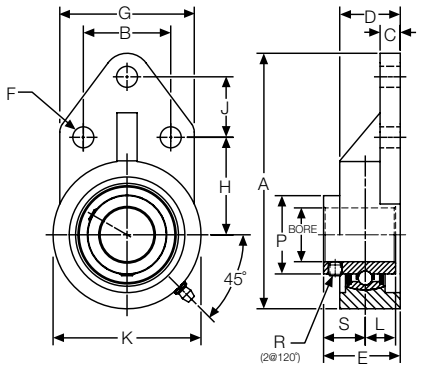

Stainless Steel Material	
AISI 304	AISI 440
Flange, cage, shield, setscrew, seal	Balls, inner/outer ring

ALL DIMENSIONS IN INCHES

Catalog Number	Bore Size	Dimensions (in)														Load Rating* (lbf)	
		A	B	C	D	E	Bolt Size F**	G	H	J	K	L	P	R (UNF)	S	CR	CO
SSUFB4-3/4	3/4	4-1/4	1-1/2	5/16	1	1.35	5/16	2-3/8	1-11/16	7/8	2-1/2	0.500	1.142	1/4-28	0.850	2,901	1,507
SSUFB5-1	1	4-3/4	1-5/8	3/8	1-5/64	1.43	5/16	2-1/2	1-13/16	1-1/8	2-3/4	0.563	1.339	1/4-28	0.867	3,175	1,782
SSUFB6-1-3/16	1-3/16	5-3/8	1-7/8	3/8	1-7/64	1-19/32	5/16	2-3/4	2-1/16	1-1/4	3-1/4	0.626	1.591	1/4-28	0.968	4,431	2,558
SSUFB7-1-1/4	1-1/4	6-1/8	2	1/2	1-1/4	1-3/4	7/16	3-1/4	2-3/8	1-1/4	3-3/4	0.689	1.866	5/16-24	1.061	5,847	3,472
SSUFB7-1-7/16	1-7/16	6-1/8	2	1/2	1-1/4	1-3/4	7/16	3-1/4	2-3/8	1-1/4	3-3/4	0.689	1.866	5/16-24	1.061	5,847	3,472
SSUFB8-1-1/2	1-1/2	6-15/32	1-31/32	5/8	1-13/32	2-1/64	3/8	3-1/16	2-3/8	1-5/8	3-15/16	0.748	2.075	5/16-24	1.267	6,632	4,069
SSUFB10-1-15/16	1-15/16	7-1/2	2-3/4	1/2	1-1/2	2-5/32	7/16	4	2-15/16	1-5/8	4-5/8	0.748	2.465	3/8-24	1.408	7,868	5,216

ORDER BY CATALOG NUMBER OR ITEM CODE

Bore Size	Mounted Bearing		Bearing Insert	
	Catalog Number	Item Code	Catalog Number	Item Code
3/4	SSUFB4-3/4	G05908	SSUC204-12	G01171
1	SSUFB5-1	G05909	SSUC205-16	G01172
1-3/16	SSUFB6-1-3/16	G05910	SSUC206-19	G01173
1-1/4	SSUFB7-1-1/4	G05911	SSUC207-20	G01174
1-7/16	SSUFB7-1-7/16	G05912	SSUC207-23	G01175
1-1/2	SSUFB8-1-1/2	G05913	SSUC208-24	G05922
1-15/16	SSUFB10-1-15/16	G05914	SSUC210-31	G05923

NOTES: Bore tolerance: +.001”/-.000”.
Recommended shaft tolerance: Nominal +.000”/-.001”.
Max recommended speed is 5000 RPM.
*CR=dynamic load rating, CO=static load rating.
** Smaller bolt sizes are acceptable with the use of flat washers

Stainless Mounted Bearings

Take Up Units – Setscrew Locking

Wide Slot Take Up Unit – Setscrew Locking; Extended Inner Race



Features —

Synthetic lip seal with stainless steel flinger provides superior protection for high pressure washdown conditions.

Pre-filled with NSF H1 food grade grease.

Cast stainless steel housing.

Laser marked.

M6 grease fitting.

Stainless Steel Material	
AISI 304	AISI 440
Flange, cage, shield, setscrew, seal	Balls, inner/outer ring

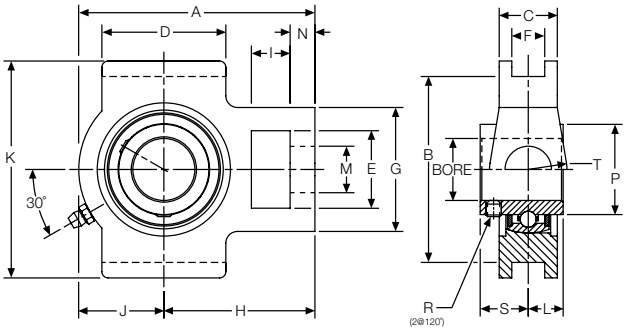

ALL DIMENSIONS IN INCHES

Catalog Number	Bore Size	Dimensions (in)																	Load Rating* (lbf)	
		A	B	C	D	E	F	G	H	I	J	K	L	M	N	P	R (UNF)	S	CR	CO
SSUT4-3/4	3/4	3-11/16	2-63/64	13/16	2-1/64	1.250	0.469	2-1/64	2-13/32	0.625	1-9/32	3-1/2	0.500	0.750	0.391	1.142	1/4-28	0.721	2,901	1,507
SSUT5-1	1	3-13/16	2-63/64	15/16	2-1/64	1.250	0.469	2-1/64	2-7/16	0.625	1-3/8	3-1/2	0.563	0.750	0.391	1.339	1/4-28	0.780	3,175	1,782
SSUT6-1-3/16	1-3/16	4-29/64	3-1/2	1-3/32	2-1/4	1.453	0.469	2-7/32	2-3/4	0.625	1-45/64	4-1/64	0.626	0.859	0.391	1.591	1/4-28	0.874	4,431	2,558
SSUT7-1-1/4	1-1/4	5-5/64	3-1/2	1-3/16	2-33/64	1.453	0.469	2-33/64	3-5/64	0.625	2	4-1/64	0.689	0.859	0.516	1.866	5/16-24	1.000	5,847	3,472
SSUT7-1-7/16	1-7/16	5-5/64	3-1/2	1-3/16	2-33/64	1.453	0.469	2-33/64	3-5/64	0.625	2	4-1/64	0.689	0.859	0.516	1.866	5/16-24	1.000	5,847	3,472
SSUT8-1-1/2	1-1/2	5-43/64	4-1/64	1-5/16	3-17/64	1.938	0.625	3-17/64	3-1/2	0.750	2-11/64	4-31/64	0.748	1.141	0.625	2.075	5/16-24	1.189	6,632	4,069
SSUT10-1-15/16	1-15/16	5-55/64	4-1/64	1-15/32	3-17/64	1.938	0.625	3-17/64	3-35/64	0.750	2-5/16	4-39/64	0.748	1.141	0.625	2.465	3/8-24	1.284	7,868	5,216

ORDER BY CATALOG NUMBER OR ITEM CODE

Bore Size	Mounted Bearing		Bearing Insert	
	Catalog Number	Item Code	Catalog Number	Item Code
3/4	SSUT4-3/4	G05915	SSUC204-12	G01171
1	SSUT5-1	G05916	SSUC205-16	G01172
1-3/16	SSUT6-1-3/16	G05917	SSUC206-19	G01173
1-1/4	SSUT7-1-1/4	G05918	SSUC207-20	G01174
1-7/16	SSUT7-1-7/16	G05919	SSUC207-23	G01175
1-1/2	SSUT8-1-1/2	G05920	SSUC208-24	G05922
1-15/16	SSUT10-1-15/16	G05921	SSUC210-31	G05923

NOTES: Bore tolerance: +.001”/-.000”.
Recommended shaft tolerance: Nominal +.000”/-.001”.
Max recommended speed is 5000 RPM.
*C_R=dynamic load rating, C_O=static load rating.