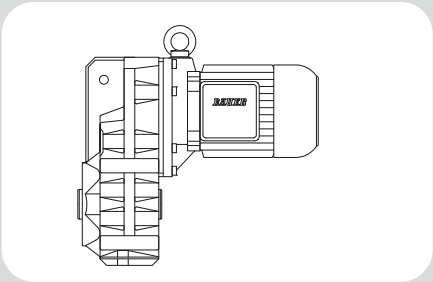

11

BF-series shaft-mounted geared motors - Dimensions

Dimension - Standard **288**
BF06 288
BF10-BF10Z 290
BF20-BF20Z 292
BF30-BF30Z 294
BF40-BF40Z 296
BF50-BF50Z 298
BF60-BF60Z 300
BF70-BF70Z 302
BF80-BF80Z 304
BF90-BF90Z 306
Dimension - Tandem Gearbox **308**
BF10G06 308
BF20G06 310
BF30G06 312
BF40G10 314
BF50G10 316
BF60G20 318
BF70G20 320
BF80G40 322
BF90G50 324
Additional Dimension Sheet **327**
Splined shaft 327
Shrink disc coupling (SSV) 328
Shrink disc coupling with (SSV) cover 329
Tapped Holes Side (H) → Shaft Cover 330
Rubber buffer for torque restraint 331
Assembly tools for hollow shaft and keyway 332
Assembly tools for shaft mounted gears with splined shaft 334
Shaft cap (VK) 336
Shaft cover (VD) 337

Dimension - Standard

BF06
with torque arm
Code -0./

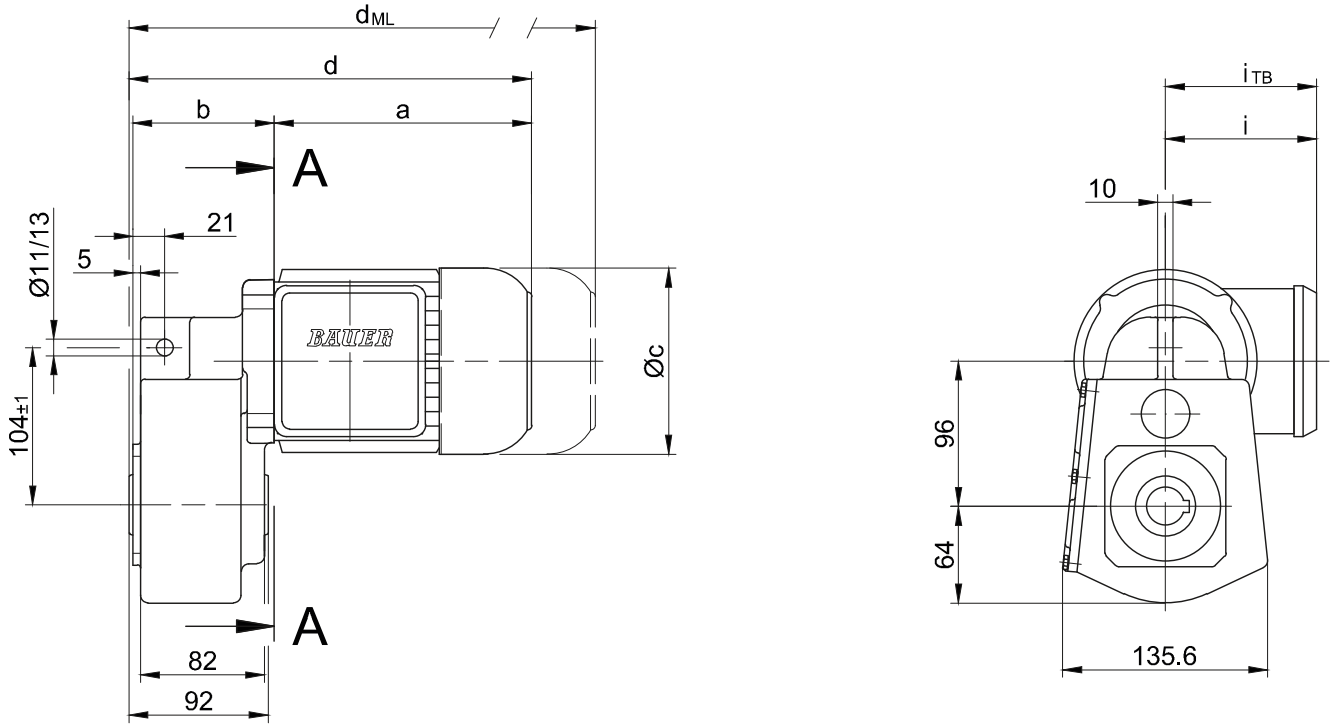

Code -.4/

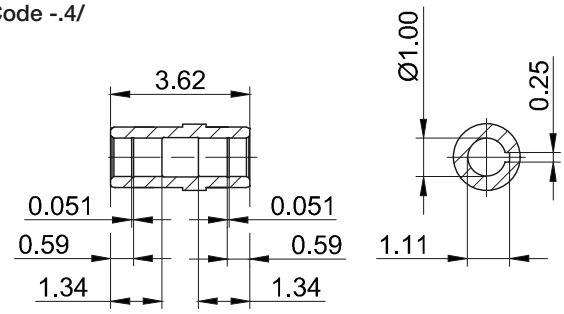

Code -.1/

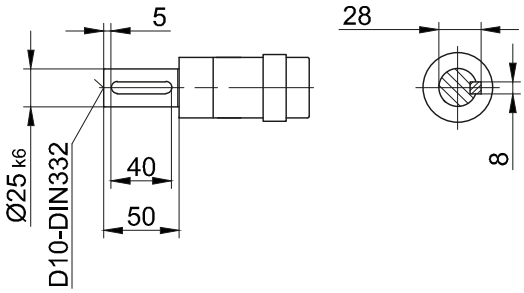

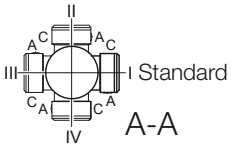

Type	a	b	c	d	i	Design with motor extensions				
						i_{TB}	Brake	Encoder	Brake with Encoder	Back Stop
							d_{ML}	d_{ML}	d_{ML}	d_{ML}
BF06-../D..05.A.	170.5	93.5	123	266.5	101	117	306	366.5	404	-
BF06-../D..06.A.	170.5	93.5	123	266.5	99	119	306	366.5	404	-
BF06-../D..07.A.	190.5	93.5	123	286.5	99	119	326	386.5	424	-
BF06-../D..08.A.	199.5	141.5	156	343.5	114.5	136.5	407	453	514.5	407
BF06-../D..08.B.	229.5	141.5	156	373.5	114.5	136.5	437	483	544	437
Dimensions in millimetres (mm)										

The actual gearbox design can vary from the geometry shown. Generate drive specific 3D and 2D geometries under www.BauerCat.com.

BF06

Flange with tapped holes
Code -7./

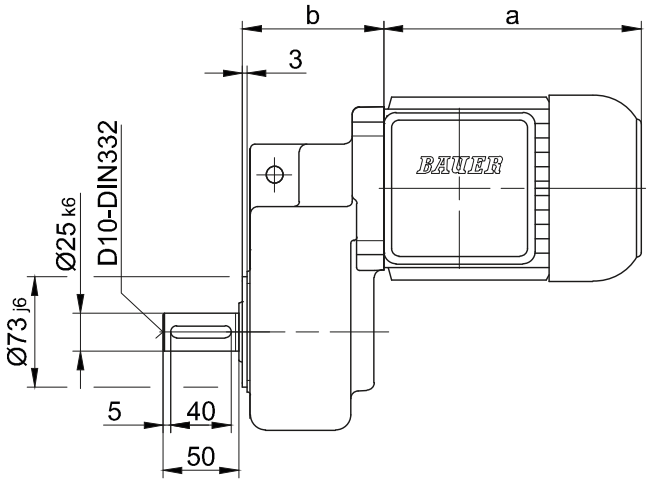

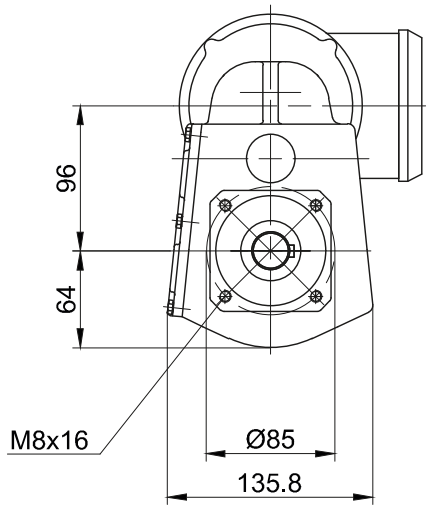

Flange with clearance holes
Code -3.V/
(Code -4.V/)

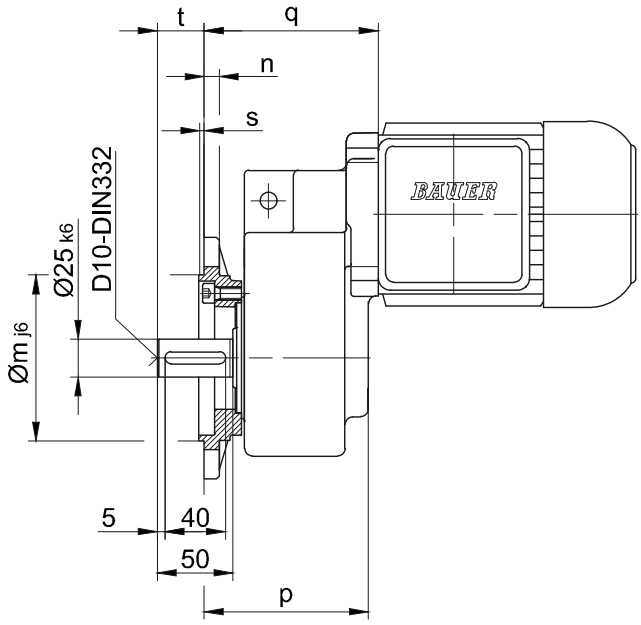

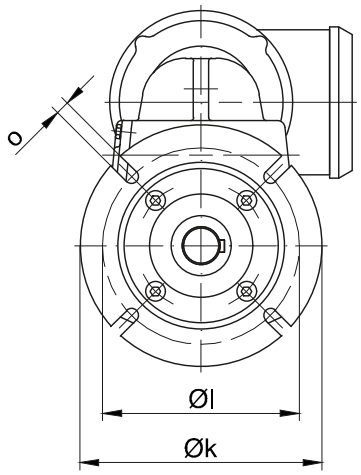

Flange Dimensions											
Type	Design	k	l	m	n	o	p	q[1)]	q[2)]	s	t
BF06	Code -3./	140	115	95	10	9	108.5	115	163	3	31
BF06	Code -4./	160	130	110	10	9	108.5	115	163	3.5	31
Dimensions in millimetres (mm)											

q[1)] only for D05; D06; D07
q[2)] only for D08..

The actual gearbox design can vary from the geometry shown. Generate drive specific 3D and 2D geometries under www.BauerCat.com.

Dimension - Standard

BF10-BF10Z
with torque arm
Code -0./

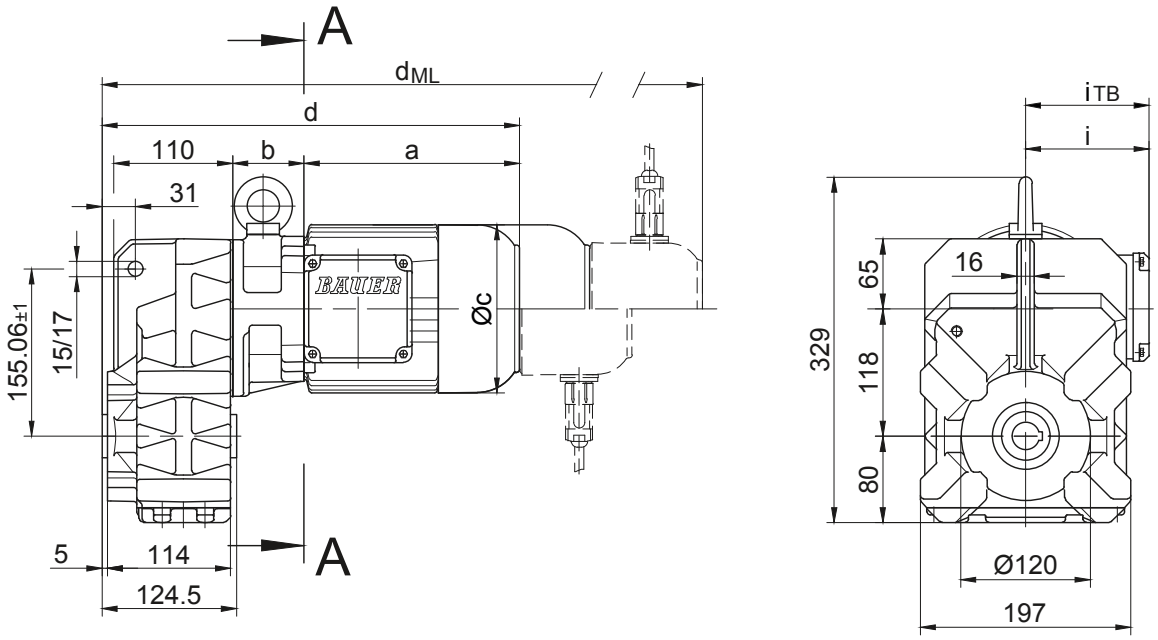

Code -.4/

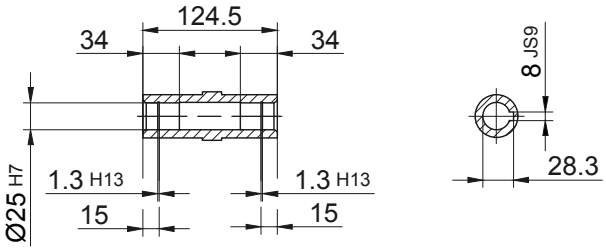

Code -.1/

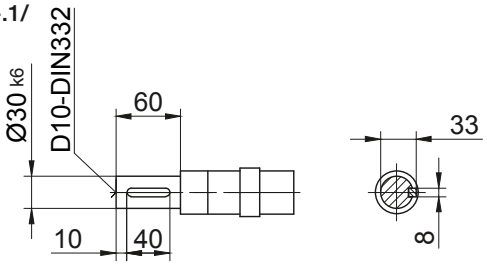

Code .-5/

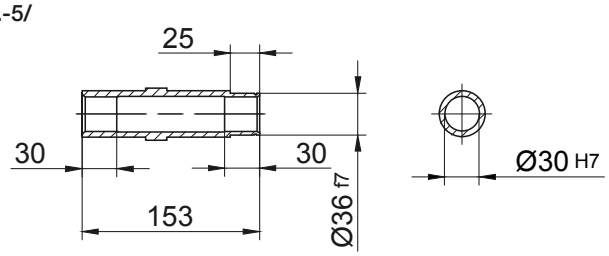

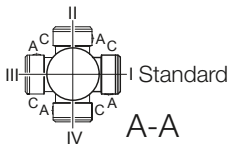

Type	a	b	c	d	i	Design with motor extensions				
						i_{TB}	Brake	Encoder	Brake with Encoder	Back Stop
							d_{ML}	d_{ML}	d_{ML}	d_{ML}
BF10Z-../D04.A.	142.5	86	110.5	349.5	90	112	393	437	480.5	-
BF10-../D..05.A.	170.5	62	123	353.5	101	117	395.5	456	493.5	-
BF10Z-../D..05.A.	170.5	88	123	379.5	101	117	421.6	482	519.5	-
BF10-../D..06.A.	170.5	62	123	353.5	99	119	395.5	456	493.5	-
BF10Z-../D..06.A.	170.5	88	123	379.5	99	119	421.5	482	519.5	-
BF10-../D..07.A.	190.5	62	123	373.5	99	119	415.5	476	513.5	-
BF10Z-../D..07.A.	190.5	88	123	399.5	99	119	441.5	502	539.5	-
BF10-../D..08.A.	199.5	66	156	386.5	114.5	136.5	452.5	498.5	560	452.5
BF10Z-../D..08.A.	199.5	132	156	452.5	114.5	136.5	518.5	564.5	626	518.5
BF10-../D..08.B.	229.5	66	156	416.5	114.5	136.5	482.5	528.5	589.5	482.5
BF10Z-../D..08.B.	229.5	132	156	482.5	114.5	136.5	548.5	594.5	655.5	548.5
BF10-../D..09.A.	250.5	80.5	176	452	124	157	545	559.5	649	545
BF10-../D..09.B.	308.5	80.5	176	510	124	157	603	617	707	603

Dimensions in millimetres (mm)

The actual gearbox design can vary from the geometry shown. Generate drive specific 3D and 2D geometries under www.BauerCat.com.

BF10-BF10Z

Flange with tapped holes
Code -7./

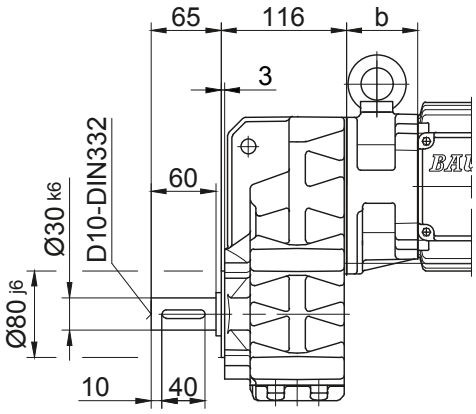

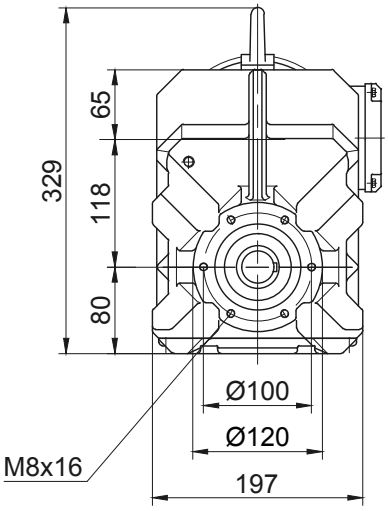

Flange with clearance holes
Code -3./
(Code -2./)

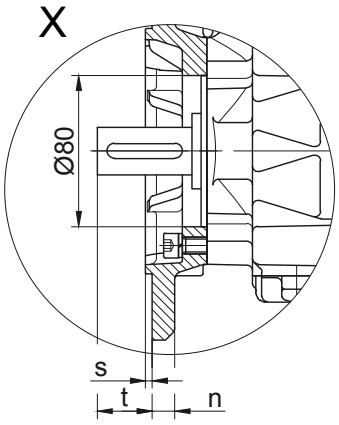

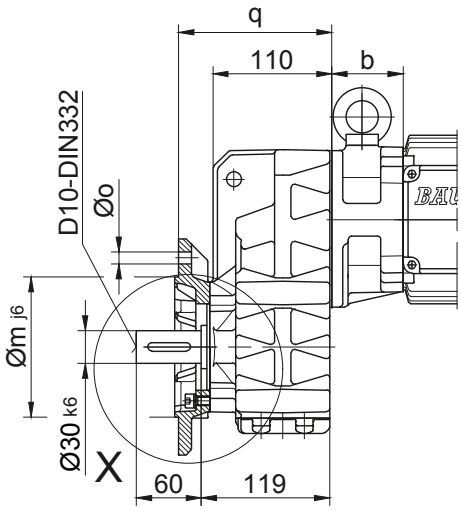

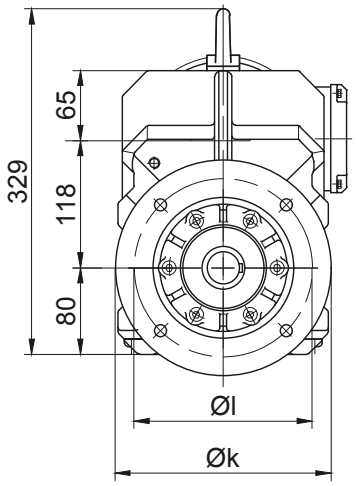

Flange Dimensions									
Type	Design	k	l	m	n	o	q	s	t
BF10..	Code -3./	200	165	130	12	11	142	3.5	39
BF10..	Code -2./	160	130	110	10	9	135	3.5	46
Dimensions in millimetres (mm)									

Foot with tapped holes left and right
Code -6.LR/

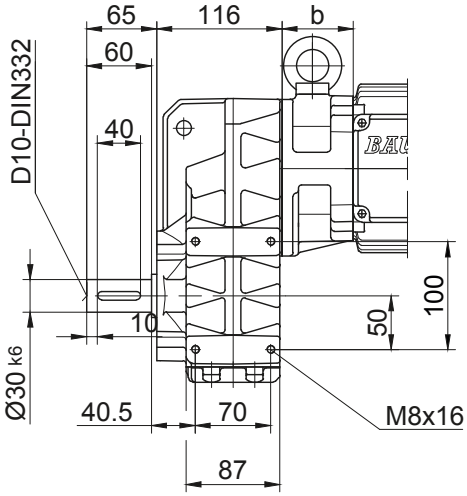

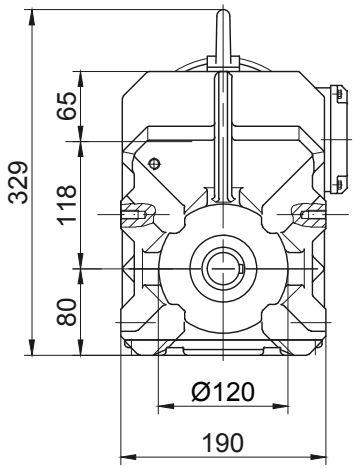

The actual gearbox design can vary from the geometry shown. Generate drive specific 3D and 2D geometries under www.BauerCat.com.

BF20-BF20Z
with torque arm
Code -0./

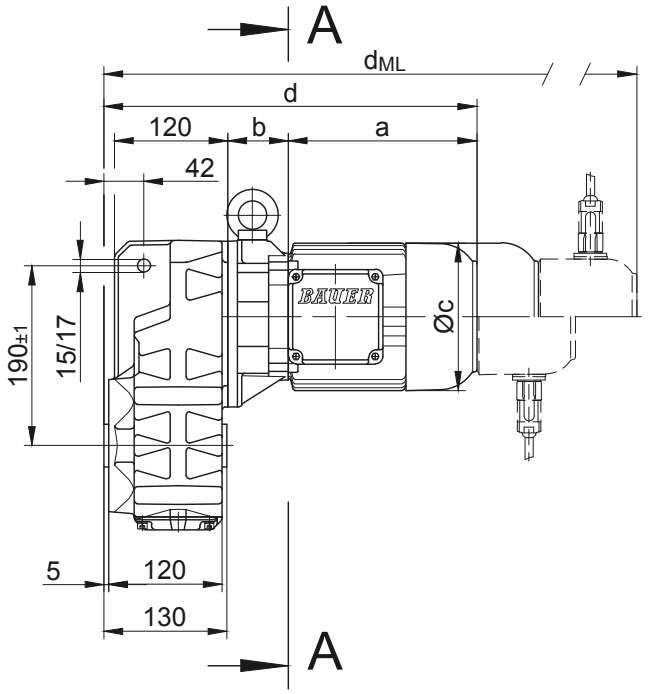

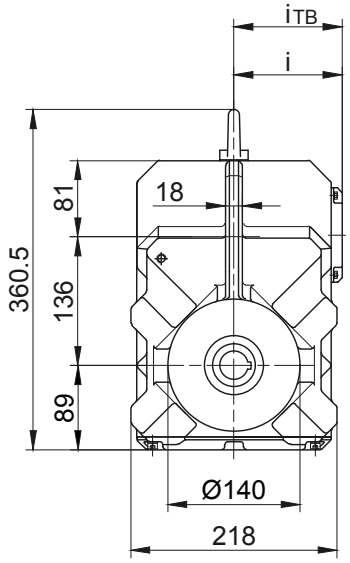

Code -.4/

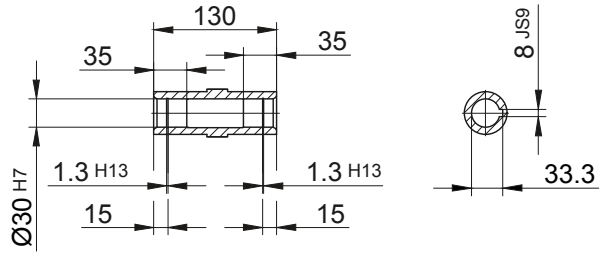

Code -.1/

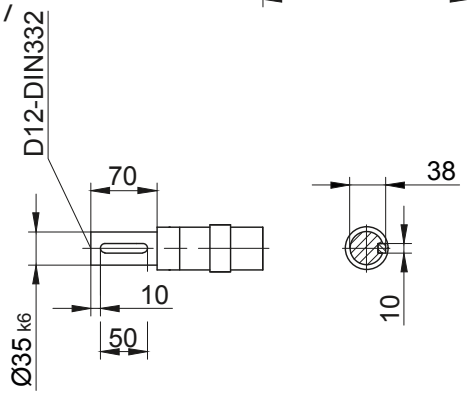

Code -.5/

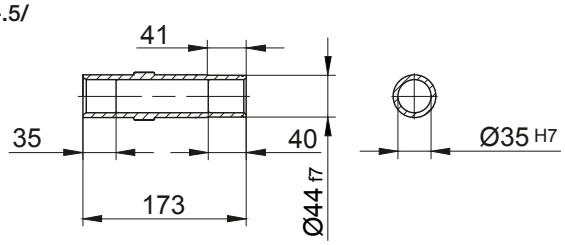

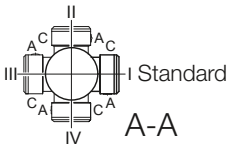

Type	a	b	c	d	i	Design with motor extensions				
						i_{TB}	Brake	Encoder	Brake with Encoder	Back Stop
							d_{ML}	d_{ML}	d_{ML}	d_{ML}
BF20Z-../D04.A.	142.5	100	110.5	373.5	90	112	417	461	504.5	-
BF20-../D..05.A.	170.5	60	123	361.5	101	117	403.5	464	501.5	-
BF20Z-../D..05.A.	170.5	102	123	403.5	101	117	445.5	506	543.5	-
BF20-../D..06.A.	170.5	60	123	361.5	99	119	403.5	464	501.5	-
BF20Z-../D..06.A.	170.5	102	123	403.5	99	119	445.5	506	543.5	-
BF20-../D..07.A.	190.5	60	123	381.5	99	119	423.5	484	521.5	-
BF20Z-../D..07.A.	190.5	102	123	423.5	99	119	465.5	526	563.5	-
BF20-../D..08.A.	199.5	64	156	394.5	114.5	136.5	460.5	506.5	568	460.5
BF20Z-../D..08.A.	199.5	146	156	476.5	114.5	136.5	542.5	588.5	650	542.5
BF20-../D..08.B.	229.5	64	156	424.5	114.5	136.5	490.5	536.5	597.5	490.5
BF20Z-../D..08.B.	229.5	146	156	506.5	114.5	136.5	572.5	618.5	679.5	572.5
BF20-../D..09.A.	250.5	78.5	176	460	124	157	553	567.5	657	553
BF20-../D..09.B.	308.5	78.5	176	518	124	157	611	625	715	611

Dimensions in millimetres (mm)

The actual gearbox design can vary from the geometry shown. Generate drive specific 3D and 2D geometries under www.BauerCat.com.

BF20-BF20Z

Flange with tapped holes
Code -7./

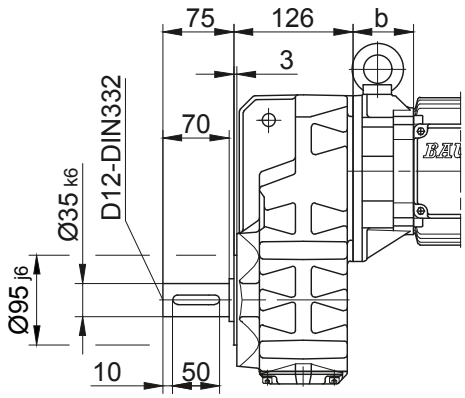

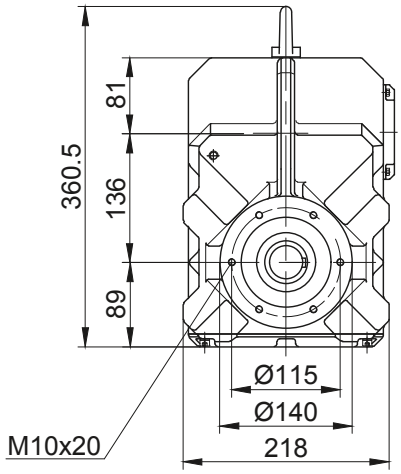

Flange with clearance holes
Code -3./
(Code -2./)

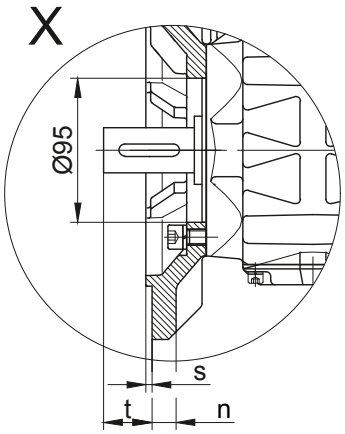

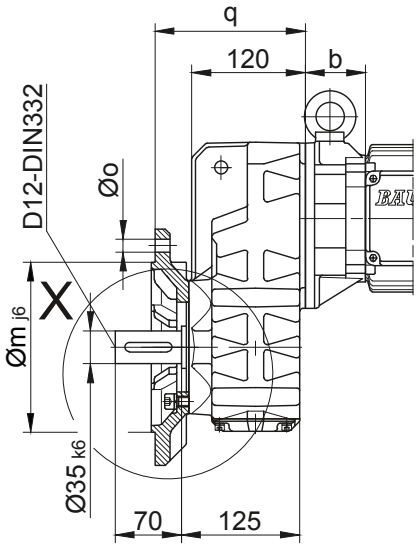

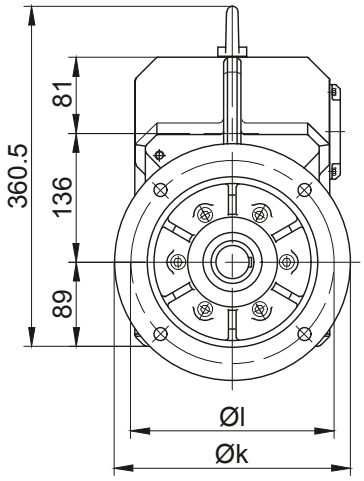

Flange Dimensions									
Type	Design	k	l	m	n	o	q	s	t
BF20..	Code -3./	250	215	180	16	13.5	159	4	42
BF20..	Code -2./	200	165	130	12	11	150	3.5	51
Dimensions in millimetres (mm)									

Foot with tapped holes left and right
Code -6.LR/

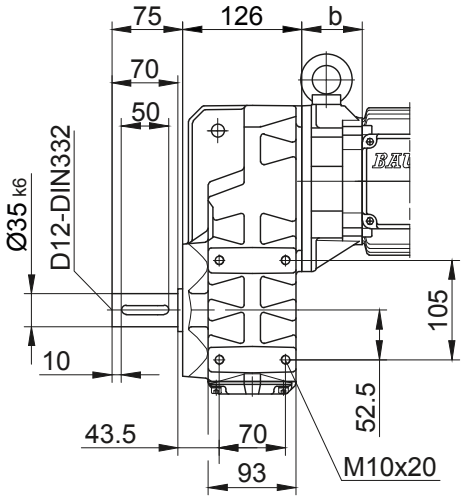

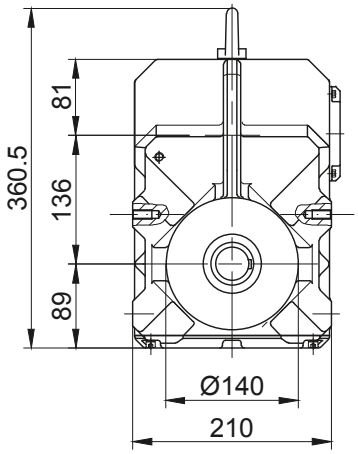

The actual gearbox design can vary from the geometry shown. Generate drive specific 3D and 2D geometries under www.BauerCat.com.

BF30-BF30Z

with torque arm

Code -0./

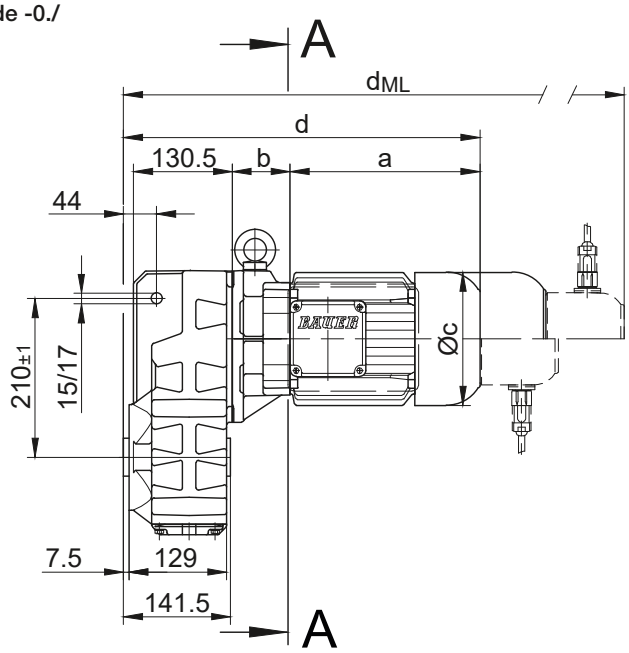

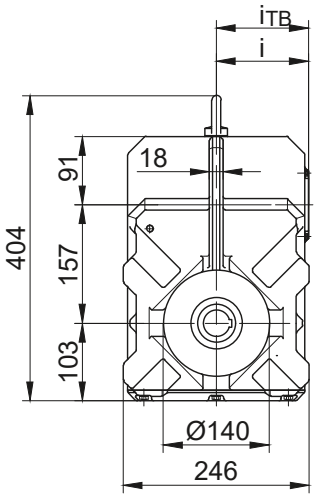

Code -.1/

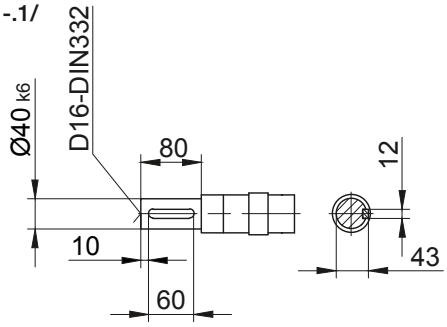

Code -.4/

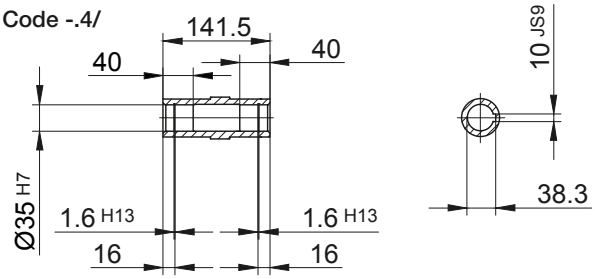

Code -.5/

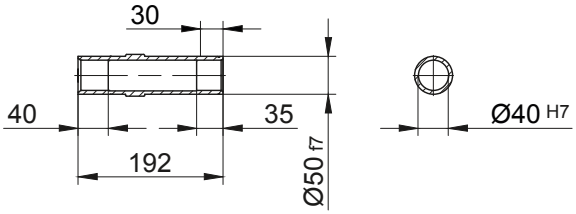

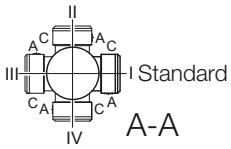

Type	a	b	c	d	i	Design with motor extensions				
						i_{TB}	Brake	Encoder	Brake with Encoder	Back Stop
							d_{ML}	d_{ML}	d_{ML}	d_{ML}
BF30-../D..05.A.	170.5	58	123	372.5	101	117	414.5	475	512.5	-
BF30Z-../D..05.A.	170.5	133.5	123	448	101	117	490	550.5	588	-
BF30-../D..06.A.	170.5	58	123	372.5	99	119	414.5	475	512.5	-
BF30Z-../D..06.A.	170.5	133.5	123	448	99	119	490	550.5	588	-
BF30-../D..07.A.	190.5	58	123	392.5	99	119	434.5	495	532.5	-
BF30Z-../D..07.A.	190.5	133.5	123	468	99	119	510	570.5	608	-
BF30-../D..08.A.	199.5	62	156	405.5	114.5	136.5	471.5	517.5	579	471.5
BF30Z-../D..08.A.	199.5	137.5	156	481	114.5	136.5	547	593	654.5	547
BF30-../D..08.B.	229.5	62	156	435.5	114.5	136.5	501.5	547.5	608.5	501.5
BF30Z-../D..08.B.	229.5	137.5	156	511	114.5	136.5	577	623	684	577
BF30-../D..09.A.	250.5	76.5	176	471	124	157	564	578.5	668	564
BF30Z-../D..09.A.	250.5	152	176	546.5	124	157	639.5	654	743.5	639.5
BF30-../D..09.B.	308.5	76.5	176	529	124	157	622	636	726	622
BF30Z-../D..09.B.	308.5	152	176	604.5	124	157	697.5	711.5	801.5	697.5
BF30-../D..11.A.	319	83	218	546	165	176	644	653.5	746	644
BF30-../D..11.B.	387	83	218	614	165	176	710	721.5	814	710

Dimensions in millimetres (mm)

The actual gearbox design can vary from the geometry shown. Generate drive specific 3D and 2D geometries under www.BauerCat.com.

BF30-BF30Z

Flange with tapped holes
Code -7./

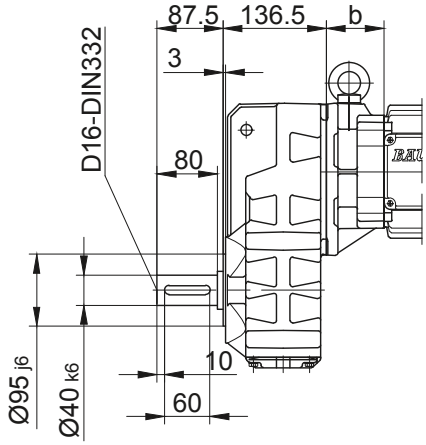

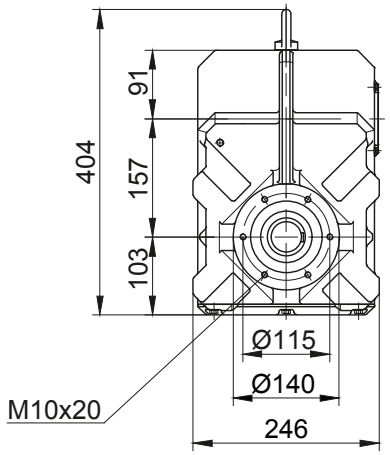

Flange with clearance holes
Code -3./
(Code -2./)

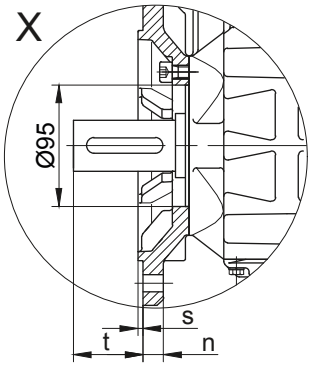

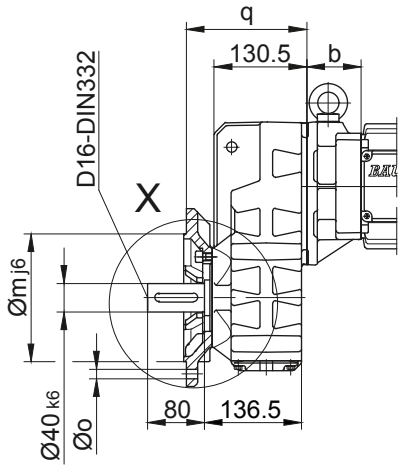

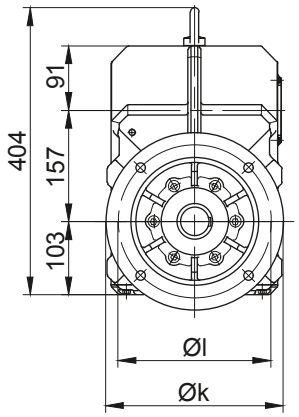

Flange Dimensions									
Type	Design	k	l	m	n	o	q	s	t
BF30..	Code -3./	250	215	180	16	13.5	169.5	4	54.5
BF30..	Code -2./	200	165	130	12	11	160.5	3.5	63.5
Dimensions in millimetres (mm)									

Foot with tapped holes left and right
Code -6.LR/

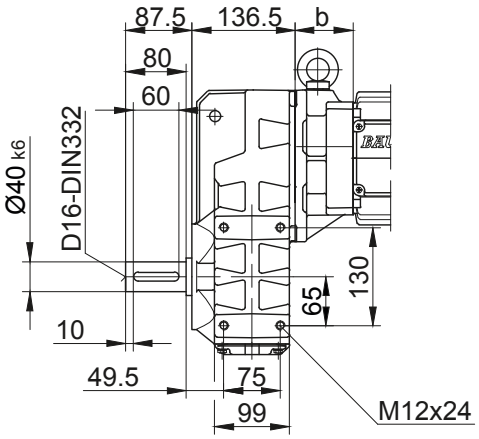

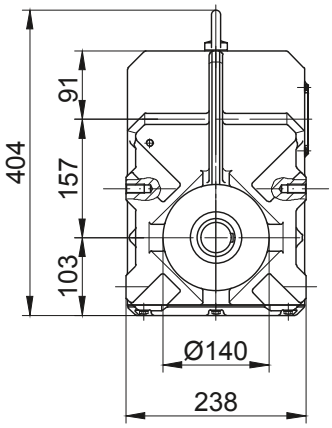

The actual gearbox design can vary from the geometry shown. Generate drive specific 3D and 2D geometries under www.BauerCat.com.

BF40-BF40Z
with torque arm
Code -0./

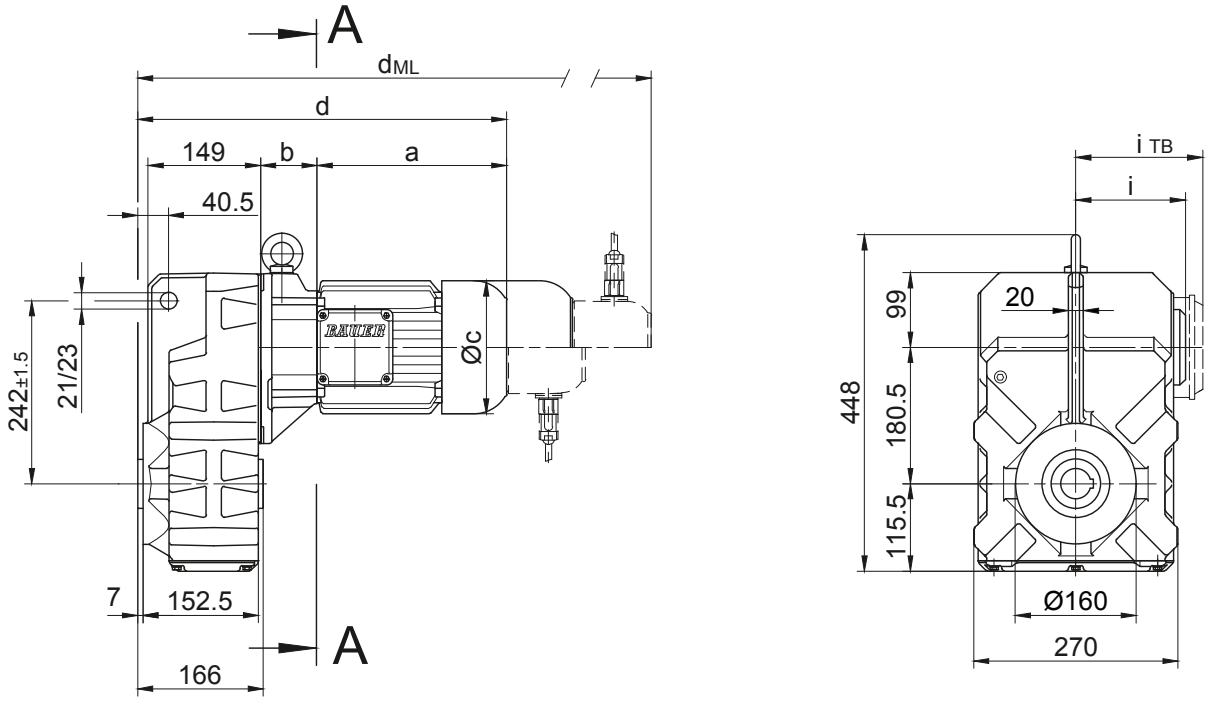

Code -.1/

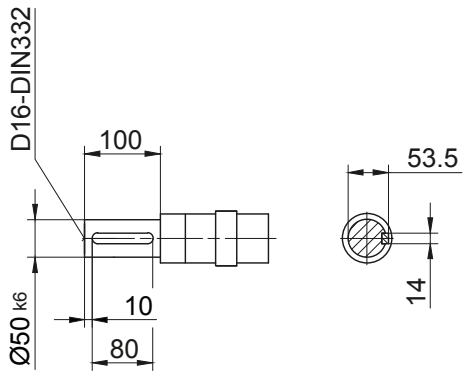

Code -.4/

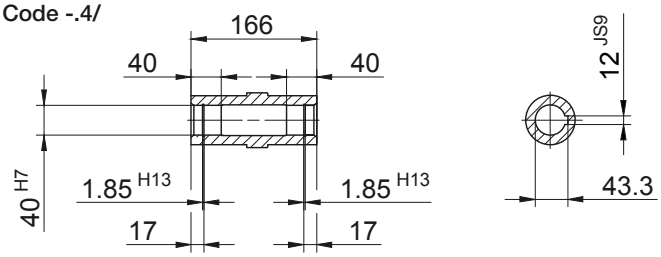

Code -.5/

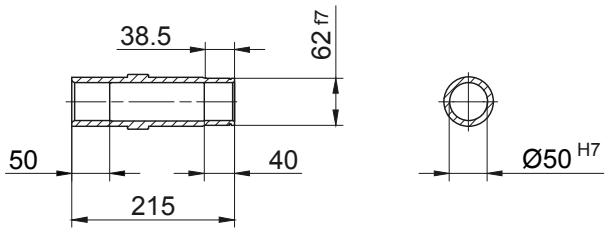

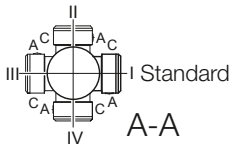

Type	a	b	c	d	i	Design with motor extensions				
						i_{TB}	Brake	Encoder	Brake with Encoder	Back Stop
							d_{ML}	d_{ML}	d_{ML}	d_{ML}
BF40Z-../D..05.A.	170.5	138.5	123	471.5	101	117	513.5	574	611.5	-
BF40Z-../D..06.A.	170.5	138.5	123	471.5	99	119	513.5	574	611.5	-
BF40Z-../D..07.A.	190.5	138.5	123	491.5	99	119	533.5	594	631.5	-
BF40-../D..08.A.	199.5	60	156	422	114.5	136.5	488	534	595.5	488
BF40Z-../D..08.A.	199.5	142.5	156	504.5	114.5	136.5	570.5	616.5	678	570.5
BF40-../D..08.B.	229.5	60	156	452	114.5	136.5	518	564	625	518
BF40Z-../D..08.B.	229.5	142.5	156	534.5	114.5	136.5	600.5	646.5	707.5	600.5
BF40-../D..09.A.	250.5	74.5	176	487.5	124	157	580.5	595	684.5	580.5
BF40Z-../D..09.A.	250.5	157	176	570	124	157	663	677.5	767	663
BF40-../D..09.B.	308.5	74.5	176	545.5	124	157	638.5	652.5	742.5	638.5
BF40Z-../D..09.B.	308.5	157	176	628	124	157	721	735	825	721
BF40-../D..11.A.	319	81	218	562.5	165	176	660.5	670	762.5	660.5
BF40-../D..11.B.	387	81	218	630.5	165	176	726.5	738	830.5	726.5

Dimensions in millimetres (mm)

The actual gearbox design can vary from the geometry shown. Generate drive specific 3D and 2D geometries under www.BauerCat.com.

BF40-BF40Z

Flange with tapped holes
Code -7./

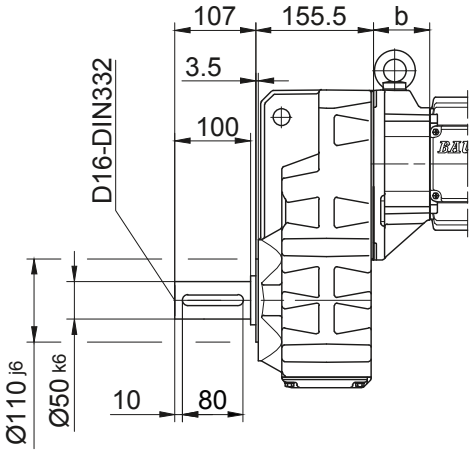

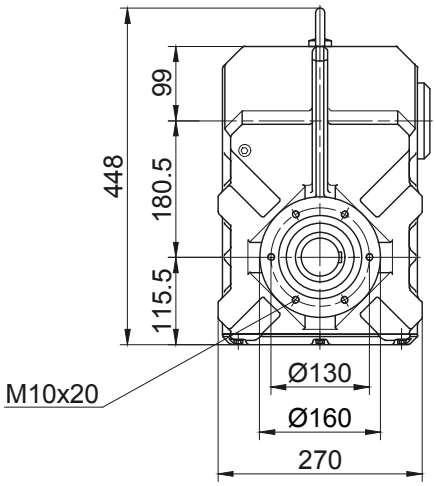

Flange with clearance holes
Code -3./
(Code -4./)

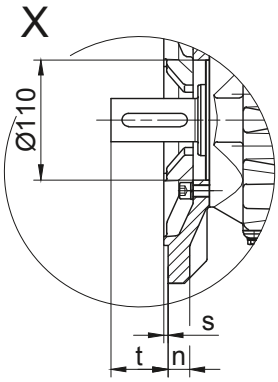

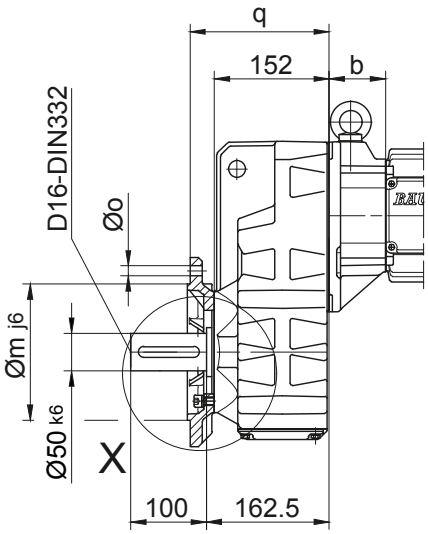

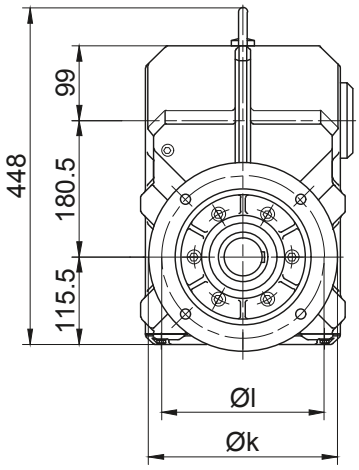

Flange Dimensions									
Type	Design	k	l	m	n	o	q	s	t
BF40..	Code -3./	250	215	180	16	13.5	184	4	78.5
BF40..	Code -4./	300	265	230	20	13.5	190	4	72.5
Dimensions in millimetres (mm)									

Foot with tapped holes left and right
Code -6.LR/

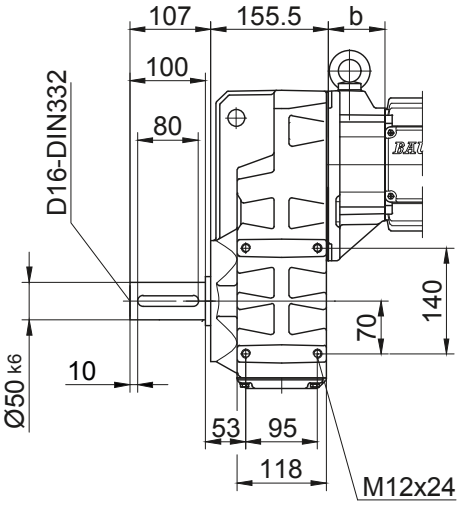

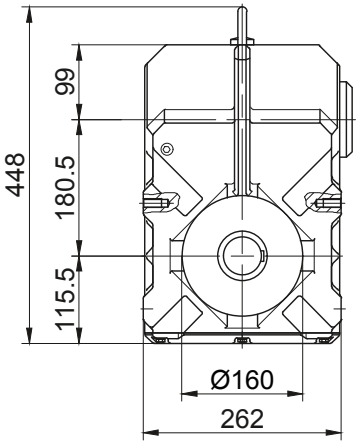

The actual gearbox design can vary from the geometry shown. Generate drive specific 3D and 2D geometries under www.BauerCat.com.

BF50-BF50Z

with torque arm

Code -0./

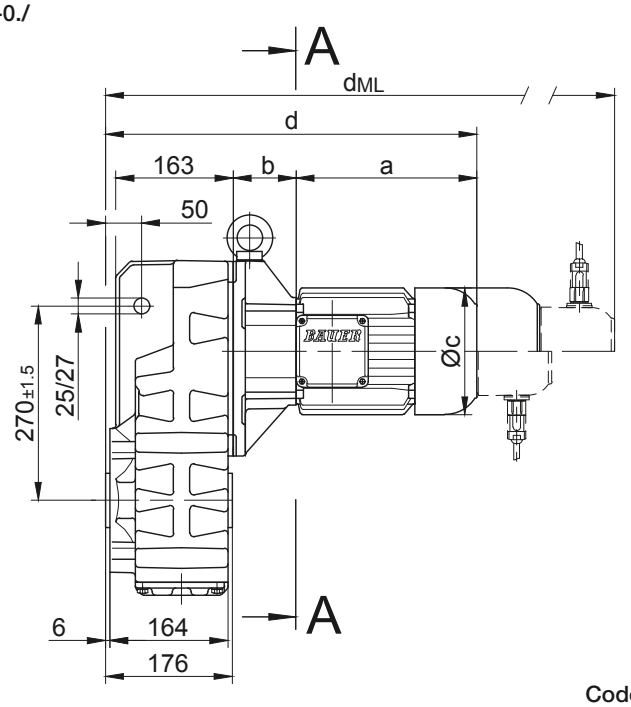

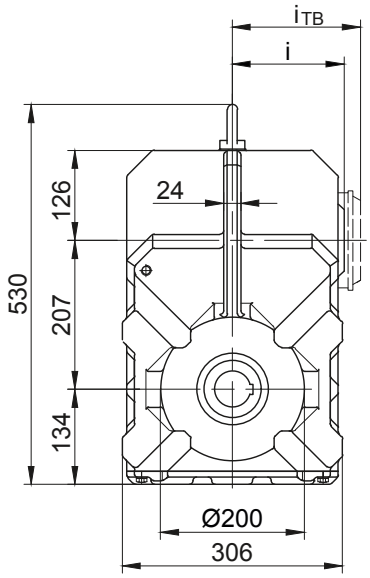

Code -.1/

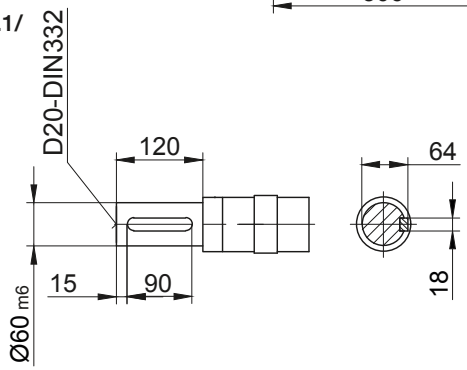

Code -.4/

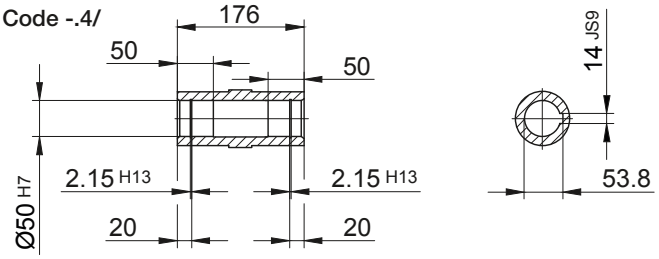

Code -.5/

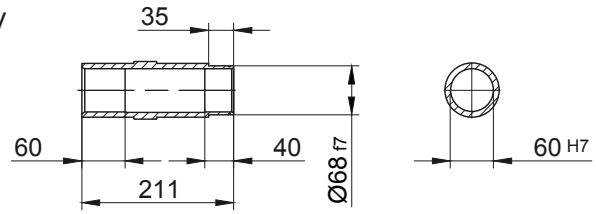

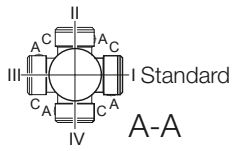

Type	a	b	c	d	i	Design with motor extensions				
						i_{TB}	Brake	Encoder	Brake with Encoder	Back Stop
							d_{ML}	d_{ML}	d_{ML}	d_{ML}
BF50Z-../D..05.A.	170.5	155	123	503	101	117	545	605.5	643	-
BF50Z-../D..06.A.	170.5	155	123	503	99	119	545	605.5	643	-
BF50Z-../D..07.A.	190.5	155	123	523	99	119	565	625.5	663	-
BF50-../D..08.A.	199.5	73	156	450	114.5	136.5	516	562	623.5	516
BF50Z-../D..08.A.	199.5	159	156	536	114.5	136.5	602	648	709.5	602
BF50-../D..08.B.	229.5	73	156	480	114.5	136.5	546	592	653	546
BF50Z-../D..08.B.	229.5	159	156	566	114.5	136.5	632	678	739	632
BF50-../D..09.A.	250.5	87.5	176	515.5	124	157	608.5	623	712.5	608.5
BF50Z-../D..09.A.	250.5	173.5	176	601.5	124	157	694.5	709	798.5	694.5
BF50-../D..09.B.	308.5	87.5	176	573.5	124	157	666.5	680.5	770.5	666.5
BF50Z-../D..09.B.	308.5	173.5	176	659.5	124	157	752.5	766.5	856.5	752.5
BF50-../D..11.A.	319	94	218	590.5	165	176	688.5	698	790.5	688.5
BF50-../D..11.B.	387	94	218	658.5	165	176	754.5	766	858.5	754.5
BF50-../D..13.A.	393	107	258	677.5	217	217	788.5	784.5	889.5	785.5
BF50-../D..16.B.	454.5	121	310	753	243	243	896.5	860	1000	896.5
BF50-../D..18.B.	542	143	348	862.5	288	288	1012	968	1115.5	1012

Dimensions in millimetres (mm)

The actual gearbox design can vary from the geometry shown. Generate drive specific 3D and 2D geometries under www.BauerCat.com.

BF50-BF50Z

Flange with tapped holes
Code -7./

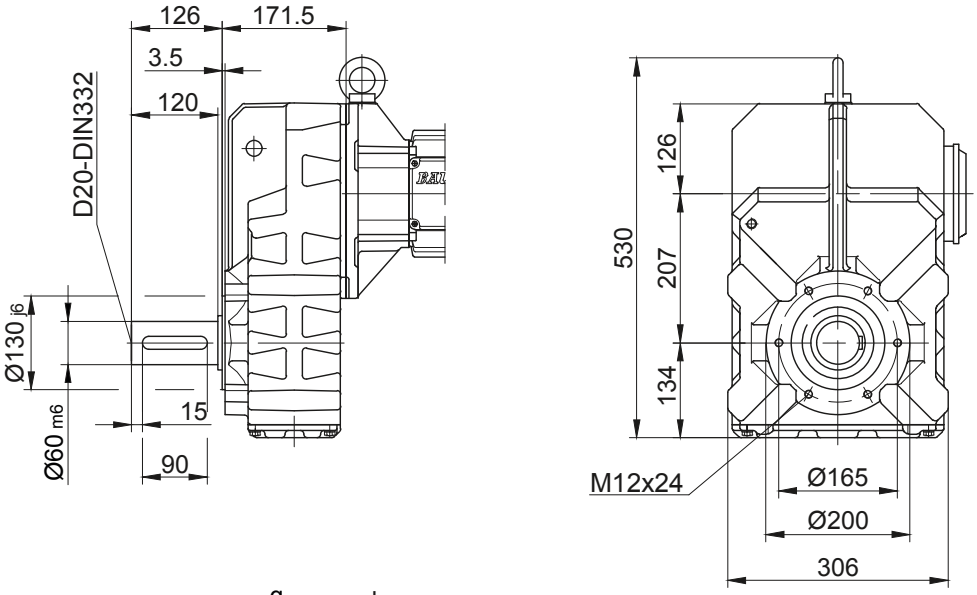

Flange with clearance holes
Code -3./
(Code -2./)

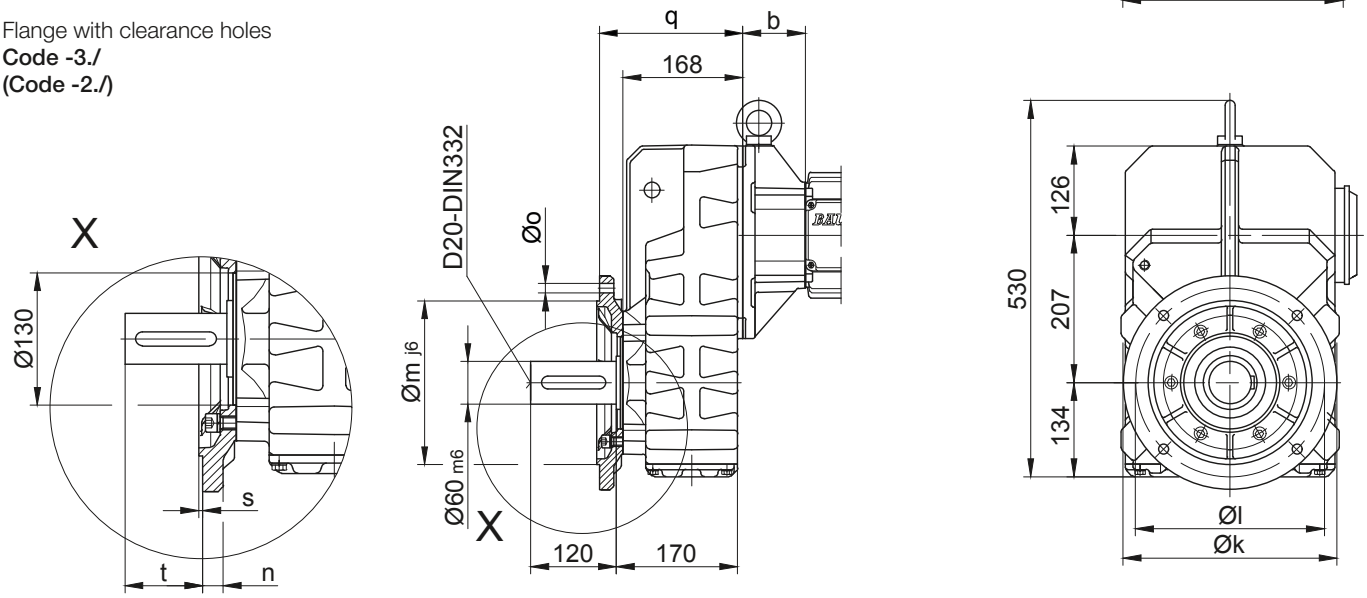

Flange Dimensions									
Type	Design	k	l	m	n	o	q	s	t
BF50..	Code -3./	300	265	230	20	13.5	201	4	96.5
BF50..	Code -2./	250	215	180	16	13.5	198	4	99.5
Dimensions in millimetres (mm)									

Foot with tapped holes left and right
Code -6.LR/

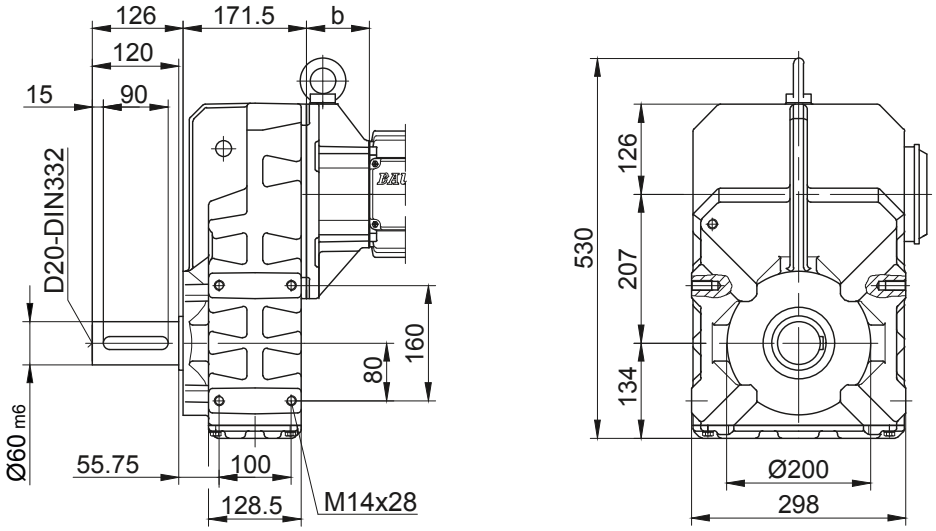

The actual gearbox design can vary from the geometry shown. Generate drive specific 3D and 2D geometries under www.BauerCat.com.

BF60-BF60Z
with torque arm
Code -0./

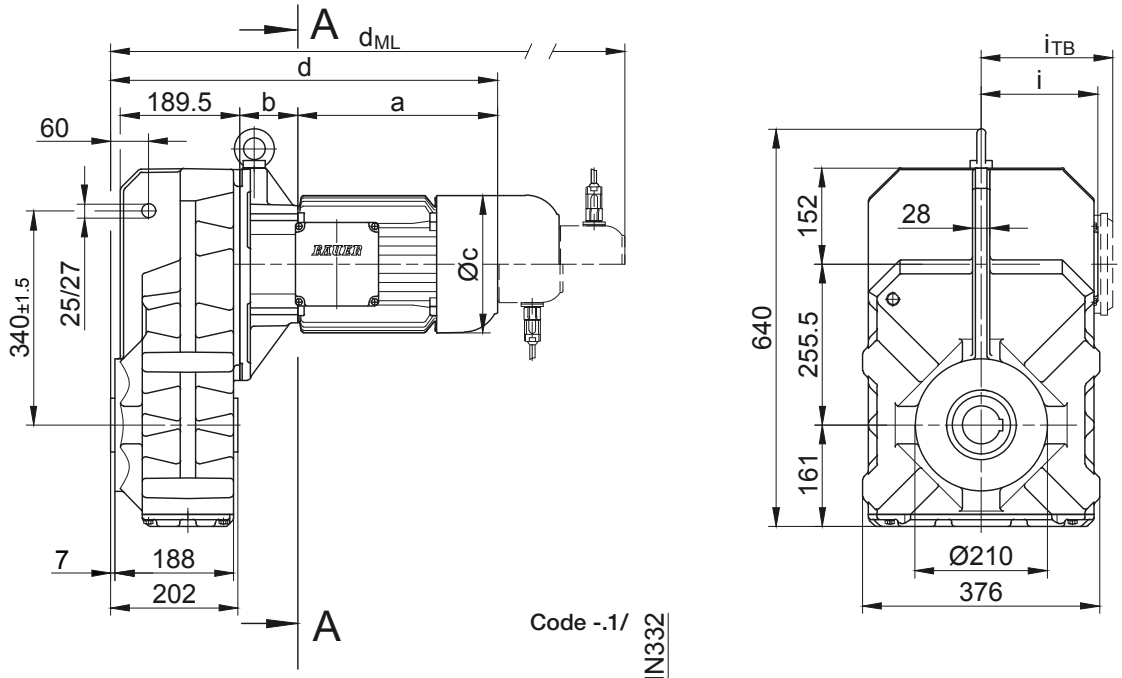

Code -.1/

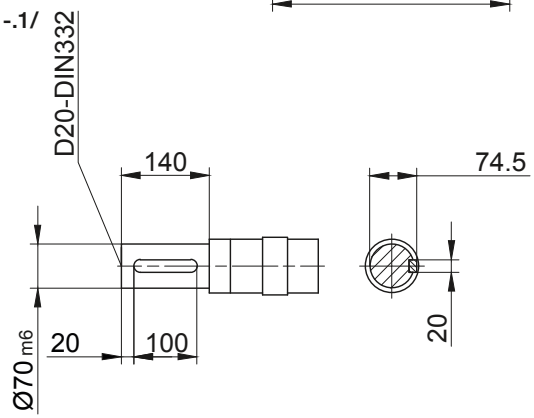

Code -.4/

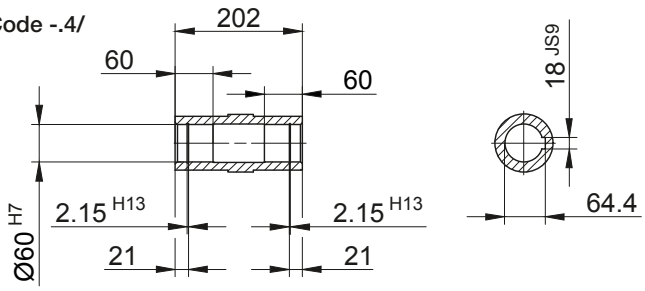

Code -.5/

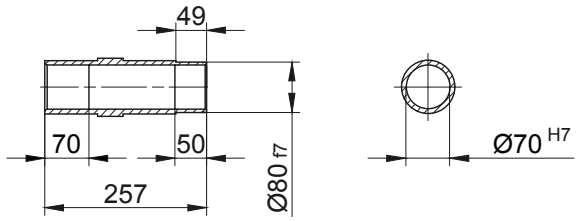

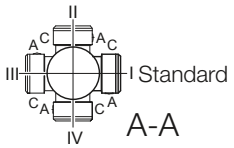

Type	a	b	c	d	i	Design with motor extensions				
						i_{TB}	Brake	Encoder	Brake with Encoder	Back Stop
							d_{ML}	d_{ML}	d_{ML}	d_{ML}
BF60Z-../D..08.A.	199.5	181	156	585.5	114.5	136.5	651.5	697.5	759	651.5
BF60Z-../D..08.B.	229.5	181	156	615.5	114.5	136.5	681.5	727.5	788.5	681.5
BF60-../D..09.A.	250.5	85.5	176	541	124	157	634	648.5	738	634
BF60Z-../D..09.A.	250.5	195.5	176	651	124	157	744	758.5	848	744
BF60-../D..09.B.	308.5	85.5	176	599	124	157	692	706	796	692
BF60Z-../D..09.B.	308.5	195.5	176	709	124	157	802	816	906	802
BF60-../D..11.A.	319	92	218	616	165	176	714	723.5	816	714
BF60Z-../D..11.A.	319	202	218	726	165	176	824	833.5	926	824
BF60-../D..11.B.	387	92	218	684	165	176	780	791.5	884	780
BF60Z-../D..11.B.	387	202	218	794	165	176	890	901.5	994	890
BF60-../D..13.A.	393	105	258	703	217	217	814	810	915	811
BF60-../D..16.B.	454.5	119	310	778.5	243	243	922	885.5	1025.5	922
BF60-../D..18.B.	542	141	348	888	288	288	1037.5	993.5	1141	1037.5

Dimensions in millimetres (mm)

The actual gearbox design can vary from the geometry shown. Generate drive specific 3D and 2D geometries under www.BauerCat.com.

BF60-BF60Z

Flange with tapped holes
Code -7./

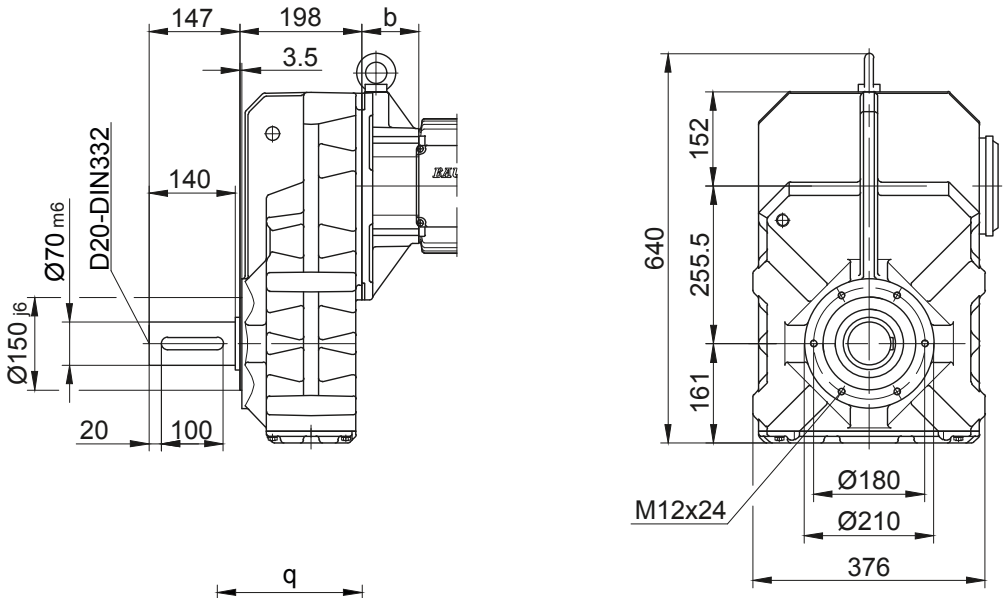

Flange with clearance holes
Code -3./
(Code -2./)

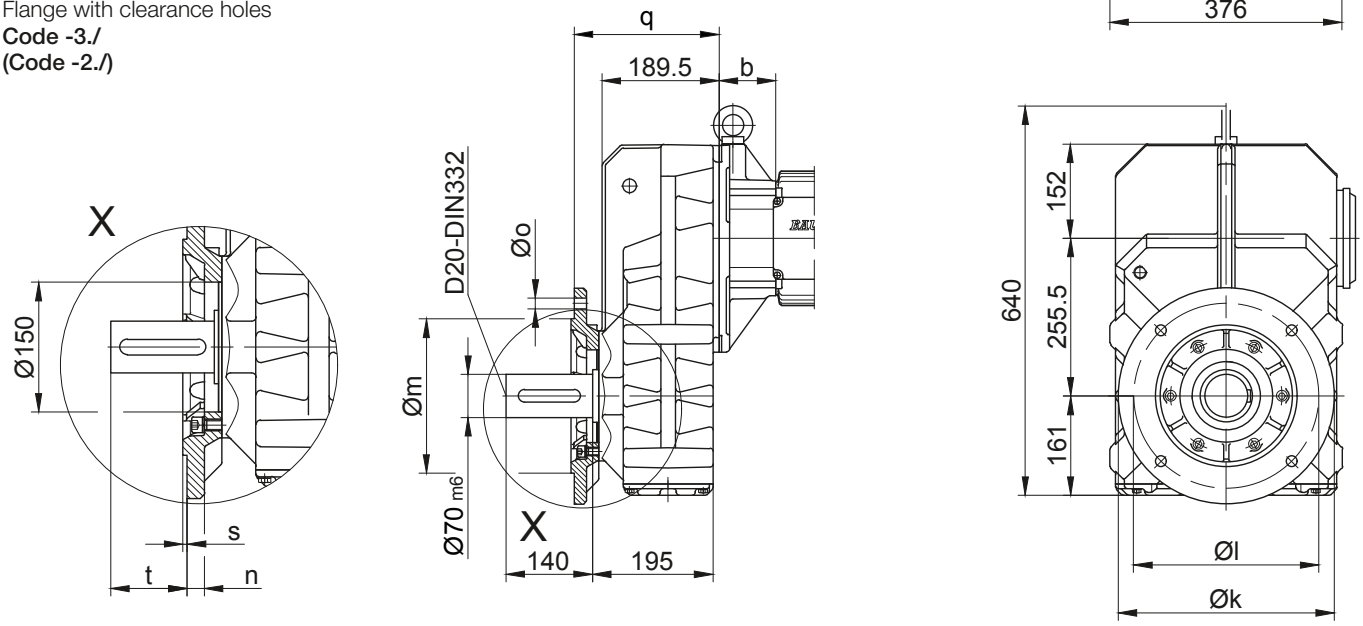

Flange Dimensions									
Type	Design	k	l	m	n	o	q	s	t
BF60..	Code -3./	350	300	250	20	17.5	234.5	5	110.5
BF60..	Code -2./	300	265	230	20	13.5	242.5	4	102.5
Dimensions in millimetres (mm)									

Foot with tapped holes left and right
Code -6.LR/

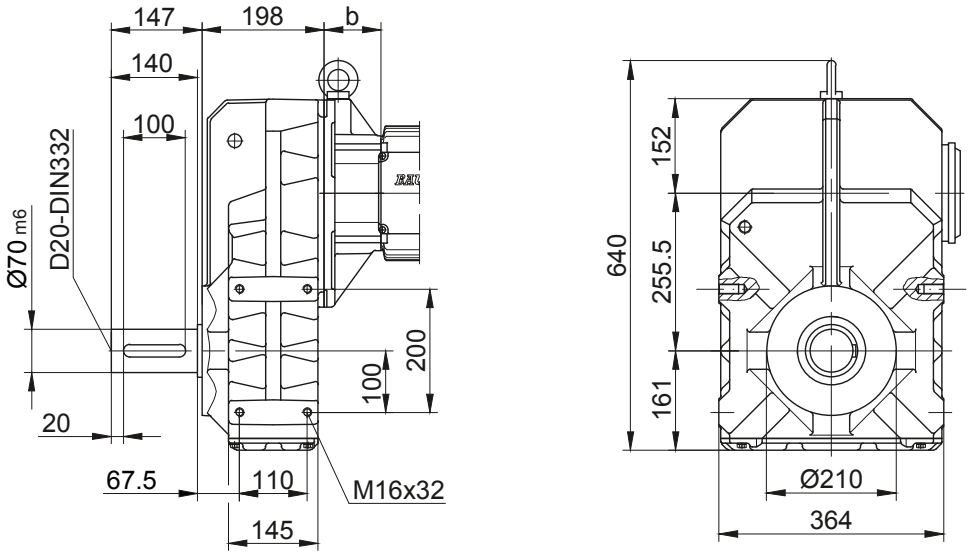

The actual gearbox design can vary from the geometry shown. Generate drive specific 3D and 2D geometries under www.BauerCat.com.

Dimension - Standard

BF70-BF70Z
with torque arm
Code -0./

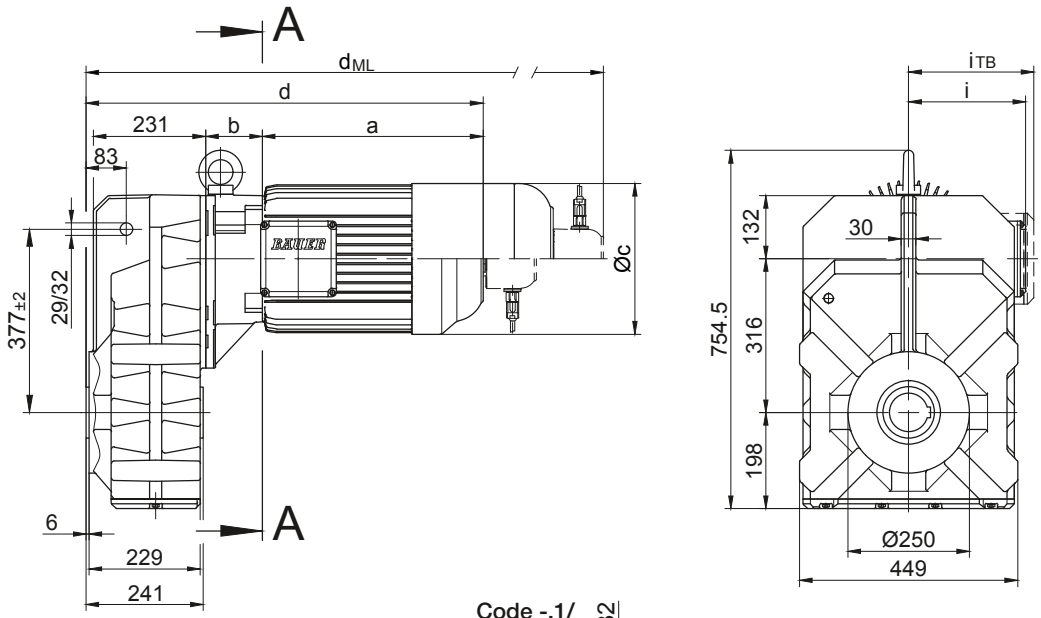

Code -.1/

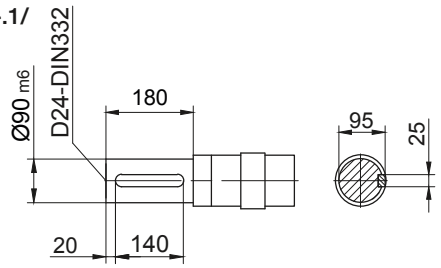

Code -.4/

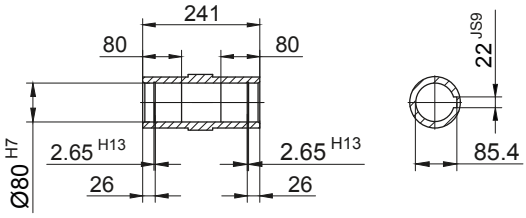

Code -.5/

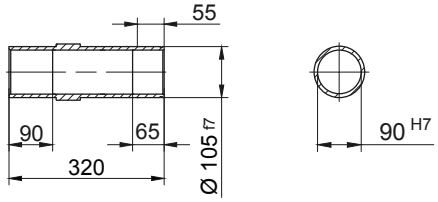

Code -.4/K70

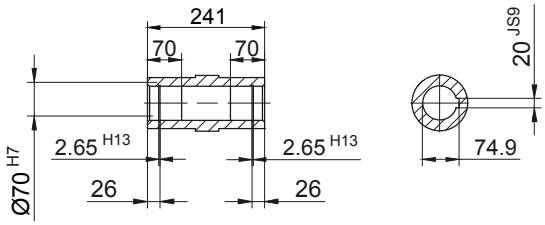

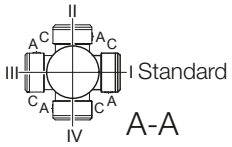

Type	a	b	c	d	i	Design with motor extensions				
						i_{TB}	Brake	Encoder	Brake with Encoder	Back Stop
							d_{ML}	d_{ML}	d_{ML}	d_{ML}
BF70Z-../D..08.A.	199.5	202	156	647.5	114.5	136.5	713.5	759.5	821	713.5
BF70Z-../D..08.B.	229.5	202	156	677.5	114.5	136.5	743.5	789.5	850.5	743.5
BF70-../D..09.A.	250.5	83.5	176	580	124	157	673	687.5	777	673
BF70Z-../D..09.A.	250.5	216.5	176	713	124	157	806	820.5	910	806
BF70-../D..09.B.	308.5	83.5	176	638	124	157	731	745	835	731
BF70Z-../D..09.B.	308.5	216.5	176	771	124	157	864	878	968	864
BF70-../D..11.A.	319	90	218	655	165	176	753	762.5	855	753
BF70Z-../D..11.A.	319	223	218	788	165	176	886	895.5	988	886
BF70-../D..11.B.	387	90	218	723	165	176	819	830.5	923	819
BF70Z-../D..11.B.	387	223	218	856	165	176	952	963.5	1056	952
BF70-../D..13.A.	393	103	258	742	217	217	853	849	954	850
BF70Z-../D..13.A.	393	236	258	875	217	217	986	982	1087	983
BF70-../D..16.B.	454.5	117	310	817.5	243	243	961	924.5	1064.5	961
BF70Z-../D..16.B.	454.5	250	310	950.5	243	243	1094	1057.5	1197.5	1094
BF70-../D..18.B.	542	139	348	927	288	288	1076.5	1032.5	1180	1076.5
BF70Z-../D..18.B.	542	272	348	1060	288	288	1209.5	1165.5	1313	1209.5
BF70-../D..20.A.	703.5	156	363	1105.5	302	302	1233	1211	1338.5	1105.5
BF70-../D..22.A.	703.5	156	363	1105.5	302	302	1233	1211	1338.5	1105.5

Dimensions in millimetres (mm)

The actual gearbox design can vary from the geometry shown. Generate drive specific 3D and 2D geometries under www.BauerCat.com.

BF70-BF70Z

Flange with tapped holes
Code -7./

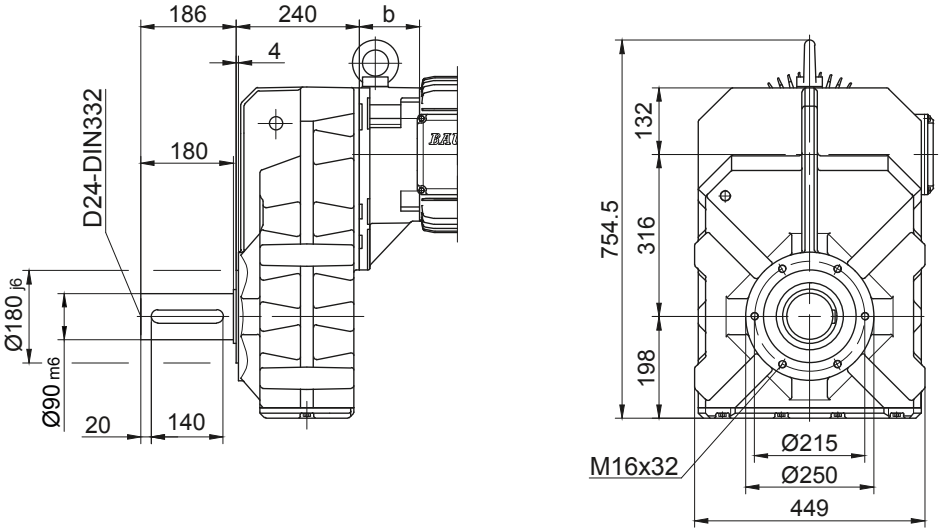

Flange with clearance holes
Code -3./
(Code -2./)
(Code -4./)

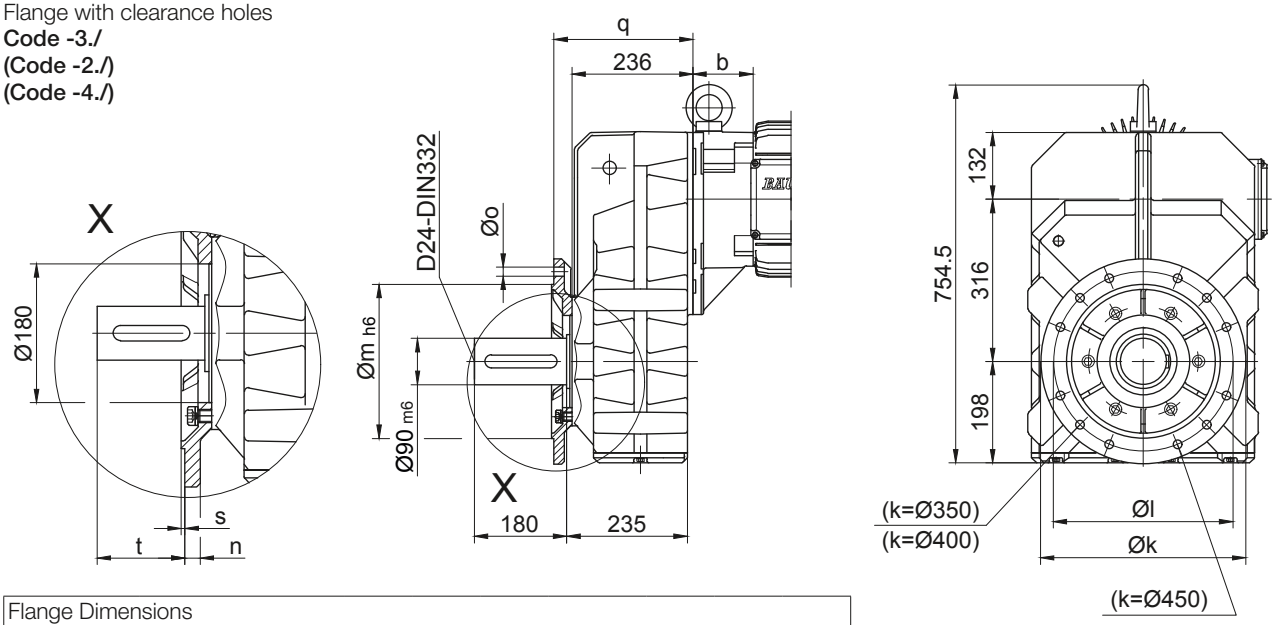

Flange Dimensions									
Type	Design	k	l	m	n	o	q	s	t
BF70..	Code -3./	400	350	300	20	4 x 17.5	271	5	155
BF70..	Code -2./	350	300	250	20	4 x 17.5	271	5	155
BF70..	Code -4./	450	400	350	22	8 x 17.5	281	5	145
Dimensions in millimetres (mm)									

Foot with tapped holes left and right
Code -6.LR/

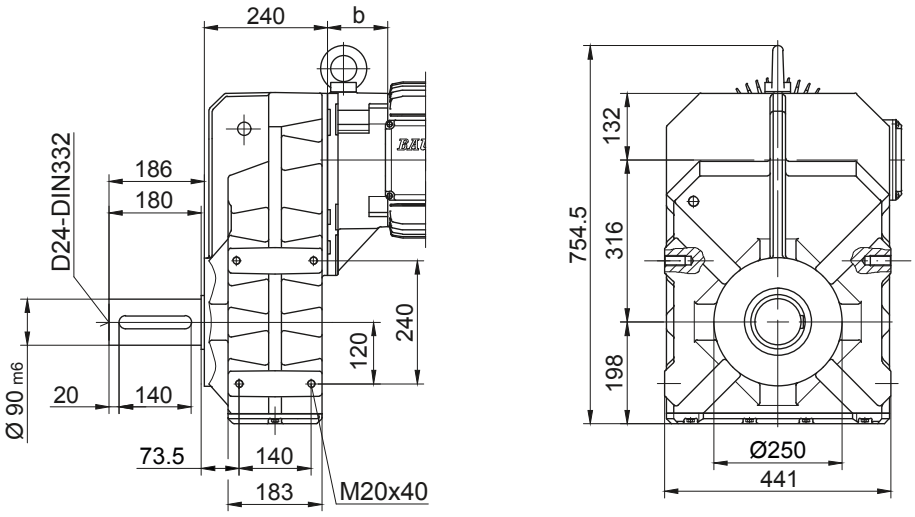

The actual gearbox design can vary from the geometry shown. Generate drive specific 3D and 2D geometries under www.BauerCat.com.

BF-series shaft-mounted geared motors

Dimension - Standard

BF80-BF80Z
with torque arm
Code -0./

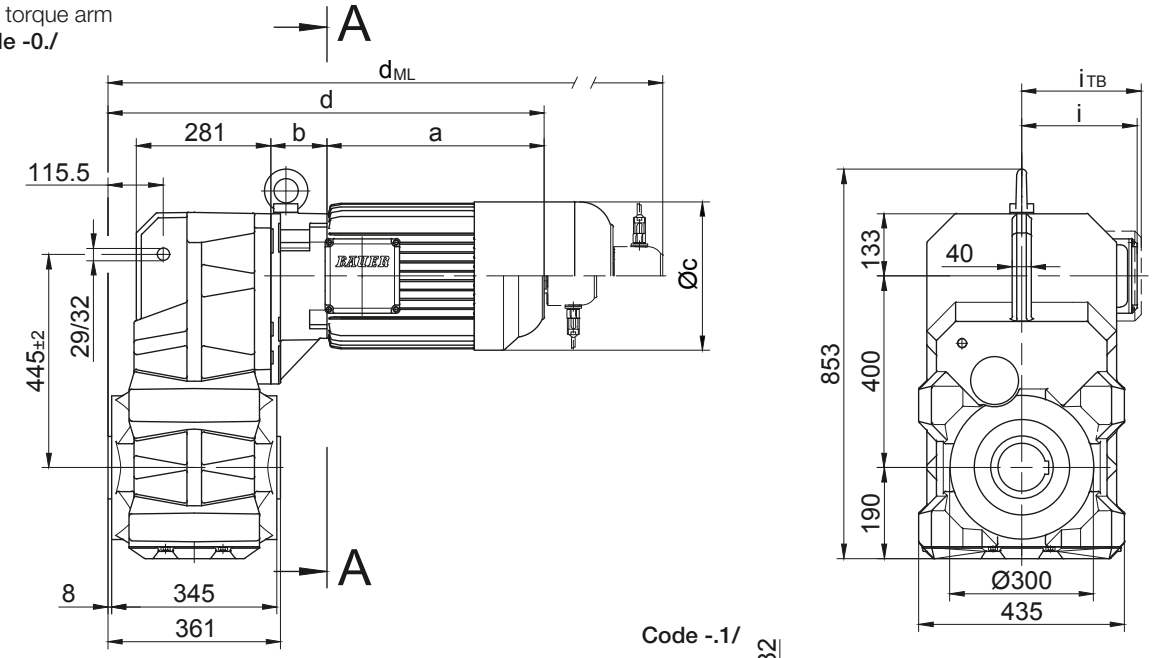

Code -.1/

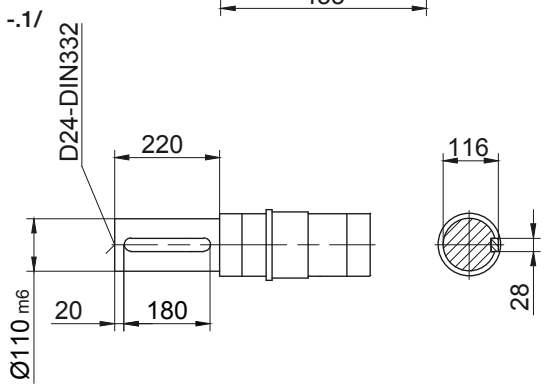

Code -.4/

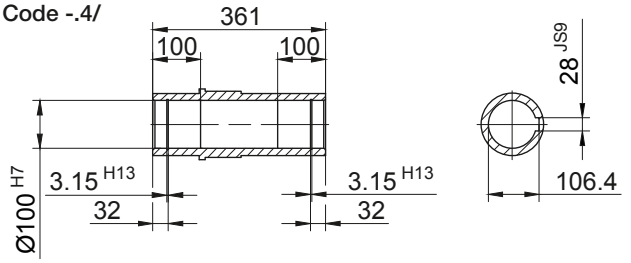

Code -.5/

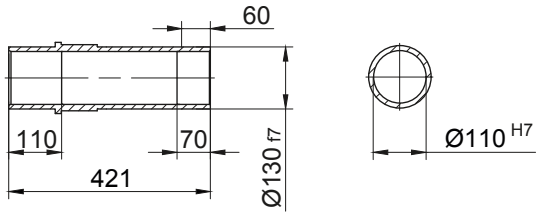

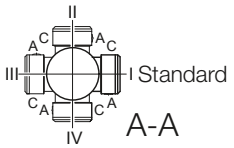

Type	a	b	c	d	i	Design with motor extensions				
						i_{TB}	Brake	Encoder	Brake with Encoder	Back Stop
							d_{ML}	d_{ML}	d_{ML}	d_{ML}
BF80Z-../D..08.A.	199.5	202	156	742	114.5	136.5	808	854	915.5	808
BF80-../D..09.A.	250.5	83.5	176	674.5	124	157	767.5	782	871.5	767.5
BF80Z-../D..09.A.	250.5	216.5	176	807.5	124	157	900.5	915	1004.5	900.5
BF80-../D..09.B.	308.5	83.5	176	732.5	124	157	825.5	839.5	929.5	825.5
BF80Z-../D..09.B.	308.5	216.5	176	865.5	124	157	958.5	972.5	1062.5	958.5
BF80-../D..11.A.	319	90	218	749.5	165	176	847.5	857	949.5	847.5
BF80Z-../D..11.A.	319	223	218	882.5	165	176	980.5	990	1082.5	980.5
BF80-../D..11.B.	387	90	218	817.5	165	176	913.5	925	1017.5	913.5
BF80Z-../D..11.B.	387	223	218	950.5	165	176	1046.5	1058	1150.5	1046.5
BF80-../D..13.A.	393	103	258	836.5	217	217	947.5	943.5	1048.5	944.5
BF80Z-../D..13.A.	393	236	258	969.5	217	217	1080.5	1076.5	1181.5	1077.5
BF80-../D..16.B.	454.5	117	310	912	243	243	1055.5	1019	1159	1055.5
BF80Z-../D..16.B.	454.5	250	310	1045	243	243	1188.5	1152	1292	1188.5
BF80-../D..18.B.	542	139	348	1021.5	288	288	1171	1127	1274.5	1171
BF80Z-../D..18.B.	542	272	348	1154.5	288	288	1304	1260	1407.5	1304
BF80-../D..20.A.	703.5	156	363	1200	302	302	1327.5	1305.5	1433	1200
BF80-../D..22.A.	703.5	156	363	1200	302	302	1327.5	1305.5	1433	1200

Dimensions in millimetres (mm)

The actual gearbox design can vary from the geometry shown. Generate drive specific 3D and 2D geometries under www.BauerCat.com.

BF80-BF80Z

Flange with tapped holes
Code -7./

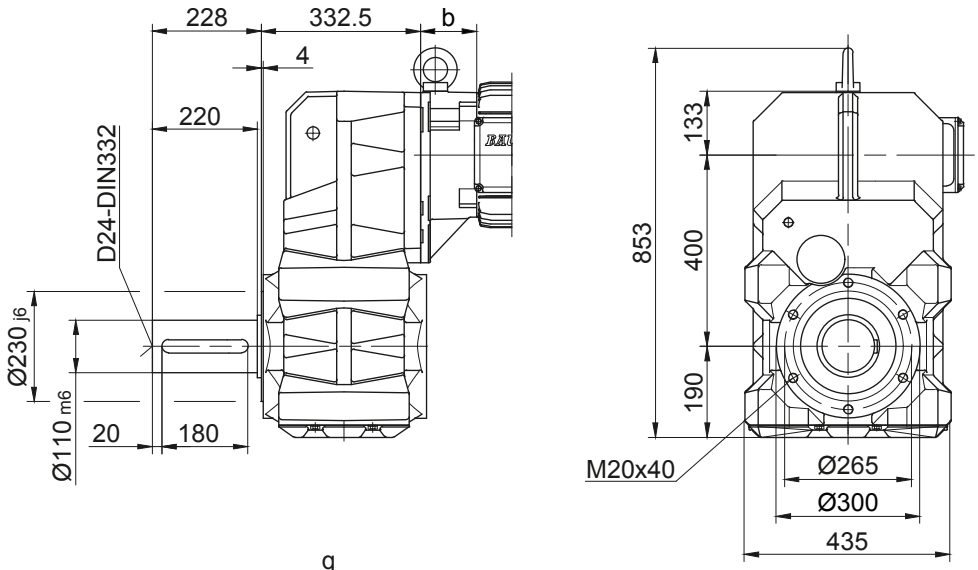

Flange with clearance holes
Code -3./
(Code -4./)

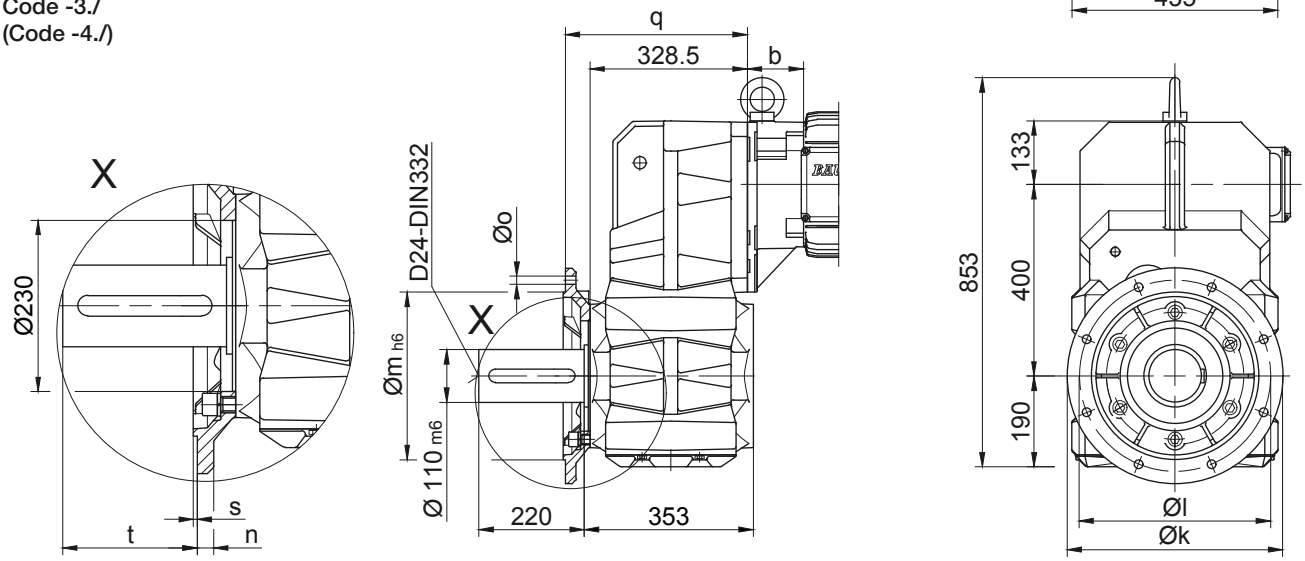

Flange Dimensions									
Type	Design	k	l	m	n	o	q	s	t
BF80..	Code -3./	450	400	350	22	17.5	383.5	5	177
BF80..	Code -4./	550	500	450	22	17.5	388.5	5	172
Dimensions in millimetres (mm)									

Foot with clearance holes left and right
Code -1.LR/

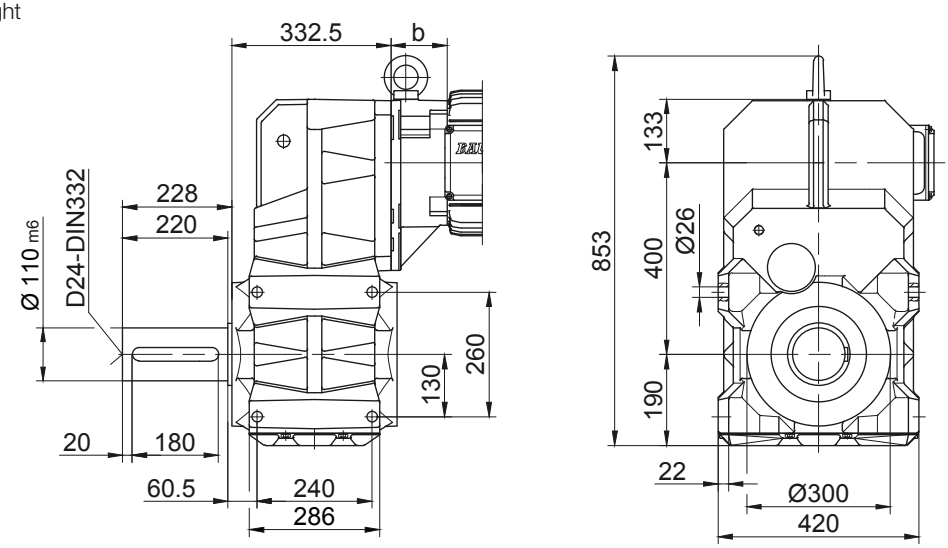

The actual gearbox design can vary from the geometry shown. Generate drive specific 3D and 2D geometries under www.BauerCat.com.

BF90-BF90Z

with torque arm

Code -0./

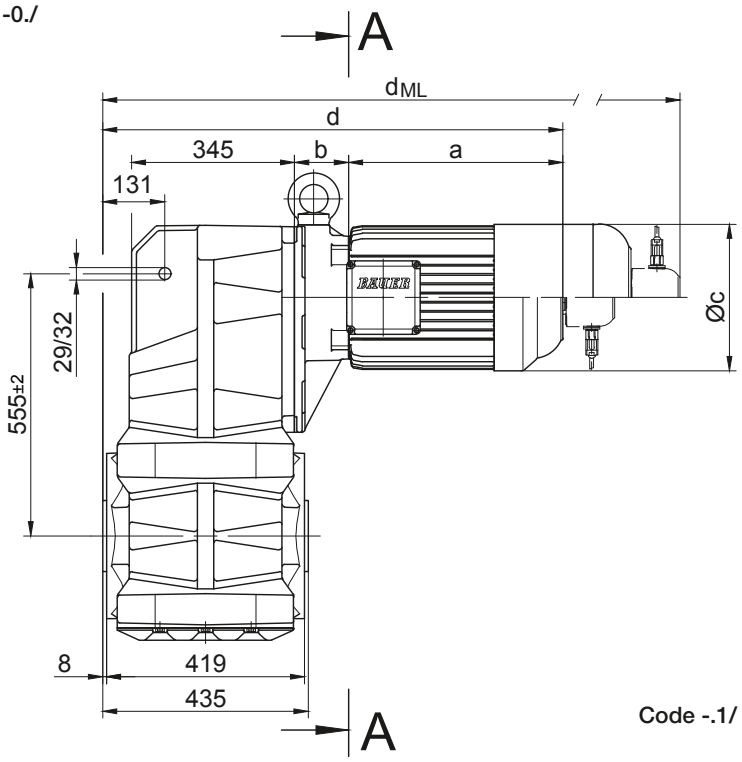

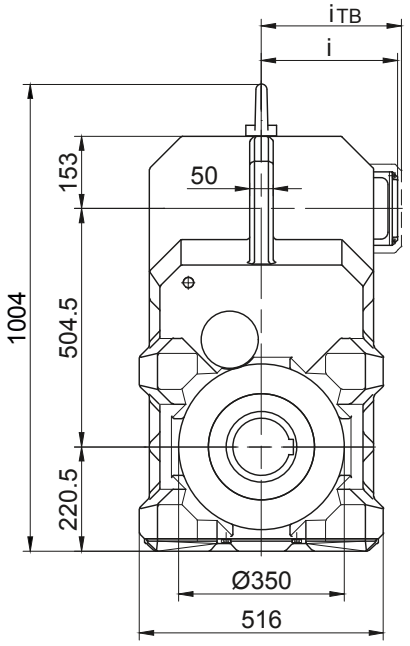

Code -.1/

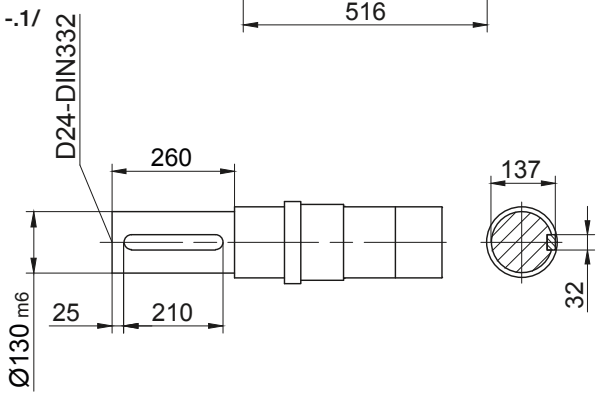

Code -.4/

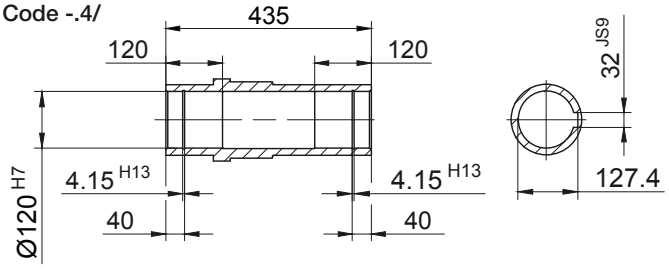

Code -.5/

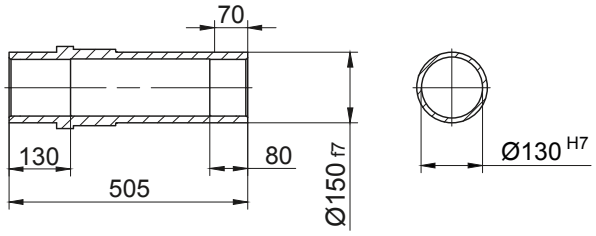

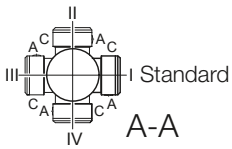

Type	a	b	c	d	i	Design with motor extensions				
						i_{TB}	Brake	Encoder	Brake with Encoder	Back Stop
							d_{ML}	d_{ML}	d_{ML}	d_{ML}
BF90Z-../D..09.A.	250.5	252.5	176	909	124	157	1002	1016.5	1106	1002
BF90Z-../D..09.B.	308.5	252.5	176	967	124	157	1060	1074	1164	1060
BF90-../D..11.A.	319	87	218	812	165	176	910	919.5	1012	910
BF90Z-../D..11.A.	319	259	218	984	165	176	1082	1091.5	1184	1082
BF90-../D..11.B.	387	87	218	880	165	176	976	987.5	1080	976
BF90Z-../D..11.B.	387	259	218	1052	165	176	1148	1159.5	1252	1148
BF90-../D..13.A.	393	100	258	899	217	217	1010	1006	1111	1007
BF90Z-../D..13.A.	393	272	258	1071	217	217	1182	1178	1283	1179
BF90-../D..16.B.	454.5	114	310	974.5	243	243	1118	1081.5	1221.5	1118
BF90Z-../D..16.B.	454.5	286	310	1146.5	243	243	1290	1253.5	1393.5	1290
BF90-../D..18.B.	542	136	348	1084	288	288	1233.5	1189.5	1337	1233.5
BF90Z-../D..18.B.	542	308	348	1256	288	288	1405.5	1361.5	1509	1405.5
BF90-../D..20.A.	703.5	153	363	1262.5	302	302	1390	1368	1495.5	1262.5
BF90-../D..22.A.	703.5	153	363	1262.5	302	302	1390	1368	1495.5	1262.5

Dimensions in millimetres (mm)

The actual gearbox design can vary from the geometry shown. Generate drive specific 3D and 2D geometries under www.BauerCat.com.

BF90-BF90Z

Flange with tapped holes
Code -7./

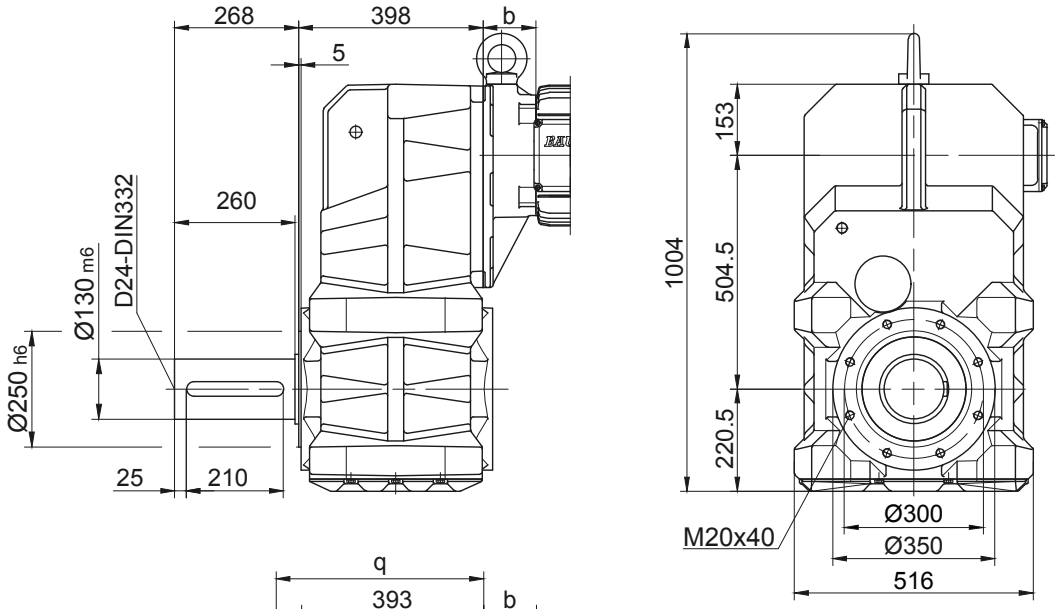

Flange with clearance holes
Code -3./
(Code -4./)

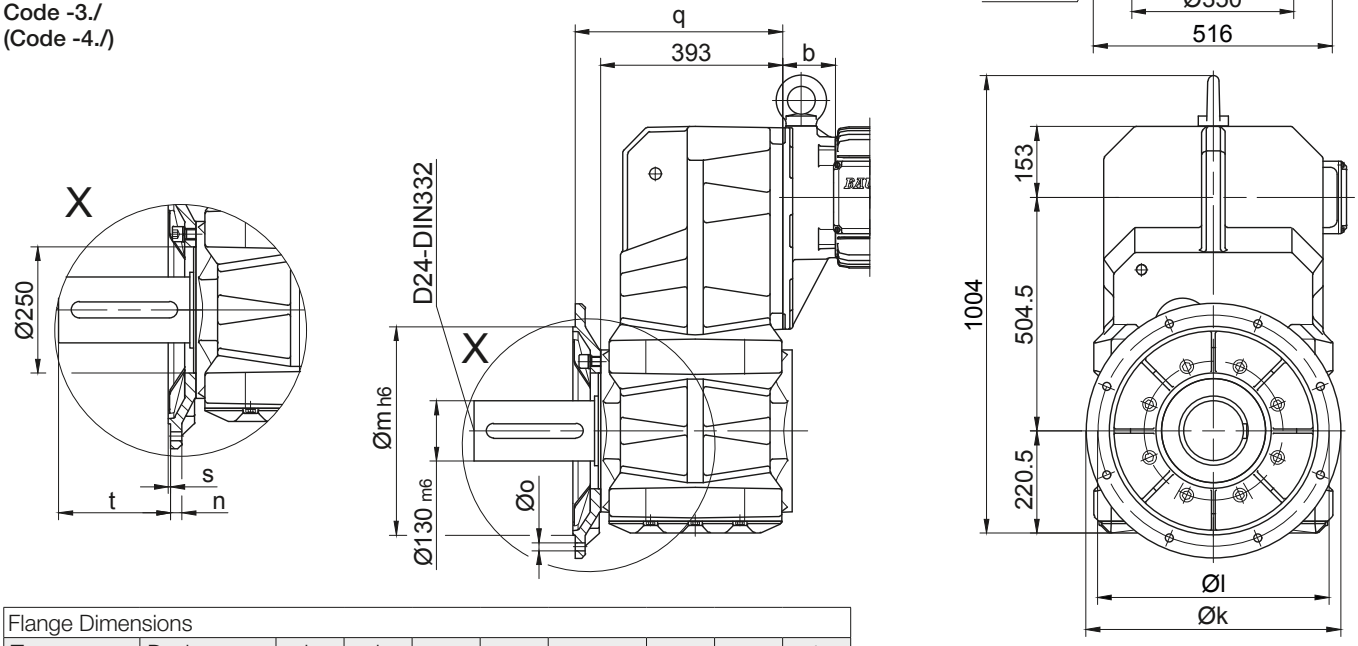

Flange Dimensions									
Type	Design	k	l	m	n	o	q	s	t
BF90..	Code -3./	550	500	450	22	17.5	448	5	218
BF90..	Code -4./	660	600	550	25	22	442	6	224
Dimensions in millimetres (mm)									

Foot with clearance holes left and right
Code -1.LR/

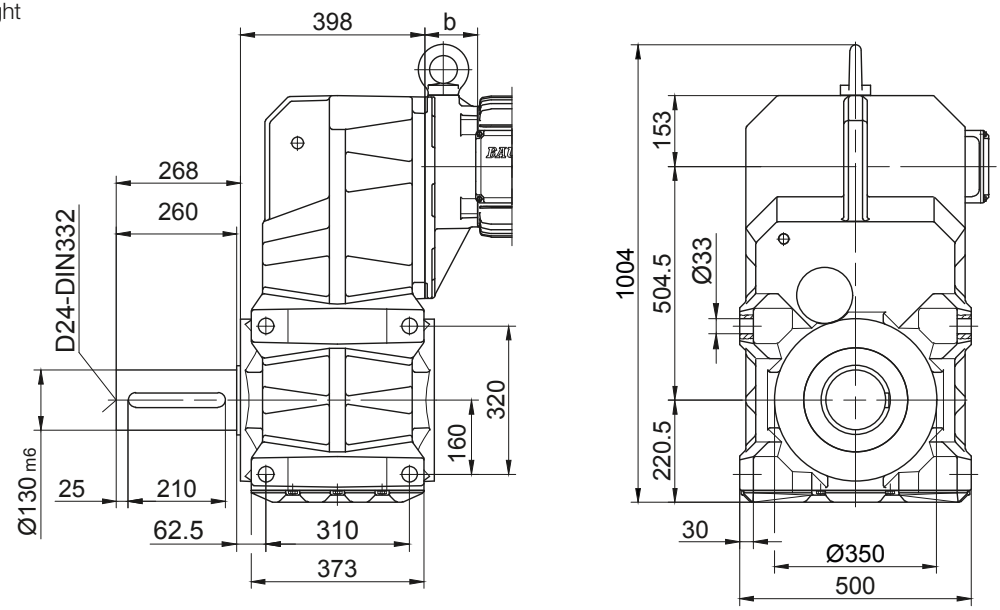

The actual gearbox design can vary from the geometry shown. Generate drive specific 3D and 2D geometries under www.BauerCat.com.

Dimension - Tandem Gearbox

BF10G06
with torque arm
Code -0./

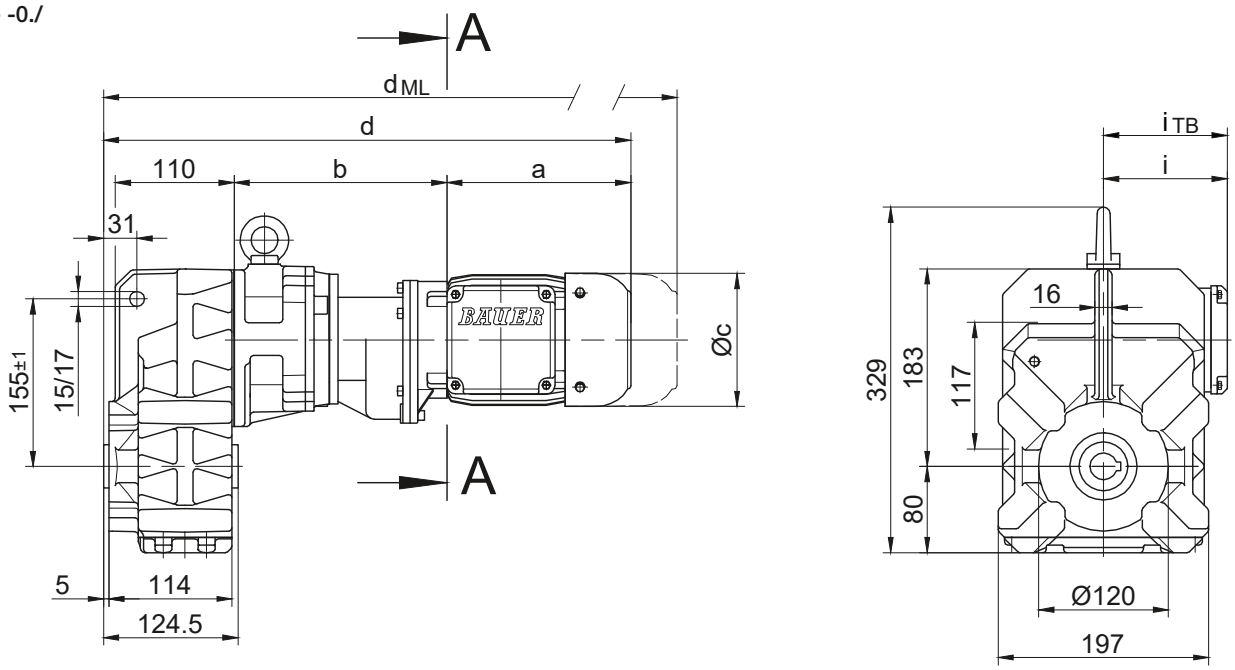

Code -.1/

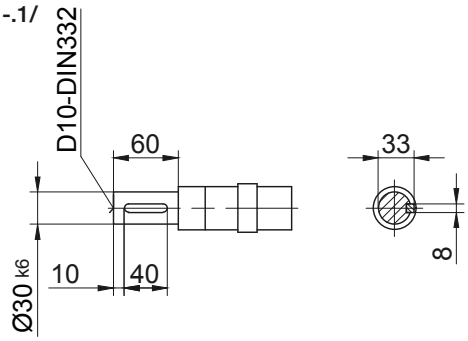

Code -.4/

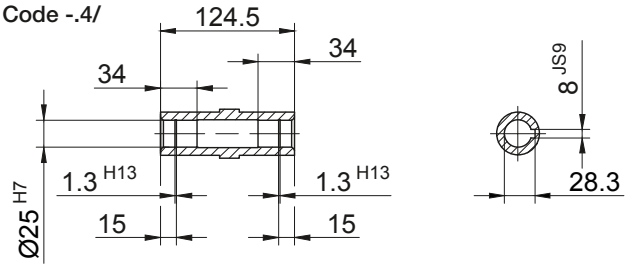

Code -.5/

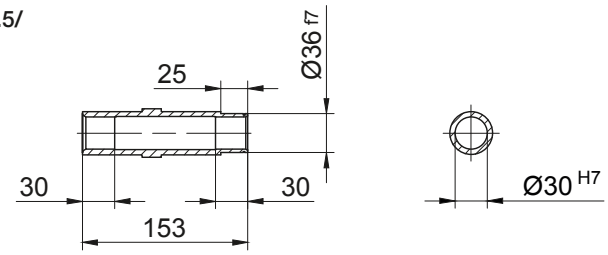

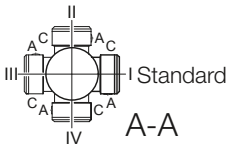

Type	a	b	c	d	i	Design with motor extensions				
						i_{TB}	Brake	Encoder	Brake with Encoder	Back Stop
							d_{ML}	d_{ML}	d_{ML}	d_{ML}
BF10G06-../D04.A.	142.5	195	110.5	458.5	90	112	502	546	589.5	-
BF10G06-../D..05.A.	170.5	197	123	488.5	101	117	530.5	591	628.5	-
BF10G06-../D..06.A.	170.5	197	123	488.5	99	119	530.5	591	628.5	-
BF10G06-../D..07.A.	190.5	197	123	508.5	99	119	550.5	611	648.5	-
BF10G06-../D..08.A.	199.5	241	156	561.5	114.5	136.5	627.5	673.5	735	627.5
BF10G06-../D..08.B.	229.5	241	156	591.5	114.5	136.5	657.5	703.5	764.5	657.5

Dimensions in millimetres (mm)

The actual gearbox design can vary from the geometry shown. Generate drive specific 3D and 2D geometries under www.BauerCat.com.

BF10G06

Flange with tapped holes
Code -7./

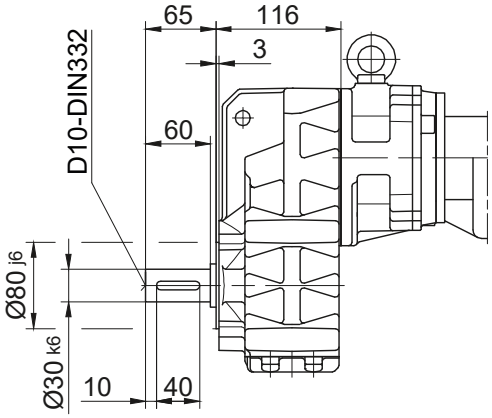

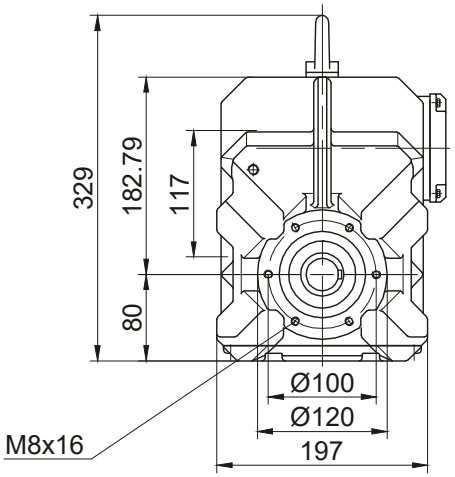

Flange with clearance holes
Code -3./
(Code -2./)

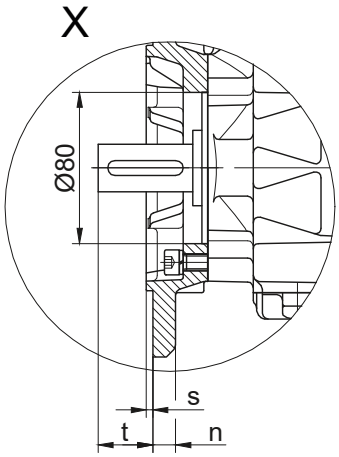

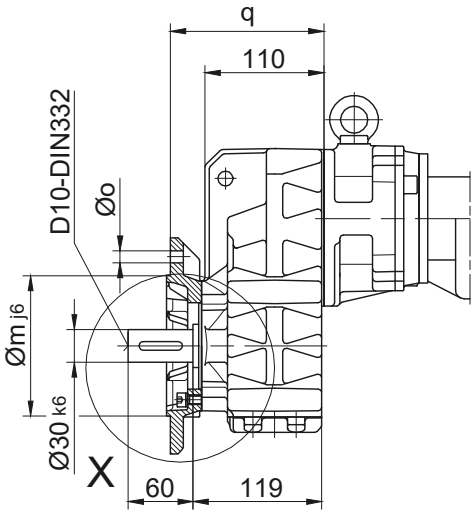

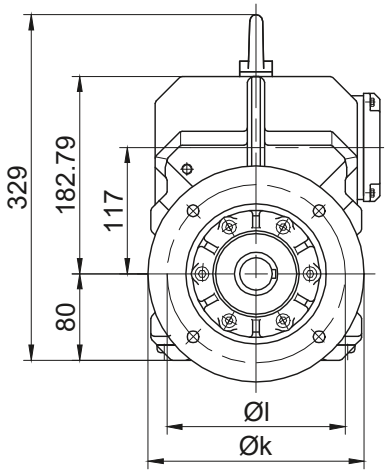

Flange Dimensions									
Type	Design	k	l	m	n	o	q	s	t
BF10..	Code -3./	200	165	130	12	11	142	3.5	39
BF10..	Code -2./	160	130	110	10	9	135	3.5	46
Dimensions in millimetres (mm)									

Foot with tapped holes left and right
Code -6.LR/

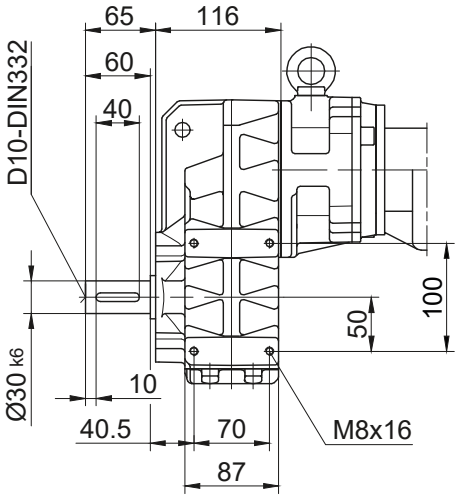

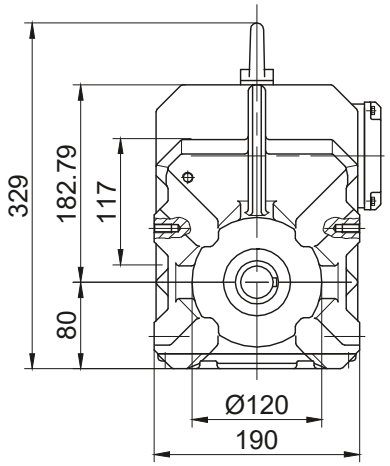

The actual gearbox design can vary from the geometry shown. Generate drive specific 3D and 2D geometries under www.BauerCat.com.

BF20G06

with torque arm

Code -0./

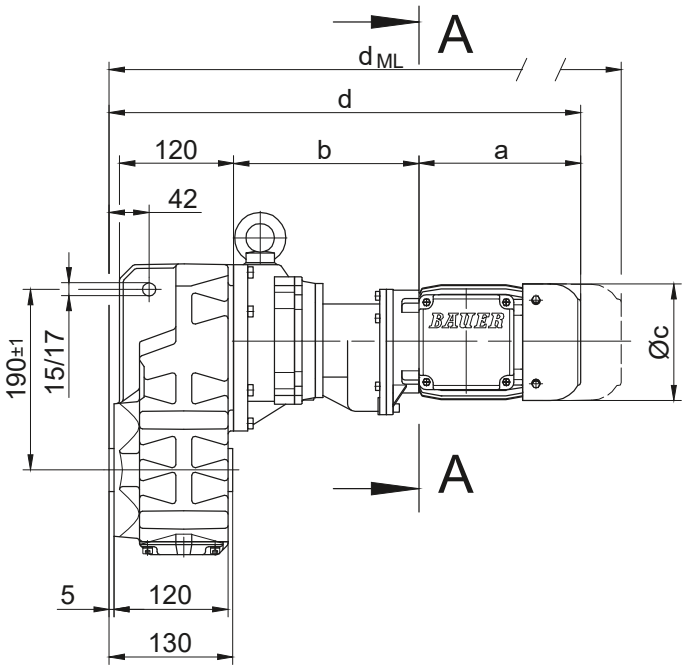

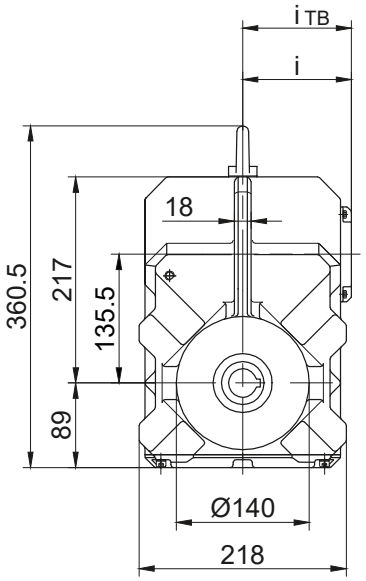

Code -.1/

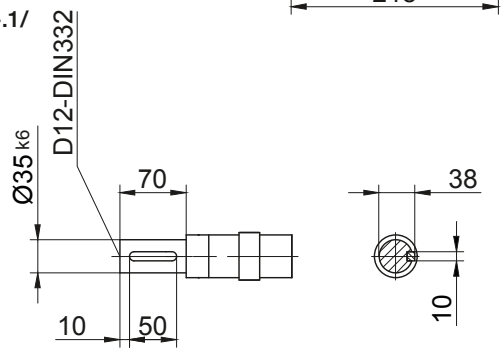

Code -.4/

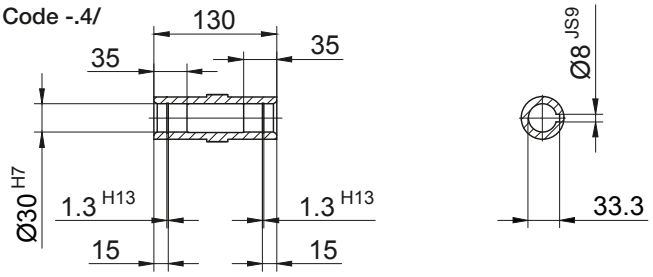

Code -.5/

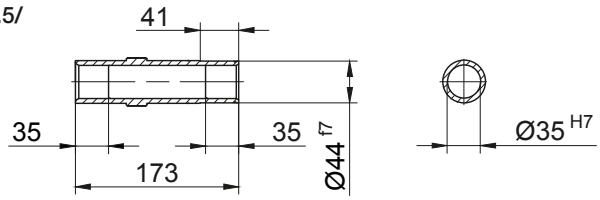

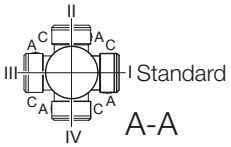

Type	a	b	c	d	i	Design with motor extensions				
						i_{TB}	Brake	Encoder	Brake with Encoder	Back Stop
							d_{ML}	d_{ML}	d_{ML}	d_{ML}
BF20G06-../D04.A.	142.5	193	110.5	466.5	90	112	510	554	597.5	-
BF20G06-../D..05.A.	170.5	195	123	496.5	101	117	538.5	599	636.5	-
BF20G06-../D..06.A.	170.5	195	123	496.5	99	119	538.5	599	636.5	-
BF20G06-../D..07.A.	190.5	195	123	516.5	99	119	558.5	619	656.5	-
BF20G06-../D..08.A.	199.5	239	156	569.5	114.5	136.5	635.5	681.5	743	635.5
BF20G06-../D..08.B.	229.5	239	156	599.5	114.5	136.5	665.5	711.5	772.5	665.5

Dimensions in millimetres (mm)

The actual gearbox design can vary from the geometry shown. Generate drive specific 3D and 2D geometries under www.BauerCat.com.

BF20G06

Flange with tapped holes
Code -7./

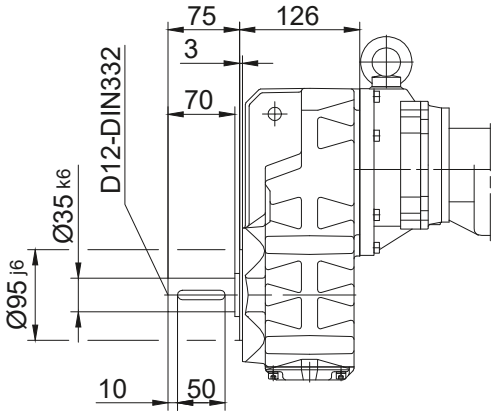

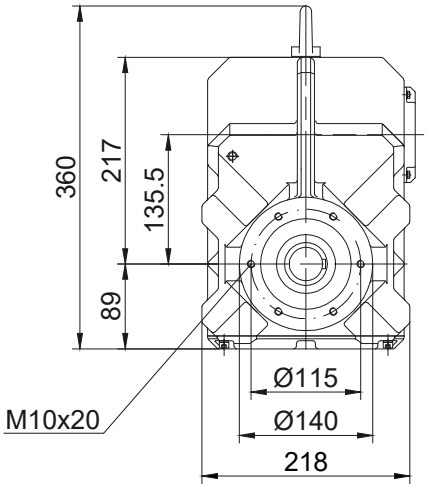

Flange with clearance holes
Code -3./
(Code -2./)

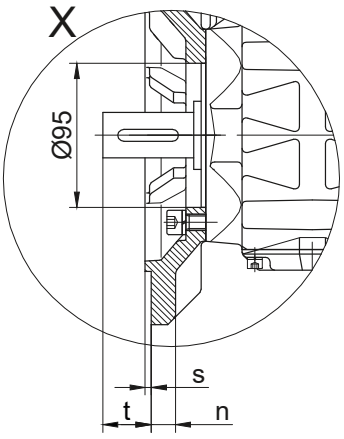

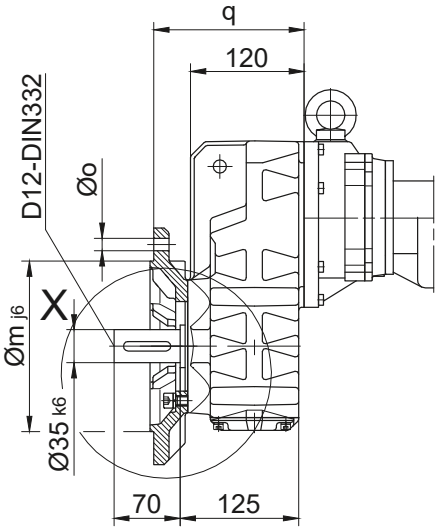

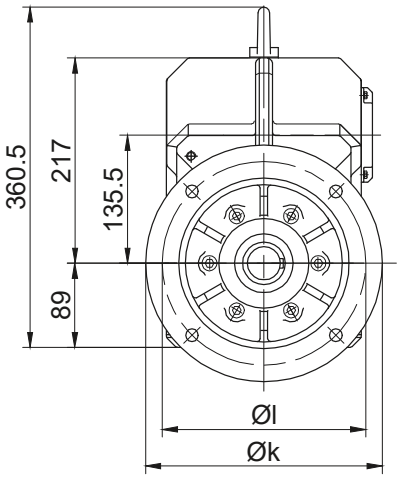

Flange Dimensions									
Type	Design	k	l	m	n	o	q	s	t
BF20..	Code -3./	250	215	180	16	13.5	159	4	42
BF20..	Code -2./	200	165	130	12	11	150	3.5	51
Dimensions in millimetres (mm)									

Foot with tapped holes left and right
Code -6.LR/

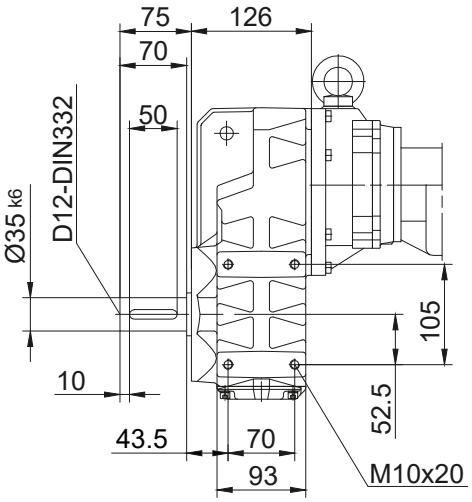

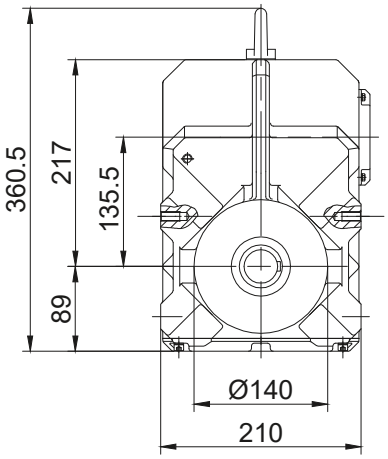

The actual gearbox design can vary from the geometry shown. Generate drive specific 3D and 2D geometries under www.BauerCat.com.

Dimension - Tandem Gearbox

BF30G06
with torque arm
Code -0./

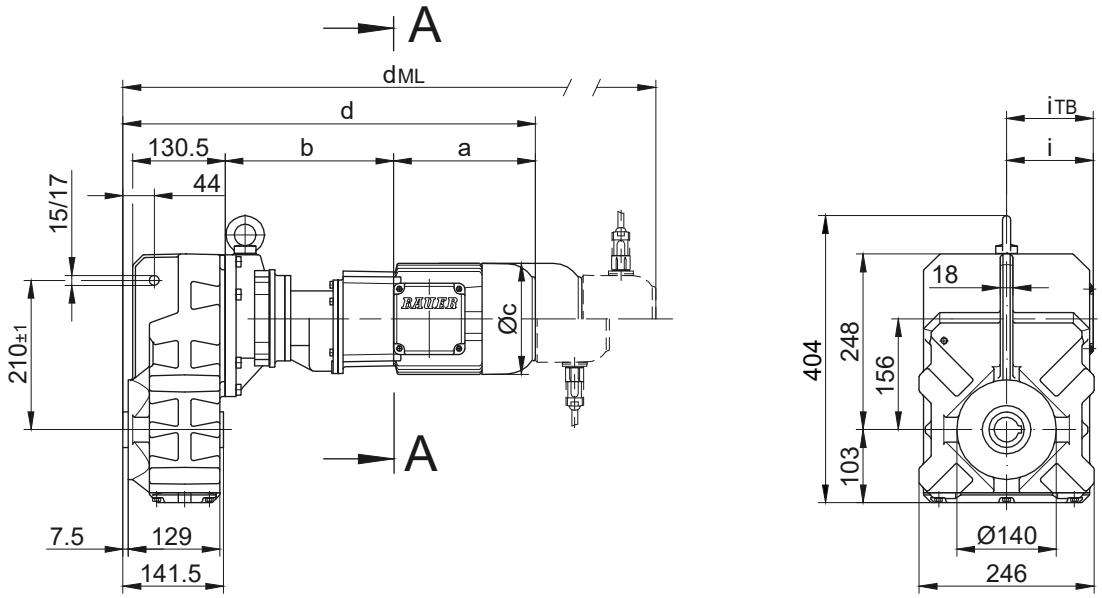

Code -.1/

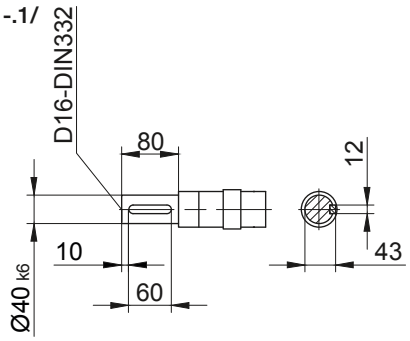

Code -.4/

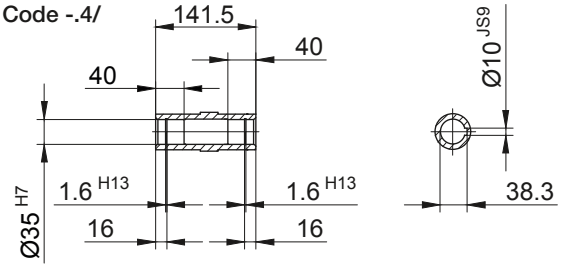

Code -.5/

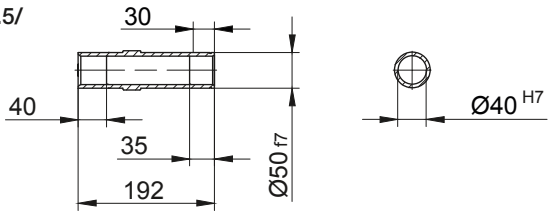

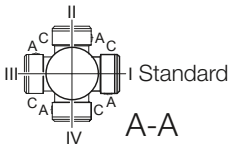

Type	a	b	c	d	i	Design with motor extensions				
						i_{TB}	Brake	Encoder	Brake with Encoder	Back Stop
							d_{ML}	d_{ML}	d_{ML}	d_{ML}
BF30G06-../D04.A.	142.5	191	110.5	477.5	90	112	521	565	608.5	-
BF30G06-../D..05.A.	170.5	193	123	507.5	101	117	549.5	610	647.5	-
BF30G06-../D..06.A.	170.5	193	123	507.5	99	119	549.5	610	647.5	-
BF30G06-../D..07.A.	190.5	193	123	527.5	99	119	569.5	630	667.5	-
BF30G06-../D..08.A.	199.5	237	156	580.5	114.5	136.5	646.5	692.5	754	646.5
BF30G06-../D..08.B.	229.5	237	156	610.5	114.5	136.5	676.5	722.5	783.5	676.5

Dimensions in millimetres (mm)

The actual gearbox design can vary from the geometry shown. Generate drive specific 3D and 2D geometries under www.BauerCat.com.

BF30G06

Flange with tapped holes
Code -7./

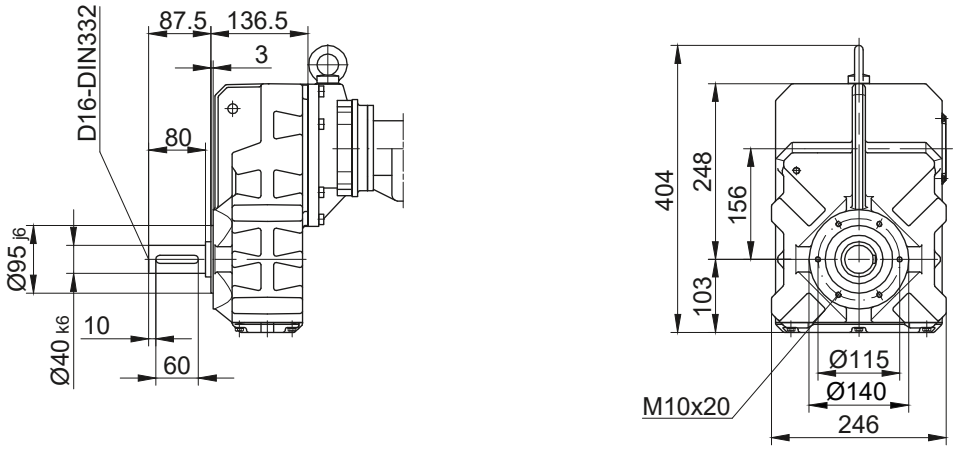

Flange with clearance holes
Code -3./
(Code -2./)

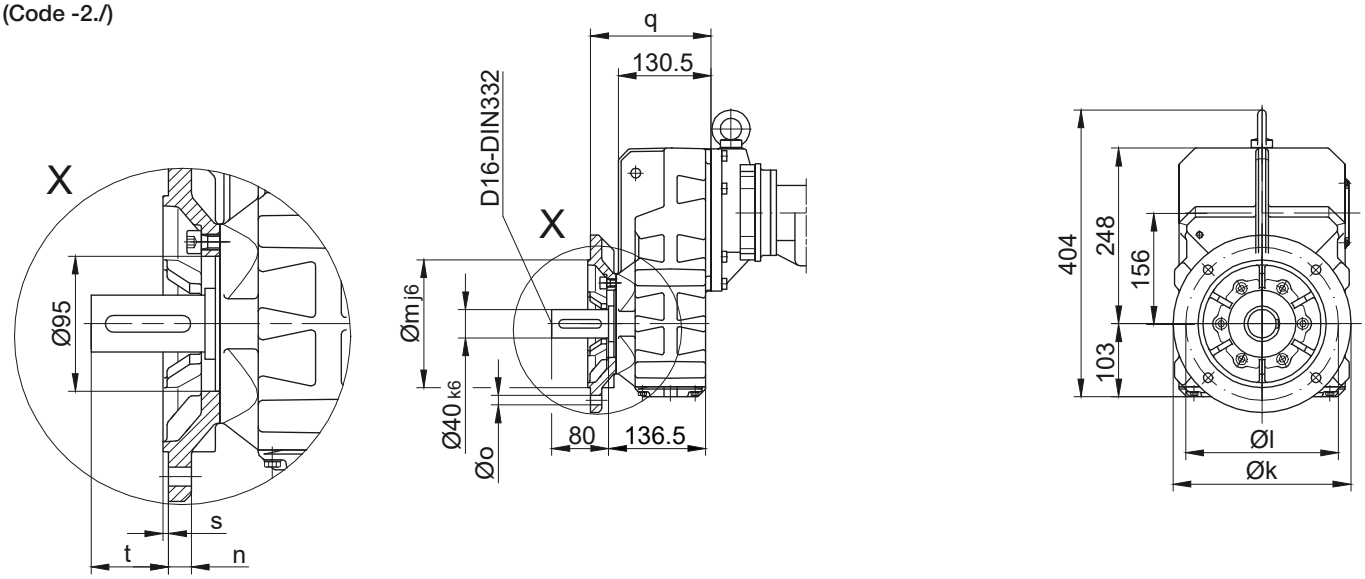

Flange Dimensions									
Type	Design	k	l	m	n	o	q	s	t
BF30..	Code -3./	250	215	180	16	13.5	169.5	4	54.5
BF30..	Code -2./	200	165	130	12	11	160.5	3.5	63.5
Dimensions in millimetres (mm)									

Foot with tapped holes left and right
Code -6.LR/

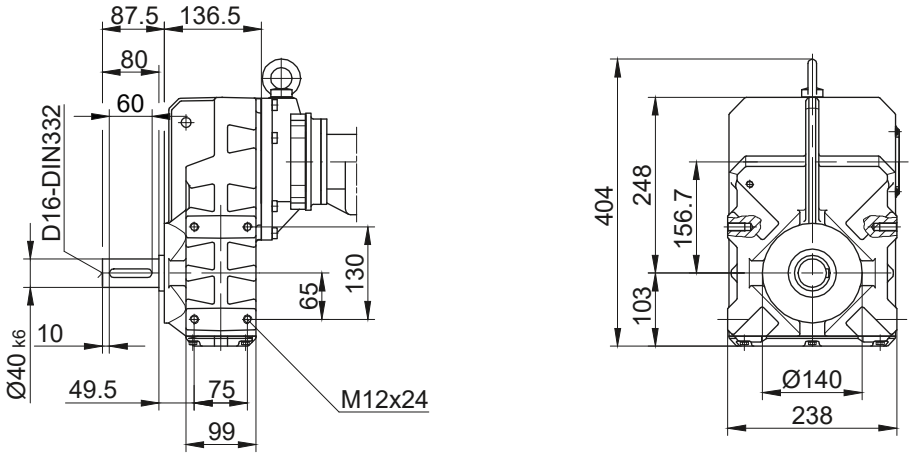

The actual gearbox design can vary from the geometry shown. Generate drive specific 3D and 2D geometries under www.BauerCat.com.

BF40G10
with torque arm
Code -0./

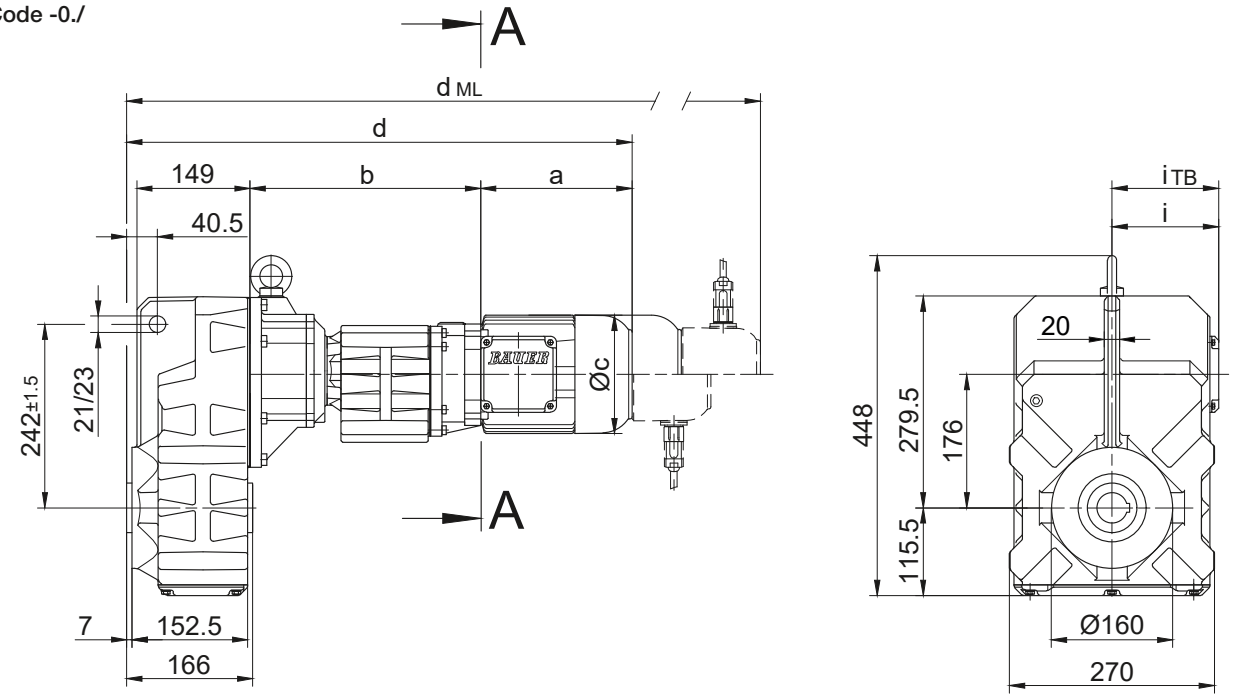

Code -.4/

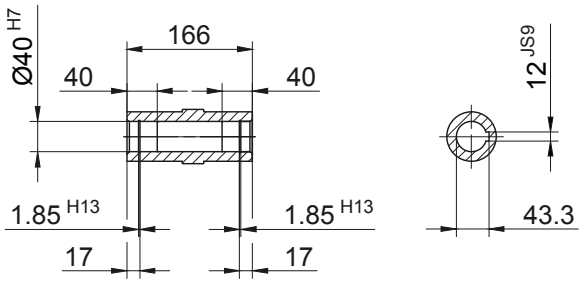

Code -.1/

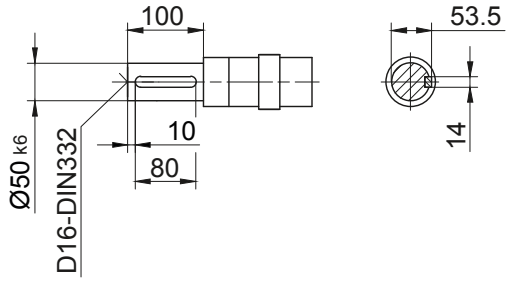

Code -.5/

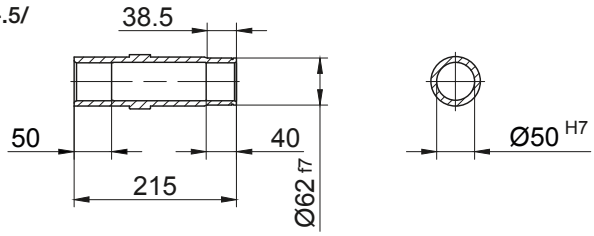

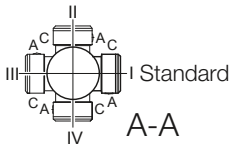

Type	a	b	c	d	i	Design with motor extensions				
						i_{TB}	Brake	Encoder	Brake with Encoder	Back Stop
							d_{ML}	d_{ML}	d_{ML}	d_{ML}
BF40G10-../D..05.A.	170.5	300	123	633	101	117	675	735.5	773	-
BF40G10-../D..06.A.	170.5	300	123	633	99	119	675	735.5	773	-
BF40G10-../D..07.A.	190.5	300	123	653	99	119	695	755.5	793	-
BF40G10-../D..08.A.	199.5	304	156	666	114.5	136.5	732	778	839.5	732
BF40G10-../D..08.B.	229.5	304	156	696	114.5	136.5	762	808	869	762
BF40G10-../D..09.A.	250.5	318.5	176	731.5	124	157	824.5	839	928.5	824.5
BF40G10-../D..09.B.	308.5	318.5	176	789.5	124	157	882.5	896.5	986.5	882.5

Dimensions in millimetres (mm)

The actual gearbox design can vary from the geometry shown. Generate drive specific 3D and 2D geometries under www.BauerCat.com.

BF40G10

Flange with tapped holes
Code -7./

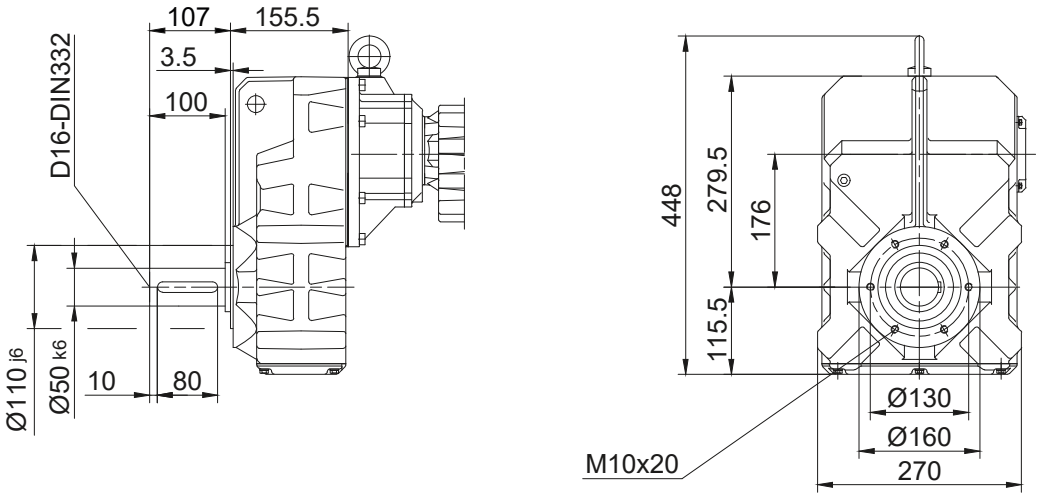

Flange with clearance holes
Code -3./
(Code -4./)

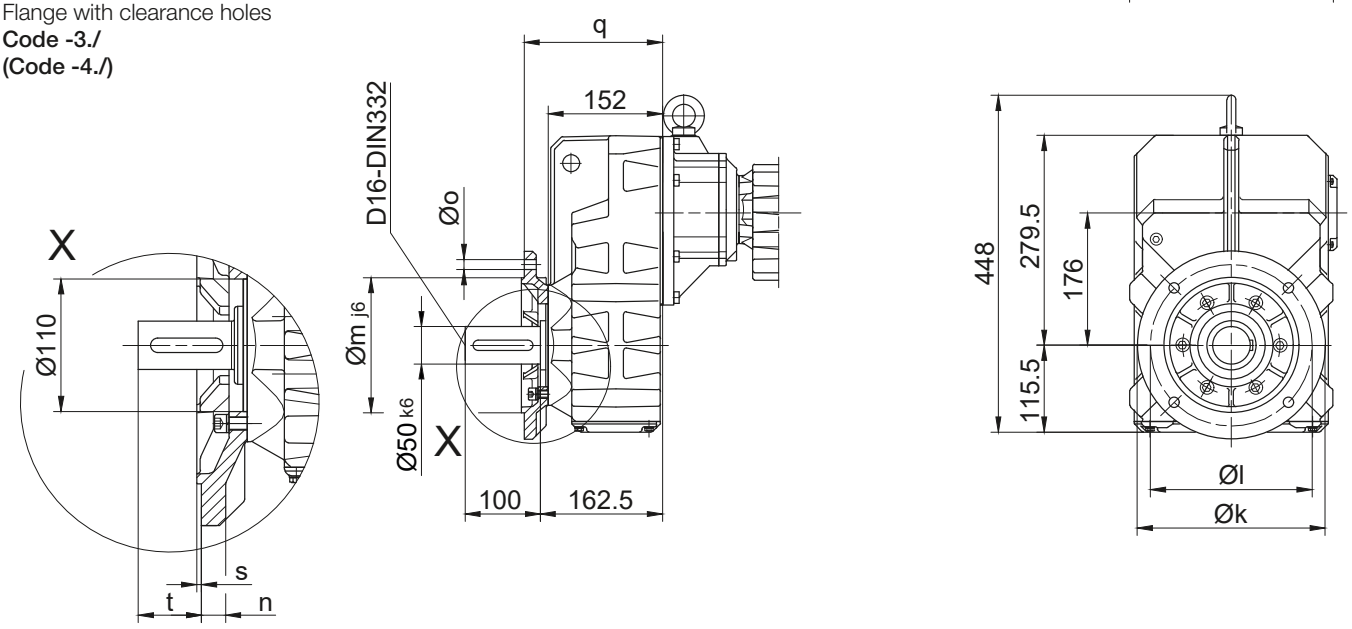

Flange Dimensions									
Type	Design	k	l	m	n	o	q	s	t
BF40..	Code -3./	250	215	180	16	13.5	184	4	78.5
BF40..	Code -4./	300	265	230	20	13.5	190	4	72.5
Dimensions in millimetres (mm)									

Foot with tapped holes left and right
Code -6.LR/

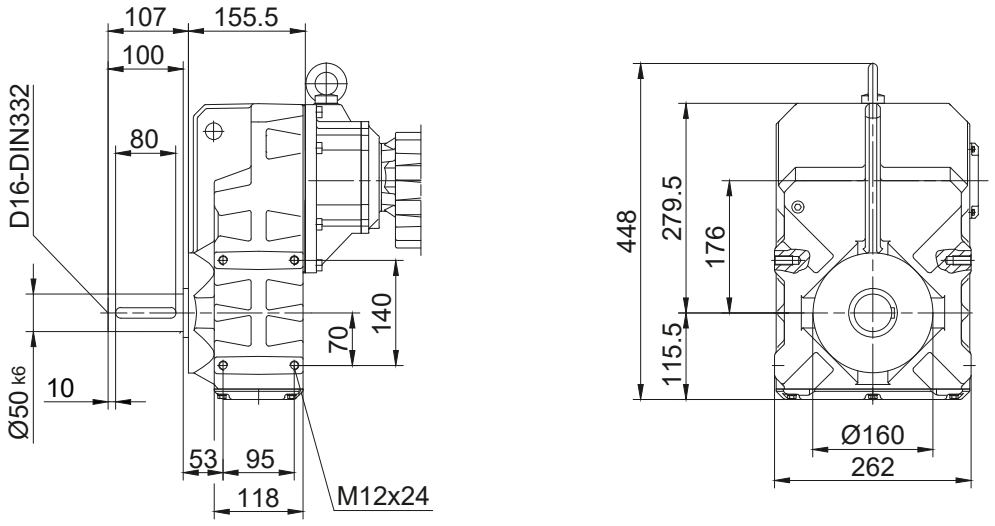

The actual gearbox design can vary from the geometry shown. Generate drive specific 3D and 2D geometries under www.BauerCat.com.

BF50G10
with torque arm
Code -0./

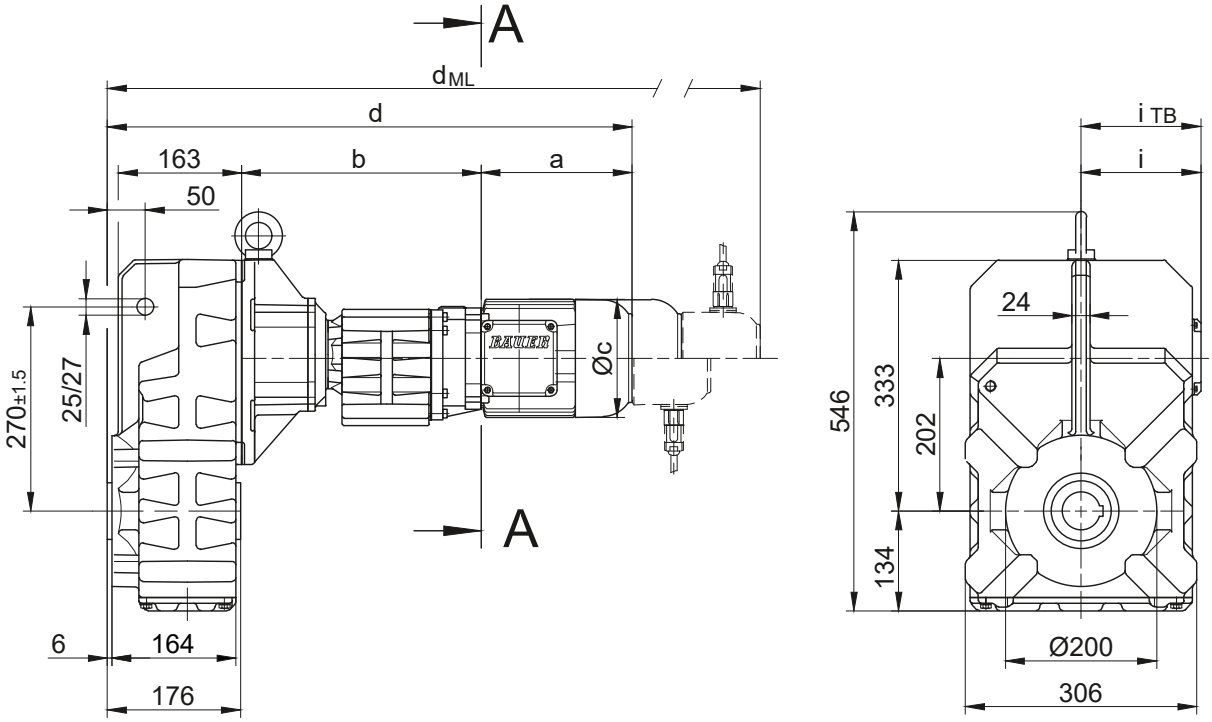

Code -.1/

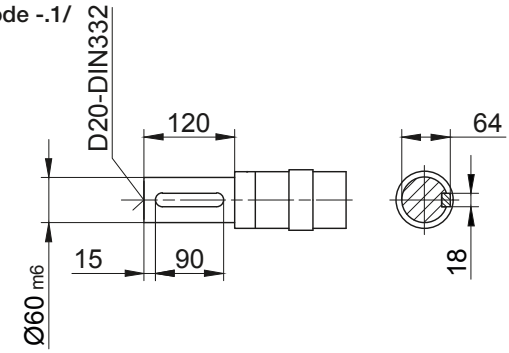

Code -.4/

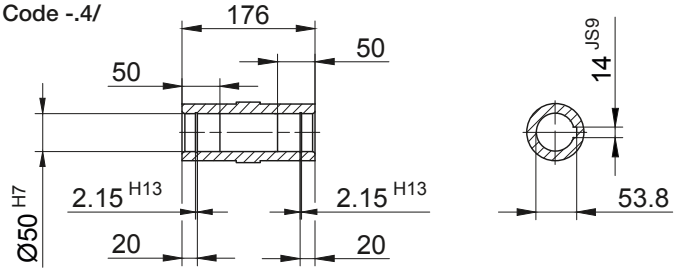

Code -.5/

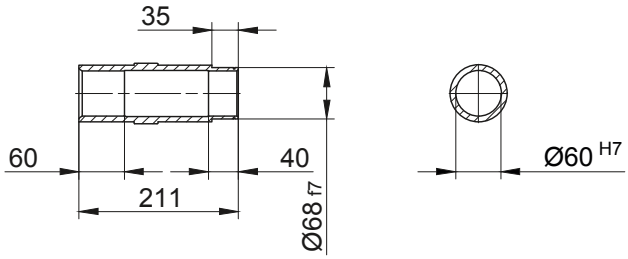

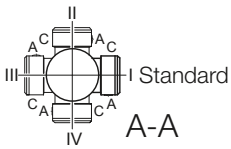

Type	a	b	c	d	i	Design with motor extensions				
						i_{TB}	Brake	Encoder	Brake with Encoder	Back Stop
							d_{ML}	d_{ML}	d_{ML}	d_{ML}
BF50G10-../D..05.A.	170.5	313	123	661	101	117	703	763.5	801	-
BF50G10-../D..06.A.	170.5	313	123	661	99	119	703	763.5	801	-
BF50G10-../D..07.A.	190.5	313	123	681	99	119	723	783.5	821	-
BF50G10-../D..08.A.	199.5	317	156	694	114.5	136.5	760	806	867.5	760
BF50G10-../D..08.B.	229.5	317	156	724	114.5	136.5	790	836	897	790
BF50G10-../D..09.A.	250.5	331.5	176	759.5	124	157	852.5	867	956.5	852.5
BF50G10-../D..09.B.	308.5	331.5	176	817.5	124	157	910.5	924.5	1014.5	910.5
Dimensions in millimetres (mm)										

The actual gearbox design can vary from the geometry shown. Generate drive specific 3D and 2D geometries under www.BauerCat.com.

BF50G10

Flange with tapped holes
Code -7./

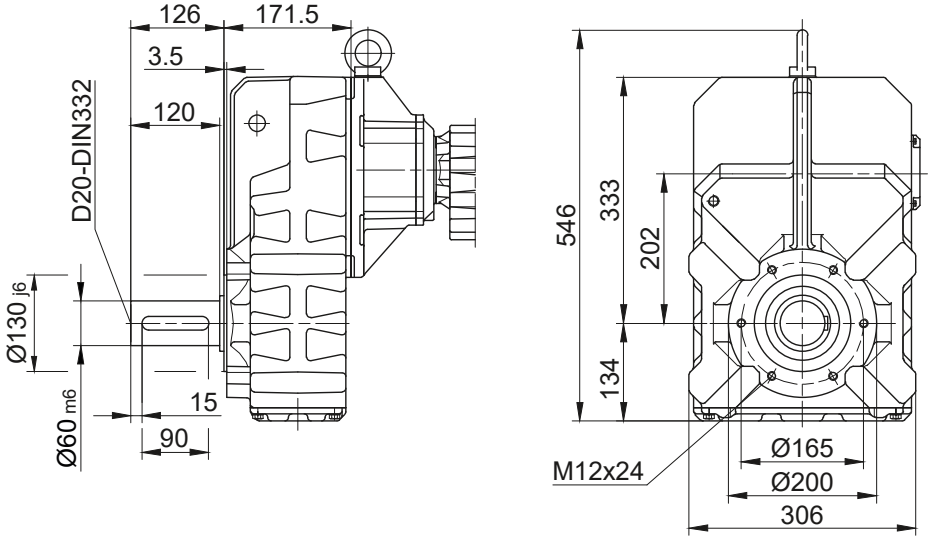

Flange with clearance holes
Code -3./
(Code -2./)

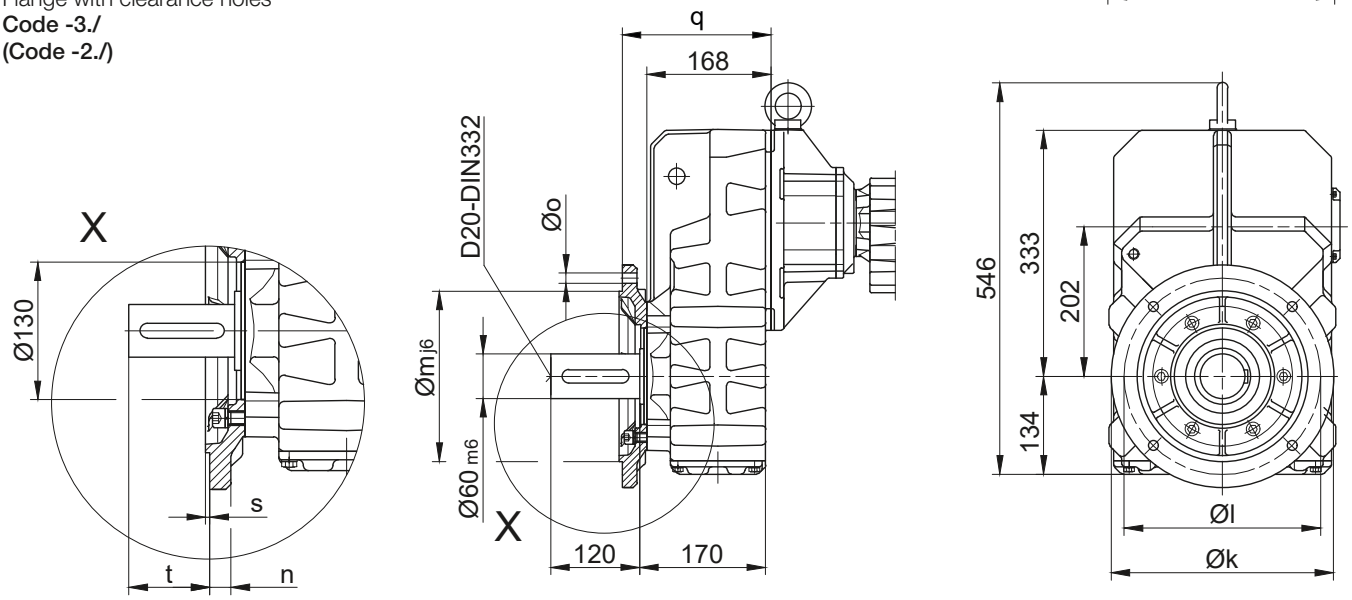

Flange Dimensions									
Type	Design	k	l	m	n	o	q	s	t
BF50..	Code -3./	300	265	230	20	13.5	201	4	96.5
BF50..	Code -2./	250	215	180	16	13.5	198	4	99.5
Dimensions in millimetres (mm)									

Foot with tapped holes left and right
Code -6.LR/

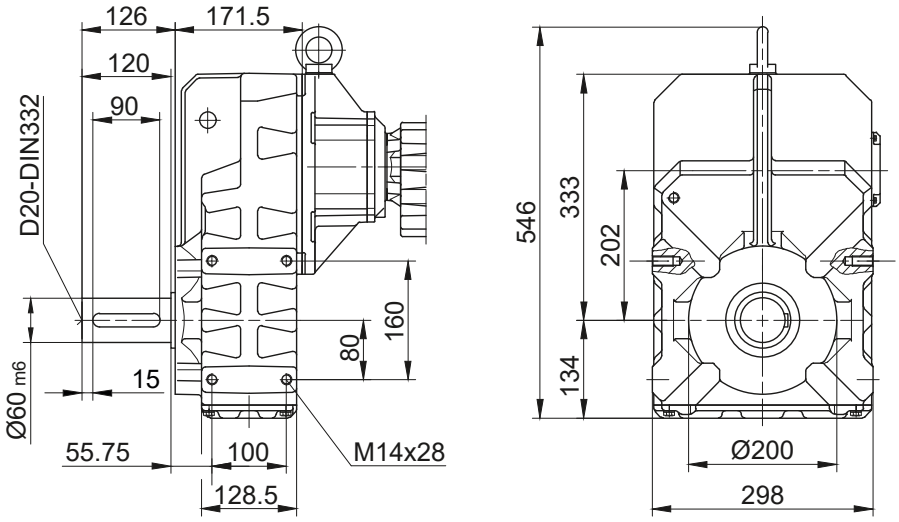

The actual gearbox design can vary from the geometry shown. Generate drive specific 3D and 2D geometries under www.BauerCat.com.

BF60G20
with torque arm
Code -0./

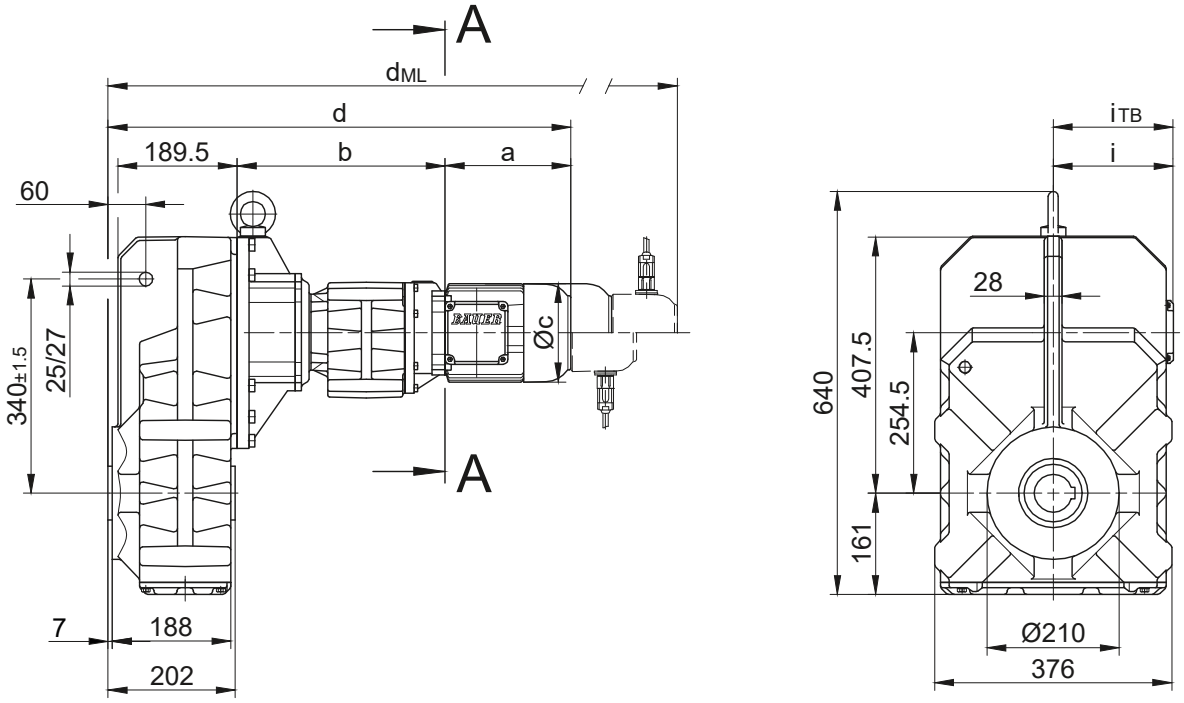

Code -.1/

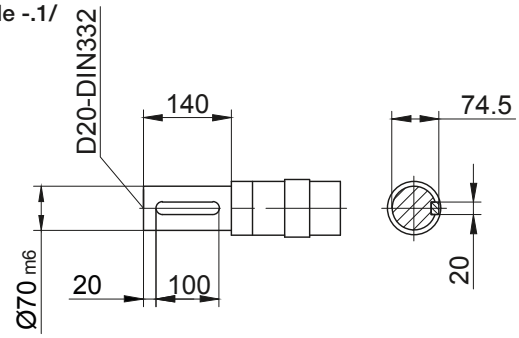

Code -.4/

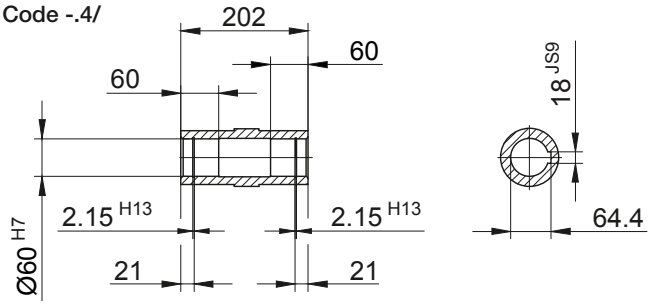

Code -.5/

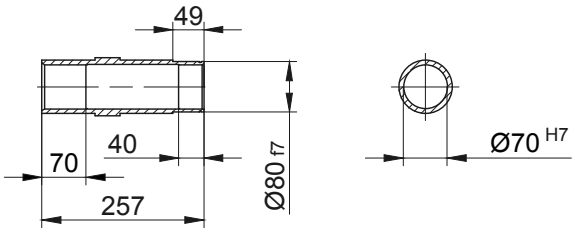

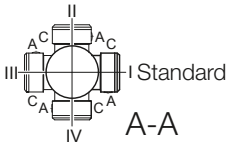

Type	a	b	c	d	i	Design with motor extensions				
						i_{TB}	Brake	Encoder	Brake with Encoder	Back Stop
							d_{ML}	d_{ML}	d_{ML}	d_{ML}
BF60G20-../D..05.A.	170.5	326	123	701.5	101	117	743.5	804	841.5	-
BF60G20-../D..06.A.	170.5	326	123	701.5	99	119	743.5	804	841.5	-
BF60G20-../D..07.A.	190.5	326	123	721.5	99	119	763.5	824	861.5	-
BF60G20-../D..08.A.	199.5	330	156	734.5	114.5	136.5	800.5	846.5	908	800.5
BF60G20-../D..08.B.	229.5	330	156	764.5	114.5	136.5	830.5	876.5	937.5	830.5
BF60G20-../D..09.A.	250.5	344.5	176	800	124	157	893	907.5	997	893
BF60G20-../D..09.B.	308.5	344.5	176	858	124	157	951	965	1055	951

Dimensions in millimetres (mm)

The actual gearbox design can vary from the geometry shown. Generate drive specific 3D and 2D geometries under www.BauerCat.com.

BF60G20

Flange with tapped holes
Code -7./

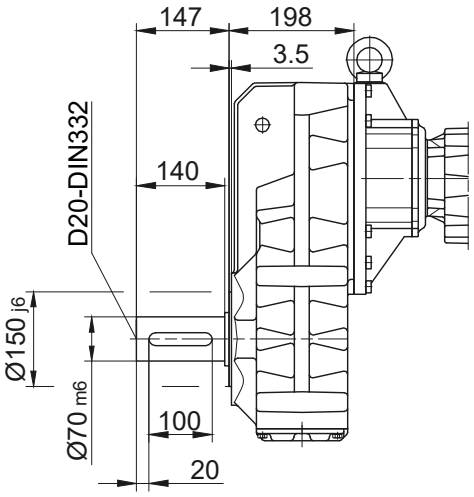

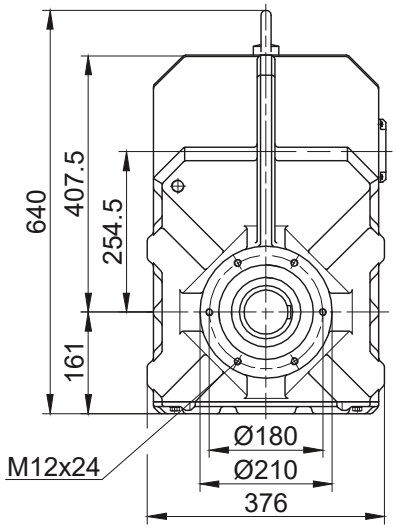

Flange with clearance holes
Code -3./
(Code -2./)

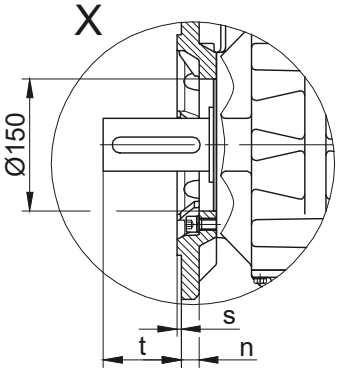

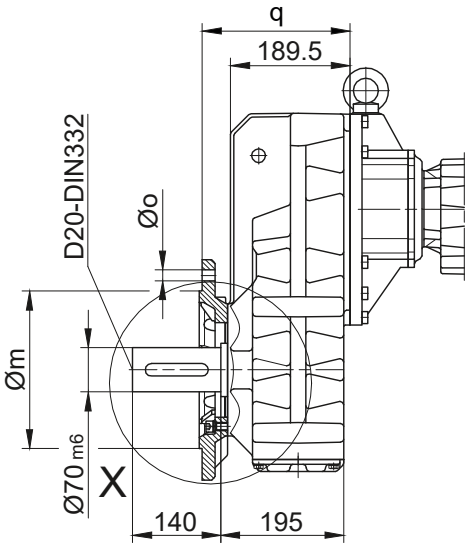

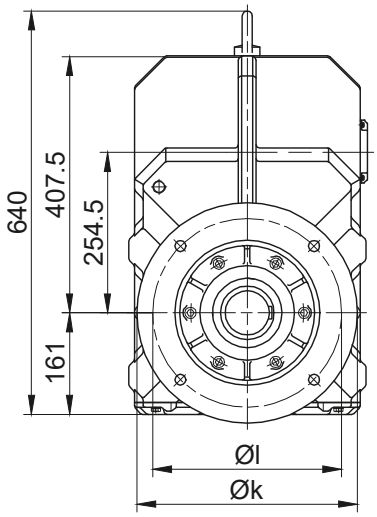

Flange Dimensions									
Type	Design	k	l	m	n	o	q	s	t
BF60..	Code -3./	350	300	250	20	17.5	234.5	5	110.5
BF60..	Code -2./	300	265	230	20	13.5	242.5	4	102.5
Dimensions in millimetres (mm)									

Foot with tapped holes left and right
Code -6.LR/

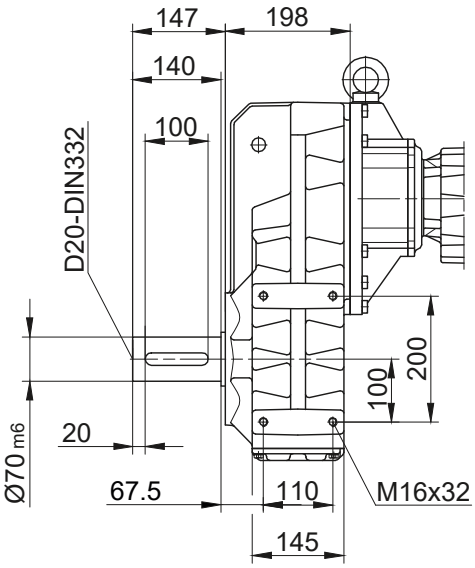

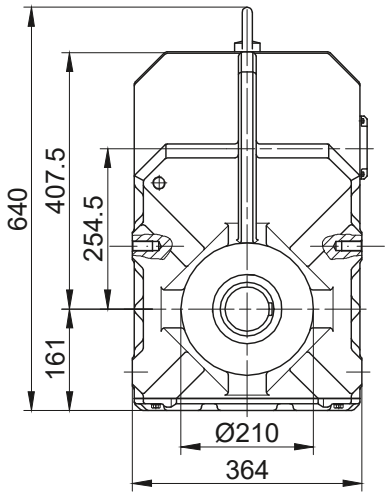

The actual gearbox design can vary from the geometry shown. Generate drive specific 3D and 2D geometries under www.BauerCat.com.

BF70G20

with torque arm

Code -0./

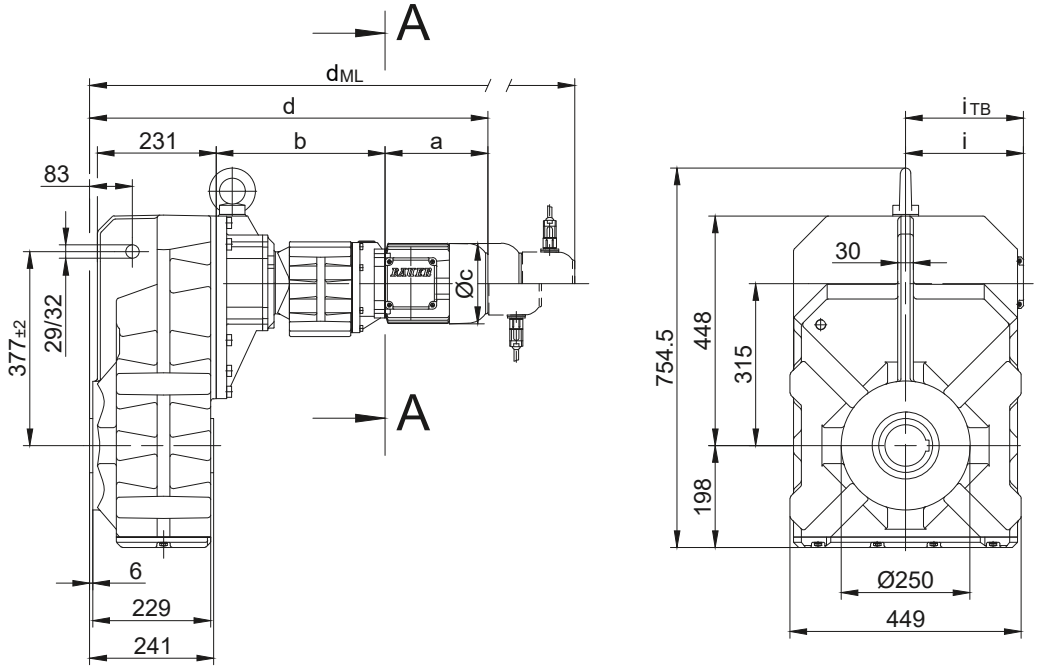

Code -.4/

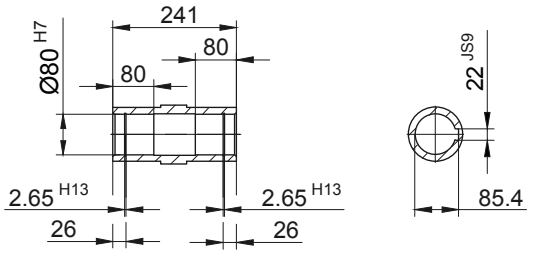

Code -.1/

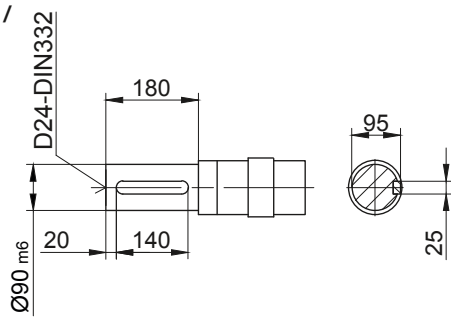

Code -.5/

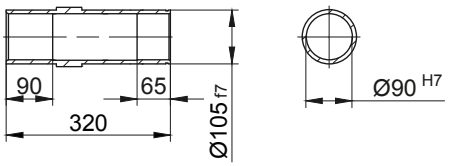

Code -.4/K70

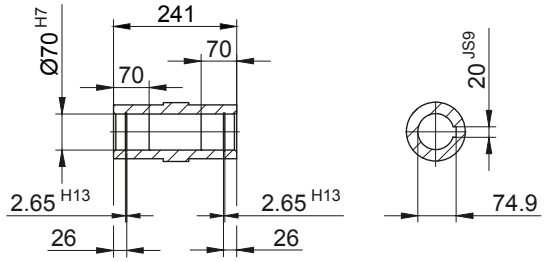

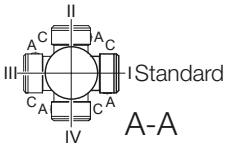

Type	a	b	c	d	i	Design with motor extensions				
						i_{TB}	Brake	Encoder	Brake with Encoder	Back Stop
							d_{ML}	d_{ML}	d_{ML}	d_{ML}
BF70G20-../D..05.A.	170.5	324	123	740.5	101	117	782.5	843	880.5	-
BF70G20-../D..06.A.	170.5	324	123	740.5	99	119	782.5	843	880.5	-
BF70G20-../D..07.A.	190.5	324	123	760.5	99	119	802.5	863	900.5	-
BF70G20-../D..08.A.	199.5	328	156	773.5	114.5	136.5	839.5	885.5	947	839.5
BF70G20-../D..08.B.	229.5	328	156	803.5	114.5	136.5	869.5	915.5	976.5	869.5
BF70G20-../D..09.A.	250.5	342.5	176	839	124	157	932	946.5	1036	932
BF70G20-../D..09.B.	308.5	342.5	176	897	124	157	990	1004	1094	990

Dimensions in millimetres (mm)

The actual gearbox design can vary from the geometry shown. Generate drive specific 3D and 2D geometries under www.BauerCat.com.

BF70G20

Flange with tapped holes
Code -7./

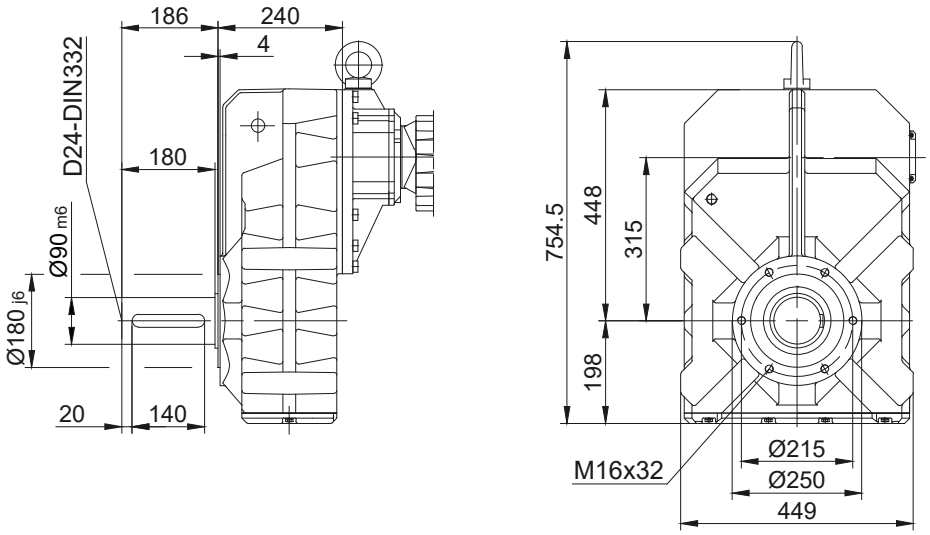

Flange with clearance holes
Code -3./
(Code -2./)
(Code -4./)

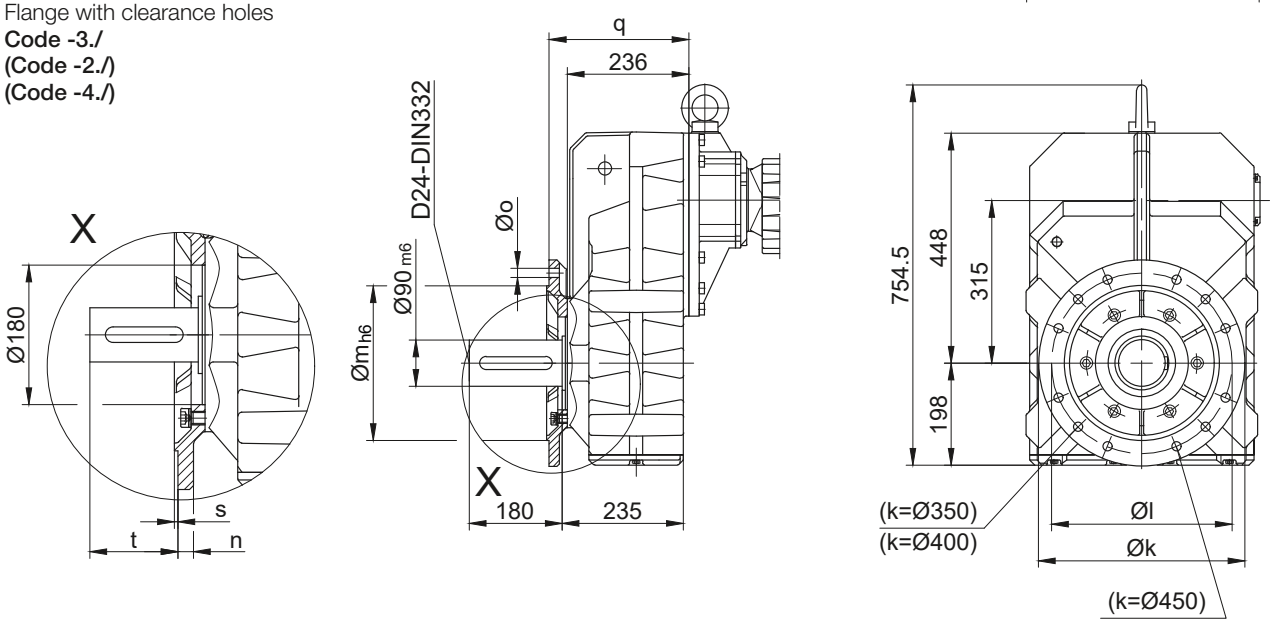

Flange Dimensions									
Type	Design	k	l	m	n	o	q	s	t
BF70..	Code -3./	400	350	300	20	4 x 17.5	271	5	155
BF70..	Code -2./	350	300	250	20	4 x 17.5	271	5	155
BF70..	Code -4./	450	400	350	22	8 x 17.5	281	5	145
Dimensions in millimetres (mm)									

Foot with tapped holes left and right
Code -6.LR/

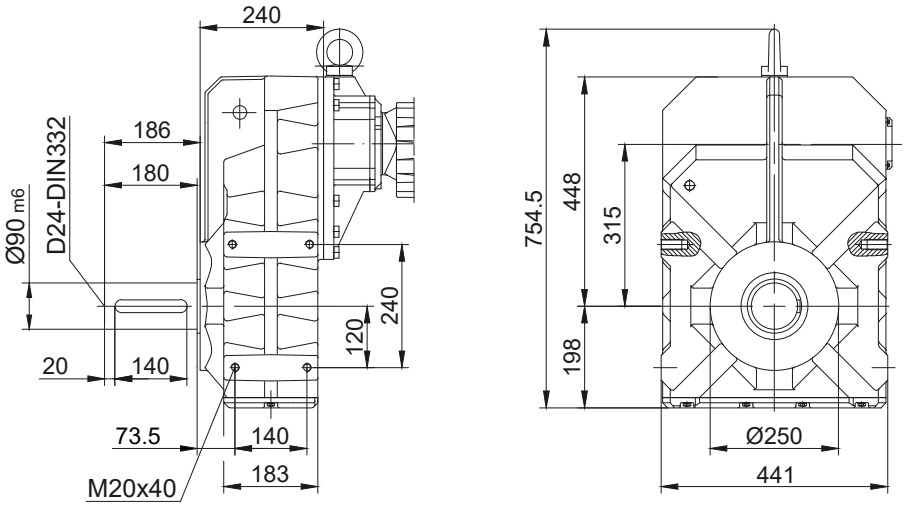

The actual gearbox design can vary from the geometry shown. Generate drive specific 3D and 2D geometries under www.BauerCat.com.

Dimension - Tandem Gearbox

BF80G40
with torque arm
Code -0./

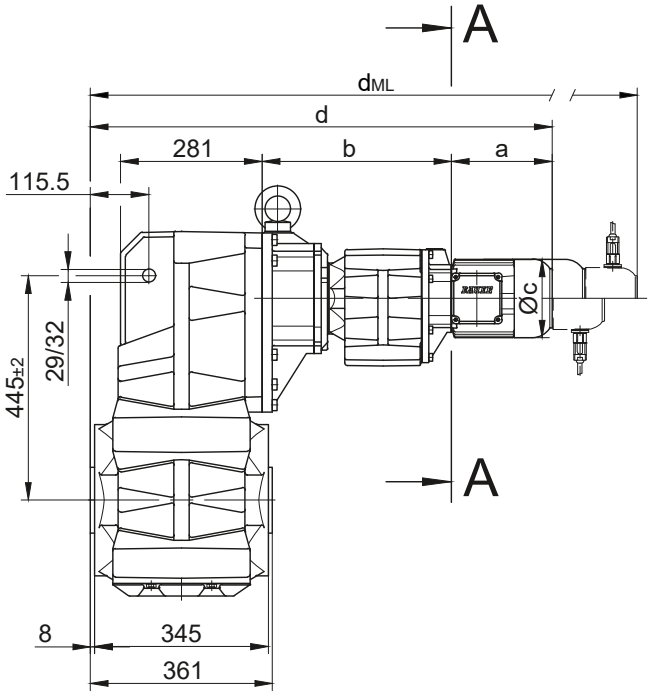

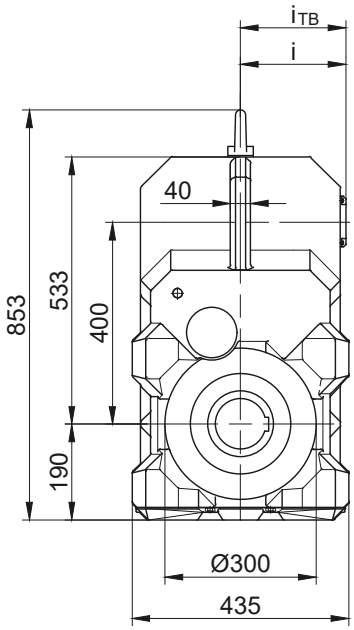

Code -.1/

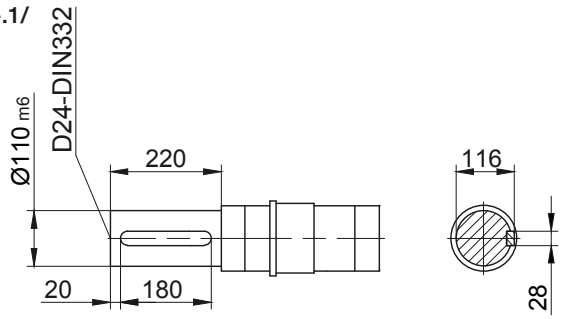

Code -.4/

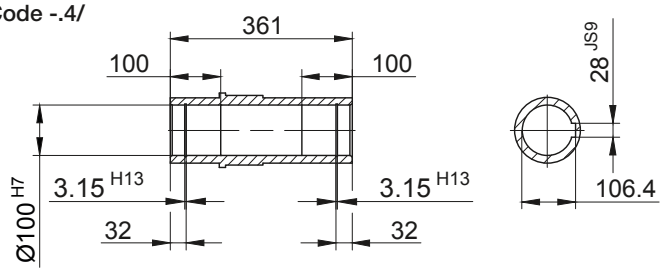

Code -.5/

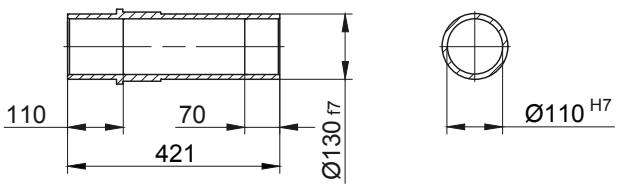

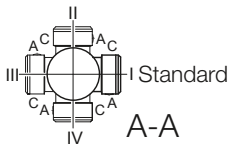

Type	a	b	c	d	i	Design with motor extensions				
						i_{TB}	Brake	Encoder	Brake with Encoder	Back Stop
							d_{ML}	d_{ML}	d_{ML}	d_{ML}
BF80G40-../D..08.A.	199.5	376	156	916	114.5	136.5	982	1028	1089.5	982
BF80G40-../D..08.B.	229.5	376	156	946	114.5	136.5	1012	1058	1119	1012
BF80G40-../D..09.A.	250.5	390.5	176	981.5	124	157	1074.5	1089	1178.5	1074.5
BF80G40-../D..09.B.	308.5	390.5	176	1039.5	124	157	1132.5	1146.5	1236.5	1132.5
BF80G40-../D..11.A.	319	397	218	1056.5	165	176	1154.5	1164	1256.5	1154.5
BF80G40-../D..11.B.	387	397	218	1124.5	165	176	1220.5	1232	1324.5	1220.5
Dimensions in millimetres (mm)										

The actual gearbox design can vary from the geometry shown. Generate drive specific 3D and 2D geometries under www.BauerCat.com.

BF80G40

Flange with tapped holes
Code -7./

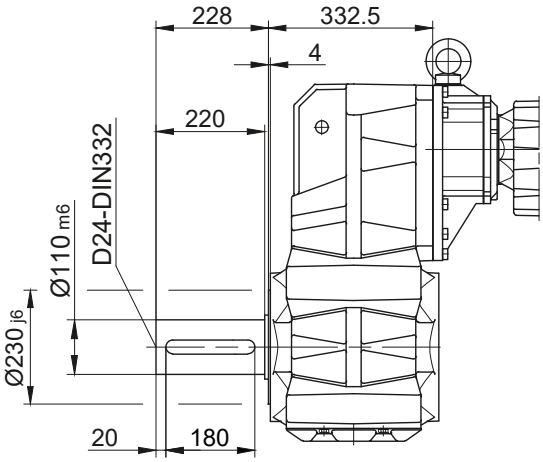

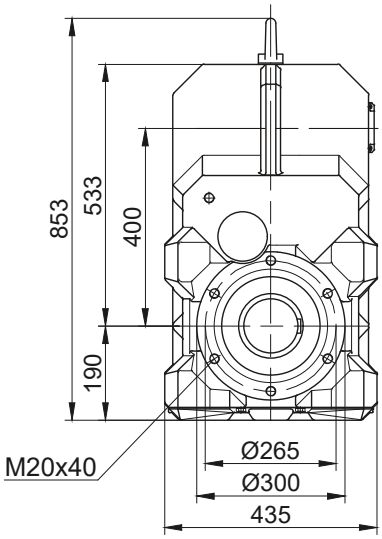

Flange with clearance holes
Code -3./
(Code -4./)

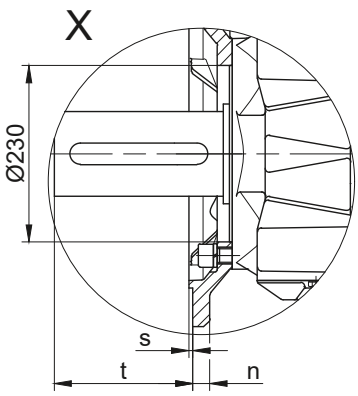

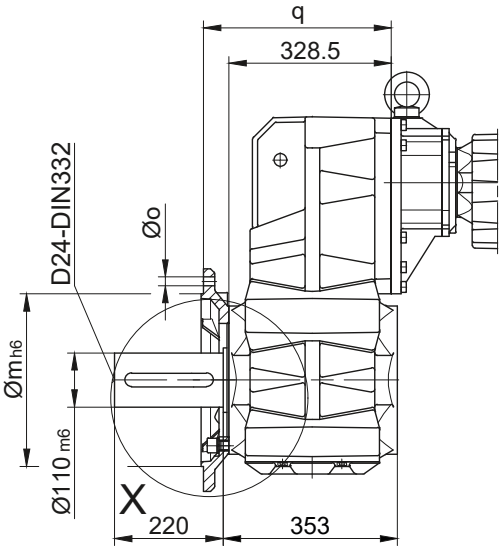

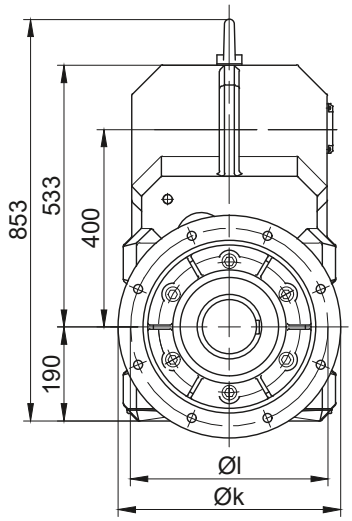

Flange Dimensions									
Type	Design	k	l	m	n	o	q	s	t
BF80..	Code -3./	450	400	350	22	17.5	383.5	5	177
BF80..	Code -4./	550	500	450	22	17.5	388.5	5	172
Dimensions in millimetres (mm)									

Foot with clearance holes left and right
Code -1.LR/

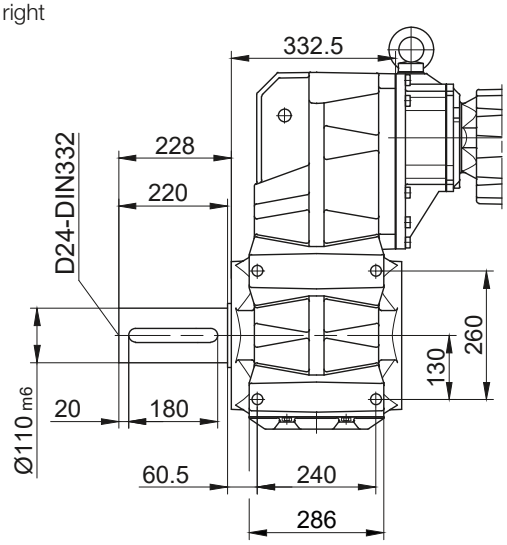

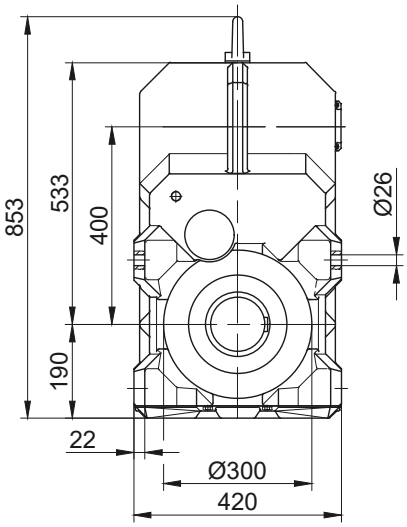

The actual gearbox design can vary from the geometry shown. Generate drive specific 3D and 2D geometries under www.BauerCat.com.

BF90G50
with torque arm
Code -0./

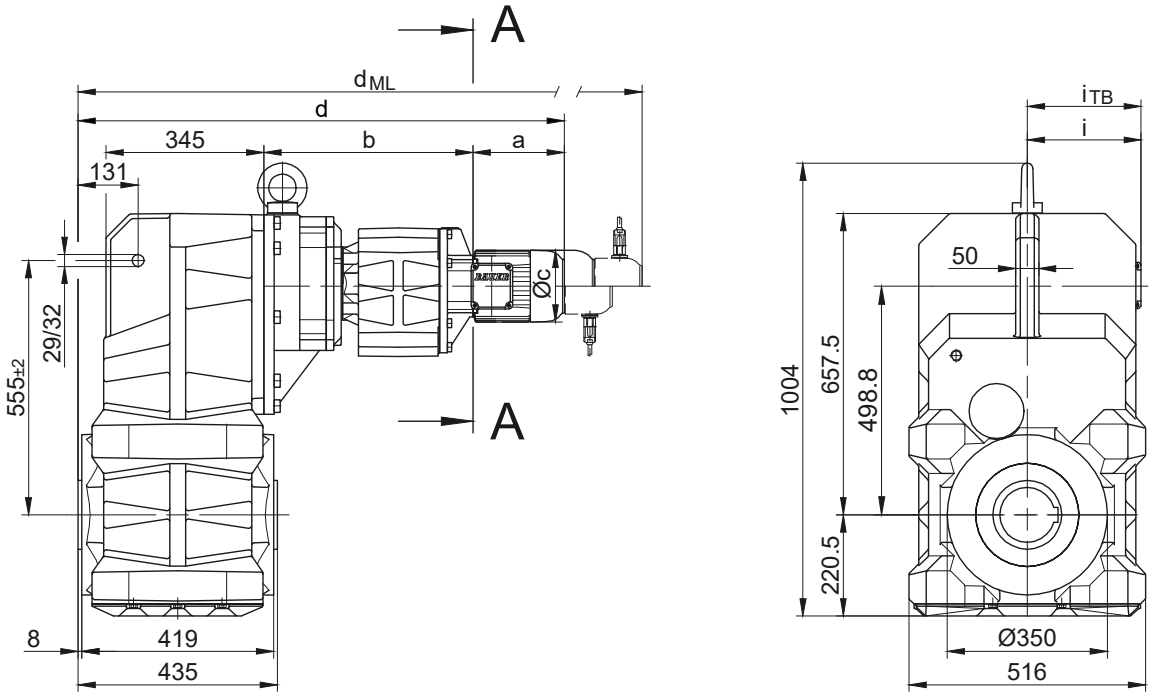

Code -.1/

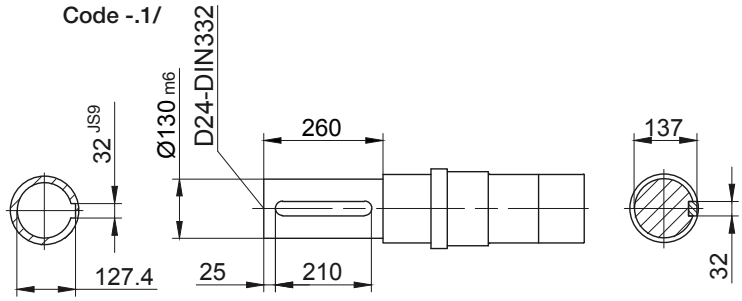

Code -.4/

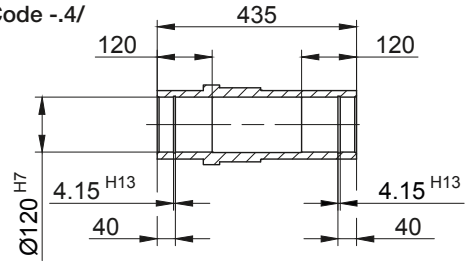

Code -.5/

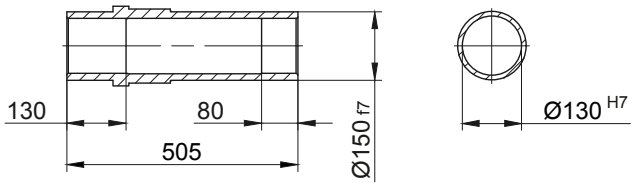

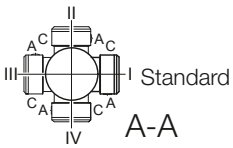

Type	a	b	c	d	i	Design with motor extensions				
						i_{TB}	Brake	Encoder	Brake with Encoder	Back Stop
							d_{ML}	d_{ML}	d_{ML}	d_{ML}
BF90G50-../D..08.A.	199.5	456	156	1061.5	114.5	136.5	1127.5	1173.5	1235	1127.5
BF90G50-../D..08.B.	229.5	456	156	1091.5	114.5	136.5	1157.5	1203.5	1264.5	1157.5
BF90G50-../D..09.A.	250.5	470.5	176	1127	124	157	1220	1234.5	1324	1220
BF90G50-../D..09.B.	308.5	470.5	176	1185	124	157	1278	1292	1382	1278
BF90G50-../D..11.A.	319	477	218	1202	165	176	1300	1309.5	1402	1300
BF90G50-../D..11.B.	387	477	218	1270	165	176	1366	1377.5	1470	1366
BF90G50-../D..13.A.	393	490	258	1289	217	217	1400	1396	1501	1397
BF90G50-../D..16.B.	454.5	504	310	1364.5	243	243	1508	1471.5	1611.5	1508
BF90G50-../D..18.B.	542	526	348	1474	288	288	1623.5	1579.5	1727	1623.5

Dimensions in millimetres (mm)

The actual gearbox design can vary from the geometry shown. Generate drive specific 3D and 2D geometries under www.BauerCat.com.

BF90G50

Flange with tapped holes
Code -7./

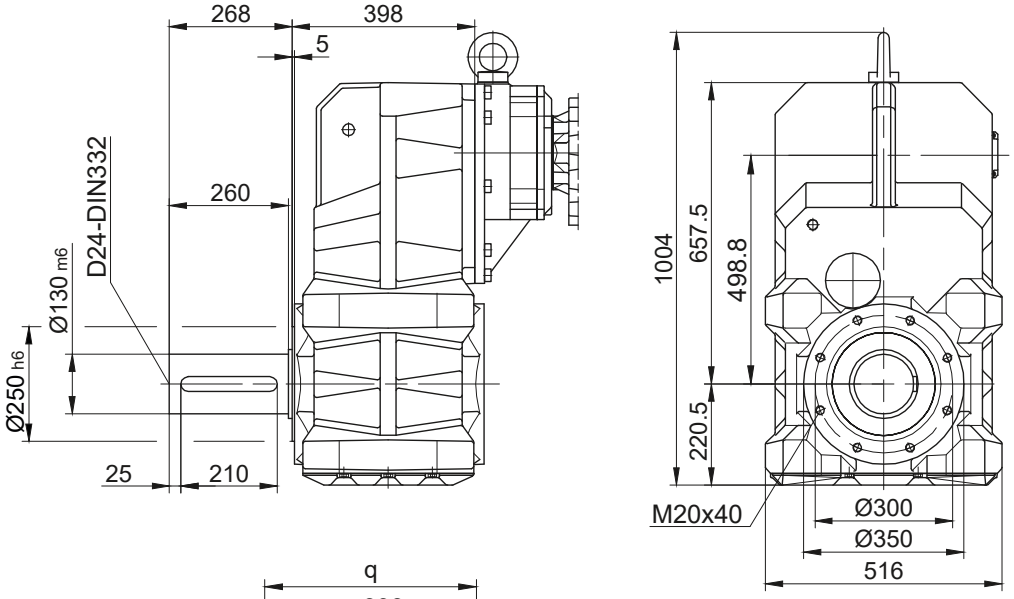

Flange with clearance holes
Code -3./
(Code -4./)

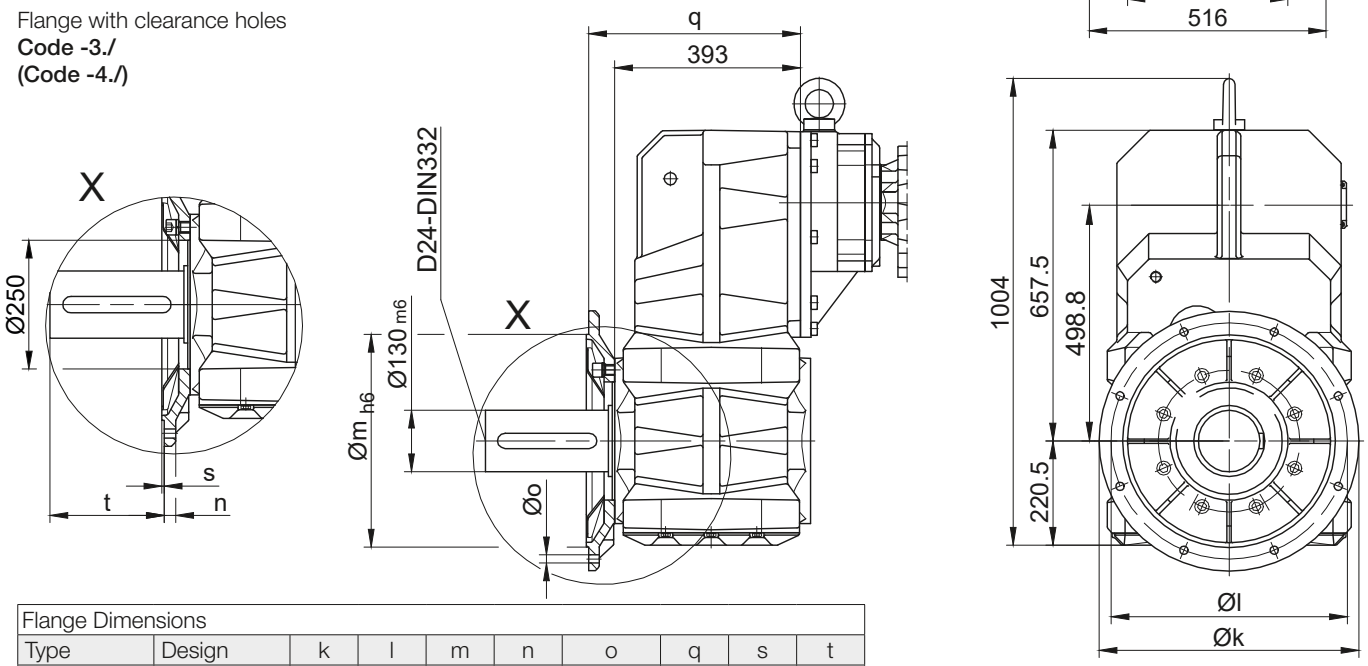

Flange Dimensions									
Type	Design	k	l	m	n	o	q	s	t
BF90..	Code -3./	550	500	450	22	17.5	448	5	218
BF90..	Code -4./	660	600	550	25	22	442	6	224
Dimensions in millimetres (mm)									

Foot with clearance holes left and right
Code -1.LR/

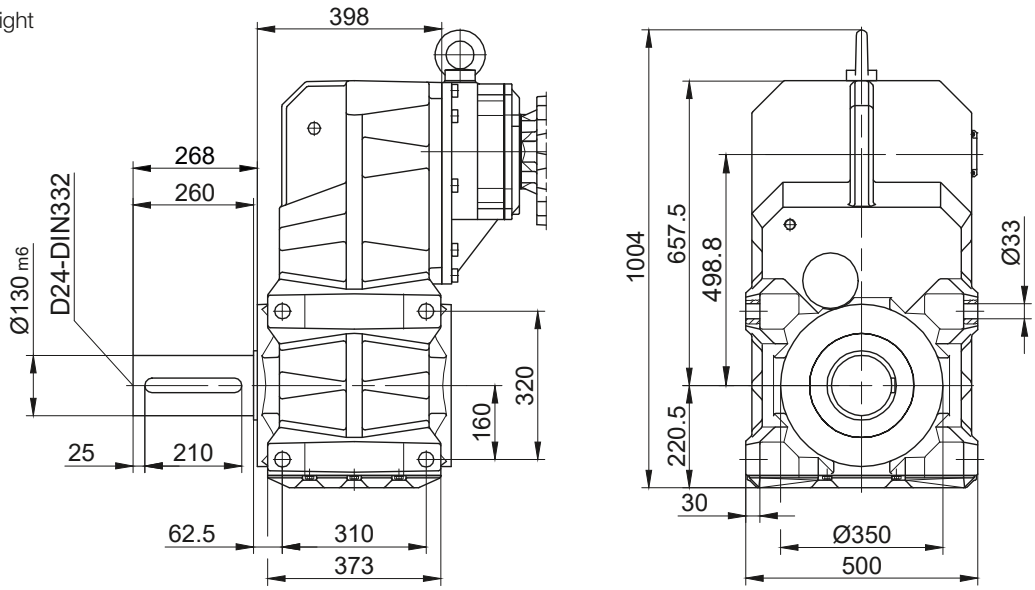

The actual gearbox design can vary from the geometry shown. Generate drive specific 3D and 2D geometries under www.BauerCat.com.

Splined shaft

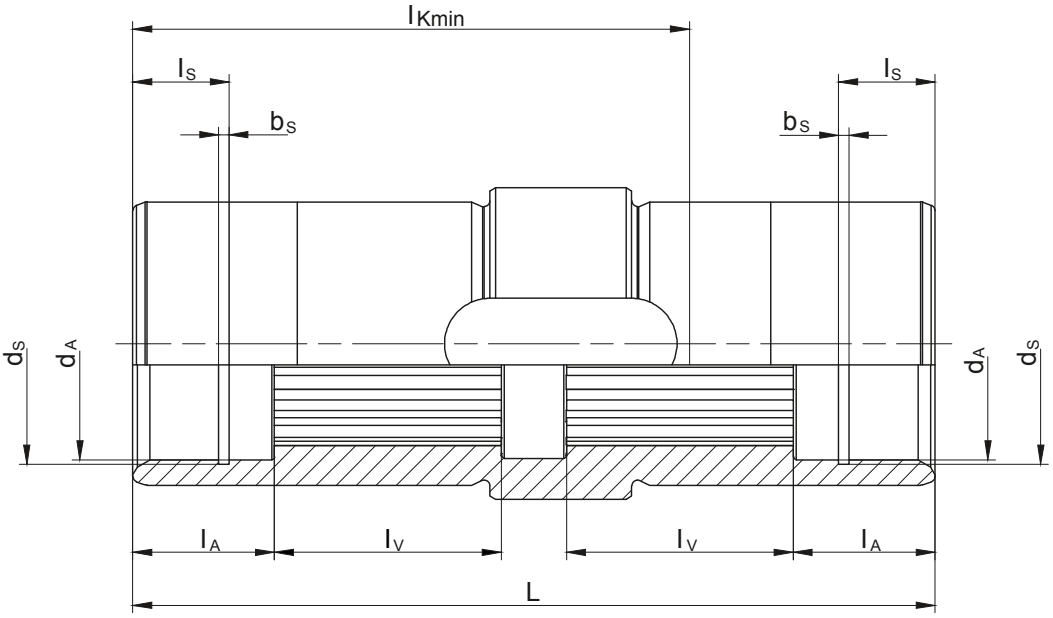

Type	Splined shaft acc. to DIN 5480	d_A	l_A	l_V	l_{Kmin}	L	d_S	l_S	b_S
BF06	N25x1.25x18x9H	30^{G7}	22	20	68	92	31.4^{H12}	15	1.3^{H13}
BF10	N30x1.25x22x9H	30.5^{G7}	22	33.5	87	124.5	31.4^{H12}	15	1.3^{H13}
BF20	N35x2x16x9H	36^{G7}	22	35	92	130	37^{H12}	9.5	1.6^{H13}
BF30	N40x2x18x9H	41^{G7}	25	40	103	141.5	42.5^{H12}	15	1.85^{H13}
BF40	N50x2x24x9H	51^{G7}	25	48	120	166	53^{H12}	9.5	2.15^{H13}
BF50	N60x2x28x9H	61^{G7}	25	55	123	176	63^{H12}	17	2.15^{H13}
BF60	N70x2x34x9H	72^{G7}	25	70	147	202	75^{H12}	17	2.65^{H13}
BF70	N85x3x27x9H	86^{G7}	26	85	185	241	88.5^{H12}	17	3.15^{H13}
BF80	N110x3x35x9H	112^{G7}	50	90	292	361	116^{H12}	30	4.15^{H13}
BF90	N130x5x24x9H	131.5^{G7}	60	110	365	435	134^{H12}	30	4.15^{H13}
Dimensions in millimetres (mm)									

The actual gearbox design can vary from the geometry shown. Generate drive specific 3D and 2D geometries under www.BauerCat.com.

Shrink disc coupling (SSV)

(Code BF10-.5/...)
(Code BF10Z-.5/...)

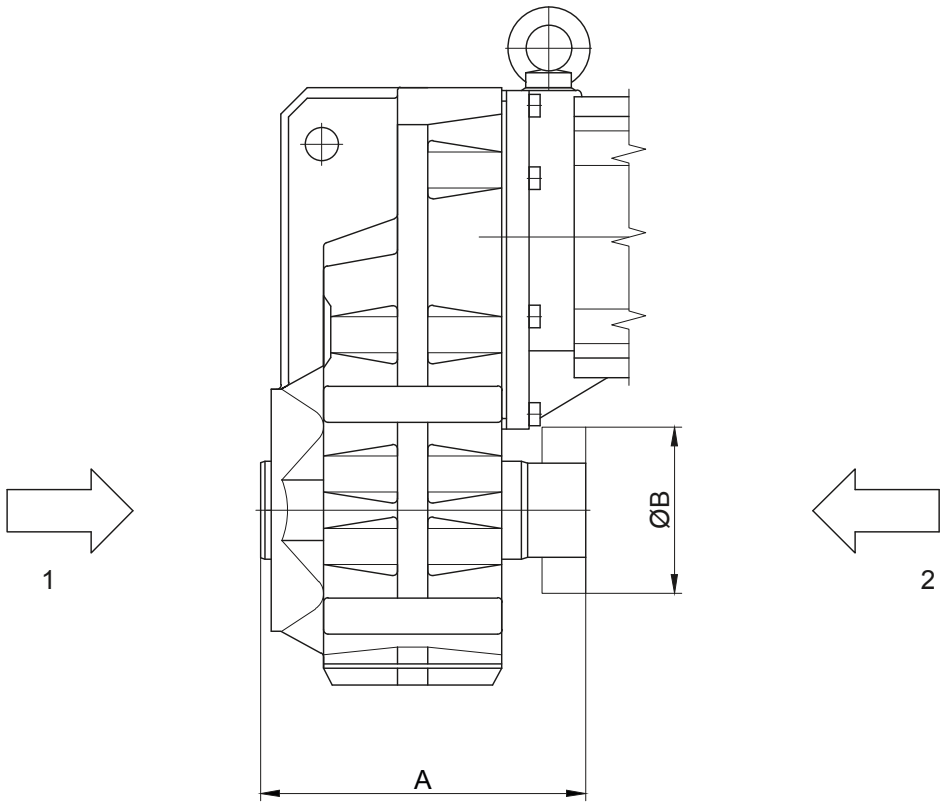

1 Gear side FRONT (V)
2 Gear side REAR (H)

Type	SSV Ringfeder	SSV STÜWE	A	B
BF10	RfN 4161 036x072	HSD 36-22x36	153	72
BF20	RfN 4161 044x080	HSD 44-22x44	173	80
BF30	RfN 4161 050x090	HSD 50-22x50	192	90
BF40	RfN 4161 062x110	HSD 62-22x62	215	110
BF50	RfN 4161 068x115	HSD 68-22x68	211	115
BF60	RfN 4161 080x141	HSD 80-22x80	257	140
BF70	RfN 4161 105x185	HSD 110-22x105	320	185
BF80	RfN 4161 130x215	HSD 125-22x130	421	215
BF90	RfN 4161 150x263	HSD 155-22x150	505	263
Dimensions in millimetres (mm)				

The actual gearbox design can vary from the geometry shown. Generate drive specific 3D and 2D geometries under www.BauerCat.com.

Shrink disc coupling with (SSV) cover

(Code BF10-.5A/...)
(Code BF10Z-.5A/...)

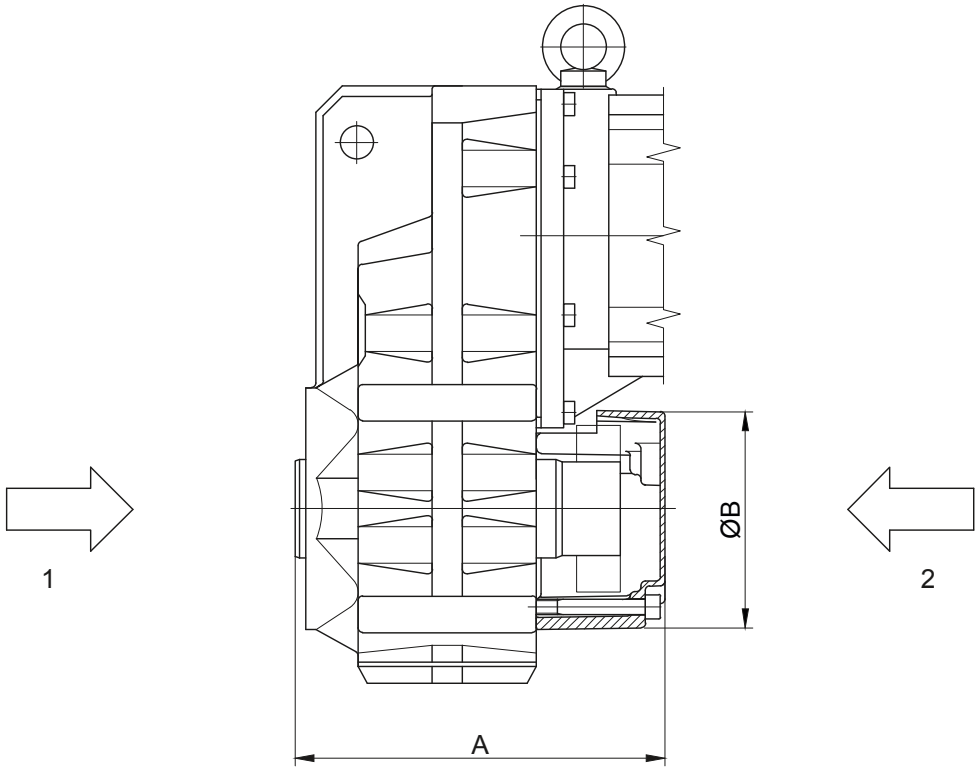

1 Gear side FRONT (V)
2 Gear side REAR (H)

Type	SSV Ringfeder	SSV STÜWE	A	B
BF10	RfN 4161 036x072	HSD 36-22x36	174	120
BF20	RfN 4161 044x080	HSD 44-22x44	211	140
BF30	RfN 4161 050x090	HSD 50-22x50	223	140
BF40	RfN 4161 062x110	HSD 62-22x62	245	160
BF50	RfN 4161 068x115	HSD 68-22x68	227	200
BF60	RfN 4161 080x141	HSD 80-22x80	290	210
BF70	RfN 4161 105x185	HSD 110-22x105	359	250
BF80	RfN 4161 130x215	HSD 125-22x130	463	300
BF90	RfN 4161 150x263	HSD 155-22x150	557	350
Dimensions in millimetres (mm)				

The actual gearbox design can vary from the geometry shown. Generate drive specific 3D and 2D geometries under www.BauerCat.com.

Tapped Holes Side (H) → Shaft Cover

BF10 to BF70

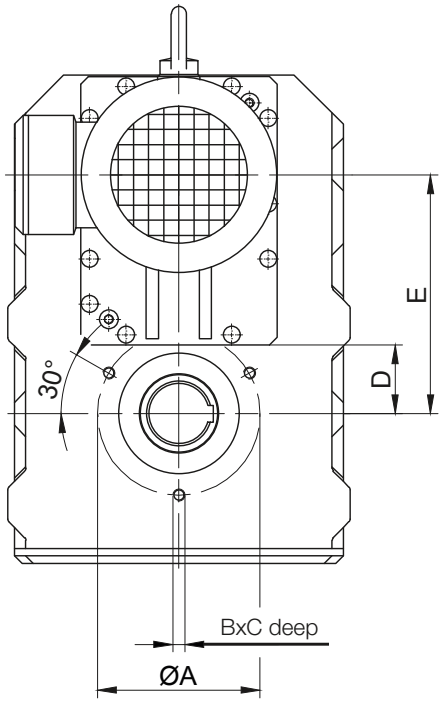

BF80 BF90

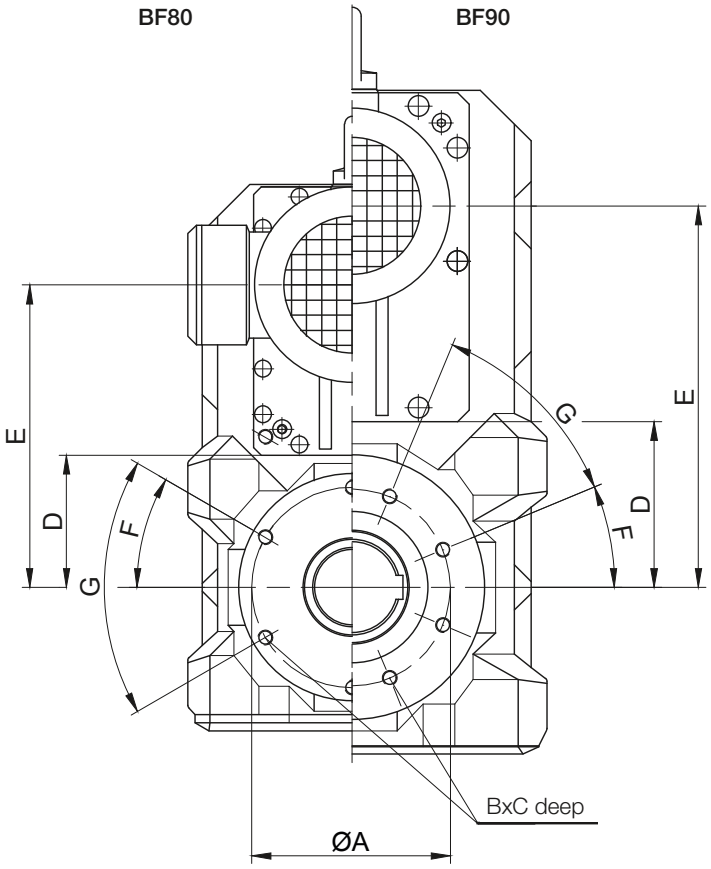

11

Gear	A	B	C	D	E	F	G
BF10	100	M8	16	35	118	-	-
BF20	115	M10	20	39	136	-	-
BF30	115	M10	20	44	157	-	-
BF40	130	M10	20	52	180.5	-	-
BF50	165	M12	24	60	207	-	-
BF60	180	M12	24	69	255,5	-	-
BF70	215	M16	32	89	316	-	-
BF80	265	M20	40	173	400	30°	6x60°
BF90	300	M20	40	219	504.5	22.5°	8x45°
Dimensions in millimetres (mm)							

The actual gearbox design can vary from the geometry shown. Generate drive specific 3D and 2D geometries under www.BauerCat.com.

Rubber buffer for torque restraint

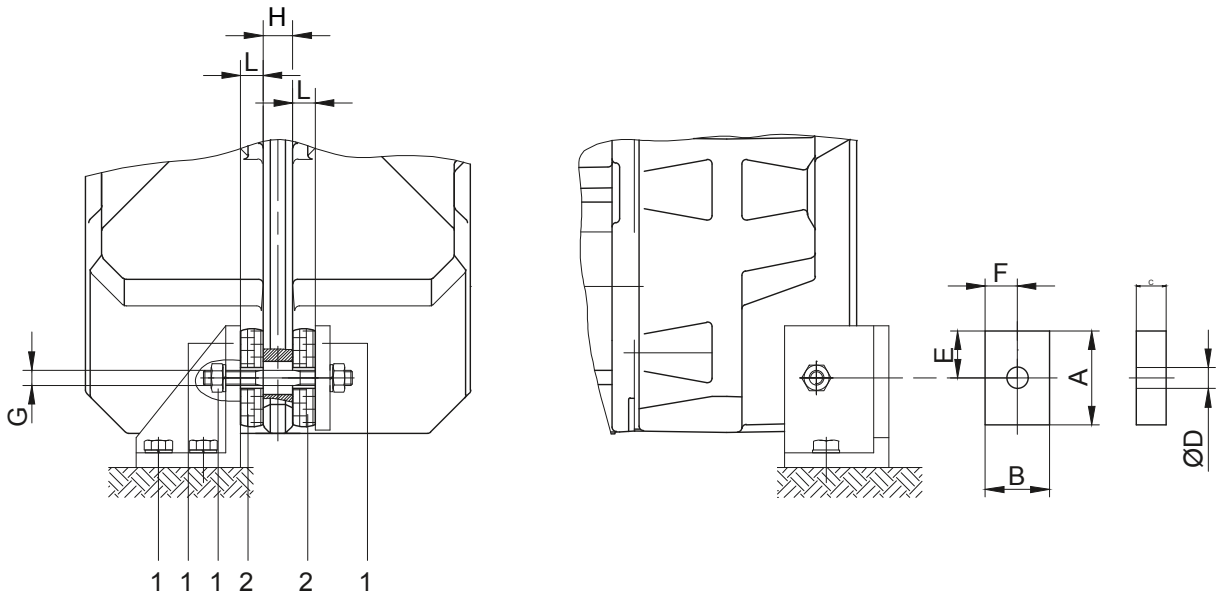

1 not included in delivery
2 Rubber buffers pretensioned

G maximaler Schraubendurchmesser

Material: Natural rubber Hardness 50 +/-5 Shore A
Dimensions of the transverse hole: See dimensioned sketch of the respective shaft mounted gearbox

Gear	Position	A	B	C	D	E	F	G	H	L
BF06	0	30	30	12	12	15	15	M10	10	10
BF10	1	48	32	15	14	24	16	M10	16	13.5
BF20	1	48	32	15	14	24	16	M10	18	13
BF30	2	63	43	20	14	31.5	21.5	M10	18	17
BF40	2	63	43	20	14	31.5	21.5	M10	20	16.5
BF50	3	88	60	25	22	44	30	M18	24	21.5
BF60	3	88	60	25	22	44	30	M18	28	21
BF70	4	123	88	30	26	61.5	44	M20	30	25.5
BF80	5	133	103	35	26	66.5	51.5	M20	40	30
BF90	5	133	103	35	26	66.5	51.5	M20	50	29.5
Dimensions in millimetres (mm)										

The actual gearbox design can vary from the geometry shown. Generate drive specific 3D and 2D geometries under www.BauerCat.com.

Assembly tools for hollow shaft and keyway

Position 1 Shaft

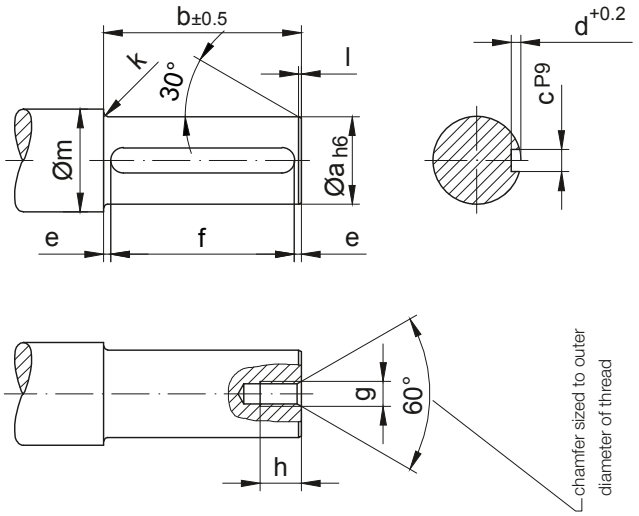

* Position 2 Disc

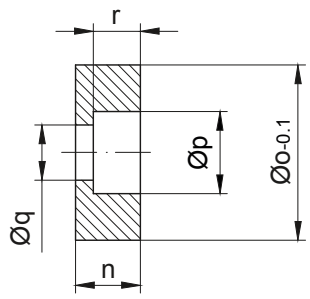

Material: Steel, tensile strength ≥ 470 N/mm²

Type	Dimensions (mm)															
	Postion 1 Shaft											Postion 2 Disc				
	a	b	c	d	e	f	g	h	k	l	m	n	o	p	q	r
BF06	25	70	8	4	3.5	$63^{+0.5}$	M8	18	2	1.5	33	13.5	24.8	15	9	8.5
BF10	25	102	8	4	6	$90^{+0.5}$	M8	18	2.5	1.5	33	13.5	24.8	15	9	8.5
BF20	30	108	8	4	9	$90^{+0.5}$	M10	20	3	1.5	38	15	29.8	18	11	10
BF30	35	118	10	5	9	$100^{+0.5}$	M10	20	3	1.5	43	16	34.8	18	11	10
BF40	40	141	12	5	8	$125^{+0.5}$	M12	22	3	2	48	18	39.8	20	13.5	12
BF50	50	148	14	5.5	11.5	$125^{+0.5}$	M16	30	3.5	2	58	21	49.8	26	17.5	15
BF60	60	173	18	7	6.5	$160^{+0.5}$	M20	38	3.5	2	68	24	59.8	33	22	18
BF70	80	205	22	9	12.5	$180^{+0.5}$	M20	38	4	2	90	27	79.8	33	22	20
BF70-K70	70	205	20	7.5	12.5	$180^{+0.5}$	M20	38	4	2	90	27	69.8	33	22	20
BF80	100	317	28	10	18.5	$280^{+0.5}$	M24	45	4	3	110	32	99.8	40	26	25
BF90	120	383	32	11	11.5	$360^{+0.5}$	M24	45	4.5	3	130	35	119.8	40	26	28

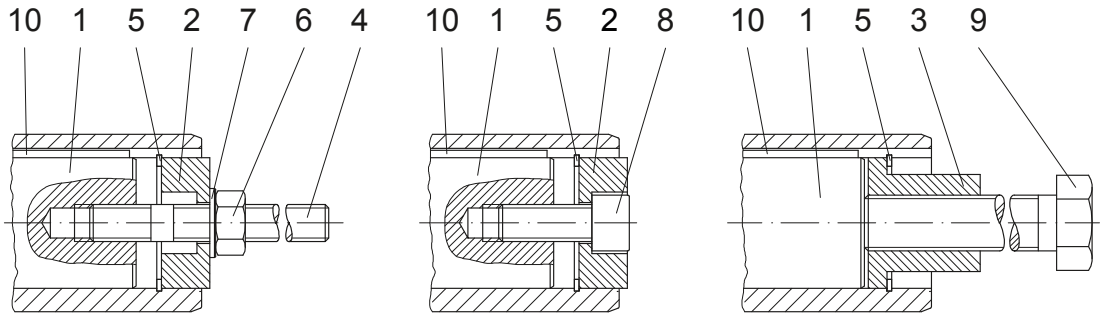

Installation Holding Dismantlement

The parts shown are neccessary for assembly. ONLY * specified parts are enclosed in the assembly kit.
Suitable measures are to be used to secure Bolt Pos. 8 against loosening!

The actual gearbox design can vary from the geometry shown. Generate drive specific 3D and 2D geometries under www.BauerCat.com.

Assembly tools for hollow shaft and keyway

Position 3 Sleeve

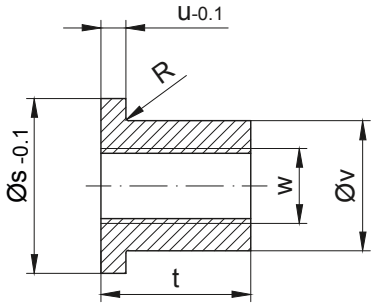

Material: Steel, tensile strength ≥ 470 N/mm²

* Position 4 Stud bolt

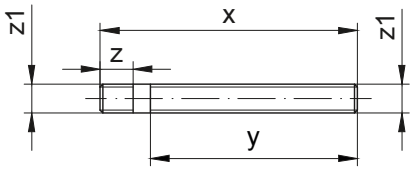

Material: Steel, tensile strength ≥ 1000 N/mm² Thread rolled

Type	Dimensions (mm)										* Retaining ring DIN 472	Hexagon nut DIN 394-8	Disc DIN 125-St	* Filister head screw DIN 912-8.8	Tightening torques (Nm)	Hexagon bolt DIN EN 24017-8.8	Key DIN 6885 Width/Height/Length
	Position 3 Sleeve						Position 4 Stud bolt										
	s	t	u	v	w	R	x	y	z	z1	Pos.5	Pos.6	Pos.7	Pos.8		Pos.9	Pos.10
BF06	24.8	24	5	15.4	M12	0.8	160	130	20	M8	25x1.2	M8	8.4	M8x30	5	M12x110	A 8x7x63
BF10	24.8	24	5	15.4	M12	0.8	160	130	20	M8	25x1.2	M8	8.4	M8x30		M12x140	A 8x7x90
BF20	29.8	28	5	19.8	M14	0.8	170	135	23	M10	30x1.2	M10	10.5	M10x30	8	M14x150	A 8x7x90
BF30	34.8	28	5	23	M14	-	180	145	23	M10	35x1.5	M10	10.5	M10x35		M14x160	A 10x8x100
BF40	39.8	40	6	27.7	M20	0.8	210	170	28	M12	40x1.75	M12	13	M12x35	16	M20x200	A 12x8x125
BF50	49.8	48	6	36	M24	-	230	175	37	M16	50x2.0	M16	17	M16x40	30	M24x210	A 14x9x125
BF60	59.8	60	6	44	M30	-	270	205	45	M20	60x2.0	M20	21	M20x50	42	M30x250	A 18x11x160
BF70	79.8	60	8	55	M30	-	310	240	45	M20	80x2.5	M20	21	M20x50		M30x280	A 22x14x180
BF70-K70	69.8	60	8	53	M30	-	310	240	45	M20	70x2.5	M20	21	M20x50		M30x280	A 20x12x180
BF80	99.8	72	10	75	M36	-	440	360	55	M24	100x3.0	M24	25	M24x60	100	M36x410	A 28x16x280
BF90	119.8	72	10	80	M36	-	510	430	55	M24	120x4.0	M24	25	M24x60		M36x480	A 32x18x360

The parts shown are neccessary for assembly. ONLY * specified parts are enclosed in the assembly kit.
Suitable measures are to be used to secure Bolt Pos. 8 against loosening!

Optional

Type	Assembly tool „Holding“
BF06	Id.Nr. 4103921
BF10	Id.Nr. 4103921
BF20	Id.Nr. 4103939
BF30	Id.Nr. 4103947
BF40	Id.Nr. 4103955
BF50	Id.Nr. 4103963
BF60	Id.Nr. 4103971
BF70	Id.Nr. 4103980
BF70-K70	Id.Nr. 4104765
BF80	Id.Nr. 4103998
BF90	Id.Nr. 4104005

The actual gearbox design can vary from the geometry shown. Generate drive specific 3D and 2D geometries under www.BauerCat.com.

Assembly tools for shaft mounted gears with splined shaft

Position 1 Shaft

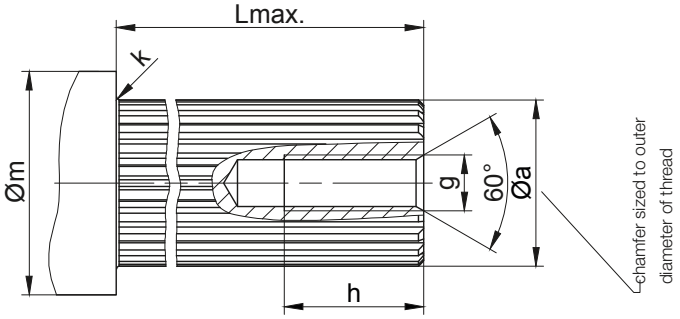

* Position 2 Disc

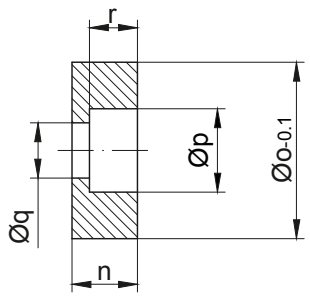

Material: Steel, tensile strength ≥ 470 N/mm²

Type	Dimensions (mm)										
	Postion 1 Shaft						Postion 2 Disc				
	a	g	h	g	$L_{max.}$	m	n	o	p	q	r
BF06	DIN 5480-W25x1.25x18x8f	M8	20	2	70	37	13	29.9	15	9	8
BF10	DIN 5480-W30x1.25x22x8f	M10	25	2.5	100	38	15	30.4	18	11	10
BF20	DIN 5480-W35x2x16x8f	M10	25	3	110	43	14	35.9	18	11	10
BF30	DIN 5480-W40x2x18x8f	M12	30	3	117	48	18	40.9	20	13.5	12
BF40	DIN 5480-W50x2x24x8f	M16	35	3	145	60	17.5	50.9	26	17.5	12.5
BF50	DIN 5480-W60x2x28x8f	M20	40	3.5	150	69	24	60.9	33	22	18
BF60	DIN 5480-W70x2x34x8f	M20	40	3.5	175	80	24	71.9	33	22	18
BF70	DIN 5480-W85x3x27x8f	M20	40	4	215	96	22	85.9	33	22	16
BF80	DIN 5480-W110x3x35x8f	M24	50	4	315	122	32	111.9	40	26	25
BF90	DIN 5480-W130x5x24x8f	M24	50	4.5	390	141	25	131.4	40	26	18

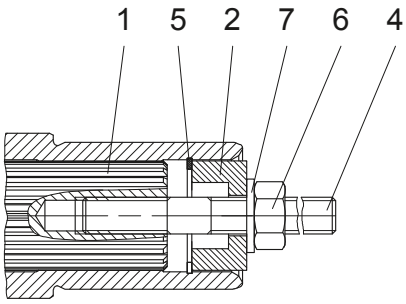

Installation

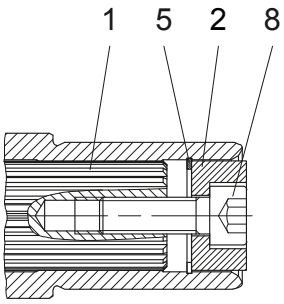

Holding

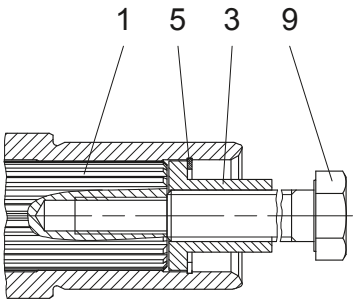

Dismantlement

The parts shown are neccessary for assembly. ONLY * specified parts are enclosed in the assembly kit.
Suitable measures are to be used to secure Bolt Pos. 8 against loosening!

The actual gearbox design can vary from the geometry shown. Generate drive specific 3D and 2D geometries under www.BauerCat.com.

Assembly tools for shaft mounted gears with splined shaft

Position 3 Sleeve

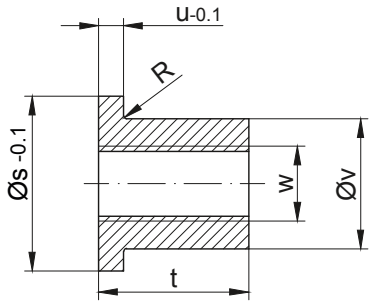

Material: Steel, tensile strength ≥ 470 N/mm²

* Position 4 Stud bolt

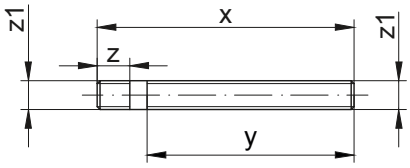

Material: Steel, tensile strength ≥ 1000 N/mm² Thread rolled

Type	Dimensions (mm)										* Retaining ring DIN 472	Hexagon nut DIN 394-8	Disc DIN 125-St	* Filister head screw DIN 912-8.8	Starting torque (Nm)	Hexagon bolt DIN EN 24017-8.8
	Position 3 Sleeve						Position 4 Stud bolt									
	s	t	u	v	w	R	x	y	z	z1	Pos.5	Pos.6	Pos.7	Pos.8		Pos.9
BF06	29.9	24	5	15.4	M12	0.8	160	130	20	M8	30x1.2	M8	8.4	M8x30	5	M12x110
BF10	30.4	28	5	19.8	M14	-	170	135	23	M10	30x1.2	M10	10.5	M10x30	8	M14x150
BF20	35.9	28	5	23	M14	-	180	145	23	M10	35x1.5	M10	10.5	M10x35		M14x160
BF30	40.9	40	6	27.7	M20	-	210	170	28	M12	40x1.75	M12	13	M12x35	16	M20x200
BF40	50.9	48	6	36	M24	0.8	230	175	37	M16	50x2.0	M16	17	M16x40	30	M24x210
BF50	60.9	60	6	44	M30	-	270	205	45	M20	60x2.0	M20	21	M20x50	42	M30x250
BF60	71.9	60	6	53	M30	0.8	310	240	45	M20	72x2.5	M20	21	M20x50		M20x280
BF70	85.9	60	8	65	M30	0.8	310	240	45	M20	85x3	M20	21	M20x50		M30x280
BF80	111.9	72	10	85	M36	0.8	440	360	55	M24	112x4	M24	25	M24x60	100	M36x410
BF90	131.4	72	10	95	M36	0.8	510	430	55	M24	130x4	M24	25	M24x60		M36x480

The parts shown are neccessary for assembly. ONLY * specified parts are enclosed in the assembly kit.
Suitable measures are to be used to secure Bolt Pos. 8 against loosening!

Optional

Type	Assembly tool „Holding“
BF06	Id.Nr. 4105125
BF10	Id.Nr. 4105133
BF20	Id.Nr. 4105141
BF30	Id.Nr. 4105150
BF40	Id.Nr. 4105168
BF50	Id.Nr. 4105176
BF60	Id.Nr. 4105184
BF70	Id.Nr. 4105192
BF80	Id.Nr. 4105206
BF90	Id.Nr. 4105214

The actual gearbox design can vary from the geometry shown. Generate drive specific 3D and 2D geometries under www.BauerCat.com.

Shaft cap (VK)

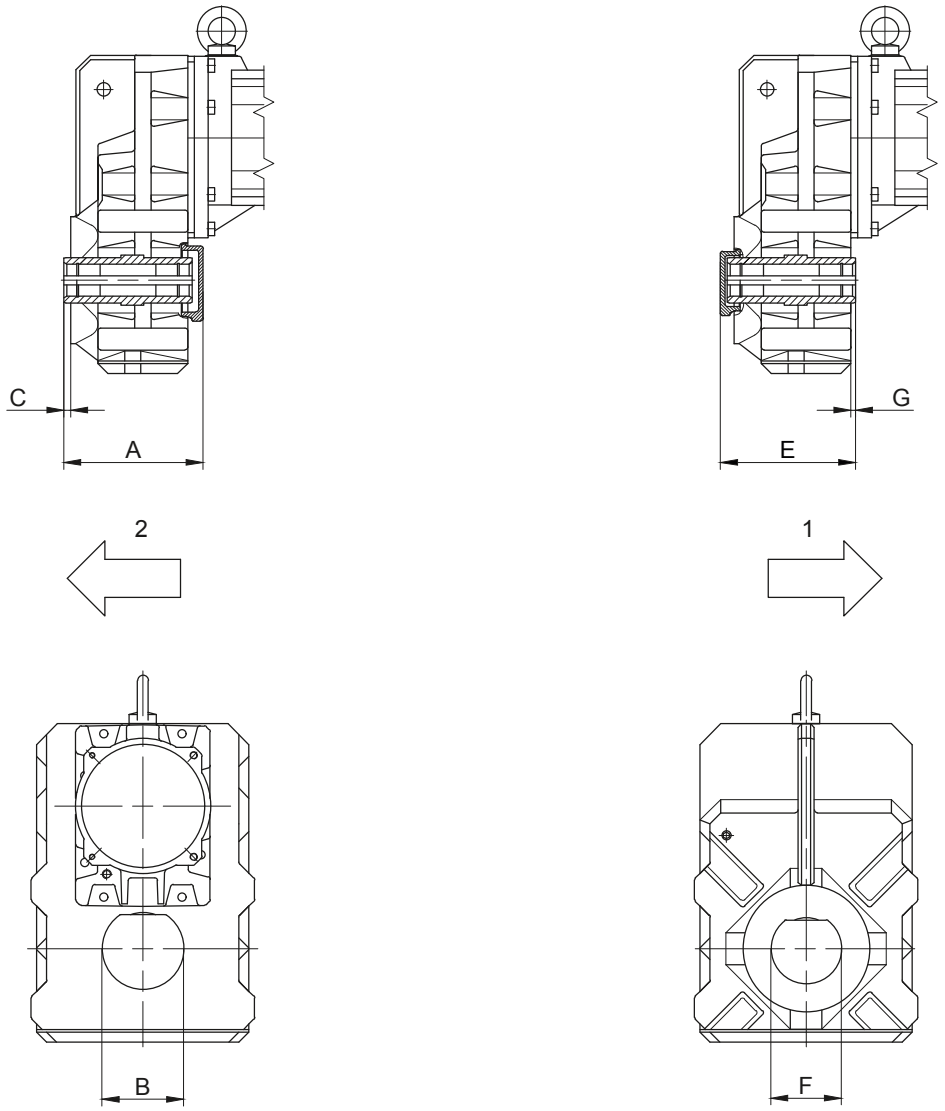

1 Gear side FRONT (V)
2 Gear side REAR (H)

Shaft cap REAR (H)			
Type	A	B	C
BF10	134	78	5
BF20	142	85	5
BF30	153.5	90	7.5
BF40	179.5	110	7
BF50	192	125	6
BF60	222	140	7
BF70	258	170	6
Dimensions in millimetres (mm)			

Shaft cap FRONT (V)			
Type	E	F	G
BF30	149	78	7.5
BF50	189.5	110	6
BF70	262	130	6
Dimensions in millimetres (mm)			

The actual gearbox design can vary from the geometry shown. Generate drive specific 3D and 2D geometries under www.BauerCat.com.

Shaft cover (VD)

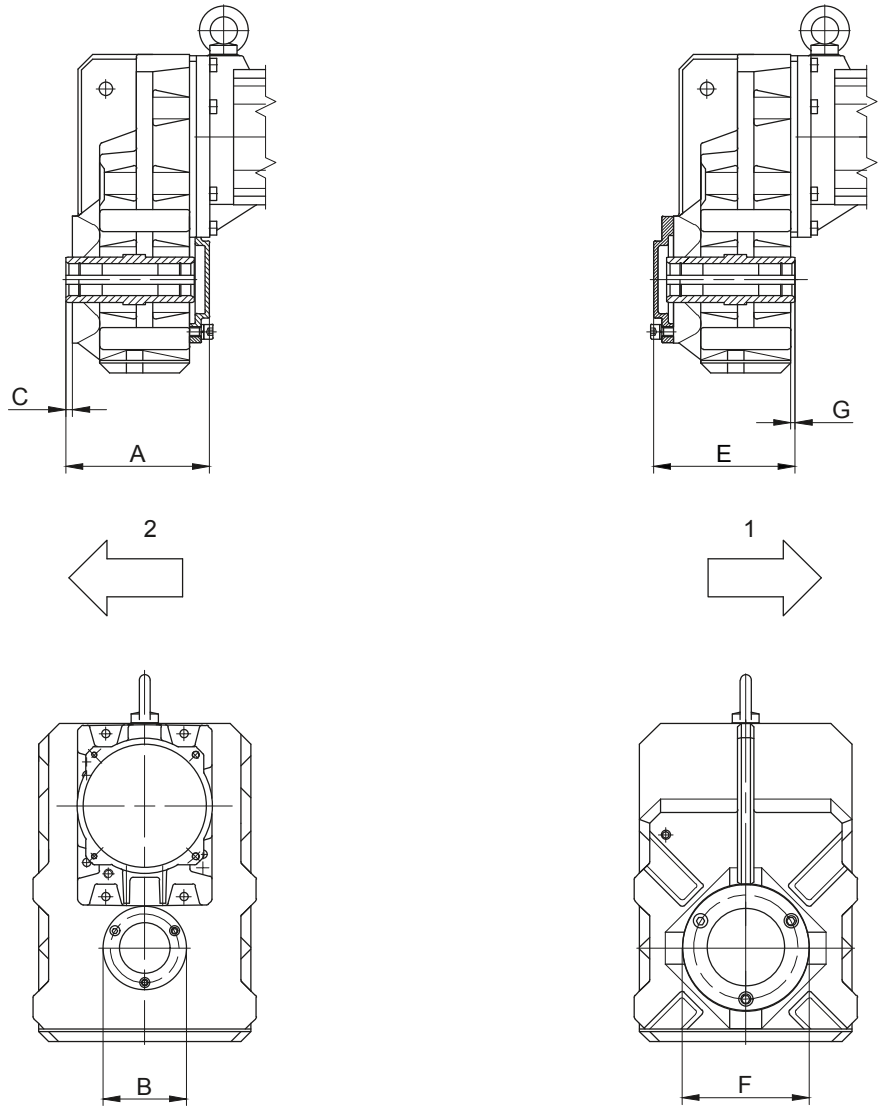

1 Gear side FRONT (V)
2 Gear side REAR (H)

Shaft cover REAR (H)			
Type	A	B	C
BF70	376	300	8
BF90	442	350	8
Dimensions in millimetres (mm)			

Shaft cover FRONT (V)			
Type	E	F	G
BF10	135.5	120	5
BF20	144	139.5	5
BF30	153	139.5	7.5
BF40	179.5	160	7
BF50	191.5	199	6
BF60	221.5	210	7
BF70	258	250	6
BF80	376	300	8
BF90	442	350	8
Dimensions in millimetres (mm)			

The actual gearbox design can vary from the geometry shown. Generate drive specific 3D and 2D geometries under www.BauerCat.com.