BAUER GEAR MOTOR™

PRODUCT CATALOG



ENERGY EFFICIENT GEARED MOTORS

AC LINE OPERATED

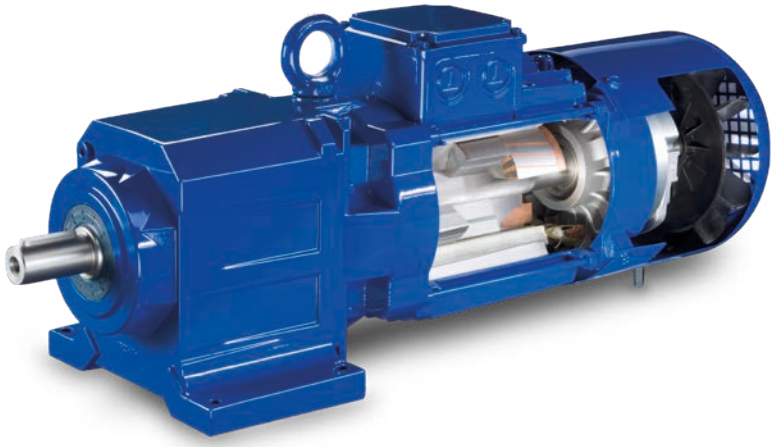

RegalRexnord™

Type Designations

BK 50 Z - 1 1 U W A / D.. 09L A 4 - TF - S / ES 010 A 9 HN / C2

B K 50 Z X - 1 1 U W A

- A = SSV Cover
- W = Double Shaft Seals
- V H = Front and Rear
- V = Flange A or C or Torque Arm front
- H = Flange A or C or screw-on Torque Arm rear
- U = Foot on down or Torque Arm screwed on in upward direction
- O = Foot on top or Torque Arm screwed on in upward direction
- R = Foot right or Torque Arm screwed on in the direction to the right
- L = Foot left or Torque Arm screwed in direction to the left

- 0 = Splined Shaft acc. to DIN 5480
- 1 = Solid Shaft, front
- 2 = Solid Shaft, rear
- 3 = Solid Shaft, front and rear
- 4 = Hollow Shaft with Keyway
- 5 = Hollow Shaft for Shrink disk connection, rear (Standard)
- 6 = Hollow Shaft for Shrink disk connection, front (Special)
- 7 = Solid Shaft front, flush with Standard-Flange only BG10-BG90 and BS02+BS03
- 8 = Solid Shaft rear, flush with Standard-Flange only BS02+BS03
- 9 = Solid Shaft front and rear, flush with Standard-Flange only BS02+BS03

- 0 = Gear Housing, no surfaces except torque arm bore for BF
- 1 = Gear Housing, Foot
- 2 = Gear Housing, Standard flange diameter 1 small A-Flange
- 3 = Gear Housing, Standard flange diameter 2 Standard A-Flange
- 4 = Gear Housing, Standard flange diameter 3 large A-Flange
- 5 = Gear Housing, with Torque Arm for BK + BS as screw-on
- 6 = Gear Housing, Foot-threaded bores
- 7 = Gear Housing, C - Flange
- 8 = Gear Housing, completely machined
- 9 = Gear Housing, with Footplate only BG (Universal housing)

- \- = seperates gear type from gear design
- X = reinforced bearings (radial)
- Z = Gearbox with pre-stage
- •• = Gear Size (03, 04, 05, 06, 10, 15, 20, 30, 40, 50, 60, 70, 80, 90, 100)

B • = Gear type (BG, BF, BK, BS)

D .. 09 L A 4 - TF - S

- S = rectifier (see chapter 3)
- TF = Motor monitoring (see chapter 3)
- 4 = No. of pole for motor
- LA = Motor core length and design
- 09 = Motor size
- .. = A Aseptic motor
- .. = NF Motor without Gearbox, Motor in flange design
- .. = PE Three-Phase Motor with increased efficiency acc. to IE3

D = Three-Phase Motor

ES 010 A 9 HN

- HA = Hand Release (lockable)
- HN = Hand Release (none lockable)
- 9 = Code for setting torque
- A = Design
- 010 = Brake size

ES = Single disk brakes - HOLDING BRAKE
ZS = Double disk brakes - HOLDING BRAKE
ESX = Single disk brakes - WORKING BRAKE
ZSX = Double disk brakes - WORKING BRAKE

Table of contents

1 General 15
Advantages of Bauer-Geared Motors ... 17
Bauer Gearmotors ... 17
Bauer Gearboxes ... 17
Bauer Motors ... 17
Bauer Brakes ... 17

2 Product Description 19
Selection of geared motors ... 21
Installed positions of geared motors ... 21
Notes on safety ... 21
Guards for rotating parts ... 21
Touch protection ... 21
Operating noise ... 21
Painting and corrosion protection ... 21
Modular system overview ... 22

3 Type Designations 25
Significance of type designation ... 27
BG-series helical-geared motor ... 28
BF-series shaft-mounted geared motor ... 29
BK-series bevel-geared motor ... 30
BS-series worm-geared motor ... 31
Versions and options ... 32
BG and BF series ... 32
BK and BS series ... 32
General construction ... 33
Three-phase motor ... 33
Motor protection ... 33
Brake rectifier in motor terminal box ... 33
Plug connector ... 33
Heavy-duty fan ... 33
Protective cover ... 33
CleanDrive ... 33
Supplement types ... 34
Brake ... 34
Reverse rotation block ... 34
Digital and analogue encoder ... 34
Second shaft end ... 34
Forced ventilation ... 34
Overall design ... 34

4 Gear Motor Selection 35
Selection of geared motors ... 37
Drive configuration ... 38
Drive configuration General ... 38
Required data for drive configuration ... 38
Determining the motor power ... 39
Determining the required torque ... 39
Determining the gear reduction ratio ... 39
Determining the factor of inertia ... 39
Drive configuration ... 40
Determining the shock load ... 40
Determining the minimum service factor f_{Bmin} ... 40
Brake specification ... 40
Torque–speed characteristic ... 41
Motor configuration ... 42
Dynamic power ... 42
Static power ... 42
Total power P_G ... 42
Motor selection ... 43
IE2 ... 43
IE1 ... 43

Energy Efficient Geared Motors

Table of contents

No-load cycle rate Z_0 44
Load factor K_L 44
Radial and axial forces on the output shaft 45
Radial and axial forces on the output shaft 45
Maximum allowable radial force at force application point X 45
Bearing load limit 45
Shaft strength 46
Helical gear unit BG series 46
Shaft-mounted gear unit BF series 47
Bevel gear unit BK series 48
Worm gear unit BS series 48
Transmission components 49
Factor f_z for the type of transmission component 49
Axial force 49
Sizing based on efficiency 50
Drive configuration based on efficiency 50
Savings potential Motor: η_{motor} 50
Calculation of the efficiency under partial load 50
Gear efficiency η_{gear} 51
System efficiency η_{system} 51
Shock loads of machinery 52

5 Gearboxes & Lubrication 55
Standard mounting positions 57
Postion of the terminal box 59
Position of the terminal box and the cable entry points (BG and BF) 59
Position of the terminal box and the cable entry points (BK and BS) 60
Gearboxes 61
Radial and axial forces at the output shaft 61
Dimensions and fits of output shafts and keyways 61
Installing transmission elements 62
Gear with solid shaft 62
Gear with hollow shaft 62
Shrink disc coupling 62
Torque restraint 63
Notes for installing shaft mount gears with hollow shaft and keyway 63
Gear ventilation 63
Output shaft seals 63
Lubricants 64
Lubricant quantities 65
Lubricant quantities, BG-series gears 66
Lubricant quantities, BG20-01R 67
Lubricant quantities, BF-series gears 68
Lubricant quantities, BK-series gears 69
Lubricant quantities, BS-series gears 70
Lubricant quantities, pre-stage gears (Z) 71
Lubrication quantity for intermediate gear 72
Threaded plugs 73
Position of threaded plugs 73
-BG-series gears 73
-BG-20-01R 74
-BF-series gears 75
-BK-series gears 76
-BS-series gears 77
-pre-stage gears (Z) 78
-in the System Cover Design with Standard Geared Motor 79
-in the System Cover Design with foreign motor or gear design with input shaft 80
-in the System Cover Design with pre-stage Z 81

6 BG-series helical-geared motors - Selection 83
Description of helical-geared units 85
Sizes 85
Bauer service factors (f_B) for helical-geared motors 85
Continuous operation without switching frequency Z ≤1/h 85
Switching duty 85
Bauer service factor 85
Explanation of shock classification 86

Key to abbreviations 86
Selection tables, helical-geared motors 86
Selection helical-geared motors DSE - IE1 87
Selection helical-geared motors DHE - IE2 129
Selection helical-geared motors DPE - IE3 174

7 BF-series shaft-mounted geared motors - Selection 219
Description of shaft-mounted gear units 221
Sizes 221
Bauer service factors (f_B) for shaft-mounted geared motors 221
Continuous operation without switching frequency Z ≤1/h 221
Switching duty 221
Bauer service factor 221
Explanation of shock classification 221
Key to abbreviations 222
Selection tables, shaft-mounted geared motors 222
Selection - shaft-mounted geared motors DSE - IE1 223
Selection - shaft-mounted geared motors DHE - IE2 255
Selection - shaft-mounted geared motors DPE - IE3 289

8 BK-series bevel-geared motors - Selection 323
Description of bevel-gear units 325
Sizes 325
Bauer service factors (f_B) for bevel-geared motors 325
Continuous operation without switching frequency Z ≤1/h 325
Switching duty 325
Bauer Service factor 325
Explanation of shock classification 326
Key to abbreviations 326
Selection tables, bevel-geared motors 326
Selection - bevel geared motors DSE - IE1 327
Selection - bevel geared motors DHE - IE2 355
Selection - bevel geared motors DPE - IE3 385

9 BS-series worm-geared motors - Selection 415
Description of worm-gear units 417
Sizes 417
Efficiency 417
Bauer service factors (f_B) for worm-geared motors 417
Continuous operation without switching frequency Z ≤1/h 417
Switching duty 418
Ambient temperature 418
Bauer service factor 418
Explanation of shock classification 418
Key to abbreviations 419
Selection tables, worm-geared motors 419
Selection - worm-geared motors DSE - IE1 420
Selection - worm-geared motors DHE - IE2 439
Selection - worm-geared motors DPE - IE3 458

10 BG-series helical-geared motors - Dimensions 477
Dimension - Standard 479
BG04 479
BG05 480
BG06 481
BG10-BG10Z 482
BG10X-BG10XZ 484
BG15 487
BG20-BG20Z 488
BG30-BG30Z 490
BG40-BG40Z 492
BG50-BG50Z 494
BG60-BG60Z 496
BG70-BG70Z 498
BG80-BG80Z 500
BG90-BG90Z 502

Table of contents

BG100-BG100Z 504
Dimension - Tandem Gearbox 507
BG06G04 507
BG10G06 508
BG10XG06 510
BG20G06 512
BG30G06 514
BG40G10 516
BG50G10 518
BG60G20 520
BG70G20 522
BG80G40 524
BG90G50 526
BG100G50 528

11 BF-series shaft-mounted geared motors - Dimensions 531
Dimension - Standard 532
BF06 532
BF10-BF10Z 534
BF20-BF20Z 536
BF30-BF30Z 538
BF40-BF40Z 540
BF50-BF50Z 542
BF60-BF60Z 544
BF70-BF70Z 546
BF80-BF80Z 548
BF90-BF90Z 550
Dimension - Tandem Gearbox 552
BF10G06 552
BF20G06 554
BF30G06 556
BF40G10 558
BF50G10 560
BF60G20 562
BF70G20 564
BF80G40 566
BF90G50 568
Additional Dimension Sheet 571
Splined shaft 571
Shrink disc coupling (SSV) 572
Shrink disc coupling with (SSV) cover 573
Tapped Holes Side (H) → Shaft Cover 574
Rubber buffer for torque restraint 575
Assembly tools for hollow shaft and keyway 576
Assembly tools for shaft mounted gears with splined shaft 578
Shaft Cap (VK) 580
Shaft Cover (VD) 581

12 BK-series bevel-geared motors - Dimensions 583
Dimension - Standard 584
BK06 584
BK08 586
BK10-BK10Z 588
BK17 590
BK20-BK20Z 592
BK30-BK30Z 594
BK40-BK40Z 596
BK50-BK50Z 598
BK60-BK60Z 600
BK70-BK70Z 602
BK80-BK80Z 604
BK90-BK90Z 606
Dimension - Tandem Gearbox 608
BK10G06 608
BK20G06 610
BK30G06 612
BK40G10 614

BK50G10 616
BK60G20 618
BK70G20 620
BK80G40 622
BK90G50 624
Additional Dimension Sheet 627
Splined shaft 627
Shrink disc couplings (SSV) 628
Shrink Disk Connection with Cover (SSV) 629
Rubber buffer for torque restraint 630
Position of the torque arm 631
Foot with tapped holes 632
Foot plate with clearance holes 633
Assembly tools for hollow shaft and keyway 634
Assembly tools for splined shaft 636
Shaft Cap (VK) 638
Shaft Cover (VD) 639

13 BS-series worm-geared motors - Dimensions 641
Dimension - Standard 642
BS02 642
BS03 644
BS04 646
BS06 648
BS10-BS10Z 650
BS20-BS20Z 652
BS30-BS30Z 654
BS40-BS40Z 656
Dimension - Tandem Gearbox 658
BS06G04 658
BS10G06 660
BS20G06 662
BS30G06 664
BS40G10 666
Additional Dimension Sheet 668
Shrink disc couplings (SSV) 668
Shrink disc couplings with (SSV) cover 669
Rubber buffer for torque restraint 670
Position of the torque arm 671
Threaded foot 672
Foot plate, left 673
Assembly tools for hollow shaft and keyway 674
Shaft Cap (VK) 676
Shaft Cover (VD) 677

14 Motors 679
General 681
ErP Directive 2009/125/EC 681
Regulation (EU) 2019/1781 682
Torques 684
Line voltages 684
Line frequencies 685
Rating plate 685
Terminal box 685
Motor connections 686
Terminal connections for single speed motors 687
Terminal connections for single speed motors with thermal motor protection 688
Terminal connections for pole changing motors in Dahlander connection (Δ/YY or Y/YY) 689
Terminal connections for pole changing motors with two separate windings (Y/Y or Δ/Δ) 690
Plug-and-socket connection 691
Motor protection 692
Thermistors (PTC) 692
Thermostatic protection 693
KTY sensors 694
PT100 sensors 695
Insulation 696
IP – Protection classes 696

Energy Efficient Geared Motors

Table of contents

Degrees of protection provided by enclosures for electrical equipment ... 696
Speed of output shaft ... 697
Duty types as defined by EN 60034 ... 698
General ... 698
Continuous running duty (S1) ... 698
Short-time duty (S2) ... 698
Intermittent periodic duty (S3) ... 699
Intermittent periodic duty with starting (S4) ... 700
Intermittent periodic duty with electric braking (S5) ... 701
Continuous-operation periodic duty (S6) ... 702
Continuous-operation periodic duty with electric braking (S7) ... 702
Continuous-operation periodic duty with relative load/speed changes (S8) ... 703
Duty with non-periodic load and speed variations (S9) ... 703
Duty with discreet constant loads and speeds (S10) ... 704
Operation with frequency converter ... 705
Notes on design ... 705
Increased torque with reduced duty factor ... 705
Increased torque with external fan ... 705
Energy-saving function ... 706
Regeneration ... 706
Notes on operation with other-make frequency inverters ... 706
Technical data ... 707
Technical data of the 50 Hz motors ... 707
4-pole IE1 motors for continuous operation S1, line frequency 50 Hz ... 707
4-pole IE2 motors for continuous operation S1, mains frequency 50 Hz ... 708
4-pole IE3 motors for continuous operation S1, mains frequency 50 Hz ... 709
4 pole motors for periodic duty S3/S6-75 %, Mains Frequency 50 Hz ... 710
4 pole motors for periodic duty S3/S6, Mains Frequency 50 Hz ... 711
4/2-pole Δ/YY motors for continuous running duty (S1) and 50 Hz mains frequency ... 712
8/4-pole Δ/YY motors for continuous running duty (S1) and 50 Hz mains frequency ... 713
8/2-pole Y/Y motors for intermittent periodic duty S3 25/75 % and 50 Hz mains frequency ... 714
12/2-pole Y/Y motors for intermittent periodic duty S3 25/75 % and 50 Hz mains frequency ... 715
Technical data of the 60 Hz motors ... 716
4-pole IE1 motors for continuous operation S1, mains frequency 60 Hz ... 716
4-pole IE2 motors for continuous operation S1, mains frequency 60 Hz ... 717
4-pole IE3 motors for continuous operation S1, mains frequency 60 Hz ... 718
4-pole motors for intermittent periodic duty (S3/S6 75 %) and 60 Hz mains frequency ... 719
4-pole motors for intermittent periodic duty (S3/S6) and 60 Hz mains frequency ... 720
4/2-pole motors Δ/YY for continuous operation S1, line frequency 60 Hz ... 721
8/4-pole motors Δ/YY for continuous operation S1, line frequency 60 Hz ... 722
8/2-pole Y/Y motors for intermittent periodic duty S3 25/75 % and 60 Hz mains frequency ... 723
12/2-pole motors Y/Y for intermittent periodic duty S3-25/75 %, line frequency 60 Hz ... 724
Operation with frequency converter, 50 Hz ... 726
IE1 Motor torques for frequency-converter range 5 Hz - 70 Hz, line frequency 50 Hz ... 726
IE1 Motor torques for frequency-converter range 5 Hz - 100 Hz, line frequency 50 Hz ... 727
IE2 Motor torques for frequency-converter range 5 Hz - 70 Hz, line frequency 50 Hz ... 728
IE2 Motor torques for frequency-converter range 5 Hz - 100 Hz, line frequency 50 Hz ... 729
IE3 Motor torques for frequency-converter range 5 Hz - 70 Hz. line frequency 50 Hz ... 730
IE3 Motor torques for frequency-converter range 5 Hz - 100 Hz, line frequency 50 Hz ... 731
Operation with frequency converter, 60 Hz ... 732
IE1 Motor torques for frequency-converter range 6 Hz - 84 Hz. line frequency 60 Hz ... 732
IE1 Motor torques for frequency-converter range 6 Hz - 120 Hz. line frequency 60 Hz ... 733
IE2 Motor torques for frequency-converter range 5 Hz - 80 Hz, line frequency 60 Hz ... 734
IE2 Motor torques for frequency-converter range 5 Hz - 120 Hz. line frequency 60 Hz ... 735
IE3 Motor torques for frequency-converter range 5 Hz - 80 Hz, line frequency 60 Hz ... 736
IE3 Motor torques for frequency-converter range 5 Hz - 120 Hz, line frequency 60 Hz ... 737

15 Motor Mounted Components 739
Brake ... 741
Functional description ... 741
Product description of type ES(X) spring-actuated brakes ... 741
Product description of type ZS(X) spring-actuated brakes ... 742
Brake selection and sizing ... 743
Electrical connection ... 746
Specifications of holding brakes with emergency stop capability ... 749
Specifications of working brakes ... 750
Connection ... 752

DC connection via terminals (K) 752
Standard rectifier (S) 753
Rectifier for electronic rapid shutdown (E) 754
Standard rectifier (M) 755
Brake connection, operation with frequency converter 757
Brake connection, pole-changing motors 757
Manual release (HA, HN) 757
Explosion protection 757
Back stop (RR, RL) 757
Second motor shaft extension (ZW, ZV) 758
Protective fan cowl (D) 758
Motor-independent fan (FV) 758
Technical Data Motor-independent fan 758
Encoder System 759
Shaft encoder (G) 759
Incremental rotary encoder 760
Functional description 760
Electrical specifications 760
Plug end view with male pin insert 760
Signal assignments 760
Absolute rotary encoders 761
Functional description 761
Profibus DP interface 761
SSI interface 762
Modular Motorsystem 763
Motor and encoder 763
Motor, brake and encoder 763
Motor and forced ventilation 763

16 Motor Mounted Components - Dimensions 765
Dimensions 767
Standard terminal box 767
Terminal box screwed on....768
Terminal box for plug-connector 769
Standard brake 770
“Heavy-Duty“ - brake 771
Motor with back stop 772
Motor with second shaft end 773
Motors with brake and second shaft end 774
Motor with “heavy duty“ brake and second shaft end 775
Motor with protective hood 776
Motor with independent fan 777
Motor with brake and independent fan 778
Motor with encoder with built-on independent fan 779
Motor with brake and encoder with built-on independent fan 780
Motor with encoder 781
Motor with “heavy duty“ encoder 782
Motor with brake and encoder 783
Motor with “heavy duty“ brake and encoder 784
Motor in IEC design 785

17 BAUER global 787
North America....789
Latin America....790
Europe 791
Eastern Europe....795
Middle East & Africa....796
APAC....798
China 799

Energy Efficient Geared Motors

Bauer Gear Motor - profile

Innovation since 1927

During its 90-year history, Bauer Gear Motor has developed to become the preferred international provider of high-quality and extremely reliable geared motors. A great deal of knowledge has been accrued over the decades, and this has continually been built upon and shared. Bauer has pioneered many new geared motor solutions and will continue to do so in the future. Our engineers develop technically-advanced solutions that feature energy-efficient motors paired with optimal gearboxes so that we can offer our customers the lowest possible operating costs. It is not without reason that the Bauer brand has become world famous; this is because our geared motor solutions are the driving power in drive technology.



Competent and customer-focused

We see ourselves as the value adding partner for individual drive technology solutions along the entire customer value chain **... Uncomplicated ... Competent ... Enduring**. With our global sales and expertise, we are there to support you side by side- right from the design of your drive. Our employees will ensure that you have the optimum geared motor solution for your application

Our quick response time to requests ensures that you receive the required offer within 24 hours. After your order has arrived, we check your order details and you will receive a confirmation of the order within 24 hours. This means that you will have the details for your own production planning process by the following day.

As we concentrate our production in regional factories, we are also able to deliver customised solutions from the factory reliably and directly, with an extremely short delivery period.

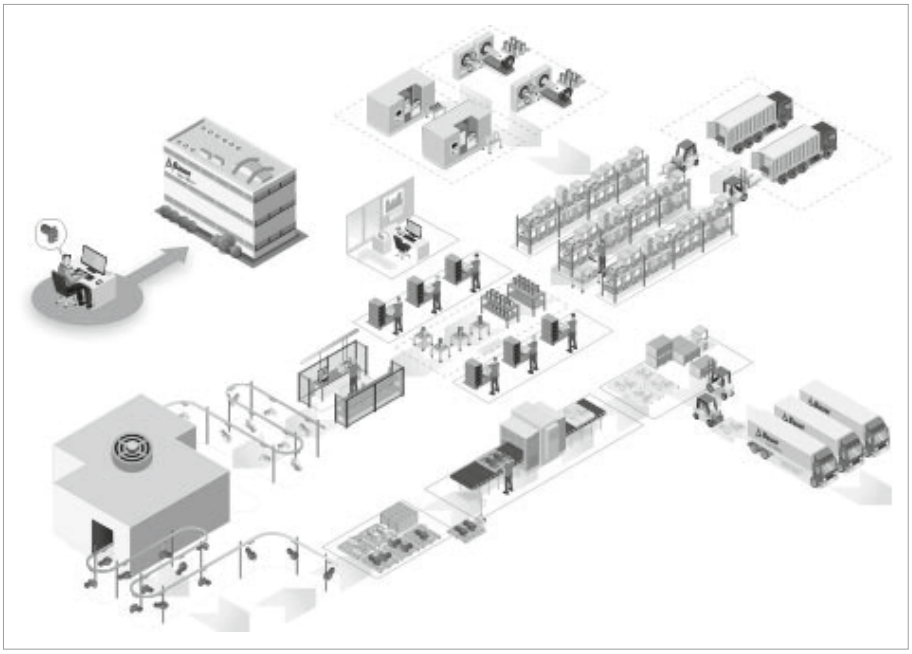

Closer to the customer‘s needs thanks to greater flexibility

Orders are processed immediately and passed on to our production team. By reducing set-up times, we are able to start producing the order specific parts right away. This is synchronised with assembly, ensuring that the parts are available according to just-in-time principles.

The entire manufacturing processes starting from the production of the motor, the mechanical geared motor parts and the electrical components, are perfectly coordinated to ensure greater process reliability and availability. This means that a high delivery reliability of over 95% can be achieved, while maintaining Bauer‘s high quality.

The product range



Energy Efficient Geared Motors

Bauer Gear Motor - profile

Helical Geared Motors

- Power range from 0.03 kW to 75 kW
- 13 gear sizes for torques ranging from 20 Nm to 18500 Nm
- New attachment possibilities with low design height
- High efficiency through 2-stage base design
- High protection rating of IP65 as standard

Shaft Mounted Geared Motors

- Power range from 0.03 kW to 75 kW
- 10 gear sizes for torques ranging from 90 Nm to 18500 Nm
- Gearbox housing with integral torque arm
- High efficiency through 2-stage base design
- High protection rating of IP65 as standard

Bevel Geared Motors

- Power range from 0.03 kW to 75 kW
- 10 gearbox sizes for torques ranging from 80 Nm to 18500 Nm
- Right angle with universal, space-saving mounting options
- High efficiency through 2-stage base design
- High protection rating of IP65 as standard

Worm Geared Motors

- Power range from 0.03 kW to 5.5 kW
- 8 gearbox sizes for torques ranging from 25 Nm to 1000 Nm
- Hollow shaft version available from 25 Nm
- Heavy duty worm gearing for a long service life
- High protection rating of IP65 as standard

Monorail Geared Motor Drives

- Torque rating from 30 Nm to 680 Nm
- Radial force up to 25,000 N
- Gearboxes with a wide range of mounting options
- High protection rating of IP65 as standard
- Improved efficiency
- low energy consumption - ideal for travel drives
- Reverse motion of gearbox possible with released brake

AsepticDRIVE

- Motor without cooling ribs and fan
- Available with helical, shaft-mounted, bevel and worm gearboxes
- Motor winding with thermistors and ISO class F as standard
- IP67 and IP69K protection ratings with alkali and acid-resistant coating as standard.
- Motor connection through standard, round stainless steel connector

CleanDRIVE

- Motor without cooling ribs and fan
- Available with helical, shaft-mounted, bevel and worm gearboxes
- Motor winding with thermistors and ISO class F as standard
- Motor connection through a standard terminal box or stainless steel cable gland

HiflexDRIVE

BK04 gearbox

- Torque	80 Nm
- Gear reductions	7.25 – 63.33

BK08 gearbox

- Torque	200 Nm
- Gear reductions	4.44 - 102.5

BK17 gearbox

- Torque	330 Nm
- Gear reductions	4.54 - 108.6

Motors

- Output power	0.12 kW ... 3.0 kW
- Efficiency classes	no rating and IE1 to IE4
- Enclosure	IP65 (standard) IP67 / IP69K (optional)

Energy-efficient motor solutions

Mains Supply

■ IE1 asynchronous technology	0.12 kW – 30 kW
■ IE2 asynchronous technology	0.12 kW – 22 kW
■ IE3 asynchronous technology	0.12 kW – 37 kW
■ IE4 asynchronous technology	0.55 kW – 4 kW

Inverter Duty

■ IE3 PMSM-technology	1.5 kW – 15 kW
■ IE4 PMSM-technology	0.55 kW – 11 kW

Energy-efficient motor solutions for explosion hazard areas

The S series in permanent magnet synchronous motors (PMSMs) offers variable-speed geared motors in efficiency class IE4 for use in explosion hazard areas[1].

■ Design torque M_N:	5 Nm – 48 Nm
■ Rated power P_N:	0.75 kW – 15 kW
■ Increased safety for zone 1	II 2 G Ex e IIC T1 - T3 Gb
■ Dust explosion protection – Zone 21	II 2 D Ex tb IIIC T 160°C ... 120° Db

[1] Individual motor designs can show lower efficiency classes than IE4 at rated torque.

EtaK2.0 Decentral Solutions

- PMSM enabled
- Integrated safety technology and field bus communication according to specific needs
- Modular structure minimises spare parts stock
- Energy savings of up to 30 % possible under partial load conditions
- Suited to extremely harsh environments thanks to IP65 enclosure rating
- 200 % overload current (3 s)
- Sensorless vector control
- CANopen, Profibus, Profinet, EtherCAT, EtherNet/IP and AS-Interface
- STO safety function

Energy Efficient Geared Motors

Bauer Gear Motor - profile

Submersible Solutions

- **Special sealing concepts** for maximum leakage protection
- **Reinforced bearings** for higher strength and longer service life
- **Shafts** available on request in V4A steel or coating
- **Motor Connection**
  - Standard with cast terminal box
  - Optional with special plug connection
- **Additional features**:
  - Special design for continuous submersible operation
  - Electronic leakage detection available on request
  - Brakes available in IP68 design
  - Water depths of 5m (deeper on request)
- **Corrosion category Im2** based on DIN ISO 12944-5

Customised geared motor solutions for all applications

- Special applications
- Special adaptations
- Special environments
- Series production

Based on our modular, geared motor programme, we offer specific solutions for applications in all key markets such as, for example, food & beverage, energy, wastewater, concrete, metals and material handling in applications such as washdown conveyor systems, rolling mills, monorail systems and overhead conveyors, sludge thickeners, cranes, fans and blowers and turbines. Our aim is to provide our customers with products tailored to their needs. At the same time, we take care to ensure that a geared motor solution will prove to be especially profitable throughout its entire life cycle.

We already equip our geared motors with highly efficient permanent magnet motors to achieve low life cycle costs because low energy consumption will be particularly important in the future. We are very confident that we are once again pioneers in this sector

Learn more about Bauer Gear Motor, its products and philosophy at www.bauergears.com.



1

General

Advantages of Bauer-Geared Motors 17
Bauer Gearmotors 17
Bauer Gearboxes 17
Bauer Motors 17
Bauer Brakes 17

Bauer Gearmotors

- Low operating costs due to a high total efficiency
- 2-stage gearbox concept gives a longer lifetime due to a reduced number of moving parts
- Lower servicing costs due to a modular system
- No additonal protective measures (e.g. dusty environment) through the IP65 enclosure as standard
- The electrical design of the motor is aligned to the gearbox
- Quick reaction time in emergency situations (Breakdowns etc.) through Fast Assembly Delivery (within 24 hours)

Bauer Gearboxes

- Easy access to the fixation points reduces assembly times and installation costs
- Low servicing costs as the lubrication change results in normal duty with a lubrication temperature of approx. 80 °C first after 15 000 operating hours when using CLP 220 or 25 000 operating hours when using PGLP 220 / PGLP 460.
- 2-stage gearbox concept reduces the spare part stocking
- A variety of attachment possibilities (Foot, Flange, Solid and Hollow shafts, Torque arms)
- Sealed housing design reduces the risk of oil leakage and increases the oil lifetime
- The large housing volume allows usage in very harsh environments

Bauer Motors

- Low operating costs due to high motor efficiencies (IE1, IE2, IE3 and IE4 as Standard)
- All efficiency classes in the same motor frame size. No motor size change.
- Low installation costs through CAGE CLAMP® instead of the classical terminal block connection
- A variety of additional designs (connectors, brakes, backstops, rain covers, forced cooling, encoders etc.)
- Cost reduction of connection cabling and avoidance of additional protective elements (chokes, filters etc.), through built-on inverters (ETA-K2.0)
- Ideal for frequency inverter duty through insulation class F as standard

Bauer Brakes

- Low servicing costs through long lifetime of the brake discs (without adjustment)
- Brake-Motor correlation tailor made to the application by virtue of on average three brake sizes per motor size
- A variety of designs (lockable and non-lockable hand release, microswitch, heaters)
- Robust design for heavy duty applications
- Enclosure IP65 as Standard
- Very high wear resistance



2

Product Description

Selection of geared motors **21**
Installed positions of geared motors 21
Notes on safety 21
Guards for rotating parts 21
Touch protection 21
Operating noise 21
Painting and corrosion protection 21
Modular system overview **22**

Installed positions of geared motors

Bauer geared motors can be supplied for any type of fitting position. Vertical installation positions (motor-down) place a particularly severe strain on the shaft seal. It is advisable to avoid this arrangement especially at high motor speeds (e.g. above 1800 r/min) and continuous operation.

Notes on safety

See the notes on safety regarding installation in Operationg Indstructions.

Guards for rotating parts

The shrink disk (SSV) guards required under the German law relating to technical materials (Law Concerning Industrial Equipment - Equipment safety law GPSG) or by the Accident Prevention Regulations (UVV) are not included in the standard scope of supply because they are fitted by the customer in most cases, or the risk of accident can be eliminated by suitable installation.

See the Operating Instruction.

Touch protection

The fan hoods, via the externally mounted fan wheels, of the entire B2000 motor series fulfil the protection against contact with the standard finger (Ø12 mm).

Operating noise

The typical operating noise levels of BAUER geared motors are within the limits stipulated by VDI directive 2159 for gears and EN 60034-9, Table 2 for motors.

For physical reasons, low-ratio, high-speed gears produce more noise than medium- and high-ratio gears operating at low speeds.

Painting and corrosion protection

BAUER geared motors are spray-painted in RAL 7031 to DIN 1843 as standard. Other RAL colours are available at extra cost.

The output shafts are shipped in protective sleeves or with a protective coating to prevent corrosion.
The prerequisite for achieving a long protection period is the right choice of coating. The coating system from Bauer Gear Motor GmbH, offers suitable and long-lasting corrosion protection for all areas of application.

Category	Loads	Examples of indoor areas	Examples of outdoor areas	Possible IP-Protection class
Standard	Insignificant	Insulated and heated buildings with neutral atmosphere	—	IP54 IP65
C1	Insignificant	Insulated and heated buildings with neutral atmosphere	—	IP54 IP65
C2*	Low	Uninsulated and unheated buildings where condensation can occur, e.g. warehouses, sports halls	Atmosphere with low corrosive load, mostly rural areas	IP54 IP65
C3	Moderate	Production rooms with high relative humidity and some air pollution, e.g. facilities for food production, laundries, breweries, dairies	Urban and industrial atmosphere, moderate pollution by sulphur dioxide. Moderate coastal area with low salt pollution	IP65 IP66
C4	Strong	chemical plants, swimming pools, objects above sea water	Industrial and coastal areas with moderate salt exposure	IP65 IP66
C5-I	Very strong (industry)	areas with almost constant condensation and heavy contamination	Industrial areas with high relative humidity and aggressive atmosphere	IP66
C5-M	Very strong (sea)	areas with almost constant condensation and heavy contamination	Coastal and offshore areas with high salt pollution, buildings with almost constant condensation and heavy air pollution	IP66
IM2	Sea or brackish water	IP68 Underwater Drives	Port areas, lock gates, moles, offshore installations	IP68
Aseptic (proprietary development of Bauer)	Very strong	For indoor and outdoor use with very high environmental pollution and in hygiene-sensitive areas, in each case with high-pressure cleaning with chemical cleaning agents		IP67/IP69K

* The IM2 coating, consisting of modified epoxy resin, is a functional coating. Condensation of air humidity during or immediately after application can lead to a matt surface. The gloss level can therefore vary from drive to drive. Epoxy resins are not UV-resistant and will chalk and yellow when exposed to the elements. However, this does not affect the durability of the coating.

Gear design

Motor terminal box design

2

BG

Helical gear

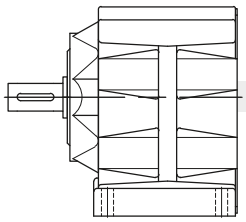

BF

Shaft-mounted gear

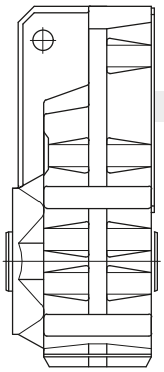

BK

Bevel gear

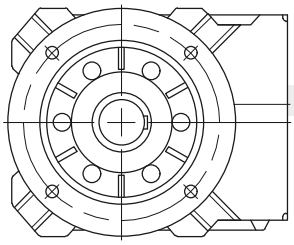

BS

Worm gear

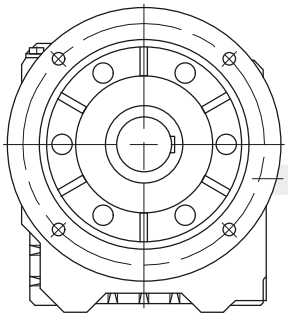

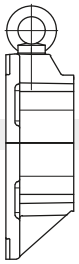

System cover

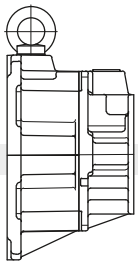

Pre-stage

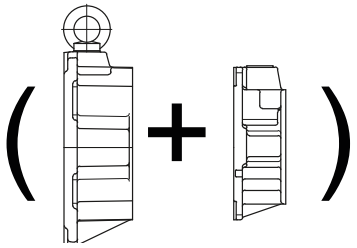

Pre-stage + System cover

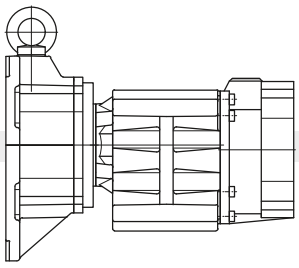

Intermediate gear

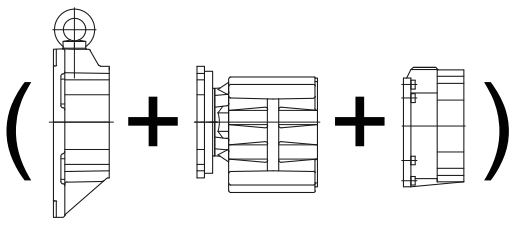

(System cover + Intermediate gear + System cover)

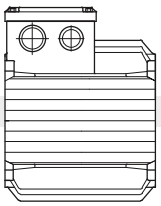

Motor with cast-on terminal box (KAG)

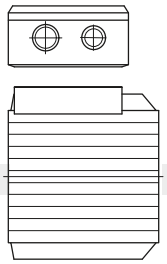

Motor with screwed-on terminal box (TB)

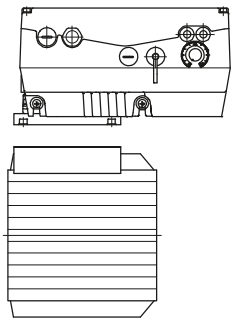

Motor with ETA-K-Converter

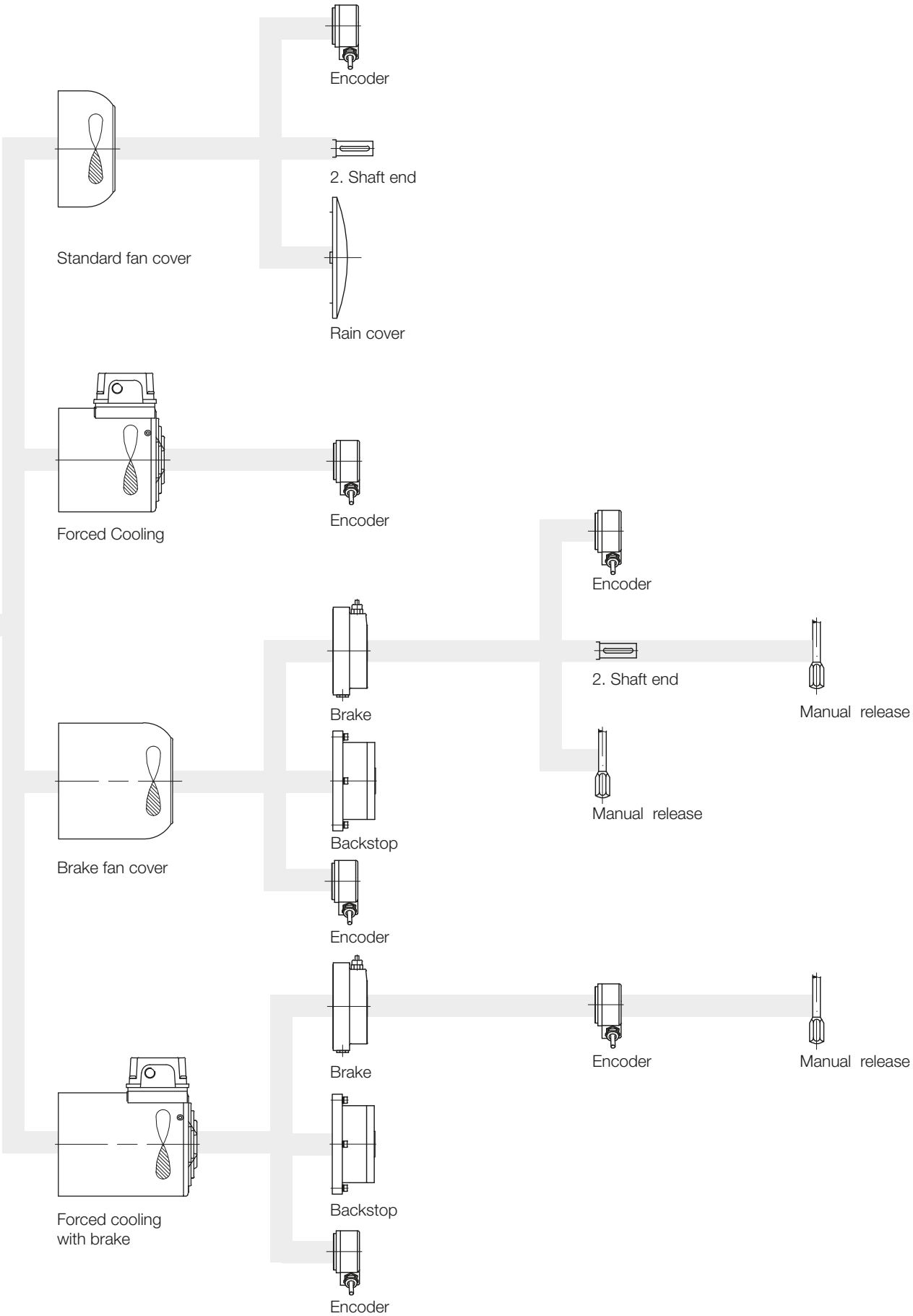
Covers B-Side
Extensions Standard Motor
Extensions Motor with Brake
Encoder
2. Shaft end
Rain cover
Standard fan cover
Forced Cooling
Encoder
Encoder
Brake
2. Shaft end
Manual release
Backstop
Manual release
Brake fan cover
Encoder
Brake
Encoder
Manual release
Backstop
Forced cooling with brake
Encoder



Type Designations

Significance of type designation **27**
BG-series helical-geared motor **28**
BF-series shaft-mounted geared motor **29**
BK-series bevel-geared motor **30**
BS-series worm-geared motor **31**
Versions and options **32**
BG and BF series 32
BK and BS series 32
General construction **33**
Three-phase motor 33
Motor protection 33
Brake rectifier in motor terminal box 33
Plug connector 33
Heavy-duty fan 33
Protective cover 33
CleanDrive 33
Supplement types **34**
Brake 34
Reverse rotation block 34
Digital and analogue encoder 34
Second shaft end 34
Forced ventilation 34
Overall design 34

Bauer bevel-geared motor with brake and standard add-ons

Example: Bauer bevel-geared motor with brake and standard add-ons

Significance of type designation

The type designation of a BAUER geared motor is a code designating all the features in the drive configuration.

The build-up of the type designation is explained with the help of the following example of a bevel geared motor with brake and series options.

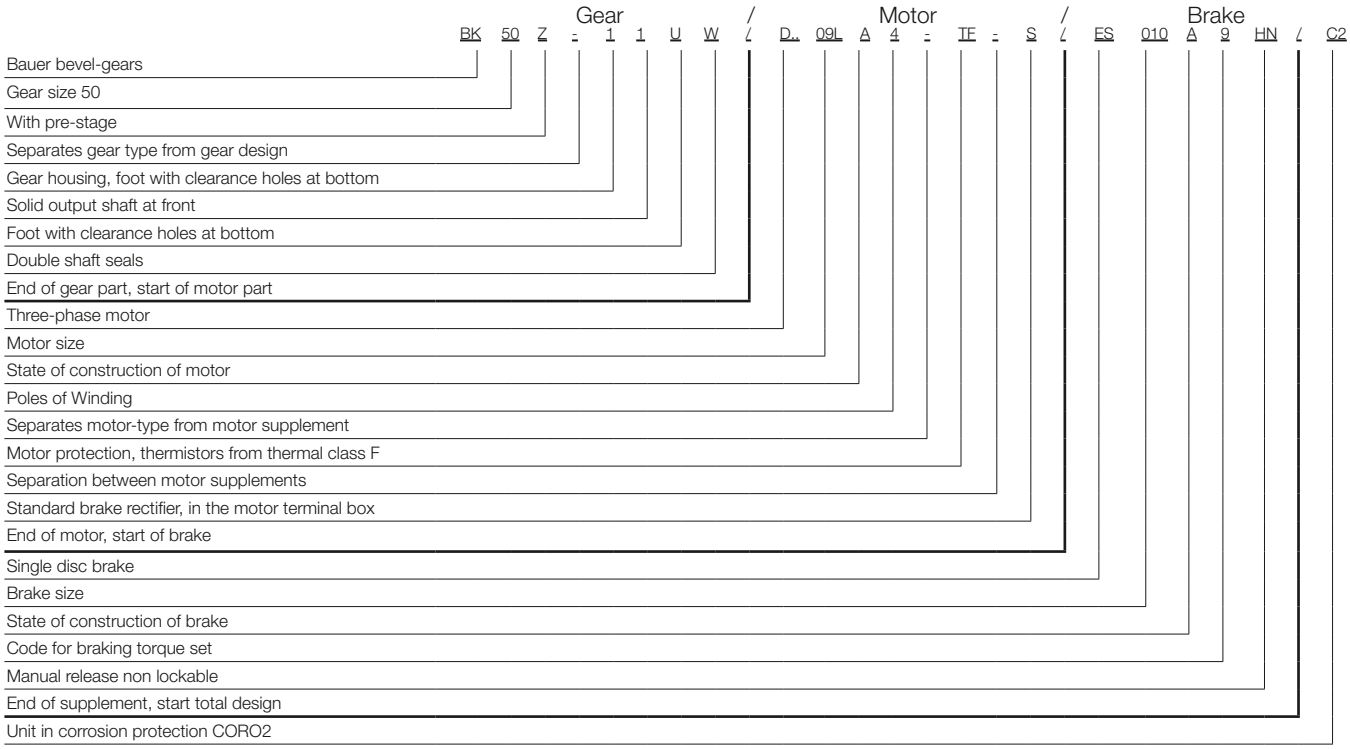

Type Designations

BG-series helical-geared motor

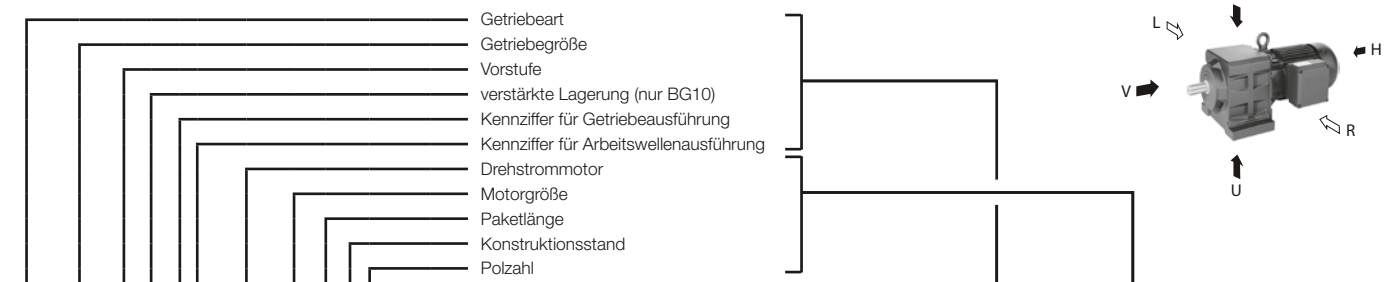

Z-. . — Getriebe mit Vorstufe
G- . . — Doppelgetriebe

1 . — Fuß mit Durchgangslöchern

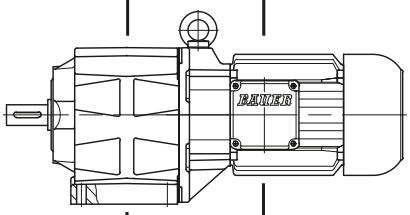

2 . — kleiner A-Flansch mit Durchgangslöchern
3 . — Standard A-Flansch mit Durchgangslöchern
4 . — großer A-Flansch mit Durchgangslöchern

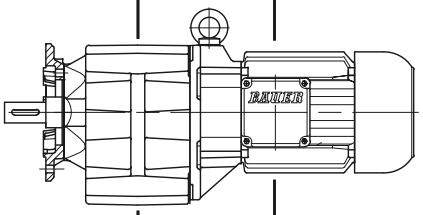

6 . L — Fuß mit Gewindelöchern links
6 . R — Fuß mit Gewindelöchern rechts
6 . LR — Fuß mit Gewindelöchern links und rechts

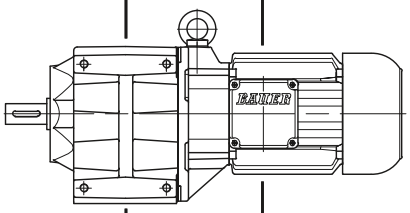

7 . — C-Flansch mit Gewindelöchern
8 . — allseitig bearbeitet

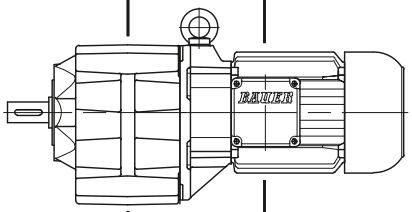

9 . L — Fußplatte links
9 . R — Fußplatte rechts
9 . LR — Fußplatte links und rechts

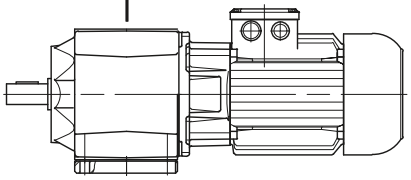

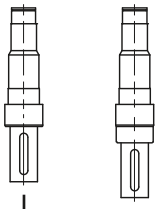

. 1 Zapfenwelle auf Getriebeseite V
. 7 Zapfenwelle auf Getriebeseite V für Flansch BG10

.. W Doppelte Wellendichtung

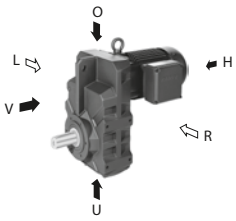

BF 70 Z X-74 / D..11 LA4

- Getriebeart
- Getriebegröße
- Vorstufe
- verstärkte Lagerung ≥BF60)
- Kennziffer für Getriebeausführung
- Kennziffer für Arbeitswellenausführung
- Drehstrommotor
- Motorgröße
- Paketlänge
- Konstruktionsstand
- Polzahl

Z-. . — Getriebe mit Vorstufe
X- . . — Getriebe mit verstärkter Lagerung
G-.. — Doppelgetriebe

0 . — Drehmomentstütze angegossen

2 . — kleiner A-Flansch mit Durchgangslöchern
3 . — Standard A-Flansch mit Durchgangslöchern
4 . — großer A-Flansch mit Durchgangslöchern

1 . LR — Fuß mit Durchgangslöchern links und rechts
6 . L — Fuß mit Gewindelöchern links
6 . R — Fuß mit Gewindelöchern rechts
6 . LR — Fuß mit Gewindelöchern links und rechts

7 . — C-Flansch mit Gewindelöchern
8 . — allseitig bearbeitet

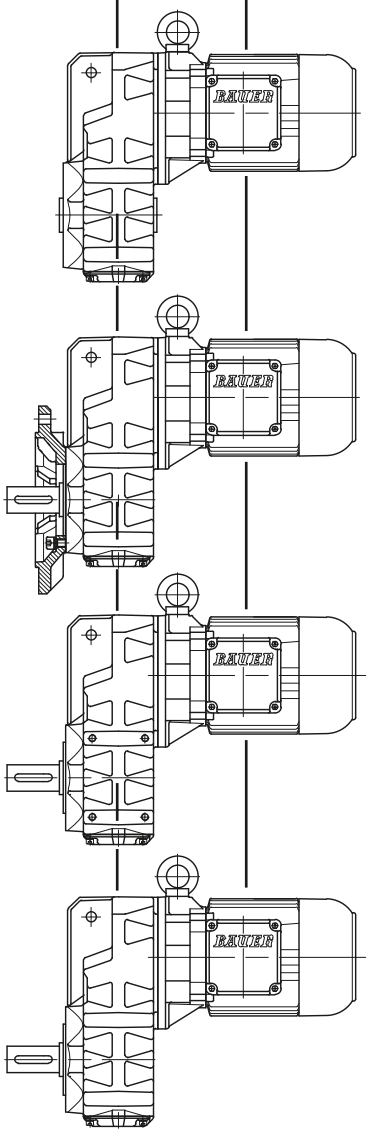

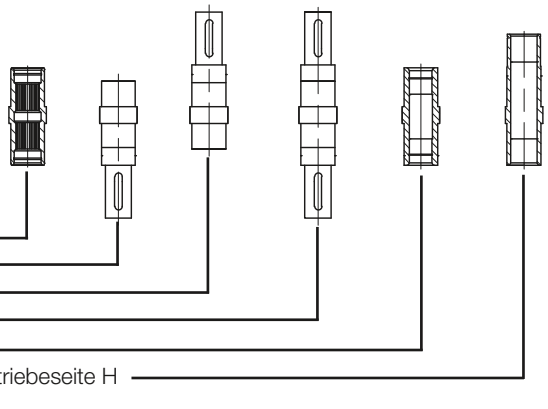

. 0 Vielkeilverzahnung nach DIN 5480
. 1 Zapfenwelle auf Getriebeseite V
. 2 Zapfenwelle auf Getriebeseite H
. 3 Zapfenwelle auf Getriebeseite V und H
. 4 Hohlwelle mit Passfedernut
. 5 Hohlwelle für Schrumpfscheibe SSV auf Getriebeseite H
.. W Doppelte Wellendichtung
.. A Abdeckung für Schrumpfscheibenverbindung SSV

Type Designations

BK-series bevel-geared motor

BK 20 Z X-64 / D06 LA 4

- Getriebeart
- Getriebegröße
- Vorstufe
- verstärkte Lagerung (nur BK20)
- Kennziffer für Getriebeausführung
- Kennziffer für Arbeitswellenausführung
- Drehstrommotor
- Motorgröße
- Paketlänge
- Konstruktionsstand
- Polzahl

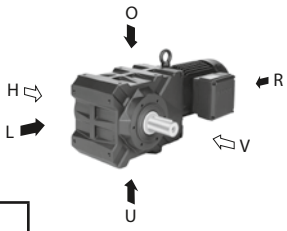

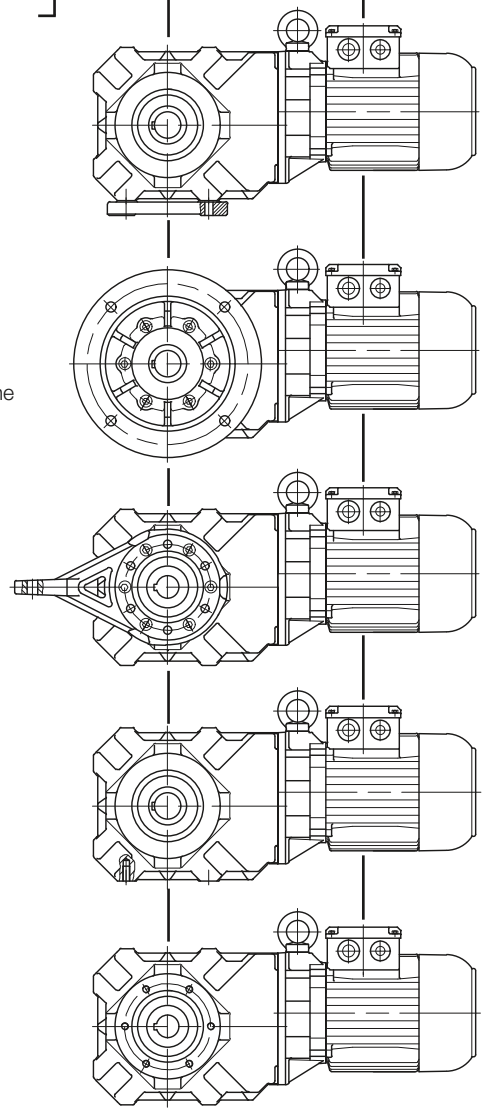

1 . U — Fuß mit Durchgangslöchern unten
1 . L — Fuß mit Durchgangslöchern links
1 . O — Fuß mit Durchgangslöchern oben

2 . V — kleiner A-Flansch mit Durchgangslöchern vorne
3 . V — Standard A-Flansch mit Durchgangslöchern vorne
4 . V — großer A-Flansch mit Durchgangslöchern vorne
. . H — A-Flansch hinten
. . VH — A-Flansch vorne und hinten

5 . V — Drehmomentstütze vorne
5 . VL — Drehmomentstütze vorne nach links
5 . VO — Drehmomentstütze vorne nach oben
5 . VU — Drehmomentstütze vorne nach unten
5 . HL — Drehmomentstütze hinten nach links
5 . HO — Drehmomentstütze hinten nach oben
5 . HU — Drehmomentstütze hinten nach unten

6 . U — Fuß mit Gewindelöchern unten
6 . L — Fuß mit Gewindelöchern links
6 . O — Fuß mit Gewindelöchern oben

7 . V — C-Flansch mit Gewindelöchern vorne
7 . H — C-Flansch mit Gewindelöchern hinten
7 . VH — C-Flansch mit Gewindelöchern vorne und hinten
8 . — allseitig bearbeitet

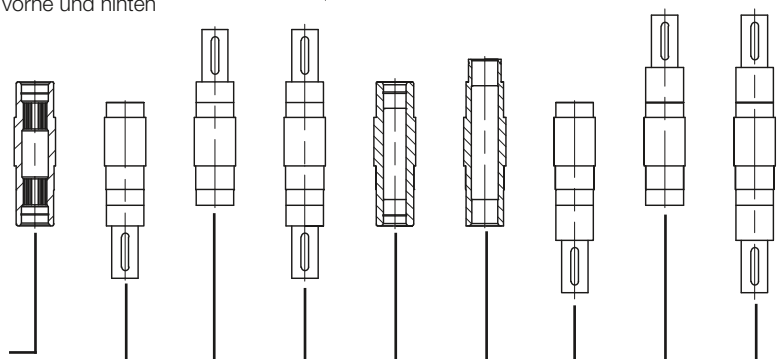

. 0 Vielkeilverzahnung nach DIN 5480
. 1 Zapfenwelle auf Getriebeseite V
. 2 Zapfenwelle auf Getriebeseite H
. 3 Zapfenwelle auf Getriebeseite V und H
. 4 Hohlwelle mit Paßfedernut
. 5 Hohlwelle für Schrumpfscheibe SSV auf Getriebeseite H
. 7 Zapfenwelle auf Getriebeseite V für Flansch (nur BK06)
. 8 Zapfenwelle auf Getriebeseite H für Flansch (nur BK06)
. 9 Zapfenwelle auf Getriebeseite V und H für Flansch (nur BK06)
. . W Doppelte Wellendichtung
. . A Abdeckung für Schrumpfscheibenverbindung SSV

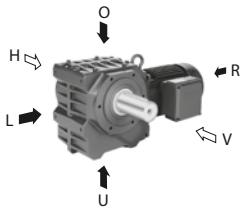

BS 20 Z X-64 / D..06 LA 4

- Getriebeart
- Getriebegröße
- Vorstufe
- Kennziffer für Getriebeausführung
- Kennziffer für Arbeitswellenausführung
- Drehstrommotor
- Motorgröße
- Paketlänge
- Konstruktionsstand
- Polzahl

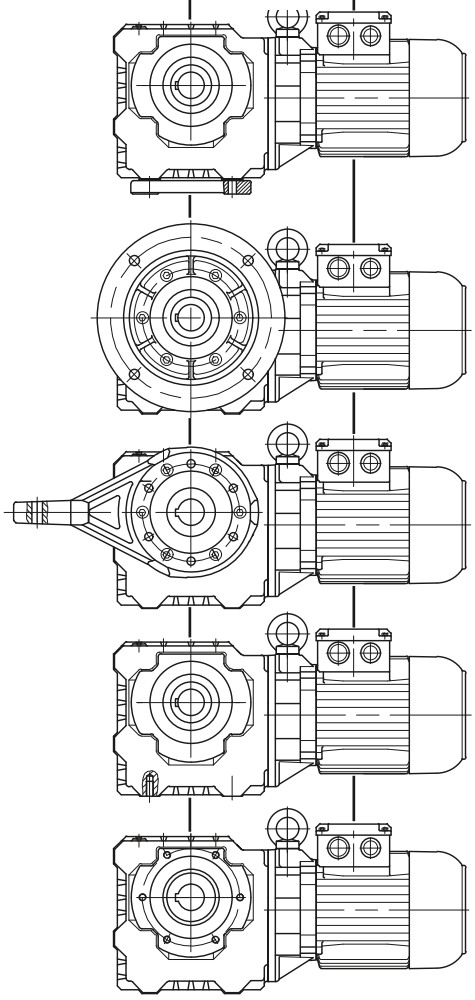

1 . U — Fuß mit Durchgangslöchern unten
1 . L — Fuß mit Durchgangslöchern links
1 . O — Fuß mit Durchgangslöchern oben

2 . V — kleiner A-Flansch mit Durchgangslöchern vorne
3 . V — Standard A-Flansch mit Durchgangslöchern vorne
4 . V — großer A-Flansch mit Durchgangslöchern vorne
. . H — A-Flansch hinten
. . VH — A-Flansch vorne und hinten

5 . V — Drehmomentstütze vorne
5 . VL — Drehmomentstütze vorne nach links
5 . VO — Drehmomentstütze vorne nach oben
5 . VU — Drehmomentstütze vorne nach unten
5 . HL — Drehmomentstütze hinten nach links
5 . HO — Drehmomentstütze hinten nach oben
5 . HU — Drehmomentstütze hinten nach unten

6 . U — Fuß mit Gewindelöchern unten
6 . L — Fuß mit Gewindelöchern links
6 . O — Fuß mit Gewindelöchern oben

7 . V — C-Flansch mit Gewindelöchern vorne
7 . H — C-Flansch mit Gewindelöchern hinten
7 . VH — C-Flansch mit Gewindelöchern vorne und hinten
8 . — allseitig bearbeitet

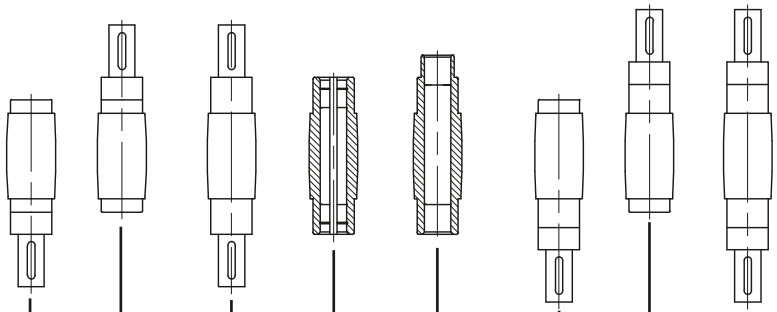

. 1 Zapfenwelle auf Getriebeseite V
. 2 Zapfenwelle auf Getriebeseite H
. 3 Zapfenwelle auf Getriebeseite V und H
. 4 Hohlwelle mit Paßfedernut
. 5 Hohlwelle für Schrumpfscheibe SSV
. 7 Zapfenwelle auf Getriebeseite V für Flansch (nur BS02 und BS03)
. 8 Zapfenwelle auf Getriebeseite H für Flansch (nur BS02 und BS03)
. 9 Zapfenwelle auf Getriebeseite V und H für Flansch (nur BS02 und BS03)
. . W Doppelte Wellendichtung
. . A Abdeckung für Schrumpfscheibenverbindung SSV

Type Designations

Versions and options

BG and BF series

BG series: type H4

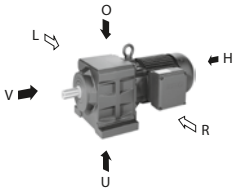

BF series: type H4

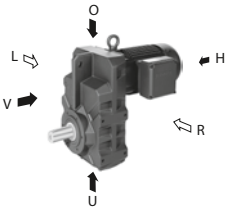

V = Front
The side of the gear unit facing away from the motor or the source of motive power

H = Rear
The side of the gear unit facing toward the motor or the source of motive power

L = Left
The left side of the gear unit as viewed from the output shaft side of type B3 for the BG series or type H4 for the BF series

R = Right
The right side of the gear unit as viewed from the output shaft side of type B3 for the BG series or type H4 for the BF series

BK and BS series

BK series: type H1

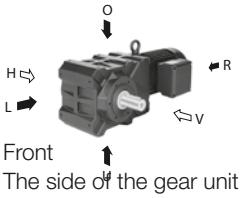

BS series: type H1

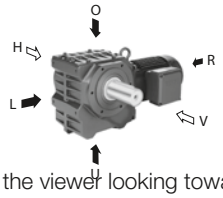

V = Front
The side of the gear unit facing toward the viewer looking toward the type H1 unit

H = Rear
The side of the gear unit facing away from the viewer looking toward the type H1 unit

L = Left
The left side of the gear unit as viewed from the output shaft side of type H1, or the torque brace oriented to the left

O = Top
The top side of the gear unit as viewed from the output shaft side of type H1, or the torque brace oriented upwards

U = Bottom
The bottom side of the gear unit as viewed from the output shaft side of type H1, or the torque brace oriented downwards

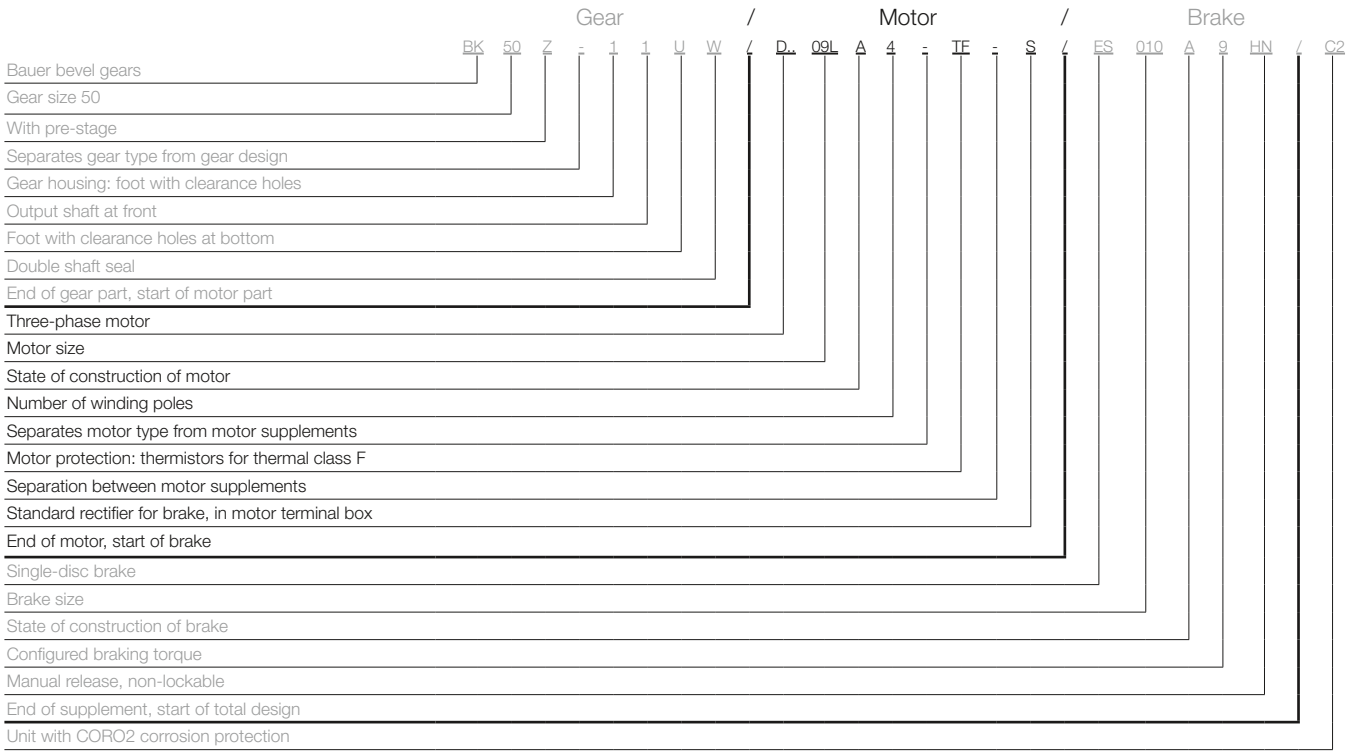

Three-phase motor	D		= Three-phase motor
	E		= Single-phase motor (Steinmetz circuit)
	S		= PM-Synchronous motor
	.	A	= Aseptic motor (germ-free drive)
	.	SE	= Three-phase motor with enhanced efficiency compliant with IE1
	.	HE	= Three-phase motor with enhanced efficiency compliant with IE2
	.	PE	= Three-phase motor with enhanced efficiency compliant with IE3
	.	N	= Motor without gear unit; foot-mount version
	.	NF	= Motor without gear unit; flange-mount version
	.	R	= Roller table motor
	.	XE	= Explosion-proof motor with increased safety
	.	XD	= Explosion-proof motors
	.	W	= Torque motor
	.	L	= Special rotor for traction and slewing gear motors
	.	C	= With main and auxiliary windings; only with single-phase motors (EC....)
	.	V	= Multiple voltage ranges (wide voltage range)
	.	U	= Unventilated (no forced ventilation)
Motor protection	TB		= Thermistor 140°
	TF		= Thermistor 160°
	TH		= Thermistor 180°
	TEB		= Thermistor warning/shutdown 120°/140°
	TBF		= Thermistor warning/shutdown 140°/160°
	TFH		= Thermistor warning/shutdown 160°/180°
	TOB		= Thermostatic switch, NC 140°
	TOF		= Thermostatic switch, NC 160°
	TOH		= Thermostatic switch, NC 180°
	TSB		= Thermostatic switch, NO 125°
	TSF		= Thermostatic switch, NO 160°
	TSH		= Thermostatic switch, NO 180°
	TX		= Other
Brake rectifier in motor terminal box	S		= Standard rectifier SG
	E		= Special rectifier ESG
	M		= Special rectifier MSG
Plug connector	ST		= Harting (other)
Heavy-duty fan	SL		
Protective cover	D		
CleanDrive	CD		= Aseptic drive with cable

Type Designations

Supplement types

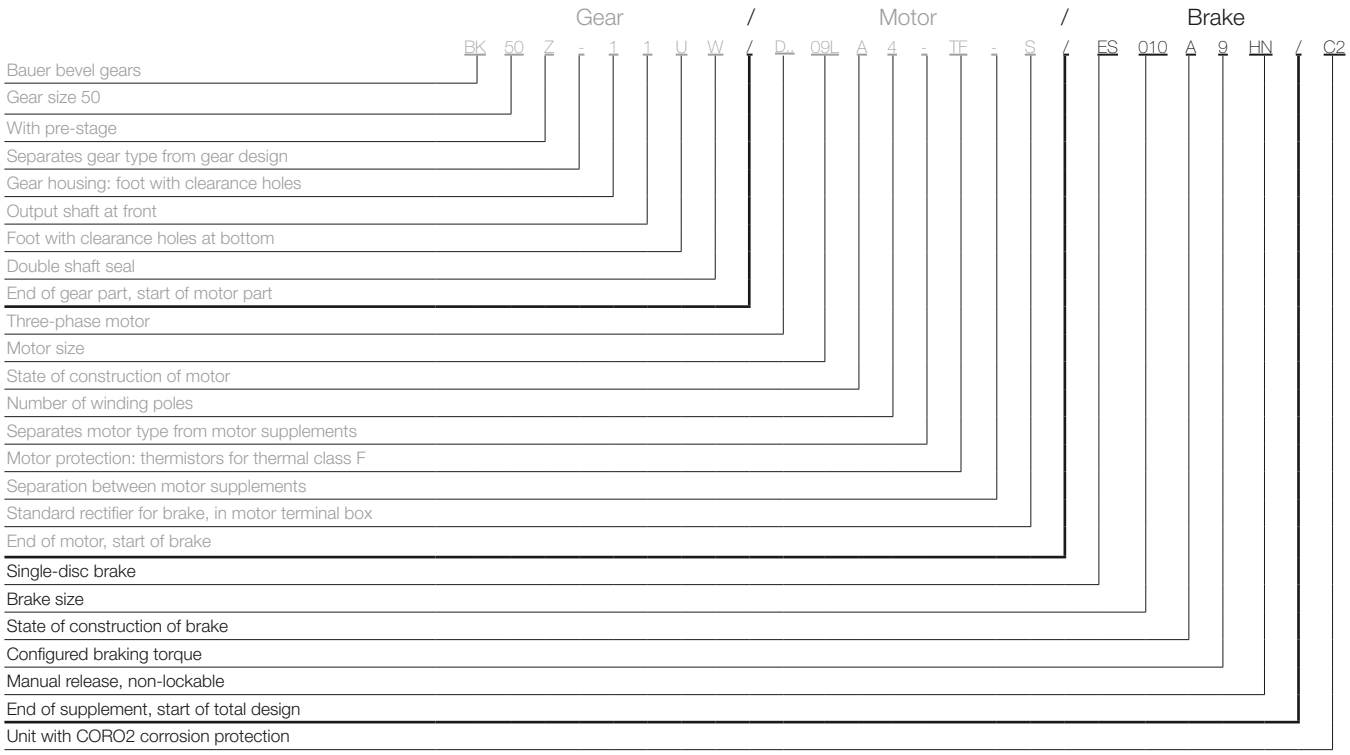

3

Brake

E		= Single-disc brake
ES		= Single-disc holding brake
EH		= Single-disc holding brake in heavy duty
ZS		= Two-disc holding brake
ESX		= Single-disc service brake
EHX		= Single-disc service brake in heavy duty version
ZSX		= Two-disc service brake
… 010		= Brake size
… …	A	= Construction state
… …	. 9	= Code for configured braking torque
… …	. . HN	= Manual release (not lockable)
… …	. . HA	= Manual release (lockable)

Reverse rotation block

RR	= Blocking direction clockwise
RL	= Blocking direction anticlockwise

Digital and analogue encoder

G

Second shaft end

ZW	= With key
ZV	= With square shaft

Forced ventilation

FV

Overall design

AV	= USA/Canada version with shaft dimensions in inches
AM	= USA/Canada version with metric shaft dimensions
UL	= US version
CS	= Canadian version
C1	= Coro1 corrosion protection
C2	= Coro2 corrosion protection
C3	= Coro3 corrosion protection
C4	= Coro4 corrosion protection
C5I	= Coro5 corrosion protection
C5M	= Coro5 corrosion protection
IM2	= Protection against sea or brackish water
SP	= Non-catalogue version



4

Gear Motor Selection

Selection of geared motors **37**
Drive configuration **38**
Drive configuration General 38
Required data for drive configuration 38
Determining the motor power 39
Determining the required torque 39
Determining the gear reduction ratio 39
Determining the factor of inertia 39
Drive configuration **40**
Determining the shock load 40
Determining the minimum service factor f_{Bmin} 40
Brake specification 40
Torque–speed characteristic 41
Motor configuration **42**
Dynamic power 42
Static power 42
Total power P_G 42
Motor selection 43
IE2 43
IE1 43
No-load cycle rate Z_0 44
Load factor K_L 44
Radial and axial forces on the output shaft **45**
Radial and axial forces on the output shaft 45
Maximum allowable radial force at force application point X 45
Bearing load limit 45
Shaft strength 46
Helical gear unit BG series 46
Shaft-mounted gear unit BF series 47
Bevel gear unit BK series 48
Worm gear unit BS series 48
Transmission components 49
Factor f_z for the type of transmission component 49
Axial force 49
Sizing based on efficiency **50**
Drive configuration based on efficiency 50
Savings potential Motor: η_{motor} 50
Calculation of the efficiency under partial load 50
Gear efficiency η_{gear} 51
System efficiency η_{system} 51
Shock loads of machinery **52**

BAUER GEAR MOTOR
A REGAL REXNORD BRAND

Bauer Gear Motor GmbH
Eberhard-Bauer-Str. 37 73734 Esslingen
+49 (0) 711 3518-0 www.bauergears.com

Information
Company: _____
Contact person: _____
Phone: _____
Email: _____

Questionnaire for geared motor selection

Gearbox type



☐ BG
Helical gears



☐ BF
Parallel shaft gears



☐ BK
Bevel gears



☐ BS
Worm gears



☐ Hiflex
☐ Standard
☐ Stainless

Number of items: _____
Country of operation: _____

Technical Data

Output shaft speed n2: _____ rpm
Torque M2: _____ Nm
Motor power: _____ kW
Efficiency class: _____
With pole-changing: _____

Voltage: _____ V
Connection: ☐ Y ☐ △
Temperature class: ☐ B ☐ F ☐ H
Frequency: ☐ 50 Hz ☐ 60 Hz
☐ Frequency inverter duty
Frequency range: _____ Hz

Operation

Service factor required: min _____ max _____
or Type of loads (conveyor, mixer, crusher, centrifuge, etc.): _____
Number of switching per hour: _____

Daily operating time:	☐ 8 hour	☐ 16 hour	☐ 24 hour
	☐ Light shock load	☐ Medium shock load	☐ Heavy shock load

Operation Duty: ☐ S1 ☐ S2 _____ min ☐ other S _____ Duty = _____ %

Output shaft design

☐ Solid shaft on side V/H/VH: _____
☐ Hollow shaft with keyway
☐ Special shaft dimensions (DxL), _____ x _____ mm
☐ Second shaft end on motor (DxL), ___ x ___ mm
☐ Solid shaft without parallel key
☐ Hollow Shaft for shrink disk
☐ Shrink disk
☐ Second shaft end on motor with parallel key (ZW)
☐ Second shaft end on motor with square shaft (ZV)
☐ Other (sketch attached)
☐ Splined Shaft acc. to DIN 5480

Mounting position

☐ Foot with clearance hole	☐ A-Flange	☐ rear	☐ bottom
☐ Foot with tapped holes	☐ C-Flange with tapped holes	☐ front	☐ top
☐ Torque arm with rubber buffers	☐ Foot plate	☐ left	☐ right

Mounting (acc. to page. 2 - H1, H2, V1, V2, etc.): _____
Terminal box position (acc. to page. 3): ☐ I ☐ II ☐ III ☐ IV
other: _____

Painting
☐ Standard RAL 7031
☐ other RAL _____

Environment

IP prot. type per EN 60034: ☐ IP54 ☐ IP65 ☐ IP66 ☐ IP67 ☐ IP68 ☐ IP69K
☐ Indoor installation ☐ Outdoor installation ☐ Corrosive environment: _____
Ambient temperature range: from _____ °C to + _____ °C Relative humidity: _____ %

Motor Accessories

☐ Brake voltage: _____ V
☐ Backstop: ☐ left ☐ right
☐ Thermistor motor protection
☐ Temperatursensor KTY
☐ Encoder type _____
☐ Rain cover
Required braking torque: _____ Nm
☐ Brake wear/function monitoring
☐ Thermostats motor protection
☐ Temperatursensor PT100
No. of pulse: _____
☐ Forced ventilation
☐ Manual brake release
☐ Brake heater
☐ Anticondensation heater (Motor)
Supply voltage ☐ HTL \ ☐ TTL

Additional requirements may be specified in a freely written form.

Drive configuration General

Motions are necessary in production plants and equipment for the manufacture of goods and products. Geared motors are used to implement these motions in stationary production equipment. The objective of drive configuration is to obtain the optimal motor for each type of motion.

Motions in machines and equipment vary considerably. Experienced design engineers reduce the necessary motions to a few standard types:

- continuous linear motion
- reciprocating linear motion
- horizontal linear motion
- vertical or oblique linear motion for lifting and lowering loads
- continuous rotary motion and reciprocating rotary motion

All motions can be divided into:

- an acceleration phase
- a constant-velocity phase
- a braking (deceleration) phase

These motion phases must be examined separately when sizing a drive, in order to determine the phase with the highest load. After the maximum load has been determined, the drive system can be selected.
See our separate “Design Guide” publication for assistance with various use cases.

Required data for drive configuration

In addition to the data on (Specification of geared motors), the following data is necessary for drive configuration:

Designation	Description	Unit
Z	Cycle rate	[1/h]
t_d	Operating time per day	[h]
t_a	Deceleration time	[s]
n_2	Output speed	[rpm]
n	Rated rotor shaft speed	[rpm]
J	Moment of inertia	[kgm²]
J_{ext}	External moment of inertia	[kgm²]
J_{ext}	External moment of inertia referred to the rotor shaft	[kgm²]
J_{rot}	Rotor moment of inertia	[kgm²]
F	Force	[N]
m	Mass	[kg]
v	Velocity	[m/s]
a	Acceleration	[m/s²]
g	Earth gravitational constant	[m/s²]
P_{dyn}	Dynamic power	[kW]
P_s	Static power	[kW]
P	Power	[kW]
M_2	Output torque	[Nm]
M_{2erf}	Required drive torque	[Nm]
M_N	Rated torque at rotor shaft	[Nm]
M_a	Deceleration torque	[Nm]
M_L	Braking or driving load torque	[Nm]
M_{gr}	Specific limiting torque of gearbox at gear ratio i	[Nm]
M_{Br}	Rated braking torque	[Nm]
i	Gear reduction ratio	
FI	Inertia ratio	

Drive configuration process

Motor configuration

Determining the motor power

The required power can generally be calculated as follows:

$$P = \frac{F \times v}{\eta}$$

As previously described, all motions are divided into an acceleration phase (dynamic power), a constant-velocity phase (static power), and a braking (deceleration) phase.

Depending on the type of motion, the force F necessary to overcome all opposing forces such as rolling friction, linear friction, gravitational force, acceleration and so on arising from the drive train has a strong influence on the required power and must be determined explicitly for each use case.

See Section 15 for assistance in selecting the right motor power.

Determining the required torque

After the motor power has been determined, the required gearbox output torque can be calculated with:

$$M_2 = \frac{P \times 9550}{n_2}$$

Determining the gear reduction ratio

The gear reduction ratio is the ratio of the rated speed of the motor (see the motor data in Section 15) to the desired output speed of the geared motor.

$$i = \frac{n}{n_2}$$

Gearbox size selection

Determining the factor of inertia

The inertia ratio is the ratio of the sum of the moments of inertia of all masses driven by the motor and converted to the motor speed, including the moment of inertia of the motor rotor, to the moment of inertia of the rotor:

$$FI = \frac{J_{ext'} + J_{rot}}{J_{rot}} \quad \text{where} \quad J_{ext'} = \frac{J_{ext}}{i^2}$$

Determining the shock load

The shock load (see Sections 6, 7, 8 and 9) is determined from the inertia factor, the type of transmission component and the relative moment of acceleration.

Determining the minimum service factor f_{Bmin}

Based on the operating time per day, the cycle rate and the ascertained shock load, the service factor f_{Bmin} can be taken from the tables in Sections 6, 7, 8 and 9.

Based on this minimum service factor f_{Bmin}, select a geared motor from the tables that has a higher service factor as well as the required output speed, output torque and motor power.

Note: The service factor relates solely to the required torque for static operation needed by the application, which should be covered by the output torque of the selected geared motor.
The dynamic portion is not taken into consideration here.

The actual service factor of the geared motor with regard to required torque for static operation can therefore be calculated as follows:

$$f_B = \frac{M_{gr}}{M_{2erf}}$$

The final step is to specify the accessory options for the geared motor.

Brake specification

Essentially it is necessary to determine, based on the amount of friction energy to be dissipated by the brake, whether the brake is a holding brake or a service brake.
See Section 16 for the definitions of holding brakes and service brakes.

Once all the necessary data and requirements are known, the required braking torque can be calculated as follows:

$$M_{br} = M_a \pm M_L$$

$$M_a = \frac{J \times n}{9{,}55 \times t_a}$$

If the specific application data is not known, for horizontally driven equipment we recommend selecting a braking torque that is 1.0 to 1.5 times the rated torque of the motor.

In the case of applications with significant external moments of inertia (FI greater than 2) and with operating cycles per hour, the brake size must always be selected on the basis of the thermally allowable braking energy. See Section 16 for detailed information on brake configuration.

In the case of lifting equipment, for safety reasons a braking torque twice as large as the rated torque of the motor should always be selected.

Torque–speed characteristic

The torque versus speed curve shows the operating characteristics of the asynchronous motor. The reference points shown schematically on the torque versus speed curve are significant criteria for motor selection.

Torque vs. Speed Curve

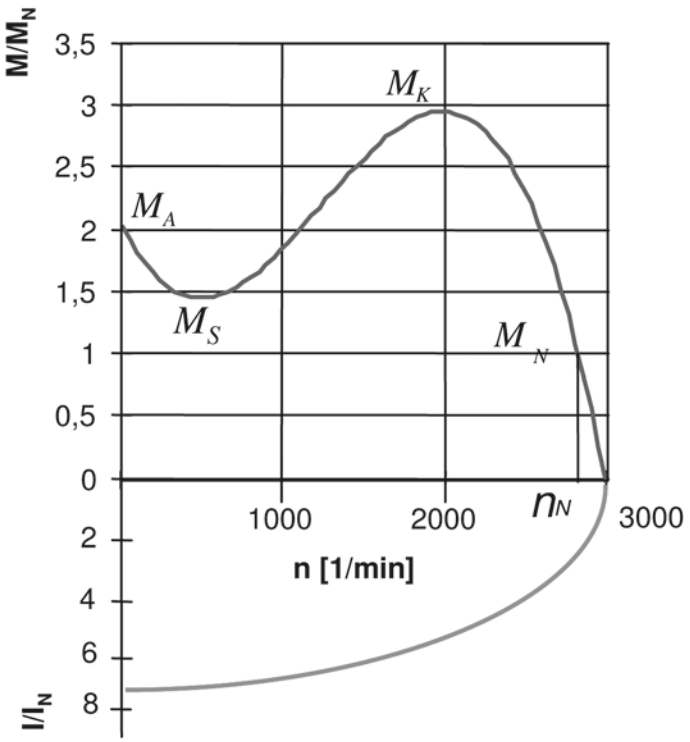

The **starting torque MA** with the rotor stationary, which is also called the locked-rotor torque, determines the acceleration of the equipment or system. If the motor is powered directly from the mains, bear in mind that the starting torque, usually listed in the motor data tables in the form of the ratio M_A/M_N, is a fixed and unalterable quantity. This means that the desired acceleration can only be approximated when the motor is operated directly from the mains. Operation from a frequency converter is discussed separately.

The **pull-up torque MS** is the least amount of torque developed by the motor while it is coming up to speed. It must always be greater than the effective load torque at the time when the pull-up torque occurs, as otherwise it will not be possible to accelerate the drive.

The **breakdown torque MK** is the maximum torque the motor is capable of producing. If the load increases above the rated torque M_n, the slip s increases, the speed n decreases, and the motor delivers more torque. This can rise to a maximum level M_K. After this point the motor stalls, which means that it suddenly stops running at this slip value (breakdown slip). If the breakdown torque is exceeded, either the load must be removed or the motor must be switched off immediately. Otherwise the motor will be destroyed as a result of overheating.

The **rated torque MN** is the torque available in continuous operation at the rated power P_N and rated speed n_N.

Dynamic power

The dynamic power is the power that accelerates the entire system, which consists of the load, transmission components, gearbox and motor.

$$P_{dyn} = \frac{m \times a \times v}{\eta}$$

P_{dyn}	Dynamic power [W]
m	Mass [kg]
a	Acceleration [m/s²]
v	Velocity [m/s]
η	Efficiency

Static power

The static power includes all forces present under zero-acceleration conditions. This includes rolling friction, linear friction, lifting force (with lifting) and wind force, among others.

$$P_S = \frac{F_F \times v}{\eta}$$

P_S	Static power [W]
F_F	Travel resistance [N]

Total power P_G

$$P_G = P_{dyn} + P_S$$

$$P_G = \frac{m \times a \times v}{\eta} + \frac{F_F \times v}{\eta}$$

Horizontal motion, rotary motion and vertical motion upwards	
Start-up time [s]	$t_A = \frac{\left(J_M + \frac{J_{ext}}{\eta}\right) \times n_M}{9{,}55 \times \left(M_A - \frac{M_L}{\eta}\right)}$
Cycle rate [c/h]	$Z = Z_0 \times \frac{1 - \left(\frac{M_L}{M_A \times \eta}\right)}{\left(\frac{J_S + \frac{J_{ext}}{\eta} + J_M}{J_M}\right)} \times K_L$
Vertical motion downwards	
Start-up time [s]	$t_A = \frac{\left(J_M + \frac{J_{ext}}{\eta}\right) \times n_M}{9{,}55 \times \left(M_A - (M_L \times \eta)\right)}$
Cycle rate [c/h]	$Z = Z_0 \times \frac{1 - \left(\frac{M_L \times \eta}{M_A}\right)}{\left(\frac{J_S + J_M + (J_{ext} \times \eta)}{J_M}\right)} \times K_L$

Motor selection

Example:

Required dynamic torque at motor (for acceleration):	126 Nm
Required static torque at motor	70.0 Nm
Total torque at motor:	196 Nm

IE2

P_N [kW]	Type	n_N [rpm]	M_N [Nm]	I_N 400 V [A]	cos φ	η (100% load) [%]	η (75% load) [%]	η (50% load) [%]	I_A/I_N	M_A/M_N	M_S/M_N	M_K/M_N	J_{rot} [kgm²]
7.5	DHE13LA4	1460	49	15.1	0.81	88.9	89.2	87.9	7.0	3.3	3.0	3.5	0.0345
9.5	DHE16MB4	1470	62	19.7	0.78	89.4	89.4	86.5	6.8	2.9	2.5	3.2	0.057
11	DHE16LB4	1470	71	22.5	0.78	90.3	90.0	88.3	7.9	3.5	2.9	3.8	0.076
15	DHE16XB4	1470	97	31	0.77	90.6	90.8	88.8	7.2	3.2	2.8	3.5	0.087
18.5	DHE18LB4	1470	120	35	0.83	91.5	91.7	90.0	7.9	3.6	3.0	3.3	0.160

IE1

P_N [kW]	Type	n_N [rpm]	M_N [Nm]	I_N 400 V [A]	cos φ	η (100% load) [%]	η (75% load) [%]	η (50% load) [%]	I_A/I_N	M_A/M_N	M_S/M_N	M_K/M_N	J_{rot} [kgm²]
7.5	DSE13MA4	1440	50	15.3	0.81	87.5	87.8	87.1	6.2	2.8	2.5	3.2	0.02900
9.5	DSE13LA4	1440	63	19.2	0.82	87.1	87.5	87.5	6.0	2.9	2.6	3.0	0.03450
11	DSE16MB4	1460	72	22.6	0.81	87.7	88.0	87.3	6.0	2.5	2.1	2.7	0.05700
15	DSE16LB4	1460	98	29.5	0.83	88.9	89.2	88.9	6.1	2.5	2.1	2.8	0.07600
18.5	DSE16XB4	1460	121	37.5	0.81	89.3	89.9	88.5	6.1	2.6	2.2	2.8	0.08700

Due to the significantly higher starting torque (M_A) of IE2 motors (M_A/M_N 3.5) compared to IE1 motors (M_A/M_N 2.5), an 11 kW with an IE2 (DHE16LB4) motor can be used in this case. Otherwise the 15 kW IE1 (DSE16LB) should be selected.

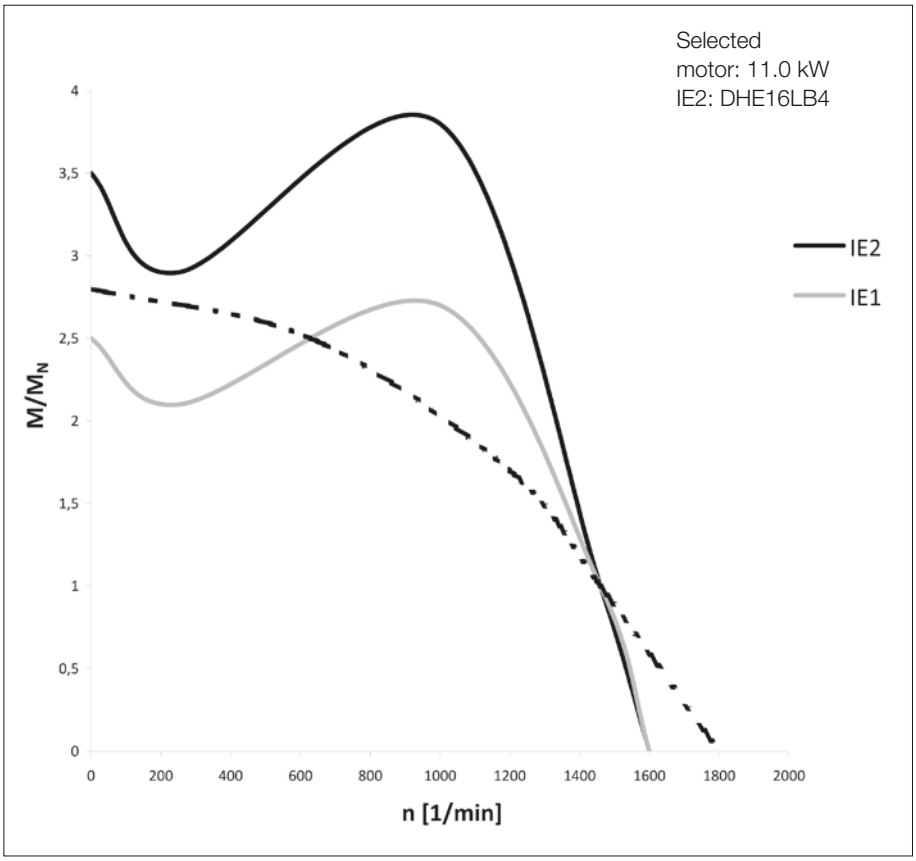

No-load cycle rate Z_0

If the cycle rate is greater than normal (typically around 60 cycles per hour), the additional thermal load and, depending on the type of power transmission, the additional mechanical load must be taken into account in motor selection.

The no-load cycle rate Z_0 is the number of start cycles per hour with the motor running under no load (no external moments of inertia) in which the allowable winding temperature for the insulating material class F is reached.

No-load cycle rate Z_0:

PN [kW]	Type	Z0 [c/h]
0.12	DPE05LA4	65000
0.12	DPE06LA4	65000
0.18	DPE07LA4	47000
0.25	DPE08MA4	36000
0.37	DPE08LA4	27000
0.55	DPE08XA4	19000
0.75	DPE09LA4	15000
1.1	DPE09XA4	11000
1.5	DPE09XA4C	8700
2.2	DPE11MA4	6400
3	DPE11LA4	5000
4	DPE11LA4C	4000
5.5	DPE13LA4	3100
7.5	DPE13XA4	2400
9.5	DPE16LB4	2000
11	DPE16LB4	1800
15	DPE16XB4	1400
18.5	DPE18LB4	1200
22	DPE18XB4	1000

As a result of external loads, the no-load cycle rate is reduced to the allowable service cycle rate. The effect of the load is expressed by the inertia ratio FI and the load factor K_L.

Load factor K_L

The load factor reflects the relative load *P*/*PN* and the duty cycle of the motor in operation between the cycles.
The relative load has a quadratic effect on the allowable cycle rate. The effect of the duty cycle depends on the circumstances. With little or no load, the stress on the motor decreases due to the relatively long cooling periods, while at rated load or heavy loading the stress on the motor increases due to load losses.

The load factor K_L for 4-pole motors is determined as follows:

$$K_{L100} = 1 - \left(\frac{P}{P_n} \right)^{1,5}$$

$$K_L = 0,35 + (K_{L100} - 0,25) \times ED$$

Radial and axial forces on the output shaft

For each geared motor with a solid shaft, the allowable radial force $F_{R\,(N,V)}$ referred to the centre of the output shaft, x = l/2, is listed in the selection tables. The listed data applies to both foot-mounted and flange-mounted versions. If the force application point F_X is off centre, the allowable radial force must be recalculated taking into account the bearing lifetime and the shaft strength.

Maximum allowable radial force at force application point X

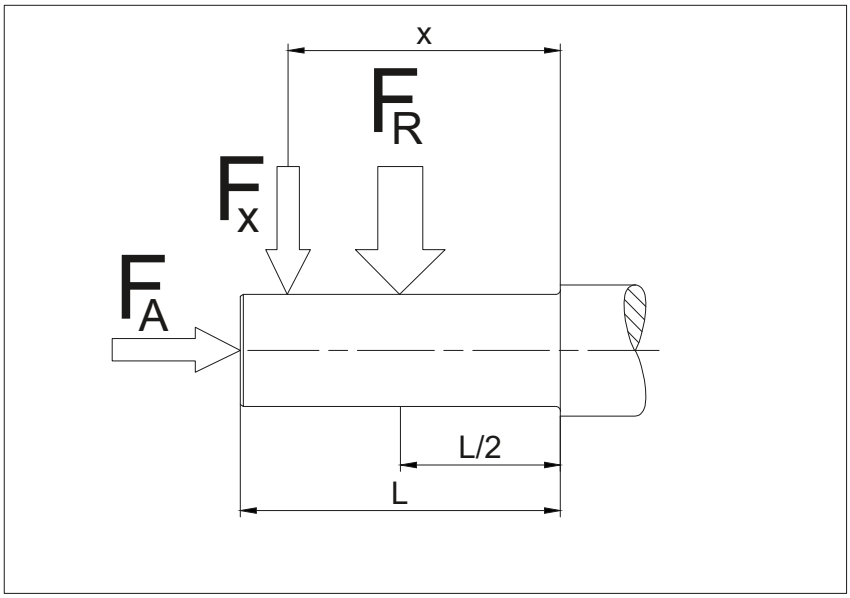

$F_{R(N,\,V)}$	Allowable radial force (x = l/2) according to the selection tables [N]
X	Distance from shaft junction to the force application point [mm]
F_A	Axial force [N]

To evaluate the radial force present at the force application point X, the allowable radial forces at position X must be determined with respect to the load limits of the bearings and the shaft strength.

If the calculated allowable radial forces at the force application point X are greater than the radial force that is present, the gearbox may be selected for the application.
If the calculated values are not sufficient or the force application point X is not within the stub shaft length l, please consult us.

Bearing load limit

$$F_{XL1} = F_q \times \frac{0{,}5 + b}{\left(\frac{X}{l} + b\right)}$$

$$F_{XL2} = F_q \times \frac{0{,}5 + a}{\left(\frac{X}{l} + a\right)}$$

Shaft strength

$$F_{XW1} = F_{qmax} \times \frac{0,5}{\left(\frac{X}{l}\right)}$$

$$F_{XW2} = F_{qmax} \times \frac{0,5 + c}{\left(\frac{X}{l} + c\right)}$$

For the selected gear ratio and bearing type (normal or reinforced), F_q is the allowable perpendicular force F_{RN} or F_{RV} from the geared motor selection tables.

F_{qmax} is the maximum allowable perpendicular force for the selected gearbox size as listed in the geared motor selection tables, independent of the bearing type (normal or reinforced).

The factors a, b and c for the individual gearbox types are listed in the following tables.

Helical gear unit BG series

Taille	Paliers	Arbre Code	l	a	b	c
BG04	normaux	-.1	24	0.5625	1.5000	-
BG05	normaux	-.1	28	0.5893	1.3929	-
BG06	normaux	-.1	30	0.6667	1.4167	-
BG10	normaux	-.1	40	0.7125	1.6750	-
		-.7		1.1000	2.0625	-
BG20	normaux	-.1	50	0.6100	2.2500	-
		-.7		0.9400	2.5800	-
BG30	normaux	-.1	60	0.5917	2.1750	-
		-.7		0.9417	2.5250	-
BG40	normaux	-.1	60	0.6917	2.3667	-
		-.7		1.0083	2.6833	-
BG50	normaux	-.1	80	0.5625	2.0000	-
		-.7		0.8563	2.2938	-
BG60	normaux	-.1	100	0.5300	2.0200	-
		-.7		0.7650	2.2550	-
BG70	normaux	-.1	120	0.4750	1.7292	-
		-.7		0.7292	1.9833	-
BG80	normaux	-.1	140	0.4286	1.7000	-
		-.7		0.6000	1.8714	-
BG90	normaux	-.1	200	0.3675	1.5300	-
		-.7		0.5825	1.7450	-
BG100	normaux	-.1	220	0.3477	1.4341	-
		-.7		0.5386	1.6250	-

Radial and axial forces on the output shaft

Shaft-mounted gear unit BF series

Frame size	Bearings	Output shaft code	l	a	b	c
BF06	normal	-.1	50	0.4500	1.4100	-
BF10	normal	-.1	60	0.5083	1.4833	-
		-.2		0.6500	1.6250	-
BF20	normal	-.1	70	0.4286	1.3571	-
		-.2		0.5571	1.4857	-
BF30	normal	-.1	80	0.3875	1.2563	-
		-.2		0.5688	1.4375	-
BF40	normal	-.1	100	0.4050	1.2250	-
		-.2		0.5250	1.3450	-
BF50	normal	-.1	120	0.3125	1.0625	-
		-.2		0.3959	1.1458	-
BF60	normal	-.1	140	0.3286	1.0821	-
		-.2		0.4036	1.1571	-
	reinforced	-.1		-	-	0.2750
		-.2		-	-	0.3643
BF70	normal	-.1	180	0.2722	1.0566	-
		-.2		0.3056	1.0889	-
	reinforced	-.1		-	-	0.2194
		-.2		-	-	0.2639
BF80	normal	-.1	220	0.2878	1.3536	-
		-.2		0.2873	1.3518	-
	reinforced	-.1		-	-	0.2364
		-.2		-	-	0.2268
BF90	normal	-.1	260	0.2500	1.4231	-
		-.2		0.2500	1.4231	-
	reinforced	-.1		-	-	0.2027
		-.2		-	-	0.1950

Gear Motor Selection

Radial and axial forces on the output shaft

Bevel gear unit BK series

Frame size	Bearings	Output shaft code	l	a	b	c
BK06	normal	-.1	50	0.4375	1.9875	-
		-.2		0.4375	1.9875	-
		-.7		0.9125	2.4625	-
		-.8		0.9125	2.4625	-
BK10	normal	-.1	60	0.5917	2.2417	-
		-.2		0.5917	2.2417	-
BK20	normal	-.1	70	0.5071	2.2357	-
		-.2		0.5071	2.2357	-
	reinforced	-.1		-	-	0.3929
		-.2		-	-	0.3929
BK30	normal	-.1	80	0.5250	2.2750	-
		-.2		0.5250	2.2750	-
	reinforced	-.1		-	-	0.4125
		-.2		-	-	0.4125
BK40	normal	-.1	100	0.4300	2.1700	-
		-.2		0.4300	2.1700	-
	reinforced	-.1		-	-	0.3400
		-.2		-	-	0.3400
BK50	normal	-.1	120	0.4083	1.9417	-
		-.2		0.4083	1.417	-
	reinforced	-.1		-	-	0.3250
		-.2		-	-	0.3250
BK60	normal	-.1	140	0.3536	1.8036	-
		-.2		0.3536	1.0836	-
	reinforced	-.1		-	-	0.3121
		-.2		-	-	0.2979
BK70	normal	-.1	180	0.2861	1.6694	-
		-.2		0.2861	1.6694	-
	reinforced	-.1		-	-	0.2428
		-.2		-	-	0.2317
BK80	normal	-.1	220	0.2818	1.5545	-
		-.2		0.2818	1.5545	-
	reinforced	-.1		-	-	0.2305
		-.2		-	-	0.2214
BK90	normal	-.1	260	0.2519	1.6096	-
		-.2		0.2519	1.6096	-
	reinforced	-.1		-	-	0.1989
		-.2		-	-	0.1912

Worm gear unit BS series

Frame size	Bearings	Output shaft code	l	a	b	c
BS02	normal	-.1	30	0.6000	2.1000	-
		-.2		-	-	-
		-.7		1.3333	2.8333	-
		-.8		-	-	-
BS03	normal	-.1	40	0.4375	1.9875	-
		-.2		-	-	-
		-.7		0.9125	2.4625	-
		-.8		-	-	-
BS04	normal	-.1	40	0.5375	1.7875	-
		-.2		-	-	-
BS06	normal	-.1	50	0.4800	1.9400	-
		-.2		-	-	-
BS10	normal	-.1	60	0.5917	2.3083	-
		-.2		-	-	-
BS20	normal	-.1	70	0.5500	2.4357	-
		-.2		-	-	-
BS30	normal	-.1	80	0.5312	2.4313	-
		-.2		-	-	-
BS40	normal	-.1	120	0.4292	1.7042	-
		-.2		-	-	-

Transmission components

If a transmission component is used (gearwheels, chainwheels, V-belt, etc.), the resulting radial forces can be determined as follows.

$$F_R = \frac{2000 \times M}{D_T} \times f_Z \leq F_{R(N,V)}$$

F_R Radial force [N]
M Torque [Nm]
D_T Pitch radius of the transmission component [mm]
f_Z Safety factor

A safety factor f_Z depending on the type of transmission component attached to the output shaft must be included when determining the value of the radial force F_R that is present.

Factor f_z for the type of transmission component

Transmission component	Safety factor f_z	Note
Gearwheel	1	= > 17 teeth
Gearwheel	1,15	< 17 teeth
Chainwheel	1	= > 17 teeth
Chainwheel	1,25	< 17 teeth
Toothed rack	1,15	< 17 teeth (pinion)
V-belt	2……2,5	From tensioning force
Flat belt	2….3	From tensioning force
Friction wheel	3….4	

Axial force

The following specification applies to the allowable axial force F_A on the output shaft (either tension or compression) for all Bauer geared motors and for foot, flange or hollow-shaft versions:

$$F_A = 0{,}5 \times F_{R(N,V)}$$

Please consult us in case of larger axial forces.

Gear Motor Selection

Sizing based on efficiency

Drive configuration based on efficiency

With the IEC 60034-30-1 standard and the ErP 2009/125/EC EU directive, utilisation of the potential energy savings in industrial environments has been given increased urgency and made legally mandatory.
In the industrial applications area, electric motors consume the vast majority of electrical energy (approximately 70 %). They are used in all areas and in many applications, such as fans, pumps, grinders, rolling mills, lifts, transport and conveying equipment, household appliances, and office machines.
Due to this broad range of applications, electrical drive systems are a primary target for energy saving policies. As electric motors consume a large amount of electrical energy, even small improvements in efficiency lead to significant savings.
In many cases, especially in transport and conveying equipment, it is necessary to reduce the speed of a three-phase squirrel-cage motor. This can be done by using external traction gearboxes or by using external or integrated reduction gearboxes. With regard to energy savings, the efficiency of the gear unit and transmission components must not be ignored.

The overall efficiency of a system is calculated as follows:

$$\eta_{Installation} = \eta_{Motor} \times \eta_{Reducer} \times \eta_{Machine}$$

Savings potential Motor: η_{motor}

In accordance with the Motor Regulation 16640/2009/EC, the legally binding EU ErP directive 2009/125/EC specifies IE3 (Premium Efficiency) as the minimum efficiency for new motors operating in continuous running duty (S1) ≥ 0,75 kW, effective 1. January 2017.

The right motor frame size and motor type should be selected based on environmental and economical aspects based on the new motor regulations for the IE3 series.

The new Regulation (EU) 2019/1781 extends the scope of the affected motors in the performance and product spectrum and sets new binding implementation dates of 1 July 2021 and 1 July 2023.

Calculation of the efficiency under partial load

The motor data sheets list motor efficiency figures according to Motor Regulation (EU) 2019/1781 for operation at several load levels (50 %, 75 % and 100 %).
The efficiency at any partial load point can be calculated approximately from the efficiency figures for 75 % and 100 % load, and the energy balance of the application can be evaluated accordingly.

$$R_{VL} = \frac{\left(\frac{100}{\eta_{100}} - 1\right) - 0{,}75 \times \left(\frac{100}{\eta_{75}} - 1\right)}{0{,}4375}$$

$$R_{VO} = \left(\frac{100}{\eta_{100}} - 1\right) - R_{VL}$$

$$\eta_p = \frac{100}{\left(1 + \frac{R_{VO}}{p}\right) + R_{VL} \times p}$$

with

η_{100}	Efficiency at 100 % load
η_{75}	Efficiency at 75 % load
RVL, RVO	Intermediate results
p	Partial load (value range: 0 to 1 or overload)
η_p	Efficiency at partial load point p

Gear efficiency η_{gear}

Comparison of the general savings potential of gearboxes and motors in continuous running duty (S1) shows that the energy savings potential of gearboxes is significantly higher than that of motors. The efficiency of gearboxes is predominantly dependent on the tooth geometry and the friction values of the bearings and seals. At high input speeds and with vertical designs in which the first stage rotates fully immersed in oil, splash losses cannot be neglected. Vertical designs should generally be avoided.

The efficiency of worm gear drives is highly speed dependent (see illustration). Bauer worm gear units are available as two-stage worm gear units for frame sizes BS04 and larger. This enables very high reduction ratios and significantly higher efficiency than with pure worm gear units. A loss of 2 % per stage can be assumed for two-stage worm gear units.

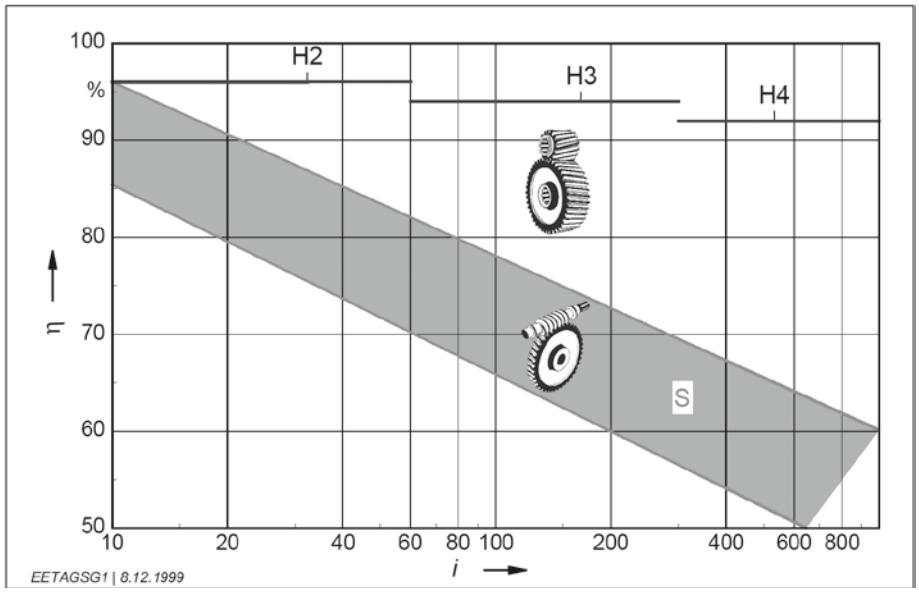

Comparison of typical efficiency (η) versus reduction ratio (i) for helical spur gear units (H) with two, three or four stages and two-stage worm gear units (S), relative to the rated power of the gear unit.

System efficiency η_{system}

The drive system provides the highest savings potential in the analysis of the overall efficiency. Designers and plant engineers should always strive to optimise the transmission components.

Transmission component	Conditions	Efficiency
Wire rope	Per full turn on the wire drum (with journal or roller bearings)	0.91–0.95
V-belt	Per full turn on the belt pulley (with normal belt tension)	0.88–0.93
Synthetic belts	For each full turn or roll, with roller bearings (normal belt tension)	0.81–0.85
Rubber belts	For each full turn or roll, with roller bearings (normal belt tension)	0.81–0.85
Toothed belts	For each full turn or roll, with roller bearings (normal belt tension)	0.90–0.96
Chains	For each full turn or chainwheel, with roller bearings (depending on chain size)	0.90–0.96
Spindles	Trapezoid-thread spindle Ballscrew spindle	0.30 – 0.70 0.70 – 0.95
Gear unit	With spur gears or bevel gears: 2 % per stage, with worm gears and other types of toothing, according to manufacturer's data	0.94–0.98

Shock loads of machinery

Shock loads for various types of machinery are listed in standards and guidelines as well as industry-specific documents and manufacturer's documents. If for example a crusher or a press is listed here with an shock load class of III, this is justified. On the other hand, under favourable conditions a belt conveyor could have an shock load class of I, but this could quickly change to III with on/off operation, high speed and overdrive due to a loose chain.
Consequently, the classifications in the following table should by no means be taken blindly. They provide a rough point of reference, but the ultimate classification of the shock load should always take into account the factors specified by Bauer, in particular the inertia ratio, the cycle rate and the transmission component(s).

Drive	Shock load		
Construction machinery			
Construction lifts		II	
Concrete mixers		II	
Road construction machinery		II	
Chemical industry			
Cooling drums		II	
Mixers		II	
Stirrers (light media)	I		
Stirrers (viscous media)		II	
Drying drums		II	
Centrifuges (light)	I		
Centrifuges (heavy)		II	
Transport and conveying systems			
Hauling winches		II	
Conveying machines			III
Apron conveyors		II	
Belt conveyors (bulk material)	I		
Belt conveyors (piece goods)		II	
Bucket belt conveyors		II	
Chain conveyors		II	
Circular conveyors		II	
Freight lifts		II	
Flour bucket conveyors	I		
Passenger lifts		II	
Flat belts		II	
Screw conveyors		II	
Gravel bucket conveyors		II	
Inclined lifts			III
Steel belt conveyors		II	
Chain conveyors		II	
Blowers and fans			
Roots blowers		II	
Blowers (axial and radial)	I		
Cooling tower fans		II	
Suction blowers		II	

Drive	Shock load		
Rubber			
Extruders			III
Calenders		II	
Kneaders			III
Mixers		II	
Rolling mills			III
Timber processing and woodworking			
Debarking drums			III
Planers		II	
Woodworking machinery	I		
Saw frames			III
Crane systems			
Luffing mechanisms	I		
Traversing mechanisms			III
Hoisting mechanisms	I		
Slewing mechanisms		II	
Jib mechanisms		II	
Plastics			
Extruders		II	
Calenders		II	
Mixers		II	
Grinders and pulverisers		II	
Metalworking			
Plate bending machines		II	
Plate straightening machines			III
Hammers			III
Planers			III
Presses			III
Shears		II	
Forging presses			III
Punches			III
Countershafts and driveshafts	I		
Machine tools (principal)		II	
Machine tools (ancillary)	I		

Drive	Shock load		
Food processing			
Filling machines	I		
Kneading machines		II	
Mashing machines		II	
Packaging machines	I		
Sugar cane cutters		II	
Sugar cane mills			III
Sugar beet cutters		II	
Sugar beet washers		II	
Paper			
Couching			III
Smoothing rolls			III
Hollander		II	
Pulp grinder			III
Calender		II	
Wet presses			III
Shredders			III
Suction presses			III
Suction rolls			III
Drying rolls			III
Stone and soil			
Crushers			III
Rotary kilns			III
Hammer mills			III
Tube mills			III
Beating mills			III
Tile and block presses			III
Fabrics			
Winders		II	
Printing and dying machines		II	
Tanning vats		II	
Shredders		II	
Looms		II	

Drive	Shock load		
Rolling mills			
Plate shears			III
Plate turners		II	
Billet presses			III
Billet and slab lines			III
Billet conveyors			III
Wire drawing machines		II	
Descaling machines			III
Sheet metal mills			III
Plate mills			III
Winders (strip and wire)		II	
Cold rolling mills			III
Chain transports		II	
Billet shears			III
Cooling beds		II	
Cross transports		II	
Roller tables (light)		II	
Roller tables (heavy)			III
Roll straighteners		II	
Tube welders			III
Trimming shears		II	
Cropping shears			III
Continuous casting machines			III
Roll adjustment devices		II	
Manipulators			III
Laundry			
Drum dryers		II	
Washing machines		II	
Water treatment			
Centrifugal aerators		II	
Archimedes screw		II	

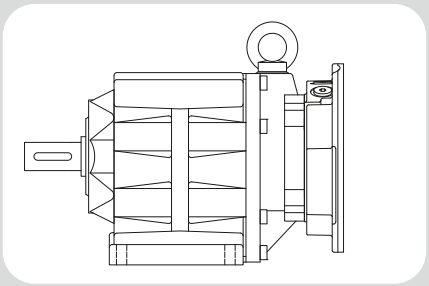

5

Gearboxes & Lubrication

Standard mounting positions **57**
Postion of the terminal box **59**
Position of the terminal box and the cable entry points (BG and BF) 59
Position of the terminal box and the cable entry points (BK and BS) 60
Gearboxes **61**
Radial and axial forces at the output shaft 61
Dimensions and fits of output shafts and keyways 61
Installing transmission elements 62
Gear with solid shaft 62
Gear with hollow shaft 62
Shrink disc coupling 62
Torque restraint 63
Notes for installing shaft mount gears with hollow shaft and keyway 63
Gear ventilation 63
Output shaft seals 63
Lubricants **64**
Lubricant quantities 65
Lubricant quantities, BG-series gears 66
Lubricant quantities, BG20-01R 67
Lubricant quantities, BF-series gears 68
Lubricant quantities, BK-series gears 69
Lubricant quantities, BS-series gears 70
Lubricant quantities, pre-stage gears (Z) 71
Lubrication quantity for intermediate gear 72
Threaded plugs **73**
Position of threaded plugs 73
-BG-series gears 73
-BG-20-01R 74
-BF-series gears 75
-BK-series gears 76
-BS-series gears 77
-pre-stage gears (Z) 78
-in the System Cover Design with Standard Geared Motor 79
-in the System Cover Design with foreign motor or gear design with input shaft 80
-in the System Cover Design with pre-stage Z 81

BG series

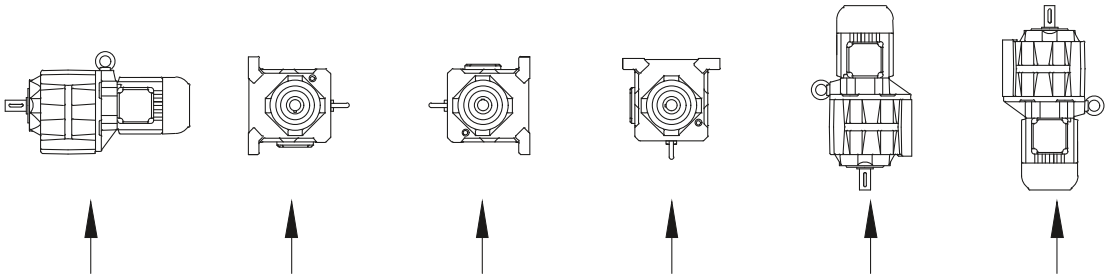

Gear side	(U)	(R)	(L)	(U)	(V)	(H)
Mounting position	H4	H1	H2	H3	V1	V2

BF series

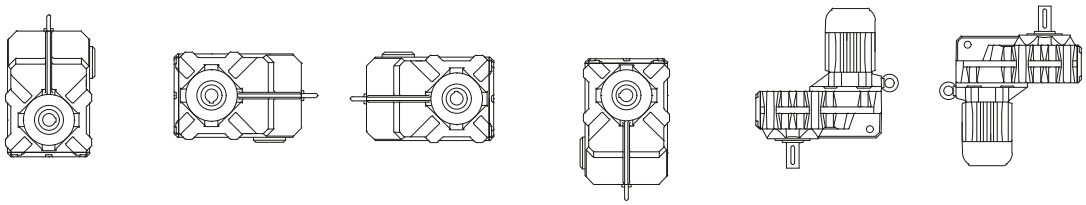

Gear side	(U)	(R)	(L)	(U)	(V)	(H)
Mounting position	H4	H1	H2	H3	V1	V2

Standard mounting positions

BK series

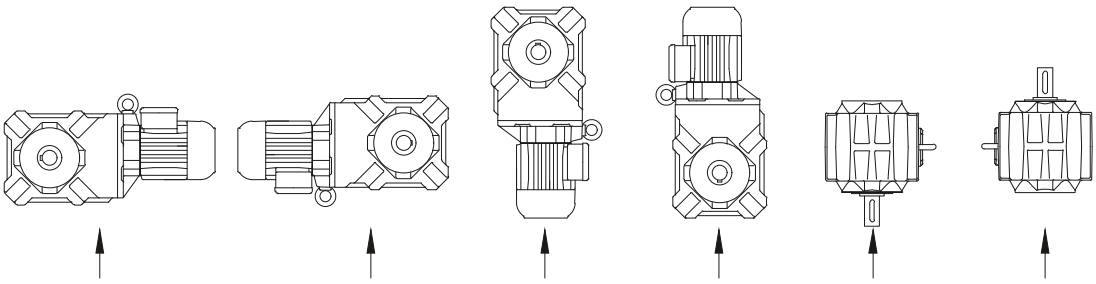

Gear side	(U)	(O)	(R)	(L)	(V)	(H)
Mounting position	H1	H2	H3	H4	V1	V2

BS series

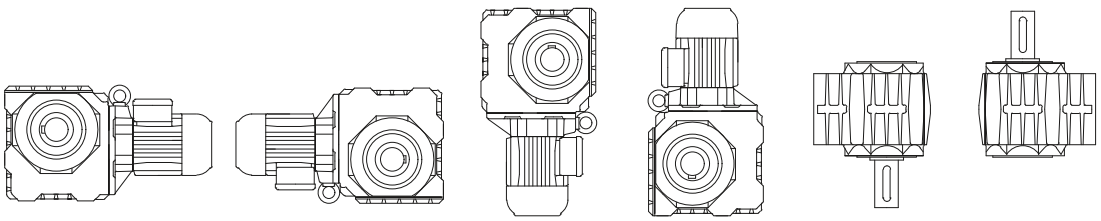

Gear side	(U)	(O)	(R)	(L)	(V)	(H)
Mounting position	H1	H2	H3	H4	V1	V2

Position of the terminal box and the cable entry points (BG and BF)

The standard position of the terminal box for helical-gear and shaft- mounted geared motors is position I. Cables may be introduced from side A or C.

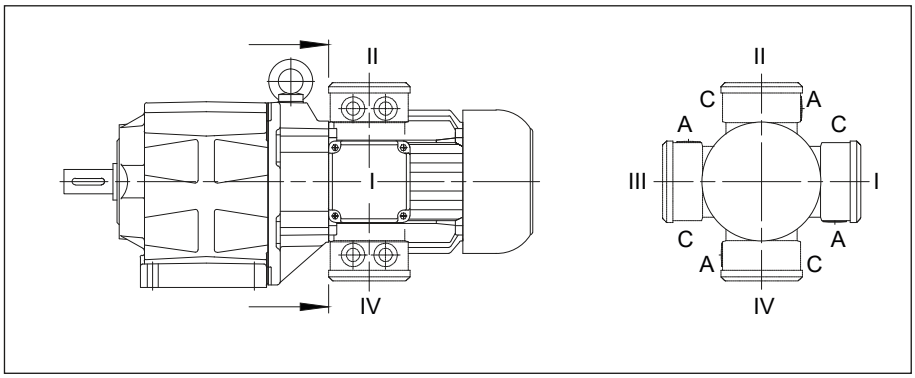

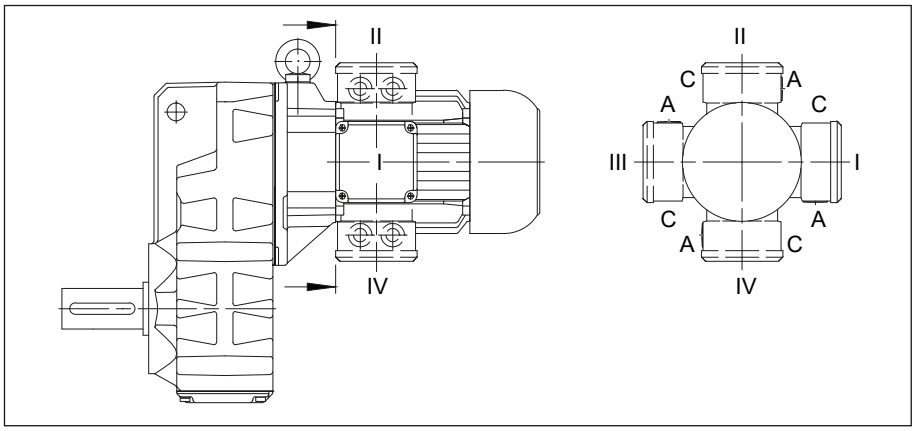

Turning or rotating the gearbox in space in the different mounting positions according to DIN 42950 does not influence the marking as shown. The details of the terminal box always show the position of the terminal box and the cable entry in relation to the gearbox and not in space. The mounting according to DIN 42950 is to be given separately.

Position of the terminal box

Position of the terminal box and the cable entry points (BK and BS)

The standard position of the terminal box for bevel-geared and worm- geared motors is position II.

Cable entry through side A or side C is possible

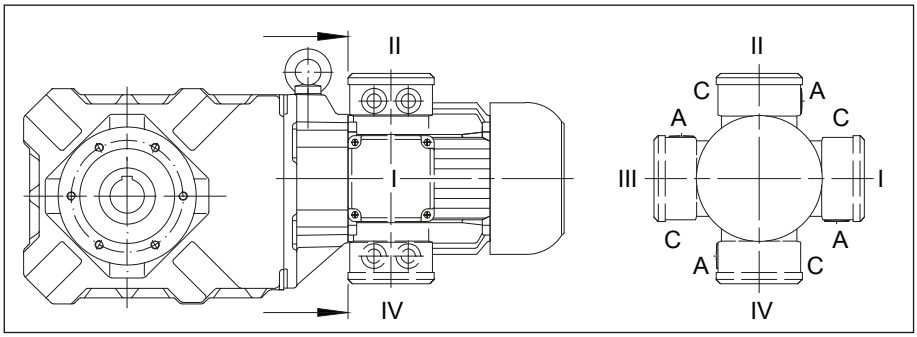

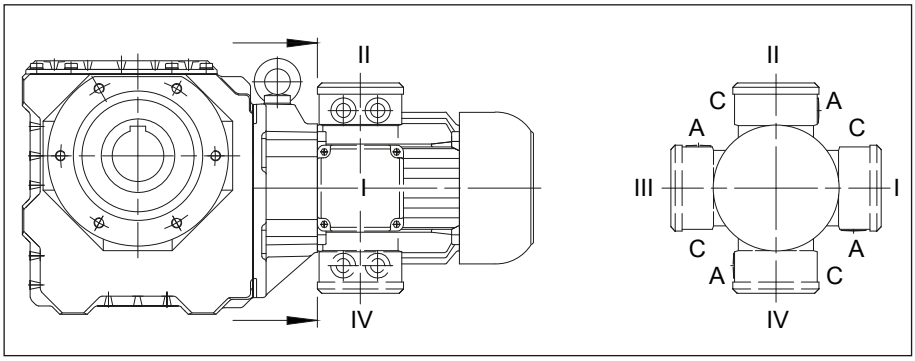

Turning or rotating the gearbox in space in the different mounting positions according to DIN 42950 does not influence the marking as shown. The details of the terminal box always show the position of the terminal box and the cable entry in relation to the gearbox and not in space. The mounting according to DIN 42950 is to be given separately.

Radial and axial forces at the output shaft

The output shafts and output-shaft bearings are matched to the motor torques. It is advisable to locate the drive-transmission element's point of application as close as possible to the shaft collar to ensure that the load imposed by external radial forces is not unnecessarily high. Permissible values for radial forces referred to the output shaft centreline are listed in the selection tables. Please consult us if your application involves extra-high axial loading.

Dimensions and fits of output shafts and keyways

Output shaft and second shaft stub, keyway and key are in compliance with the DIN standards and ISO fits listed below:

Solid shaft

Shaft diameter	to D = 50 mm in ISO k6 (DIN 748-1)
	as of D = 50 mm in ISO m6 (DIN 748-1)
Keyway	ISO P9 (DIN 6885-1)
Key, height	ISO h9 (DIN 6885-1 and DIN 6880)
Bore - customer	ISO H7

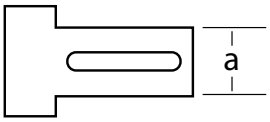

a/mm	Fit
0…50	ISO k6
> 50	ISO m6

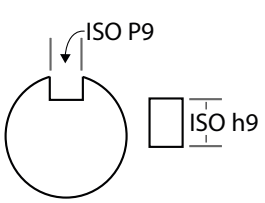

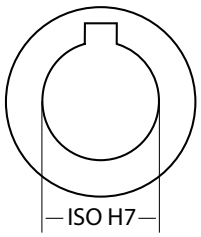

Hollow shaft with keyway

Bore diameter	ISO H7 (DIN 748)
Keyway	ISO JS9 (DIN 6885-1)
Key, height	ISO h9 (DIN 6885-1 and DIN 6880)
Customer shaft	ISO h6

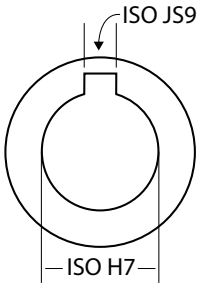



Hollow shaft for shrink-on disc coupling (SSV)

Outside diameter	ISO f7
Inside diameter	ISO H7
Customer shaft	ISO h6

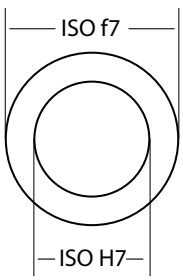

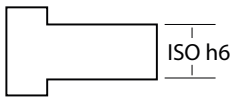

Installing transmission elements

Note:
Gearboxes using torque reaction by means of a flange (Code 2.; 3; 4.; 7.; 8.) or torque arm (Code 5.), must have the side for the torque reaction the same as where the radial force on the output shaft occurs (see rubber buffers for torque arms)! Please consult the factory for other designs.

Gear with solid shaft

Always exercise meticulous care when fitting transmission elements onto output shafts and, whenever possible, use the DIN 332 tapped bore provided for this purpose. Fitting is usually easier if the transmission element can be heated to approximately 100° C for installation. Dimension the locating bore to ISO H7.

Gears with solid shaft at each end (gear code -.3/): alignment of the two keys is subject to the DIN 7168 tolerances, the degree of accuracy is “fine”.

Gear with hollow shaft

Hollow shafts usually engage solid shafts of the driven machinery. The gear unit must be mounted such as to be free of constraint and be fixed axially (e.g. by means of assembly help acc. following description “notes for installing shaft mount gears with hollow shaft and keyway”). Special contract provision must be made if the hollow shaft has to guide the solid shaft or, for any other reason, close out-of-round tolerance referenced to a point on the gear housing (such as a flange, for instance) is required.

Shrink disc coupling

A shrink disc coupling (SSV) can transmit high torque from the non- grooved hub to the smooth shaft. The SSV is easily secured and released, using commercially available bolts. SSVs are the ideal supplement for shaft mount gears. The maximum transmittable torque for the selected shrink discs when fitted and mounted according to instructions is above the starting torque of the respective motors classified as standard (for classification of shrink disc sizes see chapter 11, 12, 13 “Additional dimensional drawings for Shrink disc coupling).

Torque restraint

Shaft-mounted geared motors require a suitable torque restraint to resist the reaction torque. Shaft-mounted gears have cast torque arms as standard. Bevel gears and worm gears are available with bolt-on torque arms on request. The torque arm is screwed onto the front “V” on the side of the gear unit. It is always important to ensure that the torque arm does not create excessive constraining forces due to the driven shaft running untrue, for example. Excessive play can result in excessive shock torques in switching or reversing operations. Consequently, we recommend the use of pre-tensioned rubber damping elements. These rubber buffers are part of the scope of supply for designs with a torque arm (see chaper 11, 12, 13 dimensional drawings “Rubber buffer for torque restraint”).

Notes for installing shaft mount gears with hollow shaft and keyway

(1) Attaching the hollow shaft to the customer shaft
Threaded bolt (d) is screwed into the end thread of the shaft to be driven. By tightening the nut, apply force to thrust plate (b) and locating ring (c) to draw the gear unit onto the shaft.

(2) Axial fastening
Pressure piece (b) is rotated and fitted against retaining ring (c) using fixing screw (a).

(3) Removing
Extractor (f) is fitted between the end face of the shaft and retainer ring (c). Tighten press-off screw (e) against the end of the shaft and pull the gear unit off the shaft.
Manufacturing drawings for the required parts are available on request. These parts are not included in the scope of supply.

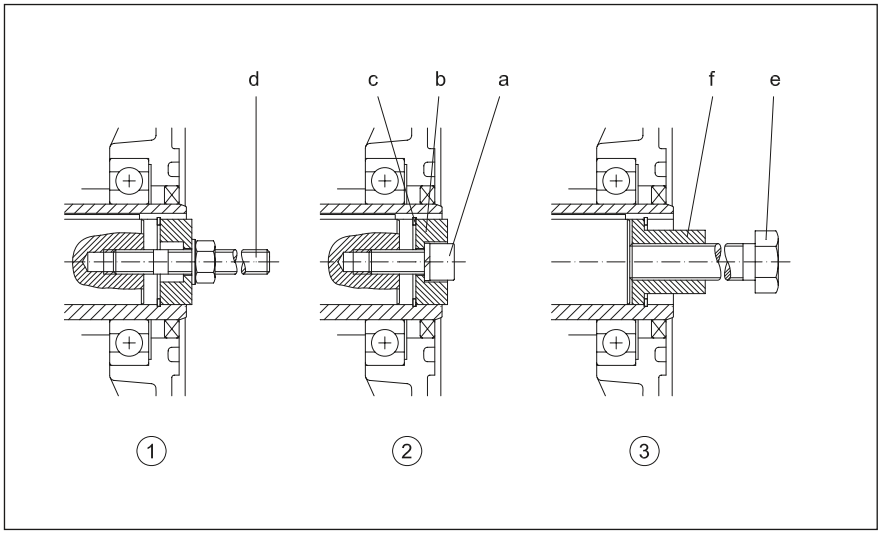

Detailed information on shaft-mounted gear units, bevel-gear units and worm-gear units is available (see chaper 11, 12., 13 dimensional drawings “Tools for fitting shaft-mounted gear with hollow shaft and keyway”).

Gear ventilation

The lifetime of the gearbox lubricant increases the better it is protected from negative environmental influences. Should the oil level or the gearbox ratio cause a very high lubricant temperature, the gearbox will be supplied as standard with a breather plug. Either on request or for corresponding high ambient temperatures, all gearboxes from size 10 can be supplied with a breather plug.

For the position of the threaded plugs see chapter 5 theraded plugs.

Output shaft seals

All size 10 and larger gears are available with double seals for the output shaft on request and at extra cost. Double seals are particularly effective if the output shaft points down and as protection against external influences

Lubricants

The drives are shipped ready-filled with gear lubricant. Lubricated in this way, the gear units are suitable for ambient temperatures in the range -20°C to + 40°C. The quantity of lubricant is optimised for the desired installed position as is stated on the nameplate. The type of lubricant is stated in the Operating Instructions. Lubricants for other temperature ranges or special applications available on request.

Wear-protective EP gear oils as indicated in the following table have proven particularly effective:

Manufacturer	Lubricant type					
	Mineral Oil	Synthetic Oil				USDA H1 Oil
	ISO VG 220	ISO VG 68		ISO VG 220	ISO VG 460	ISO VG 220
	Standard oil for gearboxes in the series **BF06-BF90 BG04-BG100 BK60-BK90**	Low temperature oil for gearboxes in the series **BF06-BF90 BG04-BG100**	**BK06-BK90 BM09-BM40 BS02-BS40**	Standard oil for gearboxes in the series **BS02-BS10 BK06-BK10 BM09-BM40** High temperature oil for gearboxes in the series **BS02-BS10 BK06-BK10 BF06-BF90 BG04-BG100 BK60-BK90 BM09-BM10**	Standard oil for gearboxes in the series **BS20-BS40 BK17-BK50 BM20-BM40** High temperature oil for gearboxes **BS20-BS40 BK17-BK50 BM20-BM40**	Food and Beverage Industry Oil for gearboxes in the series **BF06-BF90 BG04-BG100 BK06-BK90 BM09-BM40 BS02-BS40**
AGIP	BLASIA 220 [13 02 08]	–	–	BLASIA S 220 [13 02 06]	BLASIA S 460 [13 02 06]	–
BECHEM RHUS	STAROIL G 220 [13 02 08]	–	BERUSYNTH EP 68 [13 02 06]	BERUSYNTH EP 220 [13 02 06]	BERUSYNTH EP 460 [13 02 06]	BERUSYNTH EP 220 H1 [13 02 06]
CASTROL	ALPHA EP 220 [13 02 08] ALPHA SP 220 [13 02 08] OPTIGEAR EP 220 [13 02 08] OPTIGEAR 1100/220 [13 02 08]	Alphasyn T68 [13 02 06]	–	ALPHASYN PG 220 [13 02 06] OPTIGEAR 800/220 [13 02 06] OPTIGEAR 1300/220 [13 02 06] ALPHASYN GS 220 [13 02 06]	ALPHASYN PG 460 [13 02 06] OPTIGEAR 800/460 [13 02 06] OPTIGEAR 1300/460 [13 02 06] ALPHASYN GS 460 [13 02 06]	OPTILEB GT 220 (CLP-HC) [13 02 06] OPTILEB GT 1800/220 (CLP-PG) [13 02 08]
CHEVRON	Meropa 220 [13 02 08] GEARTEX EP-A SAE 85W-90 [13 02 06]	–	Meropa Synlube WS 68 [13 02 06]	Meropa Synlube WS 220 [13 02 06]	Meropa Synlube WS 460 [13 02 06]	Chevron lubricating oils FM 220 (USA) [13 02 06]
FUCHS	RENOLIN CLP 220 [13 02 08] RENOLIN CLPF 220 SUPER [13 02 08] RENOLIN CLP 220 PLUS [13 02 08]	RENOLIN UNISYN CLP 68 [13 02 06]	RENOLIN PG 68 [13 02 06]	RENOLIN PG 220 [13 02 06]	RENOLIN PG 460 [13 02 06]	CASSIDA FLUID GL 220 [13 02 06]
KLÜBER	KLÜBEROIL GEM 1-220 N [13 02 08]	–	KLÜBERSYNTH GH 6-80 [13 02 06]	KLÜBERSYNTH GH 6-220 [13 02 06]	KLÜBERSYNTH GH 6-460 [13 02 06]	KLÜBEROIL 4UH1-220 N [13 02 06] KLÜBERSYNTH UH1 6-220 [13 02 06]
MOBIL	MOBILGEAR 600 XP 220 [13 02 08]	MOBIL SHC 626 [13 02 06]	–	MOBIL SHC Gear 220 [13 02 06] MOBIL SHC 630 [13 02 06]	MOBIL SHC Gear460 [13 02 06] MOBIL SHC 634 [13 02 06]	MOBIL SHC CIBUS 220 [13 02 06]
OEST	Gearol 220 [13 02 06]	–	–	–	–	–
SHELL	OMALA S2 GX220 [13 02 08]	–	–	OMALA S4 WE 220 [13 02 06]	OMALA S4 WE 460 [13 02 06]	–
TOTAL	CARTER EP 220 [13 02 08] CARTER XEP 220 [13 02 06]	–	–	CARTER SY 220 [13 02 06]	CARTER SY 460 [13 02 06]	NEVASTANE SL220 [13 02 06] NEVASTANE EP 220 [13 02 06] NEVASTANE SY 220 [13 02 06]
WINTERSHALL	SRS ERSOLAN 220 [13 02 08]	–	–	–	–	–

[....] European Waste Catalogue Code (Decision 2001/118/CE)

Important:
Synthetic gear oils of a Polyglykol base (e.g. PGLP…) must be disposed of separately to mineral oil as **Special Waste .**

So long as the ambient temperature does not fall below – 20 °C the international definition of the viscosity class at 40 °C according to ISO 3448 and DIN 51519 ISO the viscosity class VG220 (SAE90) is recommended according, in North America AGMA 5EP.

For lower temperatures it is recommended to use oils of a lower nominal viscosity with a corresponding better starting characteristic, for instance a PGLP with a nominal viscosity VG68 (SAE80) or AGMA 2EP respectively. These types of oil can already be necessary at a temperature around the freezing point, if the break away torque of a drive is reduced by some smooth starting device or if the motor has a relatively low power.

Lubricant quantities

The preferred quantity of lubricant for the planned type of installation is stated on the motor‘s rating plate (symbol “oil can”). When topping up care should be taken to ensure that, depending on the fitting position, gearwheels and rolling contact bearings positioned at the top are also properly oiled. In special versions the oil level mark should be noted. Information about the quantity of lubricant required for other types of installation can be obtained from the factory.

Lubricant quantities, BG-series gears

Gear-housing with flange or foot

Flange (Code-2./Code-3./Code-4./Code-7.)
Foot with threaded holes (Code -6.)
Foot with clearance holes (Code-9.)
Completely machined (Code -8.)

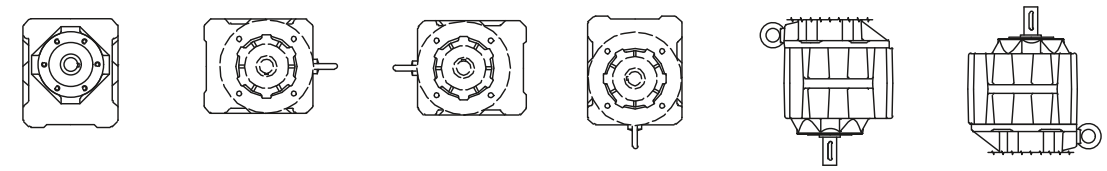

Foot housing

cast foot with clearance holes (Code -1.)

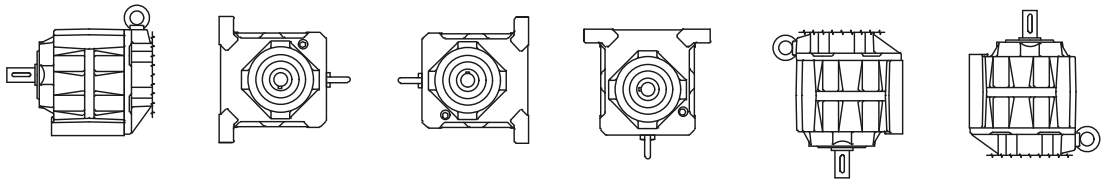

Gearbox type		H4	H1	H2	H3	V1	V2
BG04	*	0.03	0.03	0.03	0.03	0.55	0.55
	**	0.05	0.05	0.05	0.05	0.1	0.05
BG05	*	0.05	0.05	0.05	0.05	0.08	0.08
	**	0.08	0.08	0.08	0.08	0.16	0.8
BG06	*	0.08	0.08	0.08	0.08	0.15	0.15
	**	0.12	0.12	0.12	0.12	0.24	0.15
BG10	*	0.65	0.65	0.65	0.85	1.05	0.85
	**	0.45	0.45	0.45	0.6	0.75	0.6
BG15	**	0.4	0.4	0.4	0.35	0.62	0.55
BG20	*	0.8	0.8	0.8	1.1	1.4	1.1
	**	0.6	0.6	0.6	1.0	1.15	0.9
BG30	*	1.0	1.0	1.0	1.7	2.4	1.6
	**	1.0	1.0	1.0	1.7	2.3	1.7
BG40	*	1.7	1.7	1.7	2.5	3.5	2.1
	**	1.7	1.7	1.7	2.5	3.5	2.1
BG50	*	3.0	3.0	3.0	4.5	5.5	3.3
	**	3.0	3.0	3.0	4.5	5.5	3.3
BG60	*	5.5	5.5	5.5	7.0	10.9	6.4
	**	5.5	5.5	5.5	7.0	10.9	6.4
BG70		6.5	6.5	6.5	8.0	13.5	9.0
BG80		11.0	11.0	11.0	11.0	22.5	15.0
BG90		19.0	19.0	19.0	19.0	40.0	26.0
BG100		35.0	35.0	55.0	50.0	66.0	50.0

* Flange Housing
** Foot Housing

Lubrication quantity in litre

Lubricant quantities, BG20-01R

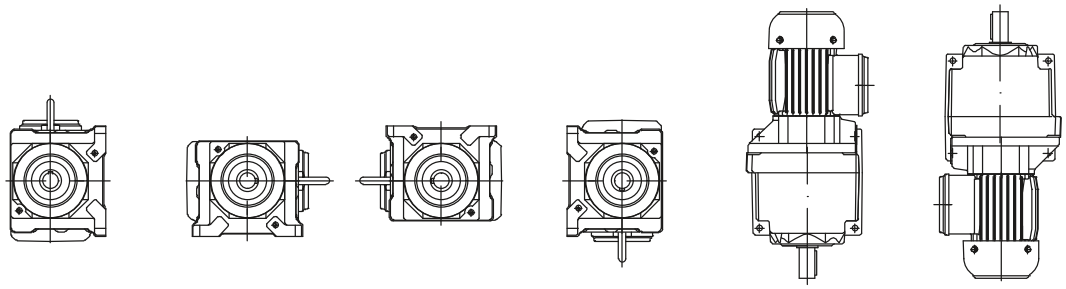

Gear type	H4	H1	H2	H3	V1	V2
BG20R	0.8	1.0	0.8	1.4	1.65	1.0
Lubrication quantity in litre						

Lubricants

Lubricant quantities, BF-series gears

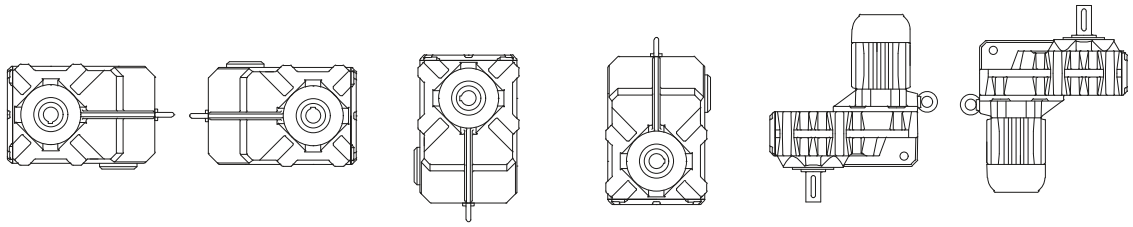

Gear type	H1	H2	H3	H4	V1	V2
BF06	0.25	0.25	0.25	0.37	0.35	0.3
BF10	0.85	0.85	0.85	1.1	1.45	1.5
BF20	1.3	1.3	1.3	1.7	2.2	2.25
BF30	1.7	1.7	1.7	2.2	3.2	3.0
BF40	2.7	2.7	2.7	3.5	4.9	4.8
BF50	3.8	3.8	3.8	5.0	6.7	6.7
BF60	6.7	6.7	6.7	9.0	12.3	12.0
BF70	12.2	12.2	12.2	16.0	24.2	21.8
BF80	17.0	17.0	17.0	21.0	32.2	27.5
BF90	32.0	32.0	32.0	41.0	62.0	53.0
Lubrication quantity in litre						

Lubricant quantities, BK-series gears

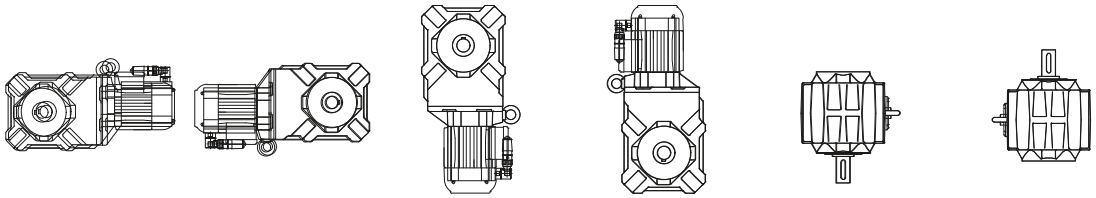

Gear type	H1	H2	H3	H4	V1	V2
BK06	0.15	0.23	0.29	0.31	0.18	0.23
BK10	0.83	0.83	0.92	1.75	0.92	0.92
BK17	1.0	1.7	1.8	2.6	1.3	1.8
BK20	1.5	1.5	1.6	2.9	1.65	1.65
BK30	2.2	2.2	2.3	4.4	2.4	2.4
BK40	3.5	3.5	3.5	7.0	3.7	3.7
BK50	5.8	5.8	5.8	1.5	6.0	6.0
BK60	6.0	8.7	6.9	12.0	8.6	8.6
BK70	10.2	15.0	11.5	20.5	13.5	14.5
BK80	18.0	25.5	19.0	37.0	23.5	25.5
BK90	33.0	48.0	36.0	69.0	45.0	48.0
Lubrication quantity in litre						

Lubricant quantities, BS-series gears

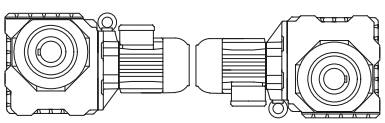
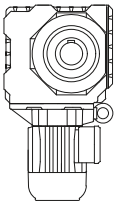
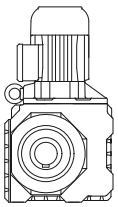
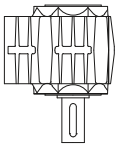
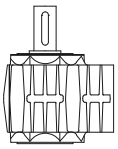

Gear type	H1	H2	H3	H4	V1	V2
BS02	0.06	0.06	0.06	0.06	0.06	0.06
BS03	0.17	0.17	0.17	0.17	0.17	0.17
BS04	0.11	0.17	0.11	0.2	0.11	0.11
BS06	0.24	0.36	0.24	0.45	0.24	0.24
BS10	0.9	1.3	0.9	1.6	0.9	0.9
BS20	1.5	2.1	1.5	2.7	1.5	1.5
BS30	2.2	3.0	2.2	3.8	2.2	2.2
BS40	3.5	4.7	3.5	6.0	3.5	3.5

Lubrication quantity in litre

Lubricant quantities, pre-stage gears (Z)

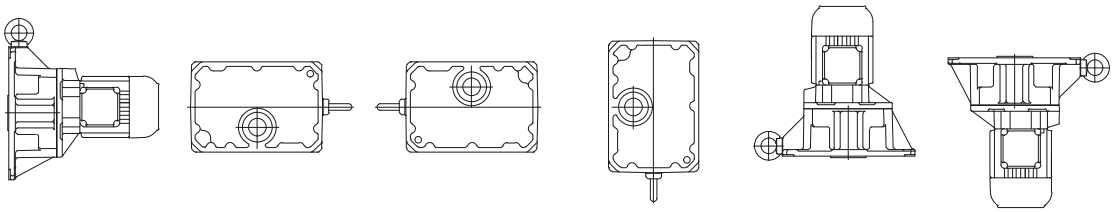

BF BG	H4	H1	H2	H3	V1	V2
BK BS	H1	V1	V2	H2	H4	H3
Gear type						
BG10Z BF10Z BK10Z BS10Z	0.10	0.05	0.12	0.07	0.16	0.07
BG20Z BF20Z BK20Z BS20Z	0.15	0.07	0.19	0.17	0.27	0.10
BG30Z BF30Z BK30Z BS30Z BM30Z	0.2*	0.10	0.35	0.22	0.35	0.19
BG40Z BF40Z BK40Z BS40Z BM40Z	0.32*	0.17	0.50	0.37	0.6	0.32
BG50Z BF50Z BK50Z	0.5	0.3	0.92	0.7	1.15	0.5
BG60Z BF60Z BK60Z	0.9	0.5	1.55	1.1	2.0	0.7
BG70Z BF70Z BK70Z BF80Z	1.2	0.6	1.8	1.6	2.4	1.4
BG80Z BF90Z BK80Z BG100Z	3.1	1.3	4.0	2.6	5.2	2.0
BG90Z BK90Z	4.2	1.5	5.4	3.5	7.7	3.0

*: with BM30Z/BM40Z the pre-stage lubricant is filled via the main gearbox.

Lubrication quantity in litre

Lubrication quantity for intermediate gear

Definition of the terminal box position

Terminal box position for intermediate gear is similar to the main gearbox that means

Main gearbox BG, BF terminal box pos. I -> intermediate gearbox terminal box pos. I

Main gearbox BK, BS terminal box pos. II -> intermediate gearbox terminal box pos. II

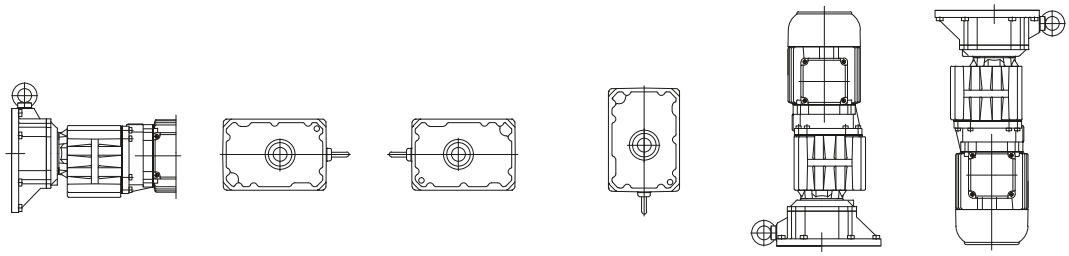

Mounting position of main gearbox							
	BF	H4	H1	H2	H3	V1	V2
	BG	B3/B5	B6	B7	B8	V5/H5	V6/H6
	BK	H1	V1	V2	H2	H4	H3
	BS						
Type designation of double gearbox combination							
BG06G04 BK06G04 BS06G04		0.03	0.03	0.03	0.03	0.05	0.05
BG10G06 BF10G06 BK10G06 BS10G06		0.08	0.08	0.08	0.08	0.15	0.15
BG20G06 BF20G06 BK20G06 BS20G06		0.08	0.08	0.08	0.08	0.15	0.15
BG30G06 BF30G06 BK30G06 BS30G06		0.08	0.08	0.08	0.08	0.15	0.15
BG40G10 BF40G10 BK40G10 BS40G10		0.65	0.65	0.65	0.85	1.05	0.85
BG50G10 BF50G10 BK50G10		0.65	0.65	0.65	0.85	1.05	0.85
BG60G20 BF60G20 BK60G20		0.8	0.8	0.8	1.1	1.4	1.1
BG70G20 BF70G20 BK70G20		0.8	0.8	0.8	1.1	1.4	1.1
BG80G40 BF80G40 BK80G40		1.7	1.7	1.7	2.5	3.3	2.1
BG90G50 BF90G50 BK90G50 BG100G50		3.0	3.0	3.0	4.5	5.5	3.3
Lubrication quantity in litre							

Position of threaded plugs
-BG-series gears

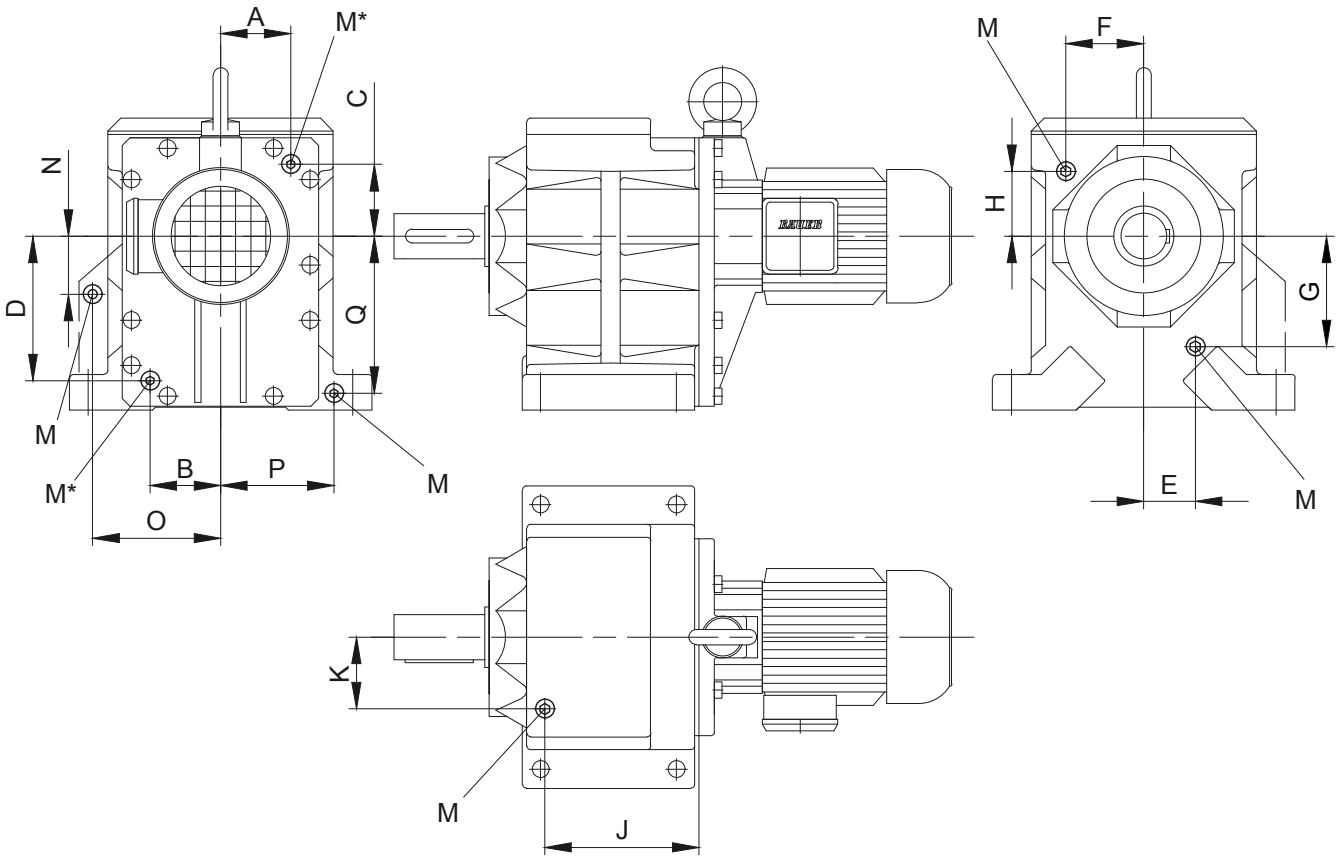

Typ		A	B	C	D	E	F	G	H	J	K	N	O	P	Q	M
BG10	Foot housing	see position of the oil drain and filler plugs on the system cover	Tab.I-Tab.III size B.10			33	42	48	41,5	-	-	-	-	-	-	M10x1
BG10	Flange housing		Tab.I-Tab.III size B.10			27	-	73	-	-	-	-	-	-	-	M10x1
BG15	Foot housing		Tab.I-Tab.III size B.10			-	-	-	-	-	-	-	-	-	-	-
BG20	Foot housing		Tab.I-Tab.III size B.20			-	47	-	52,5	-	-	-	-	-	-	M10x1
BG20	Flange housing		Tab.I-Tab.III size B.20			-	28	-	68	-	-	-	-	-	-	-
BG30	Foot housing		Tab.I-Tab.III size B.30			-	54	-	58	-	-	-	-	-	-	M10x1
BG30	Flange housing		Tab.I-Tab.III size B.30			-	58	-	48	-	-	-	-	-	-	M10x1
BG40	Foot housing		Tab.I-Tab.III size B.40			-	75	-	48	-	-	-	-	-	-	M14x1,5
BG40	Flange housing		Tab.I-Tab.III size B.40			-	75	-	48	-	-	-	-	-	-	M14x1,5
BG50	Foot housing		Tab.I-Tab.III size B.50			-	53	-	100	-	-	-	-	-	-	M14x1,5
BG50	Flange housing		Tab.I-Tab.III size B.50			-	53	-	100	-	-	-	-	-	-	M14x1,5
BG60	Foot housing		Tab.I-Tab.III size B.60			-	70	-	119	-	-	-	-	-	-	M20x1,5
BG60	Flange housing		Tab.I-Tab.III size B.60			-	70	-	119	-	-	-	-	-	-	M20x1,5
BG70			Tab.I-Tab.III size B.70			-	103	-	86	204	95	-	-	-	-	M20x1,5
BG80			Tab.I-Tab.III size B.80			-	133	-	110	237	111	-	-	-	-	M20x1,5
BG90			Tab.I-Tab.III size B.90			-	165	-	124	297	140	-	-	-	-	M24x1,5
BG100			Tab.I-Tab.III size B.80			-	202	-	128	420	165	135	263	202	293	M24x1,5

M = Plug according to DIN 908
Dimensions in millimetres (mm)

M* = Size and position of the drain plug see page 79.

Threaded plugs

Position of threaded plugs
-BG-20-01R

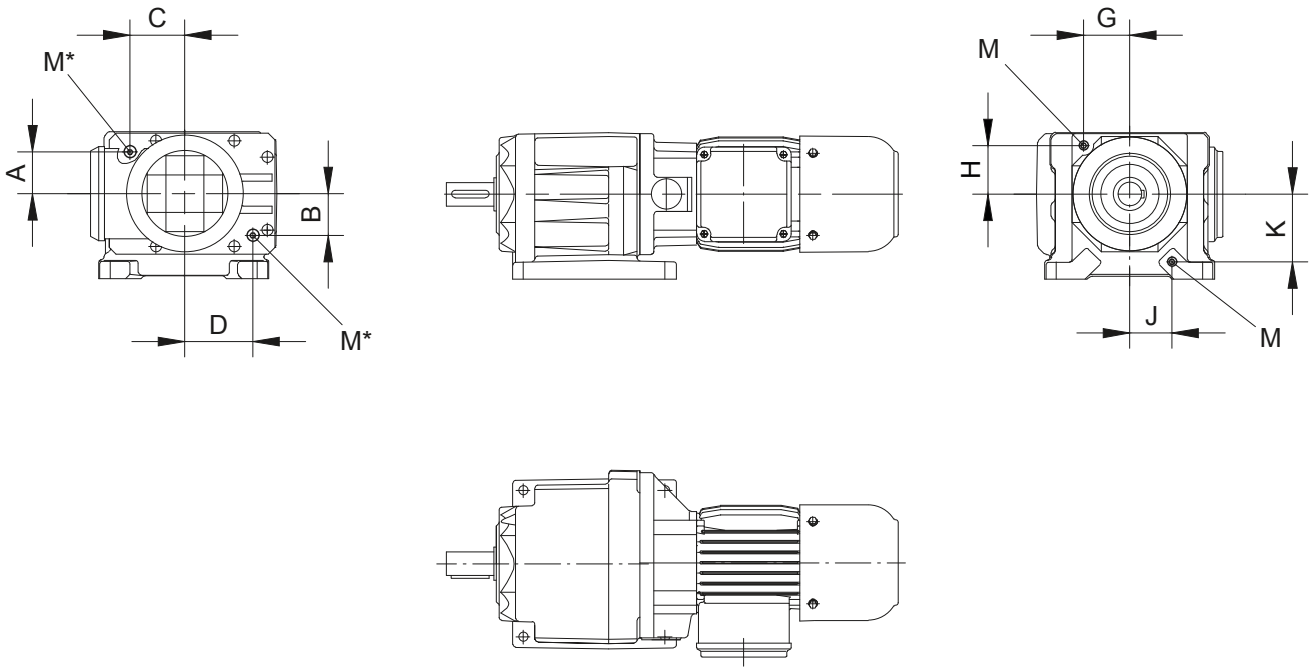

Type	A	B	C	D	G	H	J	K	M
BG20-01R Roller table	see position of the oil drain and filler plugs on the system cover Tab.I-Tab.III size B20				48,5	51,5	45	71,5	M10x1
M = Plug according to DIN 908 Dimensions in millimetres (mm)									

M* = Size and position of the drain plug see page 79.

Position of threaded plugs
-BF-series gears

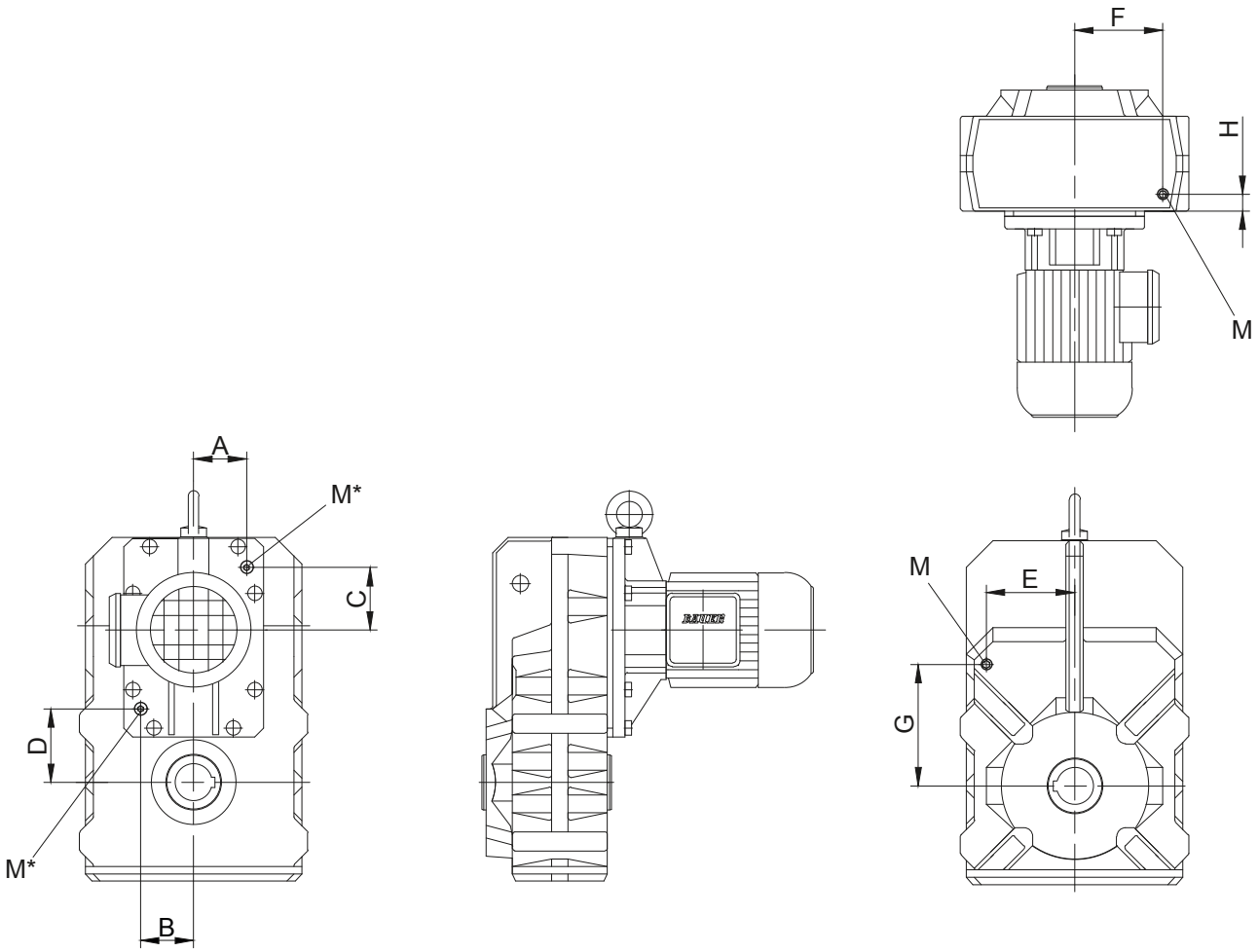

Type	A	B	C	D	E	F	G	H	M
BF06	see position of the oil drain and filler plugs on the system cover	on request							
BF10		Tab.I-Tab.III size		B.10	64	65	97	28	M10x1
BF20		Tab.I-Tab.III size		B.20	77	70	115	30,5	M10x1
BF30		Tab.I-Tab.III size		B.30	88	82	125	36,5	M10x1
BF40		Tab.I-Tab.III size		B.40	100	86	141	33	M14x1,5
BF50		Tab.I-Tab.III size		B.50	120	105	165	42,5	M14x1,5
BF60		Tab.I-Tab.III size		B.60	140	145	200	50,5	M20x1,5
BF70		Tab.I-Tab.III size		B.70	165	177	235	52,5	M20x1,5
BF80		Tab.I-Tab.III size		B.70	145	148	255	123	M20x1,5
BF90		Tab.I-Tab.III size		B.80	155	176	347,5	260	M24x1,5
M = Plug according to DIN 908 Dimensions in millimetres (mm)									

M* = Size and position of the drain plug see page 79.

Threaded plugs

Position of threaded plugs
-BK-series gears

BK10 - BK50

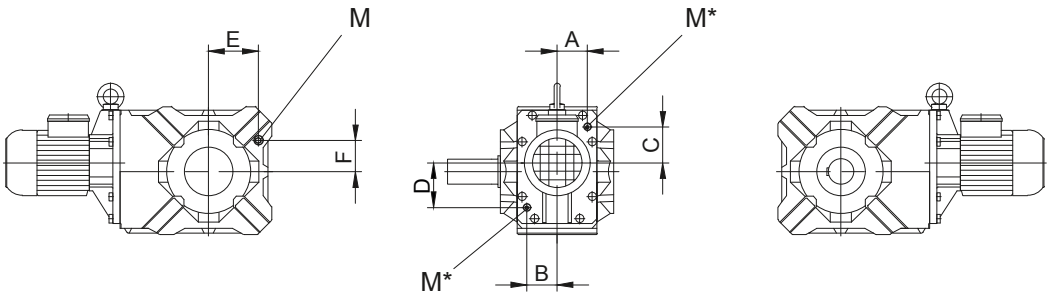

BK60 - BK90

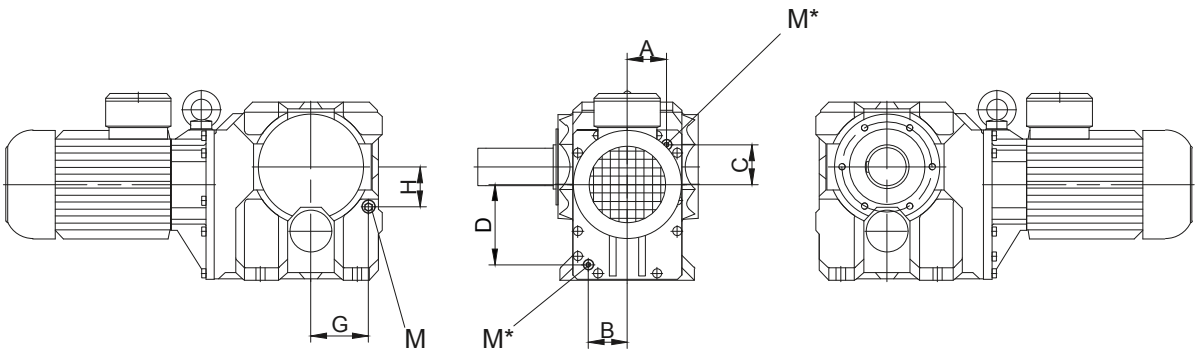

Type	A	B	C	D	E	F	G	H	M
BK06	see position of the oil drain and filler plugs on the system cover	on request							
BK10		Tab.I-Tab.III size B.10			62	32,5	-	-	M10x1
BK20		Tab.I-Tab.III size B.20			73,5	37,5	-	-	M10x1
BK30		Tab.I-Tab.III size B.30			80	43	-	-	M10x1
BK40		Tab.I-Tab.III size B.40			88	49	-	-	M14x1,5
BK50		Tab.I-Tab.III size B.50			118	74	-	-	M14x1,5
BK60		Tab.I-Tab.III size B.60			-	-	93	87	M20x1,5
BK70		Tab.I-Tab.III size B.70			-	-	137	95	M20x1,5
BK80		Tab.I-Tab.III size B.80			-	-	150	117	M20x1,5
BK90		Tab.I-Tab.III size B.90			-	-	208	135	M24x1,5

M = Plug according to DIN 908
Dimensions in millimetres (mm)

M* = Size and position of the drain plug see page 79.

Position of threaded plugs
-BS-series gears

BS10 - BS20

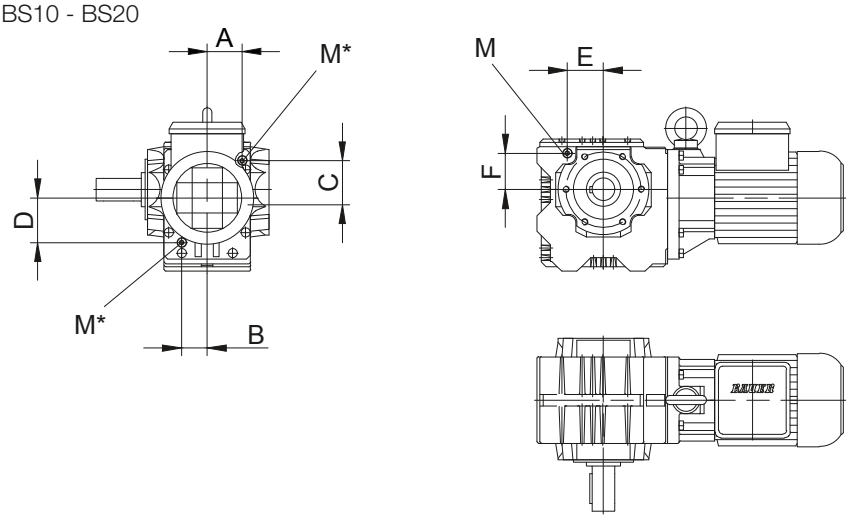

BS30 - BS40

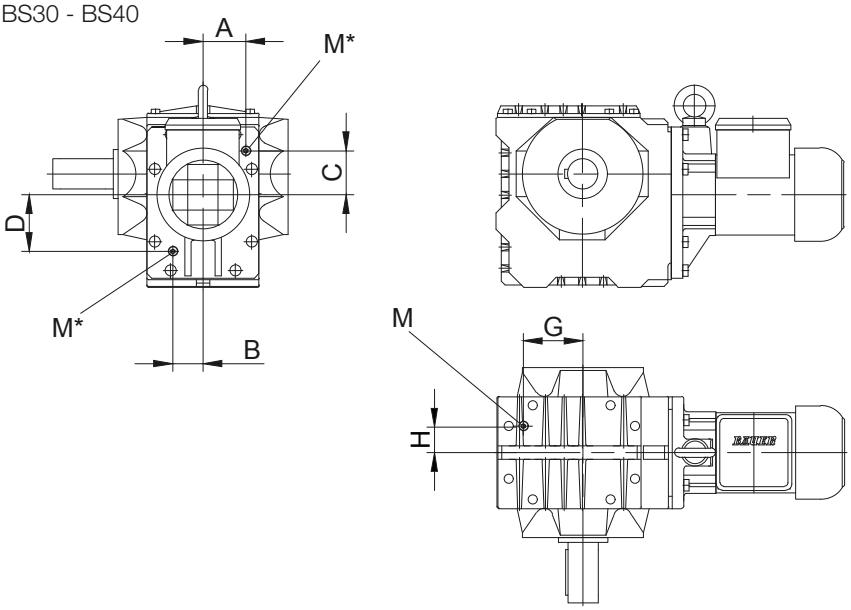

Type	A	B	C	D	E	F	G	H	M
BS10	see position of the oil drain and filler plugs on the system cover	Tab.I-Tab.III size B.10			48	50	-	-	M10x1
BS20		Tab.I-Tab.III size B.20			59	63	-	-	M10x1
BS30		Tab.I-Tab.III size B.30			-	-	79	35	M10x1
BS40		Tab.I-Tab.III size B.40			-	-	93,5	41,5	M14x1,5
M = Plug according to DIN 908 Dimensions in millimetres (mm)									

M* = Size and position of the drain plug see page 79.

Threaded plugs

Position of threaded plugs
-pre-stage gears (Z)

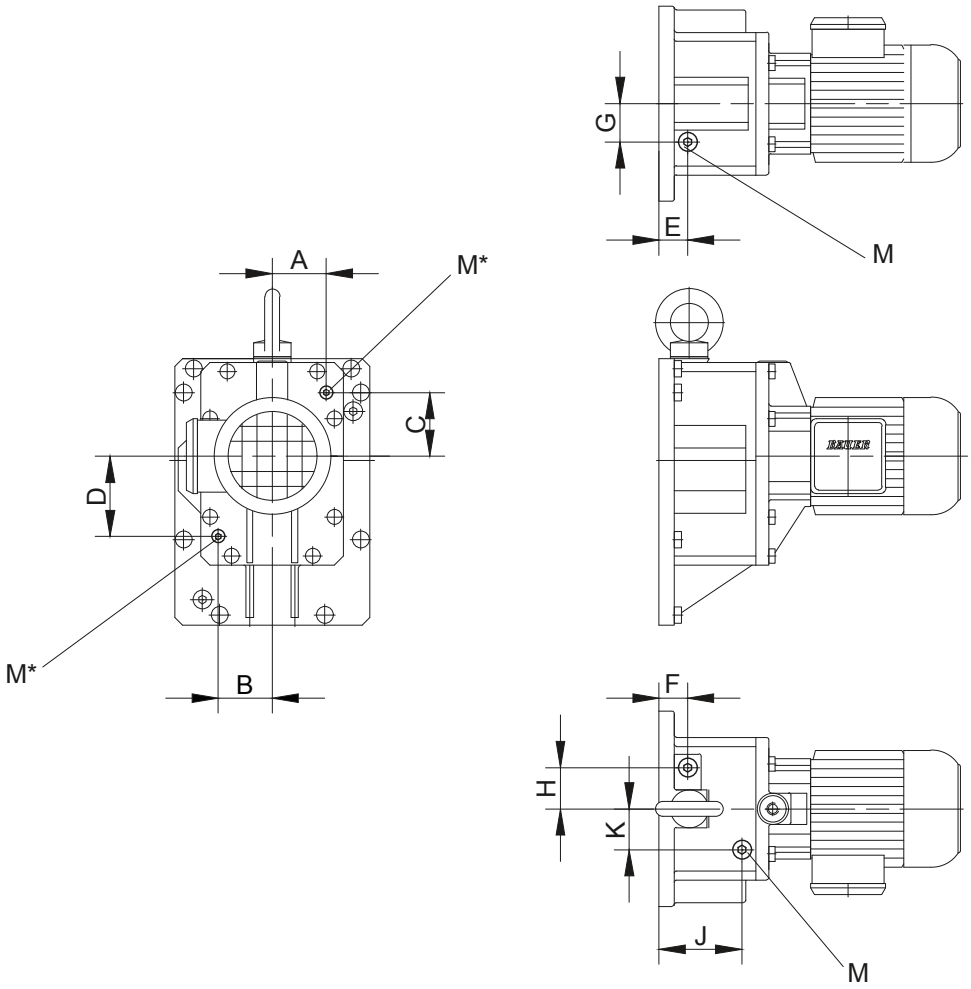

Gear	A	B	C	D	E	F	G	H	J	K	M
BG10(Z);BK10(Z)	-	-	-	-	25	-	17,5	-	44	25	M10x1
BF10(Z);BS10(Z)											
BG20(Z);BK20(Z)	-	-	-	-	49	-	28,5	-	23,5	28	M10x1
BF20(Z);BS20(Z)											
BG30(Z);BK30(Z)	see position of the oil drain and filler plugs on the system cover	Tab.I and Tab.III size B10			-	24	-	30	-	-	M10x1
BF30(Z);BS30(Z)											
BG40(Z);BK40(Z)		Tab.I and Tab.III size B20			-	27,5	-	36,5	-	-	M14x1,5
BF40(Z);BS40(Z)											
BG50(Z);BK50(Z)		Tab.I and Tab.III size B30			-	-	-	-	29	43	M14x1,5
BF50(Z)											
BG60(Z);BK60(Z)		Tab.I and Tab.III size B40			-	33	-	48	-	-	M20x1,5
BF60(Z)											
BG70(Z);BK70(Z)		Tab.I and Tab.III size B50			-	38	-	55	-	-	M20x1,5
BF70(Z);BF80(Z)											
BG80(Z);BK80(Z)		Tab.I and Tab.III size B60			-	45	-	-	-	-	M20x1,5
BF90(Z);BG100(Z)											
BG90(Z);BK90(Z)		Tab.I and Tab.III size B70			-	-	-	-	-	-	M24x1,5
M = Plug according to DIN 908 Dimensions in millimetres (mm)											

M* = Size and position of the drain plug see page 79.

Position of threaded plugs
-in the System Cover Design with Standard Geared Motor

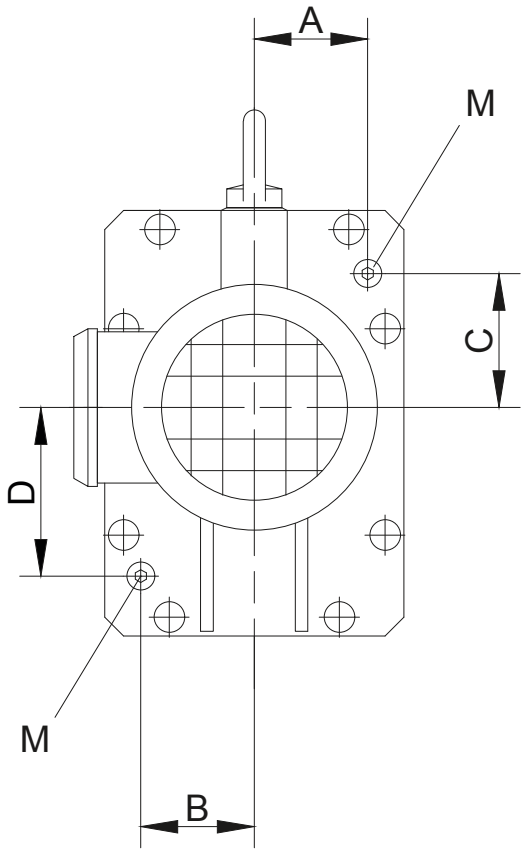

Table I: Design with Standard Geared Motor

Gear	Size	A	B	C	D	M
BG10(Z); BK10(Z); BF10(Z);BS10(Z)	D05-D..09	36	34	43,5	59	M10x1
BG15	D05-D..09	36	34	43,5	59	M10x1
BG20(Z); BK20(Z); BF20(Z);BS20(Z)	D05-D..09	44	44	58	72,5	M10x1
BG30(Z); BK30(Z); BF30(Z);BS30(Z)	D05-D..09	56,5	40	58,2	75	M10x1
BG40(Z); BK40(Z); BF40(Z);BS40(Z)	D..08-D..11	66	71	71	94	M14x1,5
BG50(Z); BK50(Z);	D..08-D..11	72	74	85	109	M14x1,5
BF50(Z);	D..13-D..16	78	74	82	109	M14x1,5
BG60(Z); BK60(Z);	D..09-D..13	84	81	120	155	M20x1,5
BF60(Z);	D..16	86	81	120	155	M20x1,5
BG70(Z); BK70(Z); BF70(Z);BF80(Z)	D..09-D..18	95	85	97	193	M20x1,5
BG80(Z); BK80(Z); BF90(Z);BG100(Z)	D..11-D..18	118	118	110	245	M20x1,5
BG90(Z); BK90(Z);	D..13-D..18	145	145	116	294	M24x1,5
M = Plug according to DIN 908 Dimensions in millimetres (mm)						

Position of the drain plugs for BG, BK, BS and BF gear ranges and pre-stages.

Threaded plugs

Position of threaded plugs
-in the System Cover Design with foreign motor or gear design with input shaft

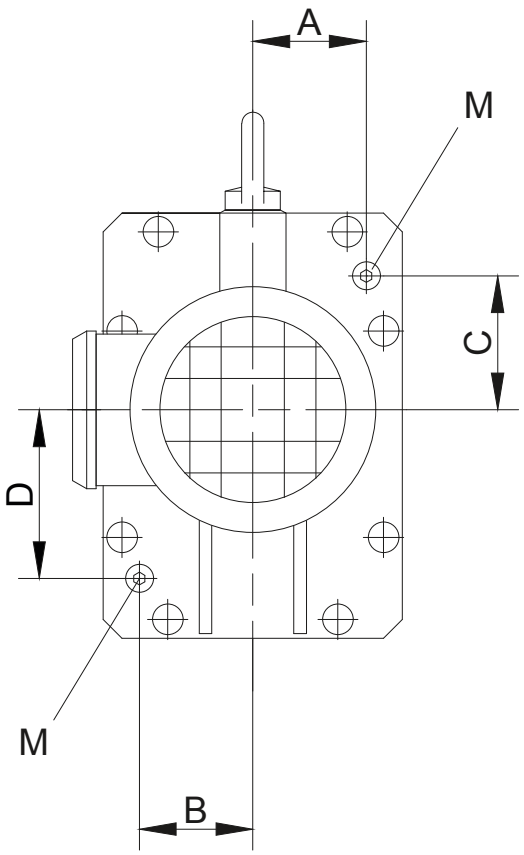

Table II: Design with foreign motor or gear design with input shaft

Gear	A	B	C	D	M
BG10(Z); BK10(Z); BF10(Z);BS10(Z)	34	34	40,5	57	M10x1
BG15	34	34	40,5	57	M10x1
BG20(Z); BK20(Z); BF20(Z);BS20(Z)	44	44	57	72	M10x1
BG30(Z); BK30(Z); BF30(Z);BS30(Z)	58,5	41	57,6	77	M10x1
BG40(Z); BK40(Z); BF40(Z);BS40(Z)	69	73	70	97	M14x1,5
BG50(Z); BK50(Z); BF50(Z);	75	75	82	110	M14x1,5
BG60(Z); BK60(Z); BF60(Z);	84	81	119	155	M20x1,5
BG70(Z); BK70(Z); BF70(Z);BF80(Z)	96	95	96	193	M20x1,5
BG80(Z); BK80(Z); BF90(Z);BG100(Z)	118	118	110	245	M20x1,5
BG90(Z); BK90(Z);	145	145	116	294	M24x1,5
M = Plug according to DIN 908 Dimensions in millimetres (mm)					

Position of the drain plugs for BG, BK, BS and BF gear ranges and pre-stages.

Position of threaded plugs
-in the System Cover Design with pre-stage Z

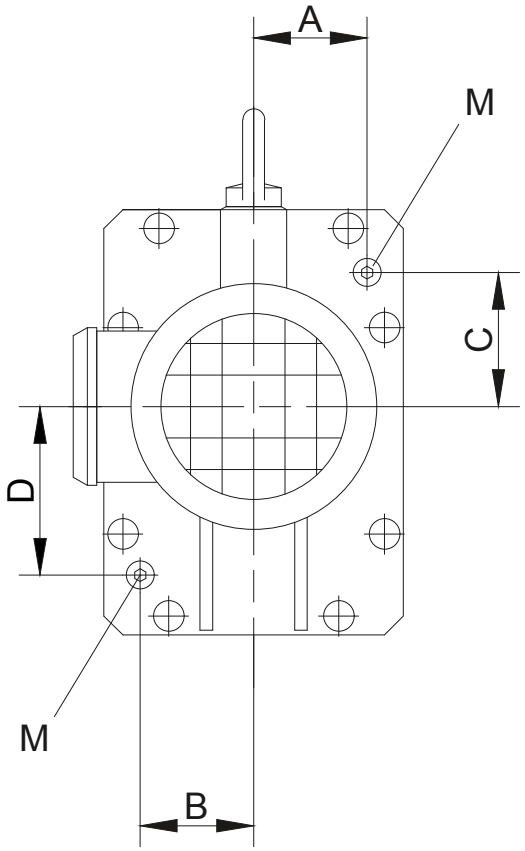

Table III: Design with pre-stage Z

Gear	A	B	C	D	M
B.10	38	39,5	44	61,5	M10x1
B.20	44	44	58	72	M10x1
B.30	59	42	58,2	77	M10x1
B.40	66	71	71	96	M14x1,5
B.50	72	73	85	111	M14x1,5
B.60	85	81	120	192	M20x1,5
B.70	95	95	97	193	M20x1,5
B.80	118	118	110	245	M20x1,5
B.90	139	139	124	302	M24x1,5
M = Plug according to DIN 908 Dimensions in millimetres (mm)					

Position of the drain plugs for BG, BK, BS and BF gear ranges and pre-stages.

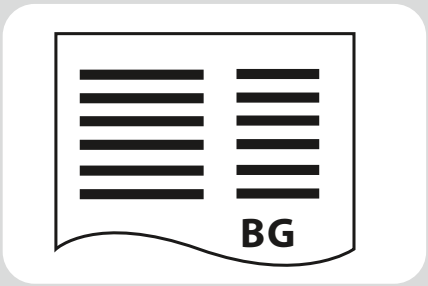

6

BG-series helical-geared motors - Selection

Description of helical-geared units 85
Sizes 85
Bauer service factors (f_B) for helical-geared motors 85
Continuous operation without switching frequency Z ≤1/h 85
Switching duty 85
Bauer service factor 85
Explanation of shock classification 86
Key to abbreviations 86
Selection tables, helical-geared motors 86
Selection helical-geared motors DSE - IE1 87
Selection helical-geared motors DHE - IE2 129
Selection helical-geared motors DPE - IE3 174

Sizes

Bauer BG-series helical-geared motors are available in 13 standard sizes with torques from 20 Nm to 18,500 Nm. Higher torques are available on request. The geared unit is accommodated in a sturdy cast housing.

Bauer service factors (f_B) for helical-geared motors

Of the numerous factors influencing the total loading of a geared unit, the most important include:

- Mean torque (rated torque)
- Daily operating hours
- Severity of torque peaks (shock classification)
- Frequency of torque peaks (switching duty)

These factors can be represented in a simplified and practical manner by **service factors**. The tables and explanations below aim to provide an objective description of the **shock classification**, rather than a classification of the driven machinery. Experience has shown that, in addition to the torque shocks caused by the driven machinery (M_x/M_N), above all the power transmission components (clutches, chains etc.) plus the mass ratios play a decisive role in this.

See Bauer special imprint SD32 for more information (available on request).

Continuous operation without switching frequency Z ≤1/h

Factor f1 for shock classification and operating time

Shock classification	Operating hours per day t_d	>4 h	>8 h	>16 h
		≤8 h	≤16 h	≤24 h
I		0,8	1,0	1,2
II		1,05	1,25	1,45
III		1,45	1,55	1,7

Switching duty

Factor f2 for shock classification and switching frequency

Switching frequency in single-shift operation t_d ≤8 h/d

Shock classification	1 <Z ≤100	100 <Z ≤1000	1000 <Z
I	0,95	1,1	1,15
II	1,2	1,35	1,4
III	1,55	1,6	1,6

Switching frequency in multiple-shift operation t_d >8 h/d

Shock classification	1 <Z ≤100	100 <Z ≤1000	1000 <Z
I	1,3	1,45	1,5
II	1,5	1,6	1,65
III	1,75	1,8	1,8

Bauer service factor

Bauer service factor $f_B = f_1$ or $f_B = f_2$

For example: Shock classification II for Z = 100 switching operations per hour and multiple-shift operation yields a service factor $f_B = f_2 = 1.5$

Explanation of shock classification

Shock classification I:

Uniform without shock loads. All the following requirements must be satisfied:
- FI ≤1,3
- M_x/M_N ≤1,0
- Shock-absorbing power transmission components (e.g. highly resilient, zero-play coupling, φ N≥ 5°)

Shock classification II:

Moderate shock loads. At least one of the following conditions applies:
- 1,3 <FI ≤4
- 1 <M_x/M_N ≤1,6
- Shock-neutral power transmission components (e.g. gear wheels, zero- play rigid coupling or resilient coupling with φ N <5°)

Shock classification III:

Heavy shock loads. At least one of the following conditions applies:
- FI >4
- 1,6 <M_x/M_N ≤2,0
- Shock-amplifying power transmission components (e.g. coupling with play or chain drive)

Key to abbreviations

Z	Switching duty number of switching operations per hour
t_d	Daily operating time in hours (h/d)
FI	Factor of inertia FI = $(J_{ext} + J_{rot})/J_{rot}$
J_{ext}	Mass moment of inertia of the machine to be driven, in relation to the motor's rotor shaft (kgm^2)
J_{rot}	Mass moment of inertia of the motor rotor (kgm^2)
M_x	Highest impact torque above the static torque which can occur during normal operation or in emergency situations
M_N	Required static load torque for the application
M_x/M_N	Relative torque - Factor
φ_N	Torsional offset of the resilient coupling under rated torque

Selection tables, helical-geared motors

Key to abbreviations

P	Rated output Power
n_2	Rated speed of the output shaft
i	Gear reduction ratio
M_2	Rated torque at the output shaft
f_B	Bauer service factor
F_{RN}	Maximum permissible radial force with a standard solid shaft (Code -.1 and -.7)
F_{RV}	Maximum permissible radial force with reinforced bearings in each case with standard solid shaft (Code -.1 and -.7)

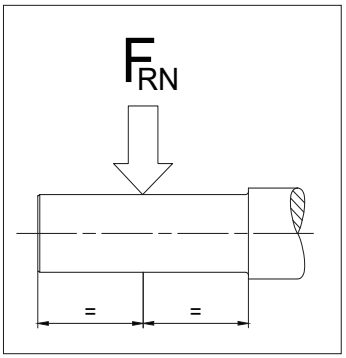

Use the selection tables to determine the size of geared motor required. The codes clearly define the Type of gear (see chapter 10 “dimensional drawings, helical-geared motors”).

Motor power overload protection

Motor-power ratings, particularly in conjunction with four-stage and multi-stage gear units, are more than ample in some instances. Consequently, and in much the same way as with low-power motors, rated current is not a measure of gear loading and cannot be used to protect the gear unit against overloading. It is advisable to provide gears at risk from excessive load or blockage with a protective mechanism (e. g., slip clutch, slip hub, shear pin or an alternative).

0.03 kW

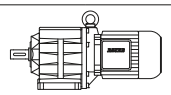

P_N	50 Hz			i	Type	m	F_{RN}	F_{RV}
	n_2	M_2	f_B					
[kW]	[1/min]	[Nm]	[—]	[:1]		[kg]	[N]	[N]
0.03	540	0.53	7.5	2.51	**BG04-../D04LA4**	4.4	340	-
0.03	370	0.77	6.5	3.65	**BG04-../D04LA4**	4.4	390	-
0.03	310	0.92	7.6	4.39	**BG04-../D04LA4**	4.4	380	-
0.03	255	1.12	8.0	5.36	**BG04-../D04LA4**	4.4	380	-
0.03	220	1.3	8.5	6.18	**BG04-../D04LA4**	4.4	415	-
0.03	205	1.39	7.2	6.67	**BG04-../D04LA4**	4.4	410	-
0.03	199	1.43	7.7	6.80	**BG04-../D04LA4**	4.4	420	-
0.03	158	1.81	6.1	8.58	**BG04-../D04LA4**	4.4	410	-
0.03	150	1.91	6.3	9.00	**BG04-../D04LA4**	4.4	470	-
0.03	137	2.05	6.3	9.90	**BG04-../D04LA4**	4.4	480	-
0.03	125	2.25	6.2	10.82	**BG04-../D04LA4**	4.4	480	-
0.03	114	2.5	6.0	11.90	**BG04-../D04LA4**	4.4	490	-
0.03	108	2.65	5.7	12.55	**BG04-../D04LA4**	4.4	490	-
0.03	103	2.75	5.8	13.20	**BG04-../D04LA4**	4.4	500	-
0.03	93	3.05	5.6	14.52	**BG04-../D04LA4**	4.4	510	-
0.03	83	3.45	5.2	16.44	**BG04-../D04LA4**	4.4	530	-
0.03	75	3.8	4.7	18.08	**BG04-../D04LA4**	4.4	540	-
0.03	64	4.45	4.3	21.12	**BG04-../D04LA4**	4.4	560	-
0.03	59	4.85	4.1	23.23	**BG04-../D04LA4**	4.4	600	-
0.03	56	5.1	3.9	24.45	**BG04-../D04LA4**	4.4	610	-
0.03	51	5.6	3.6	26.89	**BG04-../D04LA4**	4.4	650	-
0.03	44	6.5	3.1	30.91	**BG04-../D04LA4**	4.4	690	-
0.03	40	7.1	2.8	34.00	**BG04-../D04LA4**	4.4	720	-
0.03	38.5	7.4	2.7	35.35	**BG04-../D04LA4**	4.4	730	-
0.03	35	8.1	2.5	38.89	**BG04-../D04LA4**	4.4	750	-
0.03	32	8.9	2.2	42.24	**BG04-../D04LA4**	4.4	750	-
0.03	29.5	9.7	2.1	46.47	**BG04-../D04LA4**	4.4	750	-
0.03	28.5	10	2.0	47.52	**BG04-../D04LA4**	4.4	750	-
0.03	26	11	1.8	52.28	**BG04-../D04LA4**	4.4	750	-
0.03	25	11.4	1.75	54.97	**BG04-../D04LA4**	4.4	750	-
0.03	22.5	12.7	1.55	60.47	**BG04-../D04LA4**	4.4	750	-
0.03	31	9.2	3.3	43.57	**BG05-../D04LA4**	5.1	900	-
0.03	29	9.8	3.1	47.00	**BG05-../D04LA4**	5.1	930	-
0.03	26.5	10.8	2.8	51.27	**BG05-../D04LA4**	5.1	970	-
0.03	25.5	11.2	2.7	53.44	**BG05-../D04LA4**	5.1	980	-
0.03	23.5	12.1	2.5	58.30	**BG05-../D04LA4**	5.1	1000	-
0.03	18	13.8	2.9	75.99	**BG06G04-../D04LA4**	8.4	1070	-
0.03	16.5	15	2.9	82.89	**BG06G04-../D04LA4**	8.4	1070	-
0.03	15	16.5	2.7	93.00	**BG06G04-../D04LA4**	8.4	1070	-
0.03	13.5	18.4	2.4	101.5	**BG06G04-../D04LA4**	8.4	1070	-
0.03	11.5	21	2.1	122.0	**BG06G04-../D04LA4**	8.4	1070	-
0.03	9.1	26	1.75	149.0	**BG06G04-../D04LA4**	8.4	1070	-
0.03	7.3	33.5	1.35	185.4	**BG06G04-../D04LA4**	8.4	1070	-
0.03	5.4	46	0.98	250.2	**BG06G04-../D04LA4**	8.4	1070	-
0.03	5.0	50	0.9	275.2	**BG06G04-../D04LA4**	8.4	1070	-
0.03	4.1	45*	1.0	330.8	**BG06G04-../D04LA4**	8.4	1070	-
0.03	3.7	45*	1.0	367.0	**BG06G04-../D04LA4**	8.4	1070	-
0.03	3.0	45*	1.0	457.0	**BG06G04-../D04LA4**	8.4	1070	-
0.03	2.7	45*	1.0	502.6	**BG06G04-../D04LA4**	8.4	1070	-
0.03	2.3	45*	1.0	587.1	**BG06G04-../D04LA4**	8.4	1070	-
0.03	2.1	45*	1.0	645.8	**BG06G04-../D04LA4**	8.4	1070	-
0.03	1.9	45*	1.0	747.5	**BG06G04-../D04LA4**	8.4	1070	-
0.03	1.6	45*	1.0	859.3	**BG06G04-../D04LA4**	8.4	1070	-
0.03	1.5	45*	1.0	945.2	**BG06G04-../D04LA4**	8.4	1070	-
0.03	1.3	45*	1.0	1081	**BG06G04-../D04LA4**	8.4	1070	-
0.03	1.2	45*	1.0	1174	**BG06G04-../D04LA4**	8.4	1070	-
0.03	1.1	45*	1.0	1321	**BG06G04-../D04LA4**	8.4	1070	-
0.03	0.9	45*	1.0	1528	**BG06G04-../D04LA4**	8.4	1070	-
0.03	0.85	45*	1.0	1681	**BG06G04-../D04LA4**	8.4	1070	-
0.03	0.7	45*	1.0	1948	**BG06G04-../D04LA4**	8.4	1070	-
0.03	0.65	45*	1.0	2126	**BG06G04-../D04LA4**	8.4	1070	-
0.03	0.6	45*	1.0	2435	**BG06G04-../D04LA4**	8.4	1070	-
0.03	20.5	13.9	3.2	66.79	**BG06-../D04LA4**	6.1	1070	-
0.03	7.4	38.5	3.1	184.0	**BG10Z-../D04LA4**	11	2000	2800
0.03	7.0	40.5	3.0	194.6	**BG10Z-../D04LA4**	11	2000	2800
0.03	6.3	45	2.7	215.7	**BG10Z-../D04LA4**	11	2000	2800

The torques marked (*) are maximum permissible torques for service factor f_B=1.0.

0.03 kW

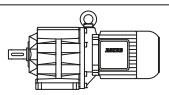

P_N	50 Hz			i	Type	m	F_{RN}	F_{RV}
	n_2	M_2	f_B					
[kW]	[1/min]	[Nm]	[—]	[:1]		[kg]	[N]	[N]
0.03	5.7	50	2.4	240.4	**BG10Z-../D04LA4**	11	2000	2800
0.03	5.1	56	2.1	266.3	**BG10Z-../D04LA4**	11	2000	2800
0.03	4.9	58	2.1	276.0	**BG10Z-../D04LA4**	11	2000	2800
0.03	4.5	63	1.9	305.8	**BG10Z-../D04LA4**	11	2000	2800
0.03	3.6	49	2.7	379.6	**BG10G06-../D04LA4**	14	2000	2800
0.03	3.1	57	2.3	435.9	**BG10G06-../D04LA4**	14	2000	2800
0.03	2.7	68	1.9	512.6	**BG10G06-../D04LA4**	14	2000	2800
0.03	2.3	83	1.55	613.6	**BG10G06-../D04LA4**	14	2000	2800
0.03	1.9	105	1.25	748.9	**BG10G06-../D04LA4**	14	2000	2800
0.03	1.6	130	1.0	899.5	**BG10G06-../D04LA4**	14	2000	2800
0.03	1.3	130*	1.0	1081	**BG10G06-../D04LA4**	14	2000	2800
0.03	1.1	130*	1.0	1272	**BG10G06-../D04LA4**	14	2000	2800
0.03	0.9	130*	1.0	1523	**BG10G06-../D04LA4**	14	2000	2800
0.03	0.75	130*	1.0	1863	**BG10G06-../D04LA4**	14	2000	2800
0.03	0.6	130*	1.0	2356	**BG10G06-../D04LA4**	14	2000	2800
0.03	0.55	130*	1.0	2699	**BG10G06-../D04LA4**	14	2000	2800
0.03	0.46	130*	1.0	2944	**BG10G06-../D04LA4**	14	2000	2800
0.03	0.4	130*	1.0	3378	**BG10G06-../D04LA4**	14	2000	2800
0.03	0.37	130*	1.0	3684	**BG10G06-../D04LA4**	14	2000	2800
0.03	0.31	130*	1.0	4477	**BG10G06-../D04LA4**	14	2000	2800
0.03	0.28	130*	1.0	4884	**BG10G06-../D04LA4**	14	2000	2800
0.03	2.5	77	2.9	550.6	**BG20G06-../D04LA4**	17	5000	2100
0.03	2.1	95	2.3	671.9	**BG20G06-../D04LA4**	17	5000	2100
0.03	1.7	125	1.75	807.1	**BG20G06-../D04LA4**	17	5000	2100
0.03	1.4	160	1.4	969.9	**BG20G06-../D04LA4**	17	5000	2100
0.03	1.2	188	1.15	1142	**BG20G06-../D04LA4**	17	5000	2100
0.03	1.0	230	0.96	1366	**BG20G06-../D04LA4**	17	5000	2100
0.03	0.85	220*	1.0	1672	**BG20G06-../D04LA4**	17	5000	2100
0.03	0.75	220*	1.0	1824	**BG20G06-../D04LA4**	17	5000	2100
0.03	0.65	220*	1.0	2114	**BG20G06-../D04LA4**	17	5000	2100
0.03	0.6	220*	1.0	2422	**BG20G06-../D04LA4**	17	5000	2100
0.03	0.55	220*	1.0	2642	**BG20G06-../D04LA4**	17	5000	2100
0.03	0.45	220*	1.0	3031	**BG20G06-../D04LA4**	17	5000	2100
0.03	0.41	220*	1.0	3306	**BG20G06-../D04LA4**	17	5000	2100
0.03	0.34	220*	1.0	4017	**BG20G06-../D04LA4**	17	5000	2100
0.03	0.31	220*	1.0	4383	**BG20G06-../D04LA4**	17	5000	2100
0.03	2.0	101	3.2	690.6	**BG30G06-../D04LA4**	21	6000	-
0.03	1.8	116	2.8	760.7	**BG30G06-../D04LA4**	21	6000	-
0.03	1.7	124	2.6	829.5	**BG30G06-../D04LA4**	21	6000	-
0.03	1.4	158	2.1	996.8	**BG30G06-../D04LA4**	21	6000	-
0.03	1.3	173	1.9	1088	**BG30G06-../D04LA4**	21	6000	-
0.03	1.1	205	1.6	1280	**BG30G06-../D04LA4**	21	6000	-
0.03	1.0	230	1.4	1404	**BG30G06-../D04LA4**	21	6000	-
0.03	0.8	295	1.1	1718	**BG30G06-../D04LA4**	21	6000	-
0.03	0.75	320	1.0	1875	**BG30G06-../D04LA4**	21	6000	-
0.03	0.65	325*	1.0	2173	**BG30G06-../D04LA4**	21	6000	-
0.03	0.5	325*	1.0	2715	**BG30G06-../D04LA4**	21	6000	-
0.03	0.44	325*	1.0	3115	**BG30G06-../D04LA4**	21	6000	-
0.03	0.4	325*	1.0	3398	**BG30G06-../D04LA4**	21	6000	-
0.03	0.35	325*	1.0	3867	**BG30G06-../D04LA4**	21	6000	-
0.03	0.3	325*	1.0	4504	**BG30G06-../D04LA4**	21	6000	-

0.04 kW

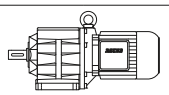

P_N	50 Hz			i	Type	m	F_{RN}	F_{RV}
	n_2	M_2	f_B					
[kW]	[1/min]	[Nm]	[—]	[:1]		[kg]	[N]	[N]
0.04	540	0.7	5.7	2.51	**BG04-../D04LA4**	4.4	340	-
0.04	370	1.03	4.9	3.65	**BG04-../D04LA4**	4.4	390	-
0.04	310	1.23	5.7	4.39	**BG04-../D04LA4**	4.4	380	-
0.04	255	1.49	6.0	5.36	**BG04-../D04LA4**	4.4	380	-
0.04	220	1.73	6.4	6.18	**BG04-../D04LA4**	4.4	415	-
0.04	205	1.86	5.4	6.67	**BG04-../D04LA4**	4.4	410	-
0.04	199	1.91	5.8	6.80	**BG04-../D04LA4**	4.4	420	-
0.04	158	2.4	4.6	8.58	**BG04-../D04LA4**	4.4	410	-

The torques marked (*) are maximum permissible torques for service factor f_B=1.0.

0.04 kW

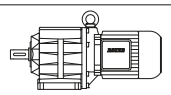

P_N	50 Hz			i	Type	m	F_{RN}	F_{RV}
	n_2	M_2	f_B					
[kW]	[1/min]	[Nm]	[—]	[:1]		[kg]	[N]	[N]
0.04	150	2.5	4.8	9.00	**BG04-../D04LA4**	4.4	470	-
0.04	137	2.75	4.7	9.90	**BG04-../D04LA4**	4.4	480	-
0.04	125	3.05	4.6	10.82	**BG04-../D04LA4**	4.4	480	-
0.04	114	3.35	4.5	11.90	**BG04-../D04LA4**	4.4	490	-
0.04	108	3.5	4.3	12.55	**BG04-../D04LA4**	4.4	490	-
0.04	103	3.7	4.3	13.20	**BG04-../D04LA4**	4.4	500	-
0.04	93	4.1	4.1	14.52	**BG04-../D04LA4**	4.4	510	-
0.04	83	4.6	3.9	16.44	**BG04-../D04LA4**	4.4	530	-
0.04	75	5.0	3.6	18.08	**BG04-../D04LA4**	4.4	540	-
0.04	64	5.9	3.2	21.12	**BG04-../D04LA4**	4.4	560	-
0.04	59	6.4	3.1	23.23	**BG04-../D04LA4**	4.4	600	-
0.04	56	6.8	2.9	24.45	**BG04-../D04LA4**	4.4	610	-
0.04	51	7.4	2.7	26.89	**BG04-../D04LA4**	4.4	650	-
0.04	44	8.6	2.3	30.91	**BG04-../D04LA4**	4.4	690	-
0.04	40	9.5	2.1	34.00	**BG04-../D04LA4**	4.4	720	-
0.04	38.5	9.9	2.0	35.35	**BG04-../D04LA4**	4.4	730	-
0.04	35	10.9	1.85	38.89	**BG04-../D04LA4**	4.4	750	-
0.04	32	11.9	1.7	42.24	**BG04-../D04LA4**	4.4	750	-
0.04	29.5	12.9	1.55	46.47	**BG04-../D04LA4**	4.4	750	-
0.04	28.5	13.4	1.5	47.52	**BG04-../D04LA4**	4.4	750	-
0.04	26	14.6	1.35	52.28	**BG04-../D04LA4**	4.4	750	-
0.04	25	15.2	1.3	54.97	**BG04-../D04LA4**	4.4	750	-
0.04	22.5	16.9	1.2	60.47	**BG04-../D04LA4**	4.4	750	-
0.04	39	9.7	3.1	35.00	**BG05-../D04LA4**	5.1	810	-
0.04	35.5	10.7	2.8	38.18	**BG05-../D04LA4**	5.1	850	-
0.04	34	11.2	2.7	39.94	**BG05-../D04LA4**	5.1	860	-
0.04	31	12.3	2.4	43.57	**BG05-../D04LA4**	5.1	900	-
0.04	29	13.1	2.3	47.00	**BG05-../D04LA4**	5.1	930	-
0.04	26.5	14.4	2.1	51.27	**BG05-../D04LA4**	5.1	970	-
0.04	25.5	14.9	2.0	53.44	**BG05-../D04LA4**	5.1	980	-
0.04	23.5	16.2	1.85	58.30	**BG05-../D04LA4**	5.1	1000	-
0.04	18	19.1	2.1	75.99	**BG06G04-../D04LA4**	8.4	1070	-
0.04	16.5	20.5	2.1	82.89	**BG06G04-../D04LA4**	8.4	1070	-
0.04	15	22.5	2.0	93.00	**BG06G04-../D04LA4**	8.4	1070	-
0.04	13.5	25.5	1.75	101.5	**BG06G04-../D04LA4**	8.4	1070	-
0.04	11.5	29	1.55	122.0	**BG06G04-../D04LA4**	8.4	1070	-
0.04	9.1	36.5	1.25	149.0	**BG06G04-../D04LA4**	8.4	1070	-
0.04	7.3	46.5	0.97	185.4	**BG06G04-../D04LA4**	8.4	1070	-
0.04	27	14.1	3.2	50.38	**BG06-../D04LA4**	6.1	940	-
0.04	26	14.6	3.1	52.56	**BG06-../D04LA4**	6.1	950	-
0.04	24	15.9	2.8	57.34	**BG06-../D04LA4**	6.1	1000	-
0.04	22.5	16.9	2.7	61.22	**BG06-../D04LA4**	6.1	1020	-
0.04	20.5	18.6	2.4	66.79	**BG06-../D04LA4**	6.1	1070	-
0.04	10.5	36	3.3	131.8	**BG10Z-../D04LA4**	11	2000	2800
0.04	9.3	41	2.9	146.0	**BG10Z-../D04LA4**	11	2000	2800
0.04	8.2	46.5	2.6	166.0	**BG10Z-../D04LA4**	11	2000	2800
0.04	7.4	51	2.4	184.0	**BG10Z-../D04LA4**	11	2000	2800
0.04	7.0	54	2.2	194.6	**BG10Z-../D04LA4**	11	2000	2800
0.04	6.3	60	2.0	215.7	**BG10Z-../D04LA4**	11	2000	2800
0.04	5.7	67	1.8	240.4	**BG10Z-../D04LA4**	11	2000	2800
0.04	5.1	74	1.6	266.3	**BG10Z-../D04LA4**	11	2000	2800
0.04	4.9	77	1.55	276.0	**BG10Z-../D04LA4**	11	2000	2800
0.04	4.5	84	1.45	305.8	**BG10Z-../D04LA4**	11	2000	2800
0.04	4.1	60	2.2	332.0	**BG10G06-../D04LA4**	14	2000	2800
0.04	3.6	75	1.75	379.6	**BG10G06-../D04LA4**	14	2000	2800
0.04	3.1	88	1.5	435.9	**BG10G06-../D04LA4**	14	2000	2800
0.04	2.7	103	1.25	512.6	**BG10G06-../D04LA4**	14	2000	2800
0.04	2.3	125	1.05	613.6	**BG10G06-../D04LA4**	14	2000	2800
0.04	1.9	155	0.84	748.9	**BG10G06-../D04LA4**	14	2000	2800
0.04	6.1	62	3.2	222.1	**BG20Z-../D04LA4**	13	5000	-
0.04	3.9	69	3.2	352.1	**BG20G06-../D04LA4**	17	5000	2100
0.04	3.5	77	2.9	391.1	**BG20G06-../D04LA4**	17	5000	2100
0.04	3.0	93	2.4	460.0	**BG20G06-../D04LA4**	17	5000	2100
0.04	2.5	116	1.9	550.6	**BG20G06-../D04LA4**	17	5000	2100
0.04	2.1	141	1.55	671.9	**BG20G06-../D04LA4**	17	5000	2100

The torques marked (*) are maximum permissible torques for service factor f_B=1.0.

0.04 kW

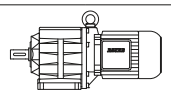

P_N	50 Hz			i	Type	m	F_{RN}	F_{RV}
	n_2	M_2	f_B					
[kW]	[1/min]	[Nm]	[—]	[:1]		[kg]	[N]	[N]
0.04	1.7	181	1.2	807.1	**BG20G06-../D04LA4**	17	5000	2100
0.04	1.4	225	0.98	969.9	**BG20G06-../D04LA4**	17	5000	2100
0.04	1.2	265	0.83	1142	**BG20G06-../D04LA4**	17	5000	2100
0.04	2.4	121	2.7	565.8	**BG30G06-../D04LA4**	21	6000	-
0.04	2.0	149	2.2	690.6	**BG30G06-../D04LA4**	21	6000	-
0.04	1.8	169	1.9	760.7	**BG30G06-../D04LA4**	21	6000	-
0.04	1.7	180	1.8	829.5	**BG30G06-../D04LA4**	21	6000	-
0.04	1.4	225	1.45	996.8	**BG30G06-../D04LA4**	21	6000	-
0.04	1.3	245	1.35	1088	**BG30G06-../D04LA4**	21	6000	-
0.04	1.1	290	1.1	1280	**BG30G06-../D04LA4**	21	6000	-
0.04	1.0	325	1.0	1404	**BG30G06-../D04LA4**	21	6000	-

0.06 kW

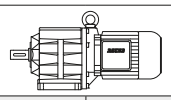

P_N	50 Hz			i	Type	m	F_{RN}	F_{RV}
	n_2	M_2	f_B					
[kW]	[1/min]	[Nm]	[—]	[:1]		[kg]	[N]	[N]
0.06	540	1.06	3.8	2.51	**BG04-../D04LA4**	4.4	340	-
0.06	370	1.54	3.2	3.65	**BG04-../D04LA4**	4.4	390	-
0.06	310	1.84	3.8	4.39	**BG04-../D04LA4**	4.4	380	-
0.06	255	2.2	4.1	5.36	**BG04-../D04LA4**	4.4	380	-
0.06	220	2.6	4.2	6.18	**BG04-../D04LA4**	4.4	415	-
0.06	205	2.75	3.6	6.67	**BG04-../D04LA4**	4.4	410	-
0.06	199	2.85	3.9	6.80	**BG04-../D04LA4**	4.4	420	-
0.06	158	3.6	3.1	8.58	**BG04-../D04LA4**	4.4	410	-
0.06	150	3.8	3.2	9.00	**BG04-../D04LA4**	4.4	470	-
0.06	137	4.15	3.1	9.90	**BG04-../D04LA4**	4.4	480	-
0.06	125	4.55	3.1	10.82	**BG04-../D04LA4**	4.4	480	-
0.06	114	5.0	3.0	11.90	**BG04-../D04LA4**	4.4	490	-
0.06	108	5.3	2.8	12.55	**BG04-../D04LA4**	4.4	490	-
0.06	103	5.5	2.9	13.20	**BG04-../D04LA4**	4.4	500	-
0.06	93	6.1	2.8	14.52	**BG04-../D04LA4**	4.4	510	-
0.06	83	6.9	2.6	16.44	**BG04-../D04LA4**	4.4	530	-
0.06	75	7.6	2.4	18.08	**BG04-../D04LA4**	4.4	540	-
0.06	64	8.9	2.1	21.12	**BG04-../D04LA4**	4.4	560	-
0.06	59	9.7	2.1	23.23	**BG04-../D04LA4**	4.4	600	-
0.06	56	10.2	1.95	24.45	**BG04-../D04LA4**	4.4	610	-
0.06	51	11.2	1.8	26.89	**BG04-../D04LA4**	4.4	650	-
0.06	44	13	1.55	30.91	**BG04-../D04LA4**	4.4	690	-
0.06	40	14.3	1.4	34.00	**BG04-../D04LA4**	4.4	720	-
0.06	38.5	14.8	1.35	35.35	**BG04-../D04LA4**	4.4	730	-
0.06	35	16.3	1.25	38.89	**BG04-../D04LA4**	4.4	750	-
0.06	32	17.9	1.1	42.24	**BG04-../D04LA4**	4.4	750	-
0.06	29.5	19.4	1.05	46.47	**BG04-../D04LA4**	4.4	750	-
0.06	28.5	20	1.0	47.52	**BG04-../D04LA4**	4.4	750	-
0.06	26	22	0.91	52.28	**BG04-../D04LA4**	4.4	750	-
0.06	25	22.5	0.89	54.97	**BG04-../D04LA4**	4.4	750	-
0.06	22.5	25	0.8	60.47	**BG04-../D04LA4**	4.4	750	-
0.06	72	7.9	3.3	18.82	**BG05-../D04LA4**	5.1	680	-
0.06	66	8.6	3.1	20.53	**BG05-../D04LA4**	5.1	700	-
0.06	57	10	2.8	24.00	**BG05-../D04LA4**	5.1	740	-
0.06	52	11	2.6	26.18	**BG05-../D04LA4**	5.1	760	-
0.06	49	11.6	2.6	27.82	**BG05-../D04LA4**	5.1	770	-
0.06	44.5	12.8	2.3	30.35	**BG05-../D04LA4**	5.1	760	-
0.06	39	14.6	2.1	35.00	**BG05-../D04LA4**	5.1	810	-
0.06	35.5	16.1	1.85	38.18	**BG05-../D04LA4**	5.1	850	-
0.06	34	16.8	1.8	39.94	**BG05-../D04LA4**	5.1	860	-
0.06	31	18.4	1.65	43.57	**BG05-../D04LA4**	5.1	900	-
0.06	29	19.7	1.5	47.00	**BG05-../D04LA4**	5.1	930	-
0.06	26.5	21.5	1.4	51.27	**BG05-../D04LA4**	5.1	970	-
0.06	25.5	22	1.35	53.44	**BG05-../D04LA4**	5.1	980	-
0.06	23.5	24	1.25	58.30	**BG05-../D04LA4**	5.1	1000	-
0.06	18	29.5	1.35	75.99	**BG06G04-../D04LA4**	8.4	1070	-
0.06	16.5	32	1.35	82.89	**BG06G04-../D04LA4**	8.4	1070	-

The torques marked (*) are maximum permissible torques for service factor f_B=1.0.

0.06 kW

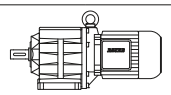

P_N	50 Hz			i	Type	m	F_{RN}	F_{RV}
	n_2	M_2	f_B					
[kW]	[1/min]	[Nm]	[—]	[:1]		[kg]	[N]	[N]
0.06	15	35.5	1.25	93.00	**BG06G04-../D04LA4**	8.4	1070	-
0.06	13.5	39.5	1.15	101.5	**BG06G04-../D04LA4**	8.4	1070	-
0.06	11.5	45.5	0.99	122.0	**BG06G04-../D04LA4**	8.4	1070	-
0.06	42	13.6	3.3	32.22	**BG06-../D04LA4**	6.1	890	-
0.06	38.5	14.8	3.0	35.15	**BG06-../D04LA4**	6.1	880	-
0.06	37	15.4	2.9	36.91	**BG06-../D04LA4**	6.1	890	-
0.06	34	16.8	2.7	40.26	**BG06-../D04LA4**	6.1	890	-
0.06	29.5	19.4	2.3	46.19	**BG06-../D04LA4**	6.1	890	-
0.06	27	21	2.1	50.38	**BG06-../D04LA4**	6.1	940	-
0.06	26	22	2.0	52.56	**BG06-../D04LA4**	6.1	950	-
0.06	24	23.5	1.9	57.34	**BG06-../D04LA4**	6.1	1000	-
0.06	22.5	25	1.8	61.22	**BG06-../D04LA4**	6.1	1020	-
0.06	20.5	27.5	1.65	66.79	**BG06-../D04LA4**	6.1	1070	-
0.06	15	38	3.2	92.19	**BG10Z-../D06LA4**	14	2000	2800
0.06	13.5	42	2.9	102.1	**BG10Z-../D06LA4**	14	2000	2800
0.06	12.5	45.5	2.6	109.8	**BG10Z-../D06LA4**	14	2000	2800
0.06	11.5	49.5	2.4	121.7	**BG10Z-../D06LA4**	14	2000	2800
0.06	10.5	54	2.2	131.8	**BG10Z-../D06LA4**	14	2000	2800
0.06	9.3	61	1.95	146.0	**BG10Z-../D06LA4**	14	2000	2800
0.06	8.2	69	1.75	166.0	**BG10Z-../D06LA4**	14	2000	2800
0.06	7.4	77	1.55	184.0	**BG10Z-../D06LA4**	14	2000	2800
0.06	7.0	81	1.5	194.6	**BG10Z-../D06LA4**	14	2000	2800
0.06	6.3	90	1.35	215.7	**BG10Z-../D06LA4**	14	2000	2800
0.06	5.7	100	1.2	240.4	**BG10Z-../D06LA4**	14	2000	2800
0.06	5.1	112	1.05	266.3	**BG10Z-../D06LA4**	14	2000	2800
0.06	4.9	116	1.05	276.0	**BG10Z-../D06LA4**	14	2000	2800
0.06	4.5	127	0.94	305.8	**BG10Z-../D06LA4**	14	2000	2800
0.06	4.1	107	1.2	332.0	**BG10G06-../D06LA4**	18	2000	2800
0.06	3.6	128	1.0	379.6	**BG10G06-../D06LA4**	18	2000	2800
0.06	3.1	149	0.87	435.9	**BG10G06-../D06LA4**	18	2000	2800
0.06	8.4	68	2.9	162.2	**BG20Z-../D06LA4**	16	5000	-
0.06	7.5	76	2.6	180.1	**BG20Z-../D06LA4**	16	5000	-
0.06	6.8	84	2.4	199.9	**BG20Z-../D06LA4**	16	5000	-
0.06	6.1	93	2.2	222.1	**BG20Z-../D06LA4**	16	5000	-
0.06	5.5	77	2.9	248.0	**BG20G06-../D06LA4**	20	5000	2100
0.06	4.6	95	2.3	297.9	**BG20G06-../D06LA4**	20	5000	2100
0.06	3.9	118	1.85	352.1	**BG20G06-../D06LA4**	20	5000	2100
0.06	3.5	132	1.65	391.1	**BG20G06-../D06LA4**	20	5000	2100
0.06	3.0	156	1.4	460.0	**BG20G06-../D06LA4**	20	5000	2100
0.06	2.5	192	1.15	550.6	**BG20G06-../D06LA4**	20	5000	2100
0.06	2.1	230	0.96	671.9	**BG20G06-../D06LA4**	20	5000	2100
0.06	6.0	95	3.2	225.9	**BG30Z-../D06LA4**	22	6000	-
0.06	5.2	110	2.7	261.9	**BG30Z-../D06LA4**	22	6000	-
0.06	4.7	121	2.5	290.5	**BG30Z-../D06LA4**	22	6000	-
0.06	3.9	118	2.8	346.8	**BG30G06-../D06LA4**	25	6000	-
0.06	3.4	136	2.4	401.9	**BG30G06-../D06LA4**	25	6000	-
0.06	2.9	162	2.0	472.8	**BG30G06-../D06LA4**	25	6000	-
0.06	2.4	200	1.65	565.8	**BG30G06-../D06LA4**	25	6000	-
0.06	2.0	240	1.35	690.6	**BG30G06-../D06LA4**	25	6000	-
0.06	1.8	275	1.2	760.7	**BG30G06-../D06LA4**	25	6000	-
0.06	1.7	290	1.1	829.5	**BG30G06-../D06LA4**	25	6000	-
0.06	1.4	360	0.9	996.8	**BG30G06-../D06LA4**	25	6000	-
0.06	1.3	390	0.83	1088	**BG30G06-../D06LA4**	25	6000	-
0.06	2.2	147	3.2	640.0	**BG40G10-../D06LA4**	43	7000	-
0.06	1.9	176	2.6	710.9	**BG40G10-../D06LA4**	43	7000	-
0.06	1.8	179	2.6	789.1	**BG40G10-../D06LA4**	43	7000	-
0.06	1.4	255	1.8	965.2	**BG40G10-../D06LA4**	43	7000	-
0.06	1.2	315	1.5	1225	**BG40G10-../D06LA4**	43	7000	-
0.06	0.95	440	1.05	1459	**BG40G10-../D06LA4**	43	7000	-
0.06	1.5	230	3.0	960.2	**BG50G10-../D06LA4**	51	10000	-
0.06	1.2	315	2.2	1219	**BG50G10-../D06LA4**	51	10000	-
0.06	0.95	445	1.55	1452	**BG50G10-../D06LA4**	51	10000	-
0.06	0.8	550	1.25	1729	**BG50G10-../D06LA4**	51	10000	-
0.06	0.7	660	1.05	2076	**BG50G10-../D06LA4**	51	10000	-

The torques marked (*) are maximum permissible torques for service factor f_B=1.0.

0.06 kW

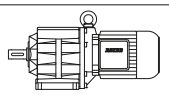

P_N	50 Hz			i	Type	m	F_{RN}	F_{RV}
	n_2	M_2	f_B					
[kW]	[1/min]	[Nm]	[—]	[:1]		[kg]	[N]	[N]
0.06	0.8	445	2.9	1741	**BG60G20-../D06LA4**	100	16000	-
0.06	0.75	490	2.7	1880	**BG60G20-../D06LA4**	100	16000	-
0.06	0.65	610	2.1	2249	**BG60G20-../D06LA4**	100	16000	-
0.06	0.48	920	1.4	2818	**BG60G20-../D06LA4**	100	16000	-
0.06	0.42	1090	1.2	3234	**BG60G20-../D06LA4**	100	16000	-
0.06	0.38	1230	1.05	3592	**BG60G20-../D06LA4**	100	16000	-
0.06	0.49	930	2.7	2774	**BG70G20-../D06LA4**	130	20000	-
0.06	0.43	1090	2.3	3184	**BG70G20-../D06LA4**	130	20000	-
0.06	0.35	1390	1.8	3925	**BG70G20-../D06LA4**	130	20000	-

0.09 kW

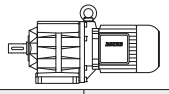

P_N	50 Hz			i	Type	m	F_{RN}	F_{RV}
	n_2	M_2	f_B					
[kW]	[1/min]	[Nm]	[—]	[:1]		[kg]	[N]	[N]
0.09	540	1.59	2.5	2.51	**BG04-../D04LA4**	4.4	340	-
0.09	370	2.3	2.2	3.65	**BG04-../D04LA4**	4.4	390	-
0.09	310	2.75	2.5	4.39	**BG04-../D04LA4**	4.4	380	-
0.09	255	3.35	2.7	5.36	**BG04-../D04LA4**	4.4	380	-
0.09	220	3.9	2.8	6.18	**BG04-../D04LA4**	4.4	415	-
0.09	205	4.15	2.4	6.67	**BG04-../D04LA4**	4.4	410	-
0.09	199	4.3	2.6	6.80	**BG04-../D04LA4**	4.4	420	-
0.09	158	5.4	2.0	8.58	**BG04-../D04LA4**	4.4	410	-
0.09	150	5.7	2.1	9.00	**BG04-../D04LA4**	4.4	470	-
0.09	137	6.2	2.1	9.90	**BG04-../D04LA4**	4.4	480	-
0.09	125	6.8	2.1	10.82	**BG04-../D04LA4**	4.4	480	-
0.09	114	7.5	2.0	11.90	**BG04-../D04LA4**	4.4	490	-
0.09	108	7.9	1.9	12.55	**BG04-../D04LA4**	4.4	490	-
0.09	103	8.3	1.95	13.20	**BG04-../D04LA4**	4.4	500	-
0.09	93	9.2	1.85	14.52	**BG04-../D04LA4**	4.4	510	-
0.09	83	10.3	1.75	16.44	**BG04-../D04LA4**	4.4	530	-
0.09	75	11.4	1.6	18.08	**BG04-../D04LA4**	4.4	540	-
0.09	64	13.4	1.4	21.12	**BG04-../D04LA4**	4.4	560	-
0.09	59	14.5	1.4	23.23	**BG04-../D04LA4**	4.4	600	-
0.09	56	15.3	1.3	24.45	**BG04-../D04LA4**	4.4	610	-
0.09	51	16.8	1.2	26.89	**BG04-../D04LA4**	4.4	650	-
0.09	44	19.5	1.05	30.91	**BG04-../D04LA4**	4.4	690	-
0.09	40	21	0.95	34.00	**BG04-../D04LA4**	4.4	720	-
0.09	38.5	22	0.91	35.35	**BG04-../D04LA4**	4.4	730	-
0.09	35	24.5	0.82	38.89	**BG04-../D04LA4**	4.4	750	-
0.09	128	6.7	3.0	10.59	**BG05-../D04LA4**	5.1	590	-
0.09	117	7.3	2.9	11.55	**BG05-../D04LA4**	5.1	600	-
0.09	113	7.6	2.8	12.05	**BG05-../D04LA4**	5.1	510	-
0.09	108	7.9	2.8	12.60	**BG05-../D04LA4**	5.1	610	-
0.09	99	8.6	2.7	13.75	**BG05-../D04LA4**	5.1	630	-
0.09	89	9.6	2.5	15.23	**BG05-../D04LA4**	5.1	640	-
0.09	82	10.4	2.4	16.62	**BG05-../D04LA4**	5.1	660	-
0.09	72	11.9	2.2	18.82	**BG05-../D04LA4**	5.1	680	-
0.09	66	13	2.1	20.53	**BG05-../D04LA4**	5.1	700	-
0.09	57	15	1.85	24.00	**BG05-../D04LA4**	5.1	740	-
0.09	52	16.5	1.75	26.18	**BG05-../D04LA4**	5.1	760	-
0.09	49	17.5	1.7	27.82	**BG05-../D04LA4**	5.1	770	-
0.09	44.5	19.3	1.55	30.35	**BG05-../D04LA4**	5.1	760	-
0.09	39	22	1.35	35.00	**BG05-../D04LA4**	5.1	810	-
0.09	35.5	24	1.25	38.18	**BG05-../D04LA4**	5.1	850	-
0.09	34	25	1.2	39.94	**BG05-../D04LA4**	5.1	860	-
0.09	31	27.5	1.1	43.57	**BG05-../D04LA4**	5.1	900	-
0.09	29	29.5	1.0	47.00	**BG05-../D04LA4**	5.1	930	-
0.09	26.5	32	0.94	51.27	**BG05-../D04LA4**	5.1	970	-
0.09	25.5	33.5	0.9	53.44	**BG05-../D04LA4**	5.1	980	-
0.09	23.5	36.5	0.82	58.30	**BG05-../D04LA4**	5.1	1000	-
0.09	18	45.5	0.88	75.99	**BG06G04-../D04LA4**	8.4	1070	-
0.09	16.5	49.5	0.87	82.89	**BG06G04-../D04LA4**	8.4	1070	-
0.09	15	54	0.83	93.00	**BG06G04-../D04LA4**	8.4	1070	-

The torques marked (*) are maximum permissible torques for service factor f_B=1.0.

0.09 kW

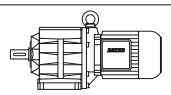

P_N	50 Hz			i	Type	m	F_{RN}	F_{RV}
	n_2	M_2	f_B					
[kW]	[1/min]	[Nm]	[—]	[:1]		[kg]	[N]	[N]
0.09	65	13.2	3.0	20.82	**BG06-../D04LA4**	6.1	800	-
0.09	60	14.3	3.0	22.71	**BG06-../D04LA4**	6.1	810	-
0.09	53	16.2	2.8	25.48	**BG06-../D04LA4**	6.1	850	-
0.09	49	17.5	2.6	27.80	**BG06-../D04LA4**	6.1	840	-
0.09	42	20	2.3	32.22	**BG06-../D04LA4**	6.1	890	-
0.09	38.5	22	2.0	35.15	**BG06-../D04LA4**	6.1	880	-
0.09	37	23	1.95	36.91	**BG06-../D04LA4**	6.1	890	-
0.09	34	25	1.8	40.26	**BG06-../D04LA4**	6.1	890	-
0.09	29.5	29	1.55	46.19	**BG06-../D04LA4**	6.1	890	-
0.09	27	31.5	1.45	50.38	**BG06-../D04LA4**	6.1	940	-
0.09	26	33	1.35	52.56	**BG06-../D04LA4**	6.1	950	-
0.09	24	35.5	1.25	57.34	**BG06-../D04LA4**	6.1	1000	-
0.09	22.5	38	1.2	61.22	**BG06-../D04LA4**	6.1	1020	-
0.09	20.5	41.5	1.1	66.79	**BG06-../D04LA4**	6.1	1070	-
0.09	23.5	36.5	3.3	57.48	**BG10-../D06LA4**	13	2000	2800
0.09	21.5	39.5	3.0	63.69	**BG10-../D06LA4**	13	2000	2800
0.09	20.5	41.5	2.9	66.00	**BG10-../D06LA4**	13	2000	2800
0.09	18.5	46	2.6	73.13	**BG10-../D06LA4**	13	2000	2800
0.09	17.5	49	2.4	77.40	**BG10Z-../D06LA4**	14	2000	2800
0.09	16	53	2.3	85.76	**BG10Z-../D06LA4**	14	2000	2800
0.09	15	57	2.1	92.19	**BG10Z-../D06LA4**	14	2000	2800
0.09	13.5	63	1.9	102.1	**BG10Z-../D06LA4**	14	2000	2800
0.09	12.5	68	1.75	109.8	**BG10Z-../D06LA4**	14	2000	2800
0.09	11.5	74	1.6	121.7	**BG10Z-../D06LA4**	14	2000	2800
0.09	10.5	81	1.5	131.8	**BG10Z-../D06LA4**	14	2000	2800
0.09	9.3	92	1.3	146.0	**BG10Z-../D06LA4**	14	2000	2800
0.09	8.2	104	1.15	166.0	**BG10Z-../D06LA4**	14	2000	2800
0.09	7.4	116	1.05	184.0	**BG10Z-../D06LA4**	14	2000	2800
0.09	7.0	122	0.98	194.6	**BG10Z-../D06LA4**	14	2000	2800
0.09	6.3	136	0.88	215.7	**BG10Z-../D06LA4**	14	2000	2800
0.09	5.7	150	0.8	240.4	**BG10Z-../D06LA4**	14	2000	2800
0.09	4.9	146	0.89	276.4	**BG10G06-../D06LA4**	18	2000	2800
0.09	13	66	3.0	104.7	**BG20Z-../D06LA4**	16	5000	-
0.09	12	71	2.8	112.8	**BG20Z-../D06LA4**	16	5000	-
0.09	11	78	2.6	125.3	**BG20Z-../D06LA4**	16	5000	-
0.09	9.6	89	2.2	141.3	**BG20Z-../D06LA4**	16	5000	-
0.09	8.4	102	1.95	162.2	**BG20Z-../D06LA4**	16	5000	-
0.09	7.5	114	1.75	180.1	**BG20Z-../D06LA4**	16	5000	-
0.09	6.8	126	1.6	199.9	**BG20Z-../D06LA4**	16	5000	-
0.09	6.1	140	1.45	222.1	**BG20Z-../D06LA4**	16	5000	-
0.09	5.5	130	1.7	248.0	**BG20G06-../D06LA4**	20	5000	2100
0.09	4.6	157	1.4	297.9	**BG20G06-../D06LA4**	20	5000	2100
0.09	3.9	192	1.15	352.1	**BG20G06-../D06LA4**	20	5000	2100
0.09	3.5	210	1.05	391.1	**BG20G06-../D06LA4**	20	5000	2100
0.09	3.0	250	0.88	460.0	**BG20G06-../D06LA4**	20	5000	2100
0.09	9.5	90	3.3	142.5	**BG30Z-../D06LA4**	22	6000	-
0.09	9.0	95	3.2	151.5	**BG30Z-../D06LA4**	22	6000	-
0.09	8.1	106	2.8	168.1	**BG30Z-../D06LA4**	22	6000	-
0.09	7.4	116	2.6	182.9	**BG30Z-../D06LA4**	22	6000	-
0.09	6.7	128	2.3	202.9	**BG30Z-../D06LA4**	22	6000	-
0.09	6.0	143	2.1	225.9	**BG30Z-../D06LA4**	22	6000	-
0.09	5.2	165	1.8	261.9	**BG30Z-../D06LA4**	22	6000	-
0.09	4.7	182	1.65	290.5	**BG30Z-../D06LA4**	22	6000	-
0.09	4.5	161	2.0	306.2	**BG30G06-../D06LA4**	25	6000	-
0.09	3.9	192	1.7	346.8	**BG30G06-../D06LA4**	25	6000	-
0.09	3.4	220	1.5	401.9	**BG30G06-../D06LA4**	25	6000	-
0.09	2.9	260	1.25	472.8	**BG30G06-../D06LA4**	25	6000	-
0.09	2.4	320	1.0	565.8	**BG30G06-../D06LA4**	25	6000	-
0.09	2.0	385	0.84	690.6	**BG30G06-../D06LA4**	25	6000	-
0.09	6.1	140	3.0	221.9	**BG40Z-../D06LA4**	38	7000	-
0.09	5.5	156	2.7	246.5	**BG40Z-../D06LA4**	38	7000	-
0.09	5.0	171	2.5	273.6	**BG40Z-../D06LA4**	38	7000	-
0.09	3.1	170	2.7	448.8	**BG40G10-../D06LA4**	43	7000	-
0.09	2.6	210	2.2	534.2	**BG40G10-../D06LA4**	43	7000	-
0.09	2.2	275	1.7	640.0	**BG40G10-../D06LA4**	43	7000	-
0.09	1.9	325	1.45	710.9	**BG40G10-../D06LA4**	43	7000	-

The torques marked (*) are maximum permissible torques for service factor f_B=1.0.

0.09 kW

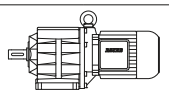

P_N	50 Hz			i	Type	m	F_{RN}	F_{RV}
	n_2	M_2	f_B					
[kW]	[1/min]	[Nm]	[—]	[:1]		[kg]	[N]	[N]
0.09	1.8	335	1.4	789.1	**BG40G10-../D06LA4**	43	7000	-
0.09	1.4	460	1.0	965.2	**BG40G10-../D06LA4**	43	7000	-
0.09	1.2	550	0.85	1225	**BG40G10-../D06LA4**	43	7000	-
0.09	2.6	210	3.3	531.5	**BG50G10-../D06LA4**	51	10000	-
0.09	2.2	280	2.5	621.3	**BG50G10-../D06LA4**	51	10000	-
0.09	2.0	300	2.3	708.3	**BG50G10-../D06LA4**	51	10000	-
0.09	1.8	335	2.1	785.1	**BG50G10-../D06LA4**	51	10000	-
0.09	1.5	420	1.65	960.2	**BG50G10-../D06LA4**	51	10000	-
0.09	1.2	550	1.25	1219	**BG50G10-../D06LA4**	51	10000	-
0.09	1.3	420	3.1	1051	**BG60G20-../D06LA4**	100	16000	-
0.09	1.2	465	2.8	1168	**BG60G20-../D06LA4**	100	16000	-
0.09	1.1	510	2.5	1346	**BG60G20-../D06LA4**	100	16000	-
0.09	0.95	630	2.1	1496	**BG60G20-../D06LA4**	100	16000	-
0.09	0.8	800	1.65	1741	**BG60G20-../D06LA4**	100	16000	-
0.09	0.75	870	1.5	1880	**BG60G20-../D06LA4**	100	16000	-
0.09	0.65	1050	1.25	2249	**BG60G20-../D06LA4**	100	16000	-
0.09	0.85	770	3.2	1666	**BG70G20-../D06LA4**	130	20000	-
0.09	0.7	980	2.6	1994	**BG70G20-../D06LA4**	130	20000	-
0.09	0.65	1080	2.3	2215	**BG70G20-../D06LA4**	130	20000	-
0.09	0.49	1510	1.65	2774	**BG70G20-../D06LA4**	130	20000	-
0.09	0.43	1750	1.45	3184	**BG70G20-../D06LA4**	130	20000	-
0.09	0.35	2200	1.15	3925	**BG70G20-../D06LA4**	130	20000	-

0.11 kW

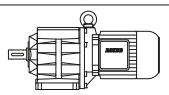

P_N	50 Hz			i	Type	m	F_{RN}	F_{RV}
	n_2	M_2	f_B					
[kW]	[1/min]	[Nm]	[—]	[:1]		[kg]	[N]	[N]
0.11	540	1.94	2.1	2.51	**BG04-../D04LA4**	4.4	340	-
0.11	370	2.8	1.8	3.65	**BG04-../D04LA4**	4.4	390	-
0.11	310	3.35	2.1	4.39	**BG04-../D04LA4**	4.4	380	-
0.11	255	4.1	2.2	5.36	**BG04-../D04LA4**	4.4	380	-
0.11	220	4.75	2.3	6.18	**BG04-../D04LA4**	4.4	415	-
0.11	205	5.1	1.95	6.67	**BG04-../D04LA4**	4.4	410	-
0.11	199	5.2	2.1	6.80	**BG04-../D04LA4**	4.4	420	-
0.11	158	6.6	1.65	8.58	**BG04-../D04LA4**	4.4	410	-
0.11	150	7.0	1.7	9.00	**BG04-../D04LA4**	4.4	470	-
0.11	137	7.6	1.7	9.90	**BG04-../D04LA4**	4.4	480	-
0.11	125	8.4	1.65	10.82	**BG04-../D04LA4**	4.4	480	-
0.11	114	9.2	1.65	11.90	**BG04-../D04LA4**	4.4	490	-
0.11	108	9.7	1.55	12.55	**BG04-../D04LA4**	4.4	490	-
0.11	103	10.1	1.6	13.20	**BG04-../D04LA4**	4.4	500	-
0.11	93	11.2	1.5	14.52	**BG04-../D04LA4**	4.4	510	-
0.11	83	12.6	1.45	16.44	**BG04-../D04LA4**	4.4	530	-
0.11	75	14	1.3	18.08	**BG04-../D04LA4**	4.4	540	-
0.11	64	16.4	1.15	21.12	**BG04-../D04LA4**	4.4	560	-
0.11	59	17.8	1.1	23.23	**BG04-../D04LA4**	4.4	600	-
0.11	56	18.7	1.05	24.45	**BG04-../D04LA4**	4.4	610	-
0.11	51	20.5	0.98	26.89	**BG04-../D04LA4**	4.4	650	-
0.11	44	23.5	0.85	30.91	**BG04-../D04LA4**	4.4	690	-
0.11	250	4.2	3.3	5.46	**BG05-../D04LA4**	5.1	490	-
0.11	205	5.1	3.3	6.64	**BG05-../D04LA4**	5.1	500	-
0.11	174	6.0	3.0	7.80	**BG05-../D04LA4**	5.1	530	-
0.11	166	6.3	2.9	8.15	**BG05-../D04LA4**	5.1	510	-
0.11	159	6.6	2.9	8.51	**BG05-../D04LA4**	5.1	550	-
0.11	128	8.2	2.4	10.59	**BG05-../D04LA4**	5.1	590	-
0.11	117	8.9	2.4	11.55	**BG05-../D04LA4**	5.1	600	-
0.11	113	9.2	2.3	12.05	**BG05-../D04LA4**	5.1	510	-
0.11	108	9.7	2.3	12.60	**BG05-../D04LA4**	5.1	610	-
0.11	99	10.6	2.2	13.75	**BG05-../D04LA4**	5.1	630	-
0.11	89	11.8	2.0	15.23	**BG05-../D04LA4**	5.1	640	-
0.11	82	12.8	1.95	16.62	**BG05-../D04LA4**	5.1	660	-
0.11	72	14.5	1.8	18.82	**BG05-../D04LA4**	5.1	680	-

The torques marked (*) are maximum permissible torques for service factor f_B=1.0.

0.11 kW

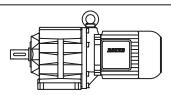

P_N	50 Hz			i	Type	m	F_{RN}	F_{RV}
	n_2	M_2	f_B					
[kW]	[1/min]	[Nm]	[—]	[:1]		[kg]	[N]	[N]
0.11	66	15.9	1.7	20.53	**BG05-../D04LA4**	5.1	700	-
0.11	57	18.4	1.5	24.00	**BG05-../D04LA4**	5.1	740	-
0.11	52	20	1.45	26.18	**BG05-../D04LA4**	5.1	760	-
0.11	49	21	1.45	27.82	**BG05-../D04LA4**	5.1	770	-
0.11	44.5	23.5	1.3	30.35	**BG05-../D04LA4**	5.1	760	-
0.11	39	26.5	1.15	35.00	**BG05-../D04LA4**	5.1	810	-
0.11	35.5	29.5	1.0	38.18	**BG05-../D04LA4**	5.1	850	-
0.11	34	30.5	0.98	39.94	**BG05-../D04LA4**	5.1	860	-
0.11	31	33.5	0.9	43.57	**BG05-../D04LA4**	5.1	900	-
0.11	29	36	0.83	47.00	**BG05-../D04LA4**	5.1	930	-
0.11	18	40*	1.0	75.99	**BG06G04-../D04LA4**	8.4	1070	-
0.11	16.5	43*	1.0	82.89	**BG06G04-../D04LA4**	8.4	1070	-
0.11	15	45*	1.0	93.00	**BG06G04-../D04LA4**	8.4	1070	-
0.11	13.5	45*	1.0	101.5	**BG06G04-../D04LA4**	8.4	1070	-
0.11	11.5	45*	1.0	122.0	**BG06G04-../D04LA4**	8.4	1070	-
0.11	9.1	45*	1.0	149.0	**BG06G04-../D04LA4**	8.4	1070	-
0.11	7.3	45*	1.0	185.4	**BG06G04-../D04LA4**	8.4	1070	-
0.11	5.4	45*	1.0	250.2	**BG06G04-../D04LA4**	8.4	1070	-
0.11	5.0	45*	1.0	275.2	**BG06G04-../D04LA4**	8.4	1070	-
0.11	4.1	45*	1.0	330.8	**BG06G04-../D04LA4**	8.4	1070	-
0.11	3.7	45*	1.0	367.0	**BG06G04-../D04LA4**	8.4	1070	-
0.11	3.0	45*	1.0	457.0	**BG06G04-../D04LA4**	8.4	1070	-
0.11	2.7	45*	1.0	502.6	**BG06G04-../D04LA4**	8.4	1070	-
0.11	2.3	45*	1.0	587.1	**BG06G04-../D04LA4**	8.4	1070	-
0.11	2.1	45*	1.0	645.8	**BG06G04-../D04LA4**	8.4	1070	-
0.11	1.9	45*	1.0	747.5	**BG06G04-../D04LA4**	8.4	1070	-
0.11	1.6	45*	1.0	859.3	**BG06G04-../D04LA4**	8.4	1070	-
0.11	1.5	45*	1.0	945.2	**BG06G04-../D04LA4**	8.4	1070	-
0.11	1.3	45*	1.0	1081	**BG06G04-../D04LA4**	8.4	1070	-
0.11	1.2	45*	1.0	1174	**BG06G04-../D04LA4**	8.4	1070	-
0.11	1.1	45*	1.0	1321	**BG06G04-../D04LA4**	8.4	1070	-
0.11	0.9	45*	1.0	1528	**BG06G04-../D04LA4**	8.4	1070	-
0.11	0.85	45*	1.0	1681	**BG06G04-../D04LA4**	8.4	1070	-
0.11	0.7	45*	1.0	1948	**BG06G04-../D04LA4**	8.4	1070	-
0.11	0.65	45*	1.0	2126	**BG06G04-../D04LA4**	8.4	1070	-
0.11	0.6	45*	1.0	2435	**BG06G04-../D04LA4**	8.4	1070	-
0.11	105	10	3.3	12.98	**BG06-../D04LA4**	6.1	600	-
0.11	92	11.4	3.0	14.78	**BG06-../D04LA4**	6.1	730	-
0.11	84	12.5	2.8	16.13	**BG06-../D04LA4**	6.1	740	-
0.11	78	13.4	2.8	17.40	**BG06-../D04LA4**	6.1	760	-
0.11	72	14.5	2.8	18.98	**BG06-../D04LA4**	6.1	770	-
0.11	65	16.1	2.5	20.82	**BG06-../D04LA4**	6.1	800	-
0.11	60	17.5	2.5	22.71	**BG06-../D04LA4**	6.1	810	-
0.11	53	19.8	2.3	25.48	**BG06-../D04LA4**	6.1	850	-
0.11	49	21	2.1	27.80	**BG06-../D04LA4**	6.1	840	-
0.11	42	25	1.8	32.22	**BG06-../D04LA4**	6.1	890	-
0.11	38.5	27	1.65	35.15	**BG06-../D04LA4**	6.1	880	-
0.11	37	28	1.6	36.91	**BG06-../D04LA4**	6.1	890	-
0.11	34	30.5	1.5	40.26	**BG06-../D04LA4**	6.1	890	-
0.11	29.5	35.5	1.25	46.19	**BG06-../D04LA4**	6.1	890	-
0.11	27	38.5	1.15	50.38	**BG06-../D04LA4**	6.1	940	-
0.11	26	40	1.15	52.56	**BG06-../D04LA4**	6.1	950	-
0.11	24	43.5	1.05	57.34	**BG06-../D04LA4**	6.1	1000	-
0.11	22.5	46.5	0.97	61.22	**BG06-../D04LA4**	6.1	1020	-
0.11	20.5	51	0.88	66.79	**BG06-../D04LA4**	6.1	1070	-
0.11	20	52	2.0	67.54	**BG10Z-../D04LA4**	11	2000	2800
0.11	17.5	60	2.0	77.40	**BG10Z-../D04LA4**	11	2000	2800
0.11	16	65	1.85	85.76	**BG10Z-../D04LA4**	11	2000	2800
0.11	15	70	1.7	92.19	**BG10Z-../D04LA4**	11	2000	2800
0.11	13.5	77	1.55	102.1	**BG10Z-../D04LA4**	11	2000	2800
0.11	12.5	84	1.45	109.8	**BG10Z-../D04LA4**	11	2000	2800
0.11	11.5	91	1.3	121.7	**BG10Z-../D04LA4**	11	2000	2800
0.11	10.5	100	1.2	131.8	**BG10Z-../D04LA4**	11	2000	2800
0.11	9.3	112	1.05	146.0	**BG10Z-../D04LA4**	11	2000	2800
0.11	8.2	128	0.94	166.0	**BG10Z-../D04LA4**	11	2000	2800
0.11	7.4	141	0.85	184.0	**BG10Z-../D04LA4**	11	2000	2800
0.11	7.0	150	0.8	194.6	**BG10Z-../D04LA4**	11	2000	2800

The torques marked (*) are maximum permissible torques for service factor f_B=1.0.

0.11 kW

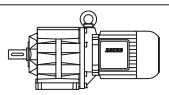

P_N	50 Hz			i	Type	m	F_{RN}	F_{RV}
	n_2	M_2	f_B					
[kW]	[1/min]	[Nm]	[—]	[:1]		[kg]	[N]	[N]
0.11	5.7	158	0.82	240.7	**BG10G06-../D04LA4**	14	2000	2800
0.11	4.9	130*	1.0	276.4	**BG10G06-../D04LA4**	14	2000	2800
0.11	4.1	130*	1.0	332.0	**BG10G06-../D04LA4**	14	2000	2800
0.11	3.6	130*	1.0	379.6	**BG10G06-../D04LA4**	14	2000	2800
0.11	3.1	130*	1.0	435.9	**BG10G06-../D04LA4**	14	2000	2800
0.11	2.7	130*	1.0	512.6	**BG10G06-../D04LA4**	14	2000	2800
0.11	2.3	130*	1.0	613.6	**BG10G06-../D04LA4**	14	2000	2800
0.11	1.9	130*	1.0	748.9	**BG10G06-../D04LA4**	14	2000	2800
0.11	1.6	130*	1.0	899.5	**BG10G06-../D04LA4**	14	2000	2800
0.11	1.3	130*	1.0	1081	**BG10G06-../D04LA4**	14	2000	2800
0.11	1.1	130*	1.0	1272	**BG10G06-../D04LA4**	14	2000	2800
0.11	0.9	130*	1.0	1523	**BG10G06-../D04LA4**	14	2000	2800
0.11	0.75	130*	1.0	1863	**BG10G06-../D04LA4**	14	2000	2800
0.11	0.6	130*	1.0	2356	**BG10G06-../D04LA4**	14	2000	2800
0.11	0.55	130*	1.0	2699	**BG10G06-../D04LA4**	14	2000	2800
0.11	0.46	130*	1.0	2944	**BG10G06-../D04LA4**	14	2000	2800
0.11	0.4	130*	1.0	3378	**BG10G06-../D04LA4**	14	2000	2800
0.11	0.37	130*	1.0	3684	**BG10G06-../D04LA4**	14	2000	2800
0.11	0.31	130*	1.0	4477	**BG10G06-../D04LA4**	14	2000	2800
0.11	0.28	130*	1.0	4884	**BG10G06-../D04LA4**	14	2000	2800
0.11	17.5	60	3.3	78.60	**BG20Z-../D04LA4**	13	5000	-
0.11	15.5	67	3.0	87.30	**BG20Z-../D04LA4**	13	5000	-
0.11	14.5	72	2.8	94.27	**BG20Z-../D04LA4**	13	5000	-
0.11	13	80	2.5	104.7	**BG20Z-../D04LA4**	13	5000	-
0.11	12	87	2.3	112.8	**BG20Z-../D04LA4**	13	5000	-
0.11	11	95	2.1	125.3	**BG20Z-../D04LA4**	13	5000	-
0.11	9.6	109	1.85	141.3	**BG20Z-../D04LA4**	13	5000	-
0.11	8.4	125	1.6	162.2	**BG20Z-../D04LA4**	13	5000	-
0.11	7.5	140	1.45	180.1	**BG20Z-../D04LA4**	13	5000	-
0.11	6.8	154	1.3	199.9	**BG20Z-../D04LA4**	13	5000	-
0.11	6.1	172	1.15	222.1	**BG20Z-../D04LA4**	13	5000	-
0.11	5.5	164	1.35	248.0	**BG20G06-../D04LA4**	17	5000	2100
0.11	4.6	199	1.1	297.9	**BG20G06-../D04LA4**	17	5000	2100
0.11	3.9	240	0.92	352.1	**BG20G06-../D04LA4**	17	5000	2100
0.11	3.5	265	0.83	391.1	**BG20G06-../D04LA4**	17	5000	2100
0.11	3.0	220*	1.0	460.0	**BG20G06-../D04LA4**	17	5000	2100
0.11	2.5	220*	1.0	550.6	**BG20G06-../D04LA4**	17	5000	2100
0.11	2.1	220*	1.0	671.9	**BG20G06-../D04LA4**	17	5000	2100
0.11	1.7	220*	1.0	807.1	**BG20G06-../D04LA4**	17	5000	2100
0.11	1.4	220*	1.0	969.9	**BG20G06-../D04LA4**	17	5000	2100
0.11	1.2	220*	1.0	1142	**BG20G06-../D04LA4**	17	5000	2100
0.11	1.0	220*	1.0	1366	**BG20G06-../D04LA4**	17	5000	2100
0.11	0.85	220*	1.0	1672	**BG20G06-../D04LA4**	17	5000	2100
0.11	0.75	220*	1.0	1824	**BG20G06-../D04LA4**	17	5000	2100
0.11	0.65	220*	1.0	2114	**BG20G06-../D04LA4**	17	5000	2100
0.11	0.6	220*	1.0	2422	**BG20G06-../D04LA4**	17	5000	2100
0.11	0.55	220*	1.0	2642	**BG20G06-../D04LA4**	17	5000	2100
0.11	0.45	220*	1.0	3031	**BG20G06-../D04LA4**	17	5000	2100
0.11	0.41	220*	1.0	3306	**BG20G06-../D04LA4**	17	5000	2100
0.11	0.34	220*	1.0	4017	**BG20G06-../D04LA4**	17	5000	2100
0.11	0.31	220*	1.0	4383	**BG20G06-../D04LA4**	17	5000	2100
0.11	5.3	171	1.9	254.9	**BG30G06-../D04LA4**	21	6000	-
0.11	4.5	200	1.65	306.2	**BG30G06-../D04LA4**	21	6000	-
0.11	3.9	240	1.35	346.8	**BG30G06-../D04LA4**	21	6000	-
0.11	3.4	275	1.2	401.9	**BG30G06-../D04LA4**	21	6000	-
0.11	2.9	325	1.0	472.8	**BG30G06-../D04LA4**	21	6000	-
0.11	2.4	395	0.82	565.8	**BG30G06-../D04LA4**	21	6000	-
0.11	2.0	325*	1.0	690.6	**BG30G06-../D04LA4**	21	6000	-
0.11	1.8	325*	1.0	760.7	**BG30G06-../D04LA4**	21	6000	-
0.11	1.7	325*	1.0	829.5	**BG30G06-../D04LA4**	21	6000	-
0.11	1.4	325*	1.0	996.8	**BG30G06-../D04LA4**	21	6000	-
0.11	1.3	325*	1.0	1088	**BG30G06-../D04LA4**	21	6000	-
0.11	1.1	325*	1.0	1280	**BG30G06-../D04LA4**	21	6000	-
0.11	1.0	325*	1.0	1404	**BG30G06-../D04LA4**	21	6000	-
0.11	0.8	325*	1.0	1718	**BG30G06-../D04LA4**	21	6000	-
0.11	0.75	325*	1.0	1875	**BG30G06-../D04LA4**	21	6000	-
0.11	0.65	325*	1.0	2173	**BG30G06-../D04LA4**	21	6000	-
0.11	0.5	325*	1.0	2715	**BG30G06-../D04LA4**	21	6000	-

The torques marked (*) are maximum permissible torques for service factor f_B=1.0.

0.11 kW

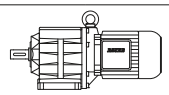

P_N	50 Hz			i	Type	m	F_{RN}	F_{RV}
	n_2	M_2	f_B					
[kW]	[1/min]	[Nm]	[—]	[:1]		[kg]	[N]	[N]
0.11	0.44	325*	1.0	3115	**BG30G06-../D04LA4**	21	6000	-
0.11	0.4	325*	1.0	3398	**BG30G06-../D04LA4**	21	6000	-
0.11	0.35	325*	1.0	3867	**BG30G06-../D04LA4**	21	6000	-
0.11	0.3	325*	1.0	4504	**BG30G06-../D04LA4**	21	6000	-

0.12 kW

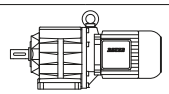

P_N	50 Hz			i	Type	m	F_{RN}	F_{RV}
	n_2	M_2	f_B					
[kW]	[1/min]	[Nm]	[—]	[:1]		[kg]	[N]	[N]
0.12	540	2.1	1.9	2.51	**BG04-../DSE04LA4**	4.4	340	-
0.12	370	3.05	1.65	3.65	**BG04-../DSE04LA4**	4.4	390	-
0.12	310	3.65	1.9	4.39	**BG04-../DSE04LA4**	4.4	380	-
0.12	255	4.45	2.0	5.36	**BG04-../DSE04LA4**	4.4	380	-
0.12	220	5.2	2.1	6.18	**BG04-../DSE04LA4**	4.4	415	-
0.12	205	5.5	1.8	6.67	**BG04-../DSE04LA4**	4.4	410	-
0.12	199	5.7	1.95	6.80	**BG04-../DSE04LA4**	4.4	420	-
0.12	158	7.2	1.55	8.58	**BG04-../DSE04LA4**	4.4	410	-
0.12	150	7.6	1.6	9.00	**BG04-../DSE04LA4**	4.4	470	-
0.12	137	8.3	1.55	9.90	**BG04-../DSE04LA4**	4.4	480	-
0.12	125	9.1	1.55	10.82	**BG04-../DSE04LA4**	4.4	480	-
0.12	114	10	1.5	11.90	**BG04-../DSE04LA4**	4.4	490	-
0.12	108	10.6	1.4	12.55	**BG04-../DSE04LA4**	4.4	490	-
0.12	103	11.1	1.45	13.20	**BG04-../DSE04LA4**	4.4	500	-
0.12	93	12.3	1.4	14.52	**BG04-../DSE04LA4**	4.4	510	-
0.12	83	13.8	1.3	16.44	**BG04-../DSE04LA4**	4.4	530	-
0.12	75	15.2	1.2	18.08	**BG04-../DSE04LA4**	4.4	540	-
0.12	64	17.9	1.05	21.12	**BG04-../DSE04LA4**	4.4	560	-
0.12	59	19.4	1.05	23.23	**BG04-../DSE04LA4**	4.4	600	-
0.12	56	20	1.0	24.45	**BG04-../DSE04LA4**	4.4	610	-
0.12	51	22	0.91	26.89	**BG04-../DSE04LA4**	4.4	650	-
0.12	295	3.85	3.1	4.59	**BG05-../DSE04LA4**	5.1	490	-
0.12	250	4.55	3.1	5.46	**BG05-../DSE04LA4**	5.1	490	-
0.12	205	5.5	3.1	6.64	**BG05-../DSE04LA4**	5.1	500	-
0.12	174	6.5	2.8	7.80	**BG05-../DSE04LA4**	5.1	530	-
0.12	166	6.9	2.6	8.15	**BG05-../DSE04LA4**	5.1	510	-
0.12	159	7.2	2.6	8.51	**BG05-../DSE04LA4**	5.1	550	-
0.12	128	8.9	2.2	10.59	**BG05-../DSE04LA4**	5.1	590	-
0.12	117	9.7	2.2	11.55	**BG05-../DSE04LA4**	5.1	600	-
0.12	113	10.1	2.1	12.05	**BG05-../DSE04LA4**	5.1	510	-
0.12	108	10.6	2.1	12.60	**BG05-../DSE04LA4**	5.1	610	-
0.12	99	11.5	2.0	13.75	**BG05-../DSE04LA4**	5.1	630	-
0.12	89	12.8	1.9	15.23	**BG05-../DSE04LA4**	5.1	640	-
0.12	82	13.9	1.8	16.62	**BG05-../DSE04LA4**	5.1	660	-
0.12	72	15.9	1.65	18.82	**BG05-../DSE04LA4**	5.1	680	-
0.12	66	17.3	1.55	20.53	**BG05-../DSE04LA4**	5.1	700	-
0.12	57	20	1.4	24.00	**BG05-../DSE04LA4**	5.1	740	-
0.12	52	22	1.3	26.18	**BG05-../DSE04LA4**	5.1	760	-
0.12	49	23	1.3	27.82	**BG05-../DSE04LA4**	5.1	770	-
0.12	44.5	25.5	1.2	30.35	**BG05-../DSE04LA4**	5.1	760	-
0.12	39	29	1.05	35.00	**BG05-../DSE04LA4**	5.1	810	-
0.12	35.5	32	0.94	38.18	**BG05-../DSE04LA4**	5.1	850	-
0.12	34	33.5	0.9	39.94	**BG05-../DSE04LA4**	5.1	860	-
0.12	31	36.5	0.82	43.57	**BG05-../DSE04LA4**	5.1	900	-
0.12	18	40*	1.0	75.99	**BG06G04-../DSE04LA4**	8.4	1070	-
0.12	16.5	43*	1.0	82.89	**BG06G04-../DSE04LA4**	8.4	1070	-
0.12	15	45*	1.0	93.00	**BG06G04-../DSE04LA4**	8.4	1070	-
0.12	13.5	45*	1.0	101.5	**BG06G04-../DSE04LA4**	8.4	1070	-
0.12	11.5	45*	1.0	122.0	**BG06G04-../DSE04LA4**	8.4	1070	-
0.12	9.1	45*	1.0	149.0	**BG06G04-../DSE04LA4**	8.4	1070	-
0.12	7.3	45*	1.0	185.4	**BG06G04-../DSE04LA4**	8.4	1070	-
0.12	5.4	45*	1.0	250.2	**BG06G04-../DSE04LA4**	8.4	1070	-
0.12	5.0	45*	1.0	275.2	**BG06G04-../DSE04LA4**	8.4	1070	-
0.12	4.1	45*	1.0	330.8	**BG06G04-../DSE04LA4**	8.4	1070	-
0.12	3.7	45*	1.0	367.0	**BG06G04-../DSE04LA4**	8.4	1070	-

The torques marked (*) are maximum permissible torques for service factor f_B=1.0.

0.12 kW

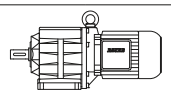

P_N	50 Hz			i	Type	m	F_{RN}	F_{RV}
	n_2	M_2	f_B					
[kW]	[1/min]	[Nm]	[—]	[:1]		[kg]	[N]	[N]
0.12	3.0	45*	1.0	457.0	**BG06G04-../DSE04LA4**	8.4	1070	-
0.12	2.7	45*	1.0	502.6	**BG06G04-../DSE04LA4**	8.4	1070	-
0.12	2.3	45*	1.0	587.1	**BG06G04-../DSE04LA4**	8.4	1070	-
0.12	2.1	45*	1.0	645.8	**BG06G04-../DSE04LA4**	8.4	1070	-
0.12	1.9	45*	1.0	747.5	**BG06G04-../DSE04LA4**	8.4	1070	-
0.12	1.6	45*	1.0	859.3	**BG06G04-../DSE04LA4**	8.4	1070	-
0.12	1.5	45*	1.0	945.2	**BG06G04-../DSE04LA4**	8.4	1070	-
0.12	1.3	45*	1.0	1081	**BG06G04-../DSE04LA4**	8.4	1070	-
0.12	1.2	45*	1.0	1174	**BG06G04-../DSE04LA4**	8.4	1070	-
0.12	1.1	45*	1.0	1321	**BG06G04-../DSE04LA4**	8.4	1070	-
0.12	0.9	45*	1.0	1528	**BG06G04-../DSE04LA4**	8.4	1070	-
0.12	0.85	45*	1.0	1681	**BG06G04-../DSE04LA4**	8.4	1070	-
0.12	0.7	45*	1.0	1948	**BG06G04-../DSE04LA4**	8.4	1070	-
0.12	0.65	45*	1.0	2126	**BG06G04-../DSE04LA4**	8.4	1070	-
0.12	0.6	45*	1.0	2435	**BG06G04-../DSE04LA4**	8.4	1070	-
0.12	110	10.4	3.2	12.30	**BG06-../DSE04LA4**	6.1	670	-
0.12	105	10.9	3.0	12.98	**BG06-../DSE04LA4**	6.1	600	-
0.12	92	12.4	2.7	14.78	**BG06-../DSE04LA4**	6.1	730	-
0.12	84	13.6	2.6	16.13	**BG06-../DSE04LA4**	6.1	740	-
0.12	78	14.6	2.6	17.40	**BG06-../DSE04LA4**	6.1	760	-
0.12	72	15.9	2.5	18.98	**BG06-../DSE04LA4**	6.1	770	-
0.12	65	17.6	2.3	20.82	**BG06-../DSE04LA4**	6.1	800	-
0.12	60	19.1	2.3	22.71	**BG06-../DSE04LA4**	6.1	810	-
0.12	53	21.5	2.1	25.48	**BG06-../DSE04LA4**	6.1	850	-
0.12	49	23	1.95	27.80	**BG06-../DSE04LA4**	6.1	840	-
0.12	42	27	1.65	32.22	**BG06-../DSE04LA4**	6.1	890	-
0.12	38.5	29.5	1.55	35.15	**BG06-../DSE04LA4**	6.1	880	-
0.12	37	30.5	1.5	36.91	**BG06-../DSE04LA4**	6.1	890	-
0.12	34	33.5	1.35	40.26	**BG06-../DSE04LA4**	6.1	890	-
0.12	29.5	38.5	1.15	46.19	**BG06-../DSE04LA4**	6.1	890	-
0.12	27	42	1.05	50.38	**BG06-../DSE04LA4**	6.1	940	-
0.12	26	44	1.0	52.56	**BG06-../DSE04LA4**	6.1	950	-
0.12	24	47.5	0.95	57.34	**BG06-../DSE04LA4**	6.1	1000	-
0.12	22.5	50	0.9	61.22	**BG06-../DSE04LA4**	6.1	1020	-
0.12	20.5	55	0.82	66.79	**BG06-../DSE04LA4**	6.1	1070	-
0.12	20	57	1.8	67.54	**BG10Z-../DSE04LA4**	11	2000	2800
0.12	17.5	65	1.85	77.40	**BG10Z-../DSE04LA4**	11	2000	2800
0.12	16	71	1.7	85.76	**BG10Z-../DSE04LA4**	11	2000	2800
0.12	15	76	1.6	92.19	**BG10Z-../DSE04LA4**	11	2000	2800
0.12	13.5	84	1.45	102.1	**BG10Z-../DSE04LA4**	11	2000	2800
0.12	12.5	91	1.3	109.8	**BG10Z-../DSE04LA4**	11	2000	2800
0.12	11.5	99	1.2	121.7	**BG10Z-../DSE04LA4**	11	2000	2800
0.12	10.5	109	1.1	131.8	**BG10Z-../DSE04LA4**	11	2000	2800
0.12	9.3	123	0.98	146.0	**BG10Z-../DSE04LA4**	11	2000	2800
0.12	8.2	139	0.86	166.0	**BG10Z-../DSE04LA4**	11	2000	2800
0.12	7.0	143	0.91	194.9	**BG10G06-../DSE04LA4**	14	2000	2800
0.12	5.7	130*	1.0	240.7	**BG10G06-../DSE04LA4**	14	2000	2800
0.12	4.9	130*	1.0	276.4	**BG10G06-../DSE04LA4**	14	2000	2800
0.12	4.1	130*	1.0	332.0	**BG10G06-../DSE04LA4**	14	2000	2800
0.12	3.6	130*	1.0	379.6	**BG10G06-../DSE04LA4**	14	2000	2800
0.12	3.1	130*	1.0	435.9	**BG10G06-../DSE04LA4**	14	2000	2800
0.12	2.7	130*	1.0	512.6	**BG10G06-../DSE04LA4**	14	2000	2800
0.12	2.3	130*	1.0	613.6	**BG10G06-../DSE04LA4**	14	2000	2800
0.12	1.9	130*	1.0	748.9	**BG10G06-../DSE04LA4**	14	2000	2800
0.12	1.6	130*	1.0	899.5	**BG10G06-../DSE04LA4**	14	2000	2800
0.12	1.3	130*	1.0	1081	**BG10G06-../DSE04LA4**	14	2000	2800
0.12	1.1	130*	1.0	1272	**BG10G06-../DSE04LA4**	14	2000	2800
0.12	0.9	130*	1.0	1523	**BG10G06-../DSE04LA4**	14	2000	2800
0.12	0.75	130*	1.0	1863	**BG10G06-../DSE04LA4**	14	2000	2800
0.12	0.6	130*	1.0	2356	**BG10G06-../DSE04LA4**	14	2000	2800
0.12	0.55	130*	1.0	2699	**BG10G06-../DSE04LA4**	14	2000	2800
0.12	0.46	130*	1.0	2944	**BG10G06-../DSE04LA4**	14	2000	2800
0.12	0.4	130*	1.0	3378	**BG10G06-../DSE04LA4**	14	2000	2800
0.12	0.37	130*	1.0	3684	**BG10G06-../DSE04LA4**	14	2000	2800
0.12	0.31	130*	1.0	4477	**BG10G06-../DSE04LA4**	14	2000	2800
0.12	0.28	130*	1.0	4884	**BG10G06-../DSE04LA4**	14	2000	2800
0.12	17.5	65	3.1	78.60	**BG20Z-../DSE04LA4**	13	5000	-

The torques marked (*) are maximum permissible torques for service factor f_B=1.0.

0.12 kW

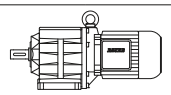

P_N	50 Hz			i	Type	m	F_{RN}	F_{RV}
	n_2	M_2	f_B					
[kW]	[1/min]	[Nm]	[—]	[:1]		[kg]	[N]	[N]
0.12	15.5	73	2.7	87.30	**BG20Z-../DSE04LA4**	13	5000	-
0.12	14.5	79	2.5	94.27	**BG20Z-../DSE04LA4**	13	5000	-
0.12	13	88	2.3	104.7	**BG20Z-../DSE04LA4**	13	5000	-
0.12	12	95	2.1	112.8	**BG20Z-../DSE04LA4**	13	5000	-
0.12	11	104	1.9	125.3	**BG20Z-../DSE04LA4**	13	5000	-
0.12	9.6	119	1.7	141.3	**BG20Z-../DSE04LA4**	13	5000	-
0.12	8.4	136	1.45	162.2	**BG20Z-../DSE04LA4**	13	5000	-
0.12	7.5	152	1.3	180.1	**BG20Z-../DSE04LA4**	13	5000	-
0.12	6.8	168	1.2	199.9	**BG20Z-../DSE04LA4**	13	5000	-
0.12	6.1	187	1.05	222.1	**BG20Z-../DSE04LA4**	13	5000	-
0.12	5.5	182	1.2	248.0	**BG20G06-../DSE04LA4**	17	5000	2100
0.12	4.6	220	1.0	297.9	**BG20G06-../DSE04LA4**	17	5000	2100
0.12	3.9	265	0.83	352.1	**BG20G06-../DSE04LA4**	17	5000	2100
0.12	3.5	220*	1.0	391.1	**BG20G06-../DSE04LA4**	17	5000	2100
0.12	3.0	220*	1.0	460.0	**BG20G06-../DSE04LA4**	17	5000	2100
0.12	2.5	220*	1.0	550.6	**BG20G06-../DSE04LA4**	17	5000	2100
0.12	2.1	220*	1.0	671.9	**BG20G06-../DSE04LA4**	17	5000	2100
0.12	1.7	220*	1.0	807.1	**BG20G06-../DSE04LA4**	17	5000	2100
0.12	1.4	220*	1.0	969.9	**BG20G06-../DSE04LA4**	17	5000	2100
0.12	1.2	220*	1.0	1142	**BG20G06-../DSE04LA4**	17	5000	2100
0.12	1.0	220*	1.0	1366	**BG20G06-../DSE04LA4**	17	5000	2100
0.12	0.85	220*	1.0	1672	**BG20G06-../DSE04LA4**	17	5000	2100
0.12	0.75	220*	1.0	1824	**BG20G06-../DSE04LA4**	17	5000	2100
0.12	0.65	220*	1.0	2114	**BG20G06-../DSE04LA4**	17	5000	2100
0.12	0.6	220*	1.0	2422	**BG20G06-../DSE04LA4**	17	5000	2100
0.12	0.55	220*	1.0	2642	**BG20G06-../DSE04LA4**	17	5000	2100
0.12	0.45	220*	1.0	3031	**BG20G06-../DSE04LA4**	17	5000	2100
0.12	0.41	220*	1.0	3306	**BG20G06-../DSE04LA4**	17	5000	2100
0.12	0.34	220*	1.0	4017	**BG20G06-../DSE04LA4**	17	5000	2100
0.12	0.31	220*	1.0	4383	**BG20G06-../DSE04LA4**	17	5000	2100
0.12	5.3	189	1.7	254.9	**BG30G06-../DSE04LA4**	21	6000	-
0.12	4.5	220	1.5	306.2	**BG30G06-../DSE04LA4**	21	6000	-
0.12	3.9	265	1.25	346.8	**BG30G06-../DSE04LA4**	21	6000	-
0.12	3.4	300	1.1	401.9	**BG30G06-../DSE04LA4**	21	6000	-
0.12	2.9	360	0.9	472.8	**BG30G06-../DSE04LA4**	21	6000	-
0.12	2.4	325*	1.0	565.8	**BG30G06-../DSE04LA4**	21	6000	-
0.12	2.0	325*	1.0	690.6	**BG30G06-../DSE04LA4**	21	6000	-
0.12	1.8	325*	1.0	760.7	**BG30G06-../DSE04LA4**	21	6000	-
0.12	1.7	325*	1.0	829.5	**BG30G06-../DSE04LA4**	21	6000	-
0.12	1.4	325*	1.0	996.8	**BG30G06-../DSE04LA4**	21	6000	-
0.12	1.3	325*	1.0	1088	**BG30G06-../DSE04LA4**	21	6000	-
0.12	1.1	325*	1.0	1280	**BG30G06-../DSE04LA4**	21	6000	-
0.12	1.0	325*	1.0	1404	**BG30G06-../DSE04LA4**	21	6000	-
0.12	0.8	325*	1.0	1718	**BG30G06-../DSE04LA4**	21	6000	-
0.12	0.75	325*	1.0	1875	**BG30G06-../DSE04LA4**	21	6000	-
0.12	0.65	325*	1.0	2173	**BG30G06-../DSE04LA4**	21	6000	-
0.12	0.5	325*	1.0	2715	**BG30G06-../DSE04LA4**	21	6000	-
0.12	0.44	325*	1.0	3115	**BG30G06-../DSE04LA4**	21	6000	-
0.12	0.4	325*	1.0	3398	**BG30G06-../DSE04LA4**	21	6000	-
0.12	0.35	325*	1.0	3867	**BG30G06-../DSE04LA4**	21	6000	-
0.12	0.3	325*	1.0	4504	**BG30G06-../DSE04LA4**	21	6000	-

0.18 kW

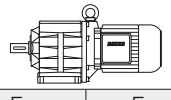

P_N	50 Hz			i	Type	m	F_{RN}	F_{RV}
	n_2	M_2	f_B					
[kW]	[1/min]	[Nm]	[—]	[:1]		[kg]	[N]	[N]
0.18	520	3.3	2.7	2.64	**BG05-../DSE05LA4**	7.0	420	-
0.18	400	4.25	2.4	3.38	**BG05-../DSE05LA4**	7.0	460	-
0.18	295	5.8	2.1	4.59	**BG05-../DSE05LA4**	7.0	490	-
0.18	250	6.8	2.1	5.46	**BG05-../DSE05LA4**	7.0	490	-
0.18	225	7.6	2.2	6.09	**BG05-../DSE05LA4**	7.0	480	-
0.18	205	8.3	2.0	6.64	**BG05-../DSE05LA4**	7.0	500	-
0.18	174	9.8	1.85	7.80	**BG05-../DSE05LA4**	7.0	530	-
0.18	166	10.3	1.75	8.15	**BG05-../DSE05LA4**	7.0	510	-
0.18	159	10.8	1.75	8.51	**BG05-../DSE05LA4**	7.0	550	-

The torques marked (*) are maximum permissible torques for service factor f_B=1.0.

0.18 kW

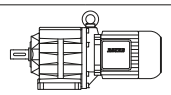

P_N	50 Hz			i	Type	m	F_{RN}	F_{RV}
	n_2	M_2	f_B					
[kW]	[1/min]	[Nm]	[—]	[:1]		[kg]	[N]	[N]
0.18	128	13.4	1.5	10.59	**BG05-../DSE05LA4**	7.0	590	-
0.18	117	14.6	1.45	11.55	**BG05-../DSE05LA4**	7.0	600	-
0.18	113	15.2	1.4	12.05	**BG05-../DSE05LA4**	7.0	510	-
0.18	108	15.9	1.4	12.60	**BG05-../DSE05LA4**	7.0	610	-
0.18	99	17.3	1.35	13.75	**BG05-../DSE05LA4**	7.0	630	-
0.18	89	19.3	1.25	15.23	**BG05-../DSE05LA4**	7.0	640	-
0.18	82	20.5	1.2	16.62	**BG05-../DSE05LA4**	7.0	660	-
0.18	72	23.5	1.1	18.82	**BG05-../DSE05LA4**	7.0	680	-
0.18	66	26	1.05	20.53	**BG05-../DSE05LA4**	7.0	700	-
0.18	57	30	0.93	24.00	**BG05-../DSE05LA4**	7.0	740	-
0.18	52	33	0.88	26.18	**BG05-../DSE05LA4**	7.0	760	-
0.18	49	35	0.86	27.82	**BG05-../DSE05LA4**	7.0	770	-
0.18	230	7.4	3.2	5.96	**BG06-../DSE05LA4**	8.0	570	-
0.18	193	8.9	2.9	7.01	**BG06-../DSE05LA4**	8.0	580	-
0.18	161	10.6	2.6	8.39	**BG06-../DSE05LA4**	8.0	600	-
0.18	144	11.9	2.5	9.38	**BG06-../DSE05LA4**	8.0	640	-
0.18	132	13	2.4	10.24	**BG06-../DSE05LA4**	8.0	640	-
0.18	120	14.3	2.2	11.28	**BG06-../DSE05LA4**	8.0	670	-
0.18	110	15.6	2.1	12.30	**BG06-../DSE05LA4**	8.0	670	-
0.18	105	16.3	2.0	12.98	**BG06-../DSE05LA4**	8.0	600	-
0.18	92	18.6	1.85	14.78	**BG06-../DSE05LA4**	8.0	730	-
0.18	84	20	1.75	16.13	**BG06-../DSE05LA4**	8.0	740	-
0.18	78	22	1.75	17.40	**BG06-../DSE05LA4**	8.0	760	-
0.18	72	23.5	1.7	18.98	**BG06-../DSE05LA4**	8.0	770	-
0.18	65	26	1.55	20.82	**BG06-../DSE05LA4**	8.0	800	-
0.18	60	28.5	1.5	22.71	**BG06-../DSE05LA4**	8.0	810	-
0.18	53	32	1.4	25.48	**BG06-../DSE05LA4**	8.0	850	-
0.18	49	35	1.3	27.80	**BG06-../DSE05LA4**	8.0	840	-
0.18	42	40.5	1.1	32.22	**BG06-../DSE05LA4**	8.0	890	-
0.18	38.5	44.5	1.0	35.15	**BG06-../DSE05LA4**	8.0	880	-
0.18	37	46	0.98	36.91	**BG06-../DSE05LA4**	8.0	890	-
0.18	34	50	0.9	40.26	**BG06-../DSE05LA4**	8.0	890	-
0.18	46.5	36.5	3.3	29.09	**BG10-../DSE06LA4**	13	1540	2150
0.18	43	39.5	3.0	31.52	**BG10-../DSE06LA4**	13	1600	2200
0.18	39	44	2.7	34.92	**BG10-../DSE06LA4**	13	1690	2350
0.18	34.5	49.5	2.4	39.70	**BG10-../DSE06LA4**	13	1780	2450
0.18	31	55	2.2	43.99	**BG10-../DSE06LA4**	13	1880	2600
0.18	29.5	58	2.1	46.55	**BG10-../DSE06LA4**	13	1920	2650
0.18	26.5	64	1.9	51.57	**BG10-../DSE06LA4**	13	2000	2800
0.18	23.5	73	1.65	57.48	**BG10-../DSE06LA4**	13	2000	2800
0.18	21.5	79	1.5	63.69	**BG10-../DSE06LA4**	13	2000	2800
0.18	20.5	83	1.45	66.00	**BG10-../DSE06LA4**	13	2000	2800
0.18	18.5	92	1.3	73.13	**BG10-../DSE06LA4**	13	2000	2800
0.18	17.5	98	1.2	77.40	**BG10Z-../DSE06LA4**	14	2000	2800
0.18	16	107	1.1	85.76	**BG10Z-../DSE06LA4**	14	2000	2800
0.18	15	114	1.05	92.19	**BG10Z-../DSE06LA4**	14	2000	2800
0.18	13.5	127	0.94	102.1	**BG10Z-../DSE06LA4**	14	2000	2800
0.18	12.5	137	0.88	109.8	**BG10Z-../DSE06LA4**	14	2000	2800
0.18	11.5	149	0.81	121.7	**BG10Z-../DSE06LA4**	14	2000	2800
0.18	36	47.5	3.2	37.90	**BG15-../DSE06LA4**	13	3000	6000
0.18	28.5	60	3.3	47.92	**BG20-../DSE06LA4**	16	4750	-
0.18	25.5	67	3.0	53.22	**BG20-../DSE06LA4**	16	4950	-
0.18	23	74	2.7	59.07	**BG20-../DSE06LA4**	16	5000	-
0.18	21	81	2.5	65.62	**BG20-../DSE06LA4**	16	5000	-
0.18	20	85	2.4	67.53	**BG20Z-../DSE06LA4**	16	5000	-
0.18	17.5	98	2.0	78.60	**BG20Z-../DSE06LA4**	16	5000	-
0.18	15.5	110	1.8	87.30	**BG20Z-../DSE06LA4**	16	5000	-
0.18	14.5	118	1.7	94.27	**BG20Z-../DSE06LA4**	16	5000	-
0.18	13	132	1.5	104.7	**BG20Z-../DSE06LA4**	16	5000	-
0.18	12	143	1.4	112.8	**BG20Z-../DSE06LA4**	16	5000	-
0.18	11	156	1.3	125.3	**BG20Z-../DSE06LA4**	16	5000	-
0.18	9.6	179	1.1	141.3	**BG20Z-../DSE06LA4**	16	5000	-
0.18	8.4	200	1.0	162.2	**BG20Z-../DSE06LA4**	16	5000	-
0.18	7.5	225	0.89	180.1	**BG20Z-../DSE06LA4**	16	5000	-
0.18	6.8	250	0.8	199.9	**BG20Z-../DSE06LA4**	16	5000	-

The torques marked (*) are maximum permissible torques for service factor f_B=1.0.

0.18 kW

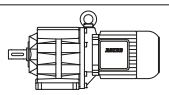

P_N	50 Hz			i	Type	m	F_{RN}	F_{RV}
	n_2	M_2	f_B					
[kW]	[1/min]	[Nm]	[—]	[:1]		[kg]	[N]	[N]
0.18	21	81	3.3	65.79	**BG30Z-../DSE06LA4**	22	6000	-
0.18	18.5	92	3.3	73.51	**BG30Z-../DSE06LA4**	22	6000	-
0.18	17	101	3.0	81.55	**BG30Z-../DSE06LA4**	22	6000	-
0.18	16	107	2.8	86.13	**BG30Z-../DSE06LA4**	22	6000	-
0.18	14.5	118	2.5	95.55	**BG30Z-../DSE06LA4**	22	6000	-
0.18	12.5	137	2.2	109.6	**BG30Z-../DSE06LA4**	22	6000	-
0.18	11.5	149	2.0	121.6	**BG30Z-../DSE06LA4**	22	6000	-
0.18	11	156	1.9	128.5	**BG30Z-../DSE06LA4**	22	6000	-
0.18	9.5	180	1.65	142.5	**BG30Z-../DSE06LA4**	22	6000	-
0.18	9.0	191	1.55	151.5	**BG30Z-../DSE06LA4**	22	6000	-
0.18	8.1	210	1.45	168.1	**BG30Z-../DSE06LA4**	22	6000	-
0.18	7.4	230	1.3	182.9	**BG30Z-../DSE06LA4**	22	6000	-
0.18	6.7	255	1.2	202.9	**BG30Z-../DSE06LA4**	22	6000	-
0.18	6.0	285	1.05	225.9	**BG30Z-../DSE06LA4**	22	6000	-
0.18	5.2	330	0.91	261.9	**BG30Z-../DSE06LA4**	22	6000	-
0.18	4.7	365	0.82	290.5	**BG30Z-../DSE06LA4**	22	6000	-
0.18	4.5	350	0.93	306.2	**BG30G06-../DSE06LA4**	25	6000	-
0.18	13	132	3.2	107.5	**BG40Z-../DSE06LA4**	38	7000	-
0.18	11.5	149	2.9	121.3	**BG40Z-../DSE06LA4**	38	7000	-
0.18	10.5	163	2.6	134.6	**BG40Z-../DSE06LA4**	38	7000	-
0.18	9.6	179	2.4	141.4	**BG40Z-../DSE06LA4**	38	7000	-
0.18	8.7	197	2.2	156.9	**BG40Z-../DSE06LA4**	38	7000	-
0.18	8.2	205	2.1	166.1	**BG40Z-../DSE06LA4**	38	7000	-
0.18	7.4	230	1.85	184.4	**BG40Z-../DSE06LA4**	38	7000	-
0.18	6.8	250	1.7	199.9	**BG40Z-../DSE06LA4**	38	7000	-
0.18	6.1	280	1.5	221.9	**BG40Z-../DSE06LA4**	38	7000	-
0.18	5.5	310	1.35	246.5	**BG40Z-../DSE06LA4**	38	7000	-
0.18	5.0	340	1.25	273.6	**BG40Z-../DSE06LA4**	38	7000	-
0.18	4.7	275	1.7	288.6	**BG40G10-../DSE06LA4**	43	7000	-
0.18	3.9	340	1.35	353.5	**BG40G10-../DSE06LA4**	43	7000	-
0.18	3.1	445	1.05	448.8	**BG40G10-../DSE06LA4**	43	7000	-
0.18	2.6	540	0.86	534.2	**BG40G10-../DSE06LA4**	43	7000	-
0.18	8.2	205	3.1	164.9	**BG50Z-../DSE06LA4**	47	10000	-
0.18	7.4	230	2.7	182.8	**BG50Z-../DSE06LA4**	47	10000	-
0.18	6.6	260	2.4	204.7	**BG50Z-../DSE06LA4**	47	10000	-
0.18	6.0	285	2.2	226.9	**BG50Z-../DSE06LA4**	47	10000	-
0.18	5.3	320	1.95	258.6	**BG50Z-../DSE06LA4**	47	10000	-
0.18	4.8	355	1.75	286.7	**BG50Z-../DSE06LA4**	47	10000	-
0.18	3.9	340	2.0	351.7	**BG50G10-../DSE06LA4**	51	10000	-
0.18	3.1	445	1.55	446.5	**BG50G10-../DSE06LA4**	51	10000	-
0.18	2.6	540	1.3	531.5	**BG50G10-../DSE06LA4**	51	10000	-
0.18	2.2	670	1.05	621.3	**BG50G10-../DSE06LA4**	51	10000	-
0.18	2.0	730	0.95	708.3	**BG50G10-../DSE06LA4**	51	10000	-
0.18	1.8	810	0.85	785.1	**BG50G10-../DSE06LA4**	51	10000	-
0.18	2.7	485	2.7	504.9	**BG60G20-../DSE06LA4**	100	16000	-
0.18	2.5	520	2.5	559.5	**BG60G20-../DSE06LA4**	100	16000	-
0.18	2.1	650	2.0	651.3	**BG60G20-../DSE06LA4**	100	16000	-
0.18	1.7	800	1.65	804.5	**BG60G20-../DSE06LA4**	100	16000	-
0.18	1.6	840	1.55	891.5	**BG60G20-../DSE06LA4**	100	16000	-
0.18	1.3	1080	1.2	1051	**BG60G20-../DSE06LA4**	100	16000	-
0.18	1.2	1180	1.1	1168	**BG60G20-../DSE06LA4**	100	16000	-
0.18	1.1	1290	1.0	1346	**BG60G20-../DSE06LA4**	100	16000	-
0.18	1.8	750	3.3	790.2	**BG70G20-../DSE06LA4**	130	20000	-
0.18	1.6	860	2.9	877.6	**BG70G20-../DSE06LA4**	130	20000	-
0.18	1.4	1000	2.5	1035	**BG70G20-../DSE06LA4**	130	20000	-
0.18	1.2	1190	2.1	1193	**BG70G20-../DSE06LA4**	130	20000	-
0.18	1.0	1470	1.7	1389	**BG70G20-../DSE06LA4**	130	20000	-
0.18	0.9	1670	1.5	1543	**BG70G20-../DSE06LA4**	130	20000	-
0.18	0.85	1780	1.4	1666	**BG70G20-../DSE06LA4**	130	20000	-
0.18	0.7	2200	1.15	1994	**BG70G20-../DSE06LA4**	130	20000	-
0.18	0.65	2400	1.05	2215	**BG70G20-../DSE06LA4**	130	20000	-

The torques marked (*) are maximum permissible torques for service factor f_B=1.0.

0.25 kW

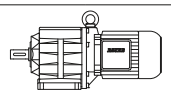

P_N	50 Hz			i	Type	m	F_{RN}	F_{RV}
	n_2	M_2	f_B					
[kW]	[1/min]	[Nm]	[—]	[:1]		[kg]	[N]	[N]
0.25	520	4.55	2.0	2.64	**BG05-../DSE05LA4**	7.0	420	-
0.25	400	5.9	1.7	3.38	**BG05-../DSE05LA4**	7.0	460	-
0.25	295	8.0	1.5	4.59	**BG05-../DSE05LA4**	7.0	490	-
0.25	250	9.5	1.45	5.46	**BG05-../DSE05LA4**	7.0	490	-
0.25	225	10.6	1.6	6.09	**BG05-../DSE05LA4**	7.0	480	-
0.25	205	11.6	1.45	6.64	**BG05-../DSE05LA4**	7.0	500	-
0.25	174	13.7	1.3	7.80	**BG05-../DSE05LA4**	7.0	530	-
0.25	166	14.3	1.25	8.15	**BG05-../DSE05LA4**	7.0	510	-
0.25	159	15	1.25	8.51	**BG05-../DSE05LA4**	7.0	550	-
0.25	128	18.6	1.1	10.59	**BG05-../DSE05LA4**	7.0	590	-
0.25	117	20	1.05	11.55	**BG05-../DSE05LA4**	7.0	600	-
0.25	113	21	1.0	12.05	**BG05-../DSE05LA4**	7.0	510	-
0.25	108	22	1.0	12.60	**BG05-../DSE05LA4**	7.0	610	-
0.25	99	24	0.96	13.75	**BG05-../DSE05LA4**	7.0	630	-
0.25	89	26.5	0.91	15.23	**BG05-../DSE05LA4**	7.0	640	-
0.25	82	29	0.86	16.62	**BG05-../DSE05LA4**	7.0	660	-
0.25	360	6.6	3.0	3.78	**BG06-../DSE05LA4**	8.0	520	-
0.25	300	7.9	2.8	4.54	**BG06-../DSE05LA4**	8.0	530	-
0.25	230	10.3	2.3	5.96	**BG06-../DSE05LA4**	8.0	570	-
0.25	193	12.3	2.1	7.01	**BG06-../DSE05LA4**	8.0	580	-
0.25	161	14.8	1.9	8.39	**BG06-../DSE05LA4**	8.0	600	-
0.25	144	16.5	1.8	9.38	**BG06-../DSE05LA4**	8.0	640	-
0.25	132	18	1.7	10.24	**BG06-../DSE05LA4**	8.0	640	-
0.25	120	19.8	1.6	11.28	**BG06-../DSE05LA4**	8.0	670	-
0.25	110	21.5	1.55	12.30	**BG06-../DSE05LA4**	8.0	670	-
0.25	105	22.5	1.45	12.98	**BG06-../DSE05LA4**	8.0	600	-
0.25	92	25.5	1.35	14.78	**BG06-../DSE05LA4**	8.0	730	-
0.25	84	28	1.25	16.13	**BG06-../DSE05LA4**	8.0	740	-
0.25	78	30.5	1.25	17.40	**BG06-../DSE05LA4**	8.0	760	-
0.25	72	33	1.2	18.98	**BG06-../DSE05LA4**	8.0	770	-
0.25	65	36.5	1.1	20.82	**BG06-../DSE05LA4**	8.0	800	-
0.25	60	39.5	1.1	22.71	**BG06-../DSE05LA4**	8.0	810	-
0.25	53	45	1.0	25.48	**BG06-../DSE05LA4**	8.0	850	-
0.25	49	48.5	0.93	27.80	**BG06-../DSE05LA4**	8.0	840	-
0.25	42	56	0.8	32.22	**BG06-../DSE05LA4**	8.0	890	-
0.25	66	36	3.3	20.51	**BG10-../DSE06LA4**	13	1290	1800
0.25	62	38.5	3.1	22.04	**BG10-../DSE06LA4**	13	1330	1860
0.25	56	42.5	2.8	24.42	**BG10-../DSE06LA4**	13	1410	1970
0.25	52	45.5	2.6	26.26	**BG10-../DSE06LA4**	13	1460	2000
0.25	46.5	51	2.4	29.09	**BG10-../DSE06LA4**	13	1540	2150
0.25	43	55	2.2	31.52	**BG10-../DSE06LA4**	13	1600	2200
0.25	39	61	1.95	34.92	**BG10-../DSE06LA4**	13	1690	2350
0.25	34.5	69	1.75	39.70	**BG10-../DSE06LA4**	13	1780	2450
0.25	31	77	1.55	43.99	**BG10-../DSE06LA4**	13	1880	2600
0.25	29.5	80	1.5	46.55	**BG10-../DSE06LA4**	13	1920	2650
0.25	26.5	90	1.35	51.57	**BG10-../DSE06LA4**	13	2000	2800
0.25	23.5	101	1.2	57.48	**BG10-../DSE06LA4**	13	2000	2800
0.25	21.5	111	1.1	63.69	**BG10-../DSE06LA4**	13	2000	2800
0.25	20.5	116	1.05	66.00	**BG10-../DSE06LA4**	13	2000	2800
0.25	18.5	129	0.93	73.13	**BG10-../DSE06LA4**	13	2000	2800
0.25	17.5	136	0.88	77.40	**BG10Z-../DSE06LA4**	14	2000	2800
0.25	16	149	0.81	85.76	**BG10Z-../DSE06LA4**	14	2000	2800
0.25	50	47.5	3.2	27.08	**BG15-../DSE06LA4**	13	3000	6000
0.25	45	53	2.8	30.08	**BG15-../DSE06LA4**	13	3000	6000
0.25	39.5	60	2.5	34.20	**BG15-../DSE06LA4**	13	3000	6000
0.25	36	66	2.3	37.90	**BG15-../DSE06LA4**	13	3000	6000
0.25	36.5	65	3.1	37.02	**BG20-../DSE06LA4**	16	4300	-
0.25	32.5	73	2.7	41.76	**BG20-../DSE06LA4**	16	4500	-
0.25	29.5	80	2.5	46.38	**BG20-../DSE06LA4**	16	4700	-
0.25	28.5	83	2.4	47.92	**BG20-../DSE06LA4**	16	4750	-
0.25	25.5	93	2.2	53.22	**BG20-../DSE06LA4**	16	4950	-
0.25	23	103	1.95	59.07	**BG20-../DSE06LA4**	16	5000	-
0.25	21	113	1.75	65.62	**BG20-../DSE06LA4**	16	5000	-
0.25	20	119	1.7	67.53	**BG20Z-../DSE06LA4**	16	5000	-
0.25	17.5	136	1.45	78.60	**BG20Z-../DSE06LA4**	16	5000	-
0.25	15.5	154	1.3	87.30	**BG20Z-../DSE06LA4**	16	5000	-

The torques marked (*) are maximum permissible torques for service factor f_B=1.0.

0.25 kW

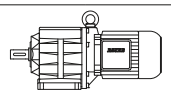

P_N	50 Hz			i	Type	m	F_{RN}	F_{RV}
	n_2	M_2	f_B					
[kW]	[1/min]	[Nm]	[—]	[:1]		[kg]	[N]	[N]
0.25	14.5	164	1.2	94.27	**BG20Z-../DSE06LA4**	16	5000	-
0.25	13	183	1.1	104.7	**BG20Z-../DSE06LA4**	16	5000	-
0.25	12	198	1.0	112.8	**BG20Z-../DSE06LA4**	16	5000	-
0.25	11	215	0.93	125.3	**BG20Z-../DSE06LA4**	16	5000	-
0.25	9.6	245	0.82	141.3	**BG20Z-../DSE06LA4**	16	5000	-
0.25	26	91	3.3	52.44	**BG30-../DSE06LA4**	20	6000	-
0.25	23.5	101	3.0	58.18	**BG30-../DSE06LA4**	20	6000	-
0.25	22.5	106	2.8	60.79	**BG30-../DSE06LA4**	20	6000	-
0.25	20.5	116	2.6	67.44	**BG30-../DSE06LA4**	20	6000	-
0.25	18.5	129	2.3	73.51	**BG30Z-../DSE06LA4**	22	6000	-
0.25	17	140	2.1	81.55	**BG30Z-../DSE06LA4**	22	6000	-
0.25	16	149	2.0	86.13	**BG30Z-../DSE06LA4**	22	6000	-
0.25	14.5	164	1.85	95.55	**BG30Z-../DSE06LA4**	22	6000	-
0.25	12.5	191	1.55	109.6	**BG30Z-../DSE06LA4**	22	6000	-
0.25	11.5	205	1.45	121.6	**BG30Z-../DSE06LA4**	22	6000	-
0.25	11	215	1.4	128.5	**BG30Z-../DSE06LA4**	22	6000	-
0.25	9.5	250	1.2	142.5	**BG30Z-../DSE06LA4**	22	6000	-
0.25	9.0	265	1.15	151.5	**BG30Z-../DSE06LA4**	22	6000	-
0.25	8.1	290	1.05	168.1	**BG30Z-../DSE06LA4**	22	6000	-
0.25	7.4	320	0.94	182.9	**BG30Z-../DSE06LA4**	22	6000	-
0.25	6.7	355	0.85	202.9	**BG30Z-../DSE06LA4**	22	6000	-
0.25	18	132	3.2	75.19	**BG40Z-../DSE06LA4**	38	7000	-
0.25	16.5	144	3.0	82.00	**BG40Z-../DSE06LA4**	38	7000	-
0.25	15	159	2.7	91.02	**BG40Z-../DSE06LA4**	38	7000	-
0.25	14	170	2.5	96.86	**BG40Z-../DSE06LA4**	38	7000	-
0.25	13	183	2.3	107.5	**BG40Z-../DSE06LA4**	38	7000	-
0.25	11.5	205	2.1	121.3	**BG40Z-../DSE06LA4**	38	7000	-
0.25	10.5	225	1.9	134.6	**BG40Z-../DSE06LA4**	38	7000	-
0.25	9.6	245	1.75	141.4	**BG40Z-../DSE06LA4**	38	7000	-
0.25	8.7	270	1.55	156.9	**BG40Z-../DSE06LA4**	38	7000	-
0.25	8.2	290	1.45	166.1	**BG40Z-../DSE06LA4**	38	7000	-
0.25	7.4	320	1.35	184.4	**BG40Z-../DSE06LA4**	38	7000	-
0.25	6.8	350	1.2	199.9	**BG40Z-../DSE06LA4**	38	7000	-
0.25	6.1	390	1.1	221.9	**BG40Z-../DSE06LA4**	38	7000	-
0.25	5.5	430	0.99	246.5	**BG40Z-../DSE06LA4**	38	7000	-
0.25	5.0	475	0.89	273.6	**BG40Z-../DSE06LA4**	38	7000	-
0.25	4.7	415	1.1	288.6	**BG40G10-../DSE06LA4**	43	7000	-
0.25	3.9	510	0.91	353.5	**BG40G10-../DSE06LA4**	43	7000	-
0.25	10.5	225	2.8	128.9	**BG50Z-../DSE06LA4**	47	10000	-
0.25	9.5	250	2.5	142.9	**BG50Z-../DSE06LA4**	47	10000	-
0.25	8.2	290	2.2	164.9	**BG50Z-../DSE06LA4**	47	10000	-
0.25	7.4	320	1.95	182.8	**BG50Z-../DSE06LA4**	47	10000	-
0.25	6.6	360	1.75	204.7	**BG50Z-../DSE06LA4**	47	10000	-
0.25	6.0	395	1.6	226.9	**BG50Z-../DSE06LA4**	47	10000	-
0.25	5.3	450	1.4	258.6	**BG50Z-../DSE06LA4**	47	10000	-
0.25	4.8	495	1.25	286.7	**BG50Z-../DSE06LA4**	47	10000	-
0.25	3.9	510	1.35	351.7	**BG50G10-../DSE06LA4**	51	10000	-
0.25	3.1	660	1.05	446.5	**BG50G10-../DSE06LA4**	51	10000	-
0.25	2.6	800	0.86	531.5	**BG50G10-../DSE06LA4**	51	10000	-
0.25	4.5	400	3.3	306.1	**BG60G20-../DSE06LA4**	100	16000	-
0.25	4.1	440	3.0	334.3	**BG60G20-../DSE06LA4**	100	16000	-
0.25	3.7	490	2.7	370.5	**BG60G20-../DSE06LA4**	100	16000	-
0.25	3.1	600	2.2	437.3	**BG60G20-../DSE06LA4**	100	16000	-
0.25	2.7	730	1.8	504.9	**BG60G20-../DSE06LA4**	100	16000	-
0.25	2.5	790	1.65	559.5	**BG60G20-../DSE06LA4**	100	16000	-
0.25	2.1	970	1.35	651.3	**BG60G20-../DSE06LA4**	100	16000	-
0.25	1.7	1200	1.1	804.5	**BG60G20-../DSE06LA4**	100	16000	-
0.25	1.6	1260	1.05	891.5	**BG60G20-../DSE06LA4**	100	16000	-
0.25	1.3	1590	0.82	1051	**BG60G20-../DSE06LA4**	100	16000	-
0.25	2.4	840	3.0	577.3	**BG70G20-../DSE06LA4**	130	20000	-
0.25	2.1	960	2.6	665.8	**BG70G20-../DSE06LA4**	130	20000	-
0.25	1.8	1120	2.2	790.2	**BG70G20-../DSE06LA4**	130	20000	-
0.25	1.6	1280	1.95	877.6	**BG70G20-../DSE06LA4**	130	20000	-
0.25	1.4	1480	1.7	1035	**BG70G20-../DSE06LA4**	130	20000	-
0.25	1.2	1750	1.45	1193	**BG70G20-../DSE06LA4**	130	20000	-

The torques marked (*) are maximum permissible torques for service factor f_B=1.0.

0.25 kW

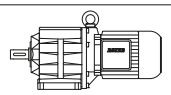

P_N	50 Hz			i	Type	m	F_{RN}	F_{RV}
	n_2	M_2	f_B					
[kW]	[1/min]	[Nm]	[—]	[:1]		[kg]	[N]	[N]
0.25	1.0	2100	1.2	1389	**BG70G20-../DSE06LA4**	130	20000	-
0.25	0.9	2400	1.05	1543	**BG70G20-../DSE06LA4**	130	20000	-

0.37 kW

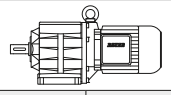

P_N	50 Hz			i	Type	m	F_{RN}	F_{RV}
	n_2	M_2	f_B					
[kW]	[1/min]	[Nm]	[—]	[:1]		[kg]	[N]	[N]
0.37	520	6.7	1.35	2.64	**BG05-../DSE07LA4**	11	420	-
0.37	400	8.8	1.15	3.38	**BG05-../DSE07LA4**	11	460	-
0.37	295	11.9	1.0	4.59	**BG05-../DSE07LA4**	11	490	-
0.37	250	14.1	0.99	5.46	**BG05-../DSE07LA4**	11	490	-
0.37	225	15.7	1.1	6.09	**BG05-../DSE07LA4**	11	480	-
0.37	205	17.2	0.99	6.64	**BG05-../DSE07LA4**	11	500	-
0.37	174	20	0.9	7.80	**BG05-../DSE07LA4**	11	530	-
0.37	166	21	0.86	8.15	**BG05-../DSE07LA4**	11	510	-
0.37	159	22	0.86	8.51	**BG05-../DSE07LA4**	11	550	-
0.37	360	9.8	2.0	3.78	**BG06-../DSE07LA4**	12	520	-
0.37	300	11.7	1.9	4.54	**BG06-../DSE07LA4**	12	530	-
0.37	230	15.3	1.55	5.96	**BG06-../DSE07LA4**	12	570	-
0.37	193	18.3	1.4	7.01	**BG06-../DSE07LA4**	12	580	-
0.37	161	21.5	1.3	8.39	**BG06-../DSE07LA4**	12	600	-
0.37	144	24.5	1.2	9.38	**BG06-../DSE07LA4**	12	640	-
0.37	132	26.5	1.15	10.24	**BG06-../DSE07LA4**	12	640	-
0.37	120	29	1.1	11.28	**BG06-../DSE07LA4**	12	670	-
0.37	110	32	1.05	12.30	**BG06-../DSE07LA4**	12	670	-
0.37	105	33.5	0.99	12.98	**BG06-../DSE07LA4**	12	600	-
0.37	92	38	0.89	14.78	**BG06-../DSE07LA4**	12	730	-
0.37	84	42	0.83	16.13	**BG06-../DSE07LA4**	12	740	-
0.37	78	45	0.84	17.40	**BG06-../DSE07LA4**	12	760	-
0.37	72	49	0.82	18.98	**BG06-../DSE07LA4**	12	770	-
0.37	103	34	3.2	13.21	**BG10-../DSE07LA4**	15	1070	1490
0.37	93	37.5	3.0	14.58	**BG10-../DSE07LA4**	15	1100	1540
0.37	84	42	2.8	16.15	**BG10-../DSE07LA4**	15	1140	1590
0.37	73	48	2.5	18.51	**BG10-../DSE07LA4**	15	1210	1690
0.37	66	53	2.3	20.51	**BG10-../DSE07LA4**	15	1290	1800
0.37	62	56	2.1	22.04	**BG10-../DSE07LA4**	15	1330	1860
0.37	56	63	1.9	24.42	**BG10-../DSE07LA4**	15	1410	1970
0.37	52	67	1.8	26.26	**BG10-../DSE07LA4**	15	1460	2000
0.37	46.5	75	1.6	29.09	**BG10-../DSE07LA4**	15	1540	2150
0.37	43	82	1.45	31.52	**BG10-../DSE07LA4**	15	1600	2200
0.37	39	90	1.35	34.92	**BG10-../DSE07LA4**	15	1690	2350
0.37	34.5	102	1.2	39.70	**BG10-../DSE07LA4**	15	1780	2450
0.37	31	113	1.05	43.99	**BG10-../DSE07LA4**	15	1880	2600
0.37	29.5	119	1.0	46.55	**BG10-../DSE07LA4**	15	1920	2650
0.37	26.5	133	0.9	51.57	**BG10-../DSE07LA4**	15	2000	2800
0.37	23.5	150	0.8	57.48	**BG10-../DSE07LA4**	15	2000	2800
0.37	50	70	2.1	27.08	**BG15-../DSE07LA4**	15	3000	6000
0.37	45	78	1.9	30.08	**BG15-../DSE07LA4**	15	3000	6000
0.37	39.5	89	1.7	34.20	**BG15-../DSE07LA4**	15	3000	6000
0.37	36	98	1.55	37.90	**BG15-../DSE07LA4**	15	3000	6000
0.37	53	66	3.0	25.79	**BG20-../DSE07LA4**	18	3700	-
0.37	48.5	72	2.8	27.85	**BG20-../DSE07LA4**	18	3800	-
0.37	44	80	2.5	30.94	**BG20-../DSE07LA4**	18	4000	-
0.37	41	86	2.3	33.33	**BG20-../DSE07LA4**	18	4100	-
0.37	36.5	96	2.1	37.02	**BG20-../DSE07LA4**	18	4300	-
0.37	32.5	108	1.85	41.76	**BG20-../DSE07LA4**	18	4500	-
0.37	29.5	119	1.7	46.38	**BG20-../DSE07LA4**	18	4700	-
0.37	28.5	123	1.65	47.92	**BG20-../DSE07LA4**	18	4750	-
0.37	25.5	138	1.45	53.22	**BG20-../DSE07LA4**	18	4950	-
0.37	23	153	1.3	59.07	**BG20-../DSE07LA4**	18	5000	-
0.37	21	168	1.2	65.62	**BG20-../DSE07LA4**	18	5000	-
0.37	20	176	1.15	67.53	**BG20Z-../DSE07LA4**	19	5000	-

The torques marked (*) are maximum permissible torques for service factor f_B=1.0.

0.37 kW

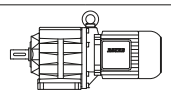

P_N	50 Hz			i	Type	m	F_{RN}	F_{RV}
	n_2	M_2	f_B					
[kW]	[1/min]	[Nm]	[—]	[:1]		[kg]	[N]	[N]
0.37	17.5	200	1.0	78.60	**BG20Z-../DSE07LA4**	19	5000	-
0.37	15.5	225	0.89	87.30	**BG20Z-../DSE07LA4**	19	5000	-
0.37	14.5	240	0.83	94.27	**BG20Z-../DSE07LA4**	19	5000	-
0.37	38.5	91	3.3	35.17	**BG30-../DSE07LA4**	22	5500	-
0.37	35	100	3.0	39.02	**BG30-../DSE07LA4**	22	5800	-
0.37	32	110	2.7	42.46	**BG30-../DSE07LA4**	22	5900	-
0.37	29	121	2.5	47.11	**BG30-../DSE07LA4**	22	6000	-
0.37	26	135	2.2	52.44	**BG30-../DSE07LA4**	22	6000	-
0.37	23.5	150	2.0	58.18	**BG30-../DSE07LA4**	22	6000	-
0.37	22.5	157	1.9	60.79	**BG30-../DSE07LA4**	22	6000	-
0.37	20.5	172	1.75	67.44	**BG30-../DSE07LA4**	22	6000	-
0.37	18.5	191	1.55	73.51	**BG30Z-../DSE07LA4**	25	6000	-
0.37	17	205	1.45	81.55	**BG30Z-../DSE07LA4**	25	6000	-
0.37	16	220	1.35	86.13	**BG30Z-../DSE07LA4**	25	6000	-
0.37	14.5	240	1.25	95.55	**BG30Z-../DSE07LA4**	25	6000	-
0.37	12.5	280	1.05	109.6	**BG30Z-../DSE07LA4**	25	6000	-
0.37	11.5	305	0.98	121.6	**BG30Z-../DSE07LA4**	25	6000	-
0.37	11	320	0.94	128.5	**BG30Z-../DSE07LA4**	25	6000	-
0.37	9.5	370	0.81	142.5	**BG30Z-../DSE07LA4**	25	6000	-
0.37	20	176	2.4	67.74	**BG40Z-../DSE07LA4**	40	7000	-
0.37	18	196	2.2	75.19	**BG40Z-../DSE07LA4**	40	7000	-
0.37	16.5	210	2.0	82.00	**BG40Z-../DSE07LA4**	40	7000	-
0.37	15	235	1.8	91.02	**BG40Z-../DSE07LA4**	40	7000	-
0.37	14	250	1.7	96.86	**BG40Z-../DSE07LA4**	40	7000	-
0.37	13	270	1.55	107.5	**BG40Z-../DSE07LA4**	40	7000	-
0.37	11.5	305	1.4	121.3	**BG40Z-../DSE07LA4**	40	7000	-
0.37	10.5	335	1.25	134.6	**BG40Z-../DSE07LA4**	40	7000	-
0.37	9.6	365	1.15	141.4	**BG40Z-../DSE07LA4**	40	7000	-
0.37	8.7	405	1.05	156.9	**BG40Z-../DSE07LA4**	40	7000	-
0.37	8.2	430	0.99	166.1	**BG40Z-../DSE07LA4**	40	7000	-
0.37	7.4	475	0.89	184.4	**BG40Z-../DSE07LA4**	40	7000	-
0.37	6.8	510	0.83	199.9	**BG40Z-../DSE07LA4**	40	7000	-
0.37	17	205	3.1	79.78	**BG50Z-../DSE07LA4**	50	10000	-
0.37	14.5	240	2.6	95.58	**BG50Z-../DSE07LA4**	50	10000	-
0.37	13	270	2.3	106.0	**BG50Z-../DSE07LA4**	50	10000	-
0.37	10.5	335	1.9	128.9	**BG50Z-../DSE07LA4**	50	10000	-
0.37	9.5	370	1.7	142.9	**BG50Z-../DSE07LA4**	50	10000	-
0.37	8.2	430	1.45	164.9	**BG50Z-../DSE07LA4**	50	10000	-
0.37	7.4	475	1.35	182.8	**BG50Z-../DSE07LA4**	50	10000	-
0.37	6.6	530	1.2	204.7	**BG50Z-../DSE07LA4**	50	10000	-
0.37	6.0	580	1.1	226.9	**BG50Z-../DSE07LA4**	50	10000	-
0.37	5.3	660	0.95	258.6	**BG50Z-../DSE07LA4**	50	10000	-
0.37	4.8	730	0.86	286.7	**BG50Z-../DSE07LA4**	50	10000	-
0.37	3.9	800	0.86	351.7	**BG50G10-../DSE07LA4**	54	10000	-
0.37	4.9	600	2.2	276.2	**BG60G20-../DSE07LA4**	102	16000	-
0.37	4.5	650	2.0	306.1	**BG60G20-../DSE07LA4**	102	16000	-
0.37	4.1	720	1.8	334.3	**BG60G20-../DSE07LA4**	102	16000	-
0.37	3.7	790	1.65	370.5	**BG60G20-../DSE07LA4**	102	16000	-
0.37	3.1	970	1.35	437.3	**BG60G20-../DSE07LA4**	102	16000	-
0.37	2.7	1160	1.1	504.9	**BG60G20-../DSE07LA4**	102	16000	-
0.37	2.5	1240	1.05	559.5	**BG60G20-../DSE07LA4**	102	16000	-
0.37	2.1	1510	0.86	651.3	**BG60G20-../DSE07LA4**	102	16000	-
0.37	3.5	860	2.9	387.6	**BG70G20-../DSE07LA4**	132	20000	-
0.37	3.3	940	2.7	417.8	**BG70G20-../DSE07LA4**	132	20000	-
0.37	2.8	1110	2.3	495.9	**BG70G20-../DSE07LA4**	132	20000	-
0.37	2.4	1320	1.9	577.3	**BG70G20-../DSE07LA4**	132	20000	-
0.37	2.1	1510	1.65	665.8	**BG70G20-../DSE07LA4**	132	20000	-
0.37	1.8	1760	1.4	790.2	**BG70G20-../DSE07LA4**	132	20000	-
0.37	1.6	2000	1.25	877.6	**BG70G20-../DSE07LA4**	132	20000	-
0.37	1.4	2300	1.1	1035	**BG70G20-../DSE07LA4**	132	20000	-
0.37	1.2	2700	0.93	1193	**BG70G20-../DSE07LA4**	132	20000	-

The torques marked (*) are maximum permissible torques for service factor f_B=1.0.

0.55 kW

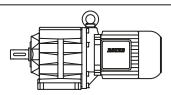

P_N	50 Hz			i	Type	m	F_{RN}	F_{RV}
	n_2	M_2	f_B					
[kW]	[1/min]	[Nm]	[—]	[:1]		[kg]	[N]	[N]
0.55	500	10.5	1.7	2.82	**BG06-../DSE08MA4**	16	470	-
0.55	375	14	1.45	3.78	**BG06-../DSE08MA4**	16	520	-
0.55	310	16.9	1.3	4.54	**BG06-../DSE08MA4**	16	530	-
0.55	235	22	1.1	5.96	**BG06-../DSE08MA4**	16	570	-
0.55	200	26	1.0	7.01	**BG06-../DSE08MA4**	16	580	-
0.55	184	28.5	0.98	7.65	**BG06-../DSE08MA4**	16	580	-
0.55	167	31	0.9	8.39	**BG06-../DSE08MA4**	16	600	-
0.55	150	35	0.86	9.38	**BG06-../DSE08MA4**	16	640	-
0.55	137	38	0.82	10.24	**BG06-../DSE08MA4**	16	640	-
0.55	210	25	3.2	6.78	**BG10-../DSE08MA4**	16	660	920
0.55	184	28.5	3.1	7.63	**BG10-../DSE08MA4**	16	900	1250
0.55	174	30	2.9	8.07	**BG10-../DSE08MA4**	16	660	920
0.55	151	34.5	2.8	9.33	**BG10-../DSE08MA4**	16	950	1330
0.55	136	38.5	2.6	10.34	**BG10-../DSE08MA4**	16	1000	1400
0.55	118	44.5	2.4	11.92	**BG10-../DSE08MA4**	16	1030	1440
0.55	106	49.5	2.2	13.21	**BG10-../DSE08MA4**	16	1070	1490
0.55	97	54	2.1	14.58	**BG10-../DSE08MA4**	16	1100	1540
0.55	87	60	1.95	16.15	**BG10-../DSE08MA4**	16	1140	1590
0.55	76	69	1.75	18.51	**BG10-../DSE08MA4**	16	1210	1690
0.55	69	76	1.6	20.51	**BG10-../DSE08MA4**	16	1290	1800
0.55	64	82	1.45	22.04	**BG10-../DSE08MA4**	16	1330	1860
0.55	58	90	1.35	24.42	**BG10-../DSE08MA4**	16	1410	1970
0.55	54	97	1.25	26.26	**BG10-../DSE08MA4**	16	1460	2000
0.55	48.5	108	1.1	29.09	**BG10-../DSE08MA4**	16	1540	2150
0.55	44.5	118	1.0	31.52	**BG10-../DSE08MA4**	16	1600	2200
0.55	40.5	129	0.93	34.92	**BG10-../DSE08MA4**	16	1690	2350
0.55	35.5	147	0.82	39.70	**BG10-../DSE08MA4**	16	1780	2450
0.55	52	101	1.5	27.08	**BG15-../DSE08MA4**	16	3000	6000
0.55	47	111	1.35	30.08	**BG15-../DSE08MA4**	16	3000	6000
0.55	41	128	1.15	34.20	**BG15-../DSE08MA4**	16	3000	6000
0.55	37	141	1.05	37.90	**BG15-../DSE08MA4**	16	3000	6000
0.55	96	54	3.2	14.67	**BG20-../DSE08MA4**	19	3050	-
0.55	90	58	3.1	15.58	**BG20-../DSE08MA4**	19	3100	-
0.55	81	64	2.9	17.31	**BG20-../DSE08MA4**	19	3200	-
0.55	71	73	2.7	19.95	**BG20-../DSE08MA4**	19	3350	-
0.55	64	82	2.4	22.16	**BG20-../DSE08MA4**	19	3500	-
0.55	61	86	2.3	23.22	**BG20-../DSE08MA4**	19	3550	-
0.55	55	95	2.1	25.79	**BG20-../DSE08MA4**	19	3700	-
0.55	51	102	1.95	27.85	**BG20-../DSE08MA4**	19	3800	-
0.55	45.5	115	1.75	30.94	**BG20-../DSE08MA4**	19	4000	-
0.55	42.5	123	1.65	33.33	**BG20-../DSE08MA4**	19	4100	-
0.55	38	138	1.45	37.02	**BG20-../DSE08MA4**	19	4300	-
0.55	34	154	1.3	41.76	**BG20-../DSE08MA4**	19	4500	-
0.55	30.5	172	1.15	46.38	**BG20-../DSE08MA4**	19	4700	-
0.55	29.5	178	1.1	47.92	**BG20-../DSE08MA4**	19	4750	-
0.55	26.5	198	1.0	53.22	**BG20-../DSE08MA4**	19	4950	-
0.55	24	215	0.93	59.07	**BG20-../DSE08MA4**	19	5000	-
0.55	21.5	240	0.83	65.62	**BG20-../DSE08MA4**	19	5000	-
0.55	21	250	0.8	67.53	**BG20Z-../DSE08MA4**	20	5000	-
0.55	56	93	3.2	25.45	**BG30-../DSE08MA4**	23	4850	-
0.55	50	105	2.9	28.24	**BG30-../DSE08MA4**	23	5100	-
0.55	47	111	2.7	29.83	**BG30-../DSE08MA4**	23	5200	-
0.55	42.5	123	2.4	33.09	**BG30-../DSE08MA4**	23	5400	-
0.55	40	131	2.3	35.17	**BG30-../DSE08MA4**	23	5500	-
0.55	36	145	2.1	39.02	**BG30-../DSE08MA4**	23	5800	-
0.55	33	159	1.9	42.46	**BG30-../DSE08MA4**	23	5900	-
0.55	30	175	1.7	47.11	**BG30-../DSE08MA4**	23	6000	-
0.55	27	194	1.55	52.44	**BG30-../DSE08MA4**	23	6000	-
0.55	24.5	210	1.45	58.18	**BG30-../DSE08MA4**	23	6000	-
0.55	23.5	220	1.35	60.79	**BG30-../DSE08MA4**	23	6000	-
0.55	21	250	1.2	67.44	**BG30-../DSE08MA4**	23	6000	-
0.55	19.5	265	1.15	73.51	**BG30Z-../DSE08MA4**	26	6000	-
0.55	17.5	300	1.0	81.55	**BG30Z-../DSE08MA4**	26	6000	-
0.55	16.5	315	0.95	86.13	**BG30Z-../DSE08MA4**	26	6000	-
0.55	15	350	0.86	95.55	**BG30Z-../DSE08MA4**	26	6000	-

The torques marked (*) are maximum permissible torques for service factor f_B=1.0.

0.55 kW

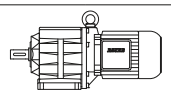

P_N	50 Hz			i	Type	m	F_{RN}	F_{RV}
	n_2	M_2	f_B					
[kW]	[1/min]	[Nm]	[—]	[:1]		[kg]	[N]	[N]
0.55	41	128	3.3	34.20	**BG40-../DSE08MA4**	38	7000	-
0.55	37	141	3.0	37.96	**BG40-../DSE08MA4**	38	7000	-
0.55	35	150	2.8	40.19	**BG40-../DSE08MA4**	38	7000	-
0.55	31.5	166	2.6	44.62	**BG40-../DSE08MA4**	38	7000	-
0.55	29	181	2.3	48.36	**BG40-../DSE08MA4**	38	7000	-
0.55	26.5	198	2.1	53.69	**BG40-../DSE08MA4**	38	7000	-
0.55	23.5	220	1.95	59.64	**BG40-../DSE08MA4**	38	7000	-
0.55	21.5	240	1.75	66.20	**BG40-../DSE08MA4**	38	7000	-
0.55	21	250	1.7	67.74	**BG40Z-../DSE08MA4**	42	7000	-
0.55	19	275	1.55	75.19	**BG40Z-../DSE08MA4**	42	7000	-
0.55	17.5	300	1.4	82.00	**BG40Z-../DSE08MA4**	42	7000	-
0.55	15.5	335	1.25	91.02	**BG40Z-../DSE08MA4**	42	7000	-
0.55	14.5	360	1.2	96.86	**BG40Z-../DSE08MA4**	42	7000	-
0.55	13.5	385	1.1	107.5	**BG40Z-../DSE08MA4**	42	7000	-
0.55	12	435	0.98	121.3	**BG40Z-../DSE08MA4**	42	7000	-
0.55	10.5	500	0.85	134.6	**BG40Z-../DSE08MA4**	42	7000	-
0.55	10	520	0.82	141.4	**BG40Z-../DSE08MA4**	42	7000	-
0.55	27	194	3.2	52.12	**BG50-../DSE08MA4**	46	10000	-
0.55	24	215	2.9	59.42	**BG50-../DSE08MA4**	46	10000	-
0.55	21.5	240	2.6	65.86	**BG50-../DSE08MA4**	46	10000	-
0.55	19.5	265	2.4	71.97	**BG50Z-../DSE08MA4**	51	10000	-
0.55	18	290	2.2	79.78	**BG50Z-../DSE08MA4**	51	10000	-
0.55	15	350	1.8	95.58	**BG50Z-../DSE08MA4**	51	10000	-
0.55	13.5	385	1.65	106.0	**BG50Z-../DSE08MA4**	51	10000	-
0.55	11	475	1.35	128.9	**BG50Z-../DSE08MA4**	51	10000	-
0.55	9.8	530	1.2	142.9	**BG50Z-../DSE08MA4**	51	10000	-
0.55	8.5	610	1.05	164.9	**BG50Z-../DSE08MA4**	51	10000	-
0.55	7.7	680	0.93	182.8	**BG50Z-../DSE08MA4**	51	10000	-
0.55	6.9	760	0.83	204.7	**BG50Z-../DSE08MA4**	51	10000	-
0.55	14	375	3.2	101.0	**BG60Z-../DSE08MA4**	96	16000	-
0.55	12	435	2.8	119.2	**BG60Z-../DSE08MA4**	96	16000	-
0.55	11	475	2.5	132.1	**BG60Z-../DSE08MA4**	96	16000	-
0.55	8.9	590	2.0	158.0	**BG60Z-../DSE08MA4**	96	16000	-
0.55	8.0	650	1.85	175.1	**BG60Z-../DSE08MA4**	96	16000	-
0.55	6.9	760	1.6	204.6	**BG60Z-../DSE08MA4**	96	16000	-
0.55	6.2	840	1.45	226.7	**BG60Z-../DSE08MA4**	96	16000	-
0.55	5.7	920	1.3	247.7	**BG60Z-../DSE08MA4**	96	16000	-
0.55	5.2	1010	1.2	274.5	**BG60Z-../DSE08MA4**	96	16000	-
0.55	5.1	910	1.45	276.2	**BG60G20-../DSE08MA4**	103	16000	-
0.55	4.6	1010	1.3	306.1	**BG60G20-../DSE08MA4**	103	16000	-
0.55	4.2	1110	1.15	334.3	**BG60G20-../DSE08MA4**	103	16000	-
0.55	3.8	1220	1.05	370.5	**BG60G20-../DSE08MA4**	103	16000	-
0.55	3.3	1420	0.92	437.3	**BG60G20-../DSE08MA4**	103	16000	-
0.55	7.3	710	3.2	194.4	**BG70Z-../DSE08MA4**	136	20000	-
0.55	6.7	780	2.9	210.5	**BG70Z-../DSE08MA4**	136	20000	-
0.55	5.7	920	2.5	249.8	**BG70Z-../DSE08MA4**	136	20000	-
0.55	5.5	840	3.0	255.5	**BG70G20-../DSE08MA4**	133	20000	-
0.55	5.1	910	2.7	276.7	**BG70G20-../DSE08MA4**	133	20000	-
0.55	4.3	1080	2.3	328.4	**BG70G20-../DSE08MA4**	133	20000	-
0.55	3.7	1270	1.95	387.6	**BG70G20-../DSE08MA4**	133	20000	-
0.55	3.4	1420	1.75	417.8	**BG70G20-../DSE08MA4**	133	20000	-
0.55	2.9	1660	1.5	495.9	**BG70G20-../DSE08MA4**	133	20000	-
0.55	2.5	1950	1.3	577.3	**BG70G20-../DSE08MA4**	133	20000	-
0.55	2.2	2200	1.15	665.8	**BG70G20-../DSE08MA4**	133	20000	-
0.55	1.8	2700	0.93	790.2	**BG70G20-../DSE08MA4**	133	20000	-
0.55	1.6	3050	0.82	877.6	**BG70G20-../DSE08MA4**	133	20000	-
0.55	2.9	1430	3.2	484.3	**BG80G40-../DSE08MA4**	215	26000	-
0.55	2.5	1720	2.7	572.0	**BG80G40-../DSE08MA4**	215	26000	-
0.55	2.2	1900	2.4	657.8	**BG80G40-../DSE08MA4**	215	26000	-
0.55	2.0	2100	2.2	730.3	**BG80G40-../DSE08MA4**	215	26000	-
0.55	1.8	2350	1.95	817.4	**BG80G40-../DSE08MA4**	215	26000	-
0.55	1.6	2700	1.7	907.6	**BG80G40-../DSE08MA4**	215	26000	-
0.55	1.4	3200	1.45	1042	**BG80G40-../DSE08MA4**	215	26000	-
0.55	1.2	3800	1.2	1261	**BG80G40-../DSE08MA4**	215	26000	-
0.55	1.0	4700	0.98	1400	**BG80G40-../DSE08MA4**	215	26000	-

The torques marked (*) are maximum permissible torques for service factor f_B=1.0.

0.55 kW

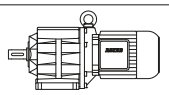

P_N	50 Hz			i	Type	m	F_{RN}	F_{RV}
	n_2	M_2	f_B					
[kW]	[1/min]	[Nm]	[—]	[:1]		[kg]	[N]	[N]
0.55	1.2	3700	2.5	1174	**BG90G50-../DSE08MA4**	324	65000	-
0.55	1.1	4100	2.2	1301	**BG90G50-../DSE08MA4**	324	65000	-
0.55	0.9	5100	1.8	1583	**BG90G50-../DSE08MA4**	324	65000	-
0.55	0.8	5800	1.6	1756	**BG90G50-../DSE08MA4**	324	65000	-
0.55	0.7	6800	1.35	2026	**BG90G50-../DSE08MA4**	324	65000	-
0.55	0.6	8000	1.15	2514	**BG90G50-../DSE08MA4**	324	65000	-
0.55	0.55	8800	1.05	2786	**BG90G50-../DSE08MA4**	324	65000	-
0.55	0.65	6000	3.1	2154	**BG100G50-../DSE08MA4**	512	90000	-
0.55	0.55	7100	2.6	2656	**BG100G50-../DSE08MA4**	512	90000	-
0.55	0.48	8600	2.2	2952	**BG100G50-../DSE08MA4**	512	90000	-
0.55	0.43	9700	1.9	3286	**BG100G50-../DSE08MA4**	512	90000	-
0.55	0.39	10900	1.7	3644	**BG100G50-../DSE08MA4**	512	90000	-
0.55	0.33	13400	1.4	4366	**BG100G50-../DSE08MA4**	512	90000	-
0.55	0.29	15600	1.2	4839	**BG100G50-../DSE08MA4**	512	90000	-

0.75 kW

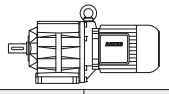

P_N	50 Hz			i	Type	m	F_{RN}	F_{RV}
	n_2	M_2	f_B					
[kW]	[1/min]	[Nm]	[—]	[:1]		[kg]	[N]	[N]
0.75	500	14.3	1.25	2.82	**BG06-../DSE08LA4**	18	470	-
0.75	375	19.1	1.05	3.78	**BG06-../DSE08LA4**	18	520	-
0.75	310	23	0.96	4.54	**BG06-../DSE08LA4**	18	530	-
0.75	235	30	0.8	5.96	**BG06-../DSE08LA4**	18	570	-
0.75	325	22	3.1	4.36	**BG10-../DSE08LA4**	18	650	910
0.75	265	27	2.8	5.34	**BG10-../DSE08LA4**	18	620	910
0.75	210	34	2.4	6.78	**BG10-../DSE08LA4**	18	660	920
0.75	205	34.5	2.6	6.89	**BG10-../DSE08LA4**	18	850	1200
0.75	184	38.5	2.3	7.63	**BG10-../DSE08LA4**	18	900	1250
0.75	174	41	2.1	8.07	**BG10-../DSE08LA4**	18	660	920
0.75	151	47	2.1	9.33	**BG10-../DSE08LA4**	18	950	1330
0.75	136	52	1.9	10.34	**BG10-../DSE08LA4**	18	1000	1400
0.75	118	60	1.75	11.92	**BG10-../DSE08LA4**	18	1030	1440
0.75	106	67	1.65	13.21	**BG10-../DSE08LA4**	18	1070	1490
0.75	97	73	1.55	14.58	**BG10-../DSE08LA4**	18	1100	1540
0.75	87	82	1.45	16.15	**BG10-../DSE08LA4**	18	1140	1590
0.75	76	94	1.3	18.51	**BG10-../DSE08LA4**	18	1210	1690
0.75	69	103	1.15	20.51	**BG10-../DSE08LA4**	18	1290	1800
0.75	64	111	1.1	22.04	**BG10-../DSE08LA4**	18	1330	1860
0.75	58	123	0.98	24.42	**BG10-../DSE08LA4**	18	1410	1970
0.75	54	132	0.91	26.26	**BG10-../DSE08LA4**	18	1460	2000
0.75	48.5	147	0.82	29.09	**BG10-../DSE08LA4**	18	1540	2150
0.75	52	137	1.1	27.08	**BG15-../DSE08LA4**	18	3000	6000
0.75	47	152	0.99	30.08	**BG15-../DSE08LA4**	18	3000	6000
0.75	41	174	0.86	34.20	**BG15-../DSE08LA4**	18	3000	6000
0.75	169	42	2.9	8.29	**BG20-../DSE08LA4**	20	2250	-
0.75	158	45	3.2	8.91	**BG20-../DSE08LA4**	20	2600	-
0.75	146	49	2.5	9.65	**BG20-../DSE08LA4**	20	2250	-
0.75	133	53	2.9	10.54	**BG20-../DSE08LA4**	20	2700	-
0.75	120	59	2.7	11.71	**BG20-../DSE08LA4**	20	2800	-
0.75	106	67	2.5	13.21	**BG20-../DSE08LA4**	20	2900	-
0.75	96	74	2.3	14.67	**BG20-../DSE08LA4**	20	3050	-
0.75	90	79	2.2	15.58	**BG20-../DSE08LA4**	20	3100	-
0.75	81	88	2.1	17.31	**BG20-../DSE08LA4**	20	3200	-
0.75	71	100	1.95	19.95	**BG20-../DSE08LA4**	20	3350	-
0.75	64	111	1.8	22.16	**BG20-../DSE08LA4**	20	3500	-
0.75	61	117	1.7	23.22	**BG20-../DSE08LA4**	20	3550	-
0.75	55	130	1.55	25.79	**BG20-../DSE08LA4**	20	3700	-
0.75	51	140	1.45	27.85	**BG20-../DSE08LA4**	20	3800	-
0.75	45.5	157	1.25	30.94	**BG20-../DSE08LA4**	20	4000	-
0.75	42.5	168	1.2	33.33	**BG20-../DSE08LA4**	20	4100	-
0.75	38	188	1.05	37.02	**BG20-../DSE08LA4**	20	4300	-
0.75	34	210	0.95	41.76	**BG20-../DSE08LA4**	20	4500	-

The torques marked (*) are maximum permissible torques for service factor f_B=1.0.

0.75 kW

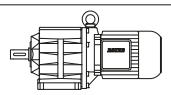

P_N	50 Hz			i	Type	m	F_{RN}	F_{RV}
	n_2	M_2	f_B					
[kW]	[1/min]	[Nm]	[—]	[:1]		[kg]	[N]	[N]
0.75	30.5	230	0.87	46.38	**BG20-../DSE08LA4**	20	4700	-
0.75	29.5	240	0.83	47.92	**BG20-../DSE08LA4**	20	4750	-
0.75	74	96	3.1	18.93	**BG30-../DSE08LA4**	25	4100	-
0.75	71	100	3.0	19.99	**BG30-../DSE08LA4**	25	4200	-
0.75	64	111	2.7	22.18	**BG30-../DSE08LA4**	25	4600	-
0.75	56	127	2.4	25.45	**BG30-../DSE08LA4**	25	4850	-
0.75	50	143	2.1	28.24	**BG30-../DSE08LA4**	25	5100	-
0.75	47	152	1.95	29.83	**BG30-../DSE08LA4**	25	5200	-
0.75	42.5	168	1.8	33.09	**BG30-../DSE08LA4**	25	5400	-
0.75	40	179	1.7	35.17	**BG30-../DSE08LA4**	25	5500	-
0.75	36	198	1.5	39.02	**BG30-../DSE08LA4**	25	5800	-
0.75	33	215	1.4	42.46	**BG30-../DSE08LA4**	25	5900	-
0.75	30	235	1.3	47.11	**BG30-../DSE08LA4**	25	6000	-
0.75	27	265	1.15	52.44	**BG30-../DSE08LA4**	25	6000	-
0.75	24.5	290	1.05	58.18	**BG30-../DSE08LA4**	25	6000	-
0.75	23.5	300	1.0	60.79	**BG30-../DSE08LA4**	25	6000	-
0.75	21	340	0.88	67.44	**BG30-../DSE08LA4**	25	6000	-
0.75	19.5	365	0.82	73.51	**BG30Z-../DSE08LA4**	28	6000	-
0.75	54	132	3.2	26.01	**BG40-../DSE08LA4**	40	6500	-
0.75	48	149	2.9	29.34	**BG40-../DSE08LA4**	40	6800	-
0.75	43	166	2.6	32.57	**BG40-../DSE08LA4**	40	7000	-
0.75	41	174	2.4	34.20	**BG40-../DSE08LA4**	40	7000	-
0.75	37	193	2.2	37.96	**BG40-../DSE08LA4**	40	7000	-
0.75	35	200	2.1	40.19	**BG40-../DSE08LA4**	40	7000	-
0.75	31.5	225	1.9	44.62	**BG40-../DSE08LA4**	40	7000	-
0.75	29	245	1.75	48.36	**BG40-../DSE08LA4**	40	7000	-
0.75	26.5	270	1.55	53.69	**BG40-../DSE08LA4**	40	7000	-
0.75	23.5	300	1.4	59.64	**BG40-../DSE08LA4**	40	7000	-
0.75	21.5	330	1.3	66.20	**BG40-../DSE08LA4**	40	7000	-
0.75	21	340	1.25	67.74	**BG40Z-../DSE08LA4**	43	7000	-
0.75	19	375	1.15	75.19	**BG40Z-../DSE08LA4**	43	7000	-
0.75	17.5	405	1.05	82.00	**BG40Z-../DSE08LA4**	43	7000	-
0.75	15.5	460	0.92	91.02	**BG40Z-../DSE08LA4**	43	7000	-
0.75	14.5	490	0.87	96.86	**BG40Z-../DSE08LA4**	43	7000	-
0.75	13.5	530	0.8	107.5	**BG40Z-../DSE08LA4**	43	7000	-
0.75	37	193	3.3	37.89	**BG50-../DSE08LA4**	48	10000	-
0.75	33.5	210	3.0	42.00	**BG50-../DSE08LA4**	48	10000	-
0.75	30	235	2.7	47.02	**BG50-../DSE08LA4**	48	10000	-
0.75	27	265	2.4	52.12	**BG50-../DSE08LA4**	48	10000	-
0.75	24	295	2.1	59.42	**BG50-../DSE08LA4**	48	10000	-
0.75	21.5	330	1.9	65.86	**BG50-../DSE08LA4**	48	10000	-
0.75	19.5	365	1.75	71.97	**BG50Z-../DSE08LA4**	52	10000	-
0.75	18	395	1.6	79.78	**BG50Z-../DSE08LA4**	52	10000	-
0.75	15	475	1.35	95.58	**BG50Z-../DSE08LA4**	52	10000	-
0.75	13.5	530	1.2	106.0	**BG50Z-../DSE08LA4**	52	10000	-
0.75	11	650	0.97	128.9	**BG50Z-../DSE08LA4**	52	10000	-
0.75	9.8	730	0.86	142.9	**BG50Z-../DSE08LA4**	52	10000	-
0.75	18.5	385	3.1	75.71	**BG60Z-../DSE08LA4**	97	16000	-
0.75	15.5	460	2.6	91.09	**BG60Z-../DSE08LA4**	97	16000	-
0.75	14	510	2.4	101.0	**BG60Z-../DSE08LA4**	97	16000	-
0.75	12	590	2.0	119.2	**BG60Z-../DSE08LA4**	97	16000	-
0.75	11	650	1.85	132.1	**BG60Z-../DSE08LA4**	97	16000	-
0.75	8.9	800	1.5	158.0	**BG60Z-../DSE08LA4**	97	16000	-
0.75	8.0	890	1.35	175.1	**BG60Z-../DSE08LA4**	97	16000	-
0.75	6.9	1030	1.15	204.6	**BG60Z-../DSE08LA4**	97	16000	-
0.75	6.2	1150	1.05	226.7	**BG60Z-../DSE08LA4**	97	16000	-
0.75	5.7	1250	0.96	247.7	**BG60Z-../DSE08LA4**	97	16000	-
0.75	5.2	1370	0.88	274.5	**BG60Z-../DSE08LA4**	97	16000	-
0.75	5.1	1280	1.0	276.2	**BG60G20-../DSE08LA4**	105	16000	-
0.75	4.6	1420	0.92	306.1	**BG60G20-../DSE08LA4**	105	16000	-
0.75	4.2	1560	0.83	334.3	**BG60G20-../DSE08LA4**	105	16000	-
0.75	9.6	740	3.1	147.2	**BG70Z-../DSE08LA4**	137	20000	-
0.75	8.6	830	2.8	163.8	**BG70Z-../DSE08LA4**	137	20000	-
0.75	7.3	980	2.3	194.4	**BG70Z-../DSE08LA4**	137	20000	-
0.75	6.7	1060	2.2	210.5	**BG70Z-../DSE08LA4**	137	20000	-

The torques marked (*) are maximum permissible torques for service factor f_B=1.0.

0.75 kW

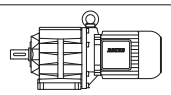

P_N	50 Hz			i	Type	m	F_{RN}	F_{RV}
	n_2	M_2	f_B					
[kW]	[1/min]	[Nm]	[—]	[:1]		[kg]	[N]	[N]
0.75	5.7	1250	1.85	249.8	**BG70Z-../DSE08LA4**	137	20000	-
0.75	5.5	1190	2.1	255.5	**BG70G20-../DSE08LA4**	135	20000	-
0.75	5.1	1280	1.95	276.7	**BG70G20-../DSE08LA4**	135	20000	-
0.75	4.3	1520	1.65	328.4	**BG70G20-../DSE08LA4**	135	20000	-
0.75	3.7	1780	1.4	387.6	**BG70G20-../DSE08LA4**	135	20000	-
0.75	3.4	1980	1.25	417.8	**BG70G20-../DSE08LA4**	135	20000	-
0.75	2.9	2300	1.1	495.9	**BG70G20-../DSE08LA4**	135	20000	-
0.75	2.5	2700	0.93	577.3	**BG70G20-../DSE08LA4**	135	20000	-
0.75	2.2	3050	0.82	665.8	**BG70G20-../DSE08LA4**	135	20000	-
0.75	3.9	1490	3.1	360.0	**BG80G40-../DSE08LA4**	216	26000	-
0.75	3.6	1610	2.9	399.8	**BG80G40-../DSE08LA4**	216	26000	-
0.75	3.3	1830	2.5	436.2	**BG80G40-../DSE08LA4**	216	26000	-
0.75	2.9	2050	2.2	484.3	**BG80G40-../DSE08LA4**	216	26000	-
0.75	2.5	2450	1.9	572.0	**BG80G40-../DSE08LA4**	216	26000	-
0.75	2.2	2750	1.65	657.8	**BG80G40-../DSE08LA4**	216	26000	-
0.75	2.0	3050	1.5	730.3	**BG80G40-../DSE08LA4**	216	26000	-
0.75	1.8	3450	1.35	817.4	**BG80G40-../DSE08LA4**	216	26000	-
0.75	1.6	3900	1.2	907.6	**BG80G40-../DSE08LA4**	216	26000	-
0.75	1.4	4550	1.0	1042	**BG80G40-../DSE08LA4**	216	26000	-
0.75	1.2	5400	0.85	1261	**BG80G40-../DSE08LA4**	216	26000	-
0.75	2.0	2900	3.2	714.2	**BG90G50-../DSE08LA4**	326	65000	-
0.75	1.6	3800	2.4	883.7	**BG90G50-../DSE08LA4**	326	65000	-
0.75	1.2	5200	1.75	1174	**BG90G50-../DSE08LA4**	326	65000	-
0.75	1.1	5800	1.6	1301	**BG90G50-../DSE08LA4**	326	65000	-
0.75	0.9	7200	1.3	1583	**BG90G50-../DSE08LA4**	326	65000	-
0.75	0.8	8200	1.1	1756	**BG90G50-../DSE08LA4**	326	65000	-
0.75	1.0	5700	3.2	1444	**BG100G50-../DSE08LA4**	513	90000	-
0.75	0.85	6800	2.7	1678	**BG100G50-../DSE08LA4**	513	90000	-
0.75	0.75	7700	2.4	1867	**BG100G50-../DSE08LA4**	513	90000	-
0.75	0.65	8900	2.1	2154	**BG100G50-../DSE08LA4**	513	90000	-
0.75	0.55	10600	1.75	2656	**BG100G50-../DSE08LA4**	513	90000	-
0.75	0.48	12600	1.45	2952	**BG100G50-../DSE08LA4**	513	90000	-
0.75	0.43	14100	1.3	3286	**BG100G50-../DSE08LA4**	513	90000	-
0.75	0.39	15800	1.15	3644	**BG100G50-../DSE08LA4**	513	90000	-

1.1 kW

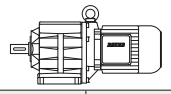

P_N	50 Hz			i	Type	m	F_{RN}	F_{RV}
	n_2	M_2	f_B					
[kW]	[1/min]	[Nm]	[—]	[:1]		[kg]	[N]	[N]
1.1	500	21	0.86	2.82	**BG06-../DSE08XA4**	19	470	-
1.1	560	18.7	3.0	2.52	**BG10-../DSE08XA4**	19	570	790
1.1	410	25.5	2.4	3.42	**BG10-../DSE08XA4**	19	630	880
1.1	325	32	2.1	4.36	**BG10-../DSE08XA4**	19	650	910
1.1	265	39.5	1.9	5.34	**BG10-../DSE08XA4**	19	620	910
1.1	210	50	1.6	6.78	**BG10-../DSE08XA4**	19	660	920
1.1	205	51	1.75	6.89	**BG10-../DSE08XA4**	19	850	1200
1.1	184	57	1.55	7.63	**BG10-../DSE08XA4**	19	900	1250
1.1	174	60	1.45	8.07	**BG10-../DSE08XA4**	19	660	920
1.1	151	69	1.4	9.33	**BG10-../DSE08XA4**	19	950	1330
1.1	136	77	1.3	10.34	**BG10-../DSE08XA4**	19	1000	1400
1.1	118	89	1.2	11.92	**BG10-../DSE08XA4**	19	1030	1440
1.1	106	99	1.1	13.21	**BG10-../DSE08XA4**	19	1070	1490
1.1	97	108	1.05	14.58	**BG10-../DSE08XA4**	19	1100	1540
1.1	87	120	0.98	16.15	**BG10-../DSE08XA4**	19	1140	1590
1.1	76	138	0.87	18.51	**BG10-../DSE08XA4**	19	1210	1690
1.1	320	32.5	3.2	4.38	**BG20-../DSE08XA4**	22	1990	-
1.1	260	40	2.9	5.49	**BG20-../DSE08XA4**	22	2100	-
1.1	235	44.5	2.8	6.06	**BG20-../DSE08XA4**	22	2250	-
1.1	220	47.5	2.6	6.48	**BG20-../DSE08XA4**	22	2250	-
1.1	210	50	2.6	6.73	**BG20-../DSE08XA4**	22	2350	2100
1.1	175	60	2.3	8.02	**BG20-../DSE08XA4**	22	2500	-

The torques marked (*) are maximum permissible torques for service factor f_B=1.0.

1.1 kW

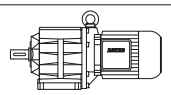

P_N	50 Hz			i	Type	m	F_{RN}	F_{RV}
	n_2	M_2	f_B					
[kW]	[1/min]	[Nm]	[—]	[:1]		[kg]	[N]	[N]
1.1	169	62	1.95	8.29	**BG20-../DSE08XA4**	22	2250	-
1.1	158	66	2.2	8.91	**BG20-../DSE08XA4**	22	2600	-
1.1	146	71	1.7	9.65	**BG20-../DSE08XA4**	22	2250	-
1.1	133	78	1.95	10.54	**BG20-../DSE08XA4**	22	2700	-
1.1	120	87	1.8	11.71	**BG20-../DSE08XA4**	22	2800	-
1.1	106	99	1.7	13.21	**BG20-../DSE08XA4**	22	2900	-
1.1	96	109	1.6	14.67	**BG20-../DSE08XA4**	22	3050	-
1.1	90	116	1.55	15.58	**BG20-../DSE08XA4**	22	3100	-
1.1	81	129	1.4	17.31	**BG20-../DSE08XA4**	22	3200	-
1.1	71	147	1.35	19.95	**BG20-../DSE08XA4**	22	3350	-
1.1	64	164	1.2	22.16	**BG20-../DSE08XA4**	22	3500	-
1.1	61	172	1.15	23.22	**BG20-../DSE08XA4**	22	3550	-
1.1	55	191	1.05	25.79	**BG20-../DSE08XA4**	22	3700	-
1.1	51	205	0.98	27.85	**BG20-../DSE08XA4**	22	3800	-
1.1	45.5	230	0.87	30.94	**BG20-../DSE08XA4**	22	4000	-
1.1	42.5	245	0.82	33.33	**BG20-../DSE08XA4**	22	4100	-
1.1	119	88	3.1	11.82	**BG30-../DSE08XA4**	26	3200	-
1.1	102	102	2.9	13.77	**BG30-../DSE08XA4**	26	3150	-
1.1	92	114	2.6	15.27	**BG30-../DSE08XA4**	26	3450	-
1.1	83	126	2.4	17.06	**BG30-../DSE08XA4**	26	3700	-
1.1	74	141	2.1	18.93	**BG30-../DSE08XA4**	26	4100	-
1.1	71	147	2.0	19.99	**BG30-../DSE08XA4**	26	4200	-
1.1	64	164	1.85	22.18	**BG30-../DSE08XA4**	26	4600	-
1.1	56	187	1.6	25.45	**BG30-../DSE08XA4**	26	4850	-
1.1	50	210	1.45	28.24	**BG30-../DSE08XA4**	26	5100	-
1.1	47	220	1.35	29.83	**BG30-../DSE08XA4**	26	5200	-
1.1	42.5	245	1.2	33.09	**BG30-../DSE08XA4**	26	5400	-
1.1	40	260	1.15	35.17	**BG30-../DSE08XA4**	26	5500	-
1.1	36	290	1.05	39.02	**BG30-../DSE08XA4**	26	5800	-
1.1	33	315	0.95	42.46	**BG30-../DSE08XA4**	26	5900	-
1.1	30	350	0.86	47.11	**BG30-../DSE08XA4**	26	6000	-
1.1	77	136	3.1	18.19	**BG40-../DSE08XA4**	41	5600	-
1.1	71	147	2.9	19.84	**BG40-../DSE08XA4**	41	5800	-
1.1	64	164	2.6	22.02	**BG40-../DSE08XA4**	41	6000	-
1.1	60	175	2.4	23.43	**BG40-../DSE08XA4**	41	6200	-
1.1	54	194	2.2	26.01	**BG40-../DSE08XA4**	41	6500	-
1.1	48	215	2.0	29.34	**BG40-../DSE08XA4**	41	6800	-
1.1	43	240	1.75	32.57	**BG40-../DSE08XA4**	41	7000	-
1.1	41	255	1.65	34.20	**BG40-../DSE08XA4**	41	7000	-
1.1	37	280	1.5	37.96	**BG40-../DSE08XA4**	41	7000	-
1.1	35	300	1.4	40.19	**BG40-../DSE08XA4**	41	7000	-
1.1	31.5	330	1.3	44.62	**BG40-../DSE08XA4**	41	7000	-
1.1	29	360	1.2	48.36	**BG40-../DSE08XA4**	41	7000	-
1.1	26.5	395	1.1	53.69	**BG40-../DSE08XA4**	41	7000	-
1.1	23.5	445	0.96	59.64	**BG40-../DSE08XA4**	41	7000	-
1.1	21.5	485	0.88	66.20	**BG40-../DSE08XA4**	41	7000	-
1.1	21	500	0.85	67.74	**BG40Z-../DSE08XA4**	44	7000	-
1.1	47.5	220	2.9	29.62	**BG50-../DSE08XA4**	48	8000	-
1.1	43	240	2.6	32.84	**BG50-../DSE08XA4**	48	8700	-
1.1	37	280	2.3	37.89	**BG50-../DSE08XA4**	48	10000	-
1.1	33.5	310	2.0	42.00	**BG50-../DSE08XA4**	48	10000	-
1.1	30	350	1.8	47.02	**BG50-../DSE08XA4**	48	10000	-
1.1	27	385	1.65	52.12	**BG50-../DSE08XA4**	48	10000	-
1.1	24	435	1.45	59.42	**BG50-../DSE08XA4**	48	10000	-
1.1	21.5	485	1.3	65.86	**BG50-../DSE08XA4**	48	10000	-
1.1	19.5	530	1.2	71.97	**BG50Z-../DSE08XA4**	53	10000	-
1.1	18	580	1.1	79.78	**BG50Z-../DSE08XA4**	53	10000	-
1.1	15	700	0.9	95.58	**BG50Z-../DSE08XA4**	53	10000	-
1.1	13.5	770	0.82	106.0	**BG50Z-../DSE08XA4**	53	10000	-
1.1	20.5	510	2.4	68.32	**BG60Z-../DSE08XA4**	98	16000	-
1.1	18.5	560	2.1	75.71	**BG60Z-../DSE08XA4**	98	16000	-
1.1	15.5	670	1.8	91.09	**BG60Z-../DSE08XA4**	98	16000	-
1.1	14	750	1.6	101.0	**BG60Z-../DSE08XA4**	98	16000	-
1.1	12	870	1.4	119.2	**BG60Z-../DSE08XA4**	98	16000	-
1.1	11	950	1.25	132.1	**BG60Z-../DSE08XA4**	98	16000	-
1.1	8.9	1180	1.0	158.0	**BG60Z-../DSE08XA4**	98	16000	-

The torques marked (*) are maximum permissible torques for service factor f_B=1.0.

1.1 kW

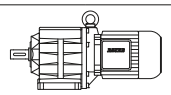

P_N	50 Hz			i	Type	m	F_{RN}	F_{RV}
	n_2	M_2	f_B					
[kW]	[1/min]	[Nm]	[—]	[:1]		[kg]	[N]	[N]
1.1	8.0	1310	0.92	175.1	**BG60Z-../DSE08XA4**	98	16000	-
1.1	15	700	3.3	95.74	**BG70Z-../DSE08XA4**	138	20000	-
1.1	12.5	840	2.7	113.6	**BG70Z-../DSE08XA4**	138	20000	-
1.1	11.5	910	2.5	124.0	**BG70Z-../DSE08XA4**	138	20000	-
1.1	9.6	1090	2.1	147.2	**BG70Z-../DSE08XA4**	138	20000	-
1.1	8.6	1220	1.9	163.8	**BG70Z-../DSE08XA4**	138	20000	-
1.1	7.3	1430	1.6	194.4	**BG70Z-../DSE08XA4**	138	20000	-
1.1	6.7	1560	1.45	210.5	**BG70Z-../DSE08XA4**	138	20000	-
1.1	5.7	1840	1.25	249.8	**BG70Z-../DSE08XA4**	138	20000	-
1.1	5.5	1800	1.4	255.5	**BG70G20-../DSE08XA4**	136	20000	-
1.1	5.1	1940	1.3	276.7	**BG70G20-../DSE08XA4**	136	20000	-
1.1	4.3	2300	1.1	328.4	**BG70G20-../DSE08XA4**	136	20000	-
1.1	3.7	2650	0.94	387.6	**BG70G20-../DSE08XA4**	136	20000	-
1.1	3.4	2950	0.85	417.8	**BG70G20-../DSE08XA4**	136	20000	-
1.1	6.2	1410	3.3	227.2	**BG80G40-../DSE08XA4**	217	26000	-
1.1	5.6	1560	2.9	252.3	**BG80G40-../DSE08XA4**	217	26000	-
1.1	5.0	1790	2.6	282.8	**BG80G40-../DSE08XA4**	217	26000	-
1.1	4.5	1990	2.3	314.0	**BG80G40-../DSE08XA4**	217	26000	-
1.1	3.9	2350	1.95	360.0	**BG80G40-../DSE08XA4**	217	26000	-
1.1	3.6	2500	1.85	399.8	**BG80G40-../DSE08XA4**	217	26000	-
1.1	3.3	2800	1.65	436.2	**BG80G40-../DSE08XA4**	217	26000	-
1.1	2.9	3200	1.45	484.3	**BG80G40-../DSE08XA4**	217	26000	-
1.1	2.5	3800	1.2	572.0	**BG80G40-../DSE08XA4**	217	26000	-
1.1	2.2	4250	1.1	657.8	**BG80G40-../DSE08XA4**	217	26000	-
1.1	2.0	4750	0.97	730.3	**BG80G40-../DSE08XA4**	217	26000	-
1.1	1.8	5300	0.87	817.4	**BG80G40-../DSE08XA4**	217	26000	-
1.1	3.3	2750	3.3	435.8	**BG90G50-../DSE08XA4**	327	65000	-
1.1	2.8	3250	2.8	504.7	**BG90G50-../DSE08XA4**	327	65000	-
1.1	2.4	3800	2.4	588.8	**BG90G50-../DSE08XA4**	327	65000	-
1.1	2.2	4150	2.2	644.7	**BG90G50-../DSE08XA4**	327	65000	-
1.1	2.0	4600	2.0	714.2	**BG90G50-../DSE08XA4**	327	65000	-
1.1	1.6	5800	1.6	883.7	**BG90G50-../DSE08XA4**	327	65000	-
1.1	1.2	8000	1.15	1174	**BG90G50-../DSE08XA4**	327	65000	-
1.1	1.1	8800	1.05	1301	**BG90G50-../DSE08XA4**	327	65000	-
1.1	1.4	6100	3.0	1043	**BG100G50-../DSE08XA4**	514	90000	-
1.1	1.2	7100	2.6	1204	**BG100G50-../DSE08XA4**	514	90000	-
1.1	1.0	9100	2.0	1444	**BG100G50-../DSE08XA4**	514	90000	-
1.1	0.85	10700	1.75	1678	**BG100G50-../DSE08XA4**	514	90000	-
1.1	0.75	12200	1.5	1867	**BG100G50-../DSE08XA4**	514	90000	-
1.1	0.65	14100	1.3	2154	**BG100G50-../DSE08XA4**	514	90000	-
1.1	0.55	16700	1.1	2656	**BG100G50-../DSE08XA4**	514	90000	-

1.5 kW

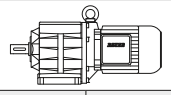

P_N	50 Hz			i	Type	m	F_{RN}	F_{RV}
	n_2	M_2	f_B					
[kW]	[1/min]	[Nm]	[—]	[:1]		[kg]	[N]	[N]
1.5	570	25	2.2	2.52	**BG10-../DSE09LA4**	26	570	790
1.5	420	34	1.8	3.42	**BG10-../DSE09LA4**	26	630	880
1.5	330	43	1.6	4.36	**BG10-../DSE09LA4**	26	650	910
1.5	270	53	1.4	5.34	**BG10-../DSE09LA4**	26	620	910
1.5	210	68	1.3	6.89	**BG10-../DSE09LA4**	26	850	1200
1.5	187	76	1.15	7.63	**BG10-../DSE09LA4**	26	900	1250
1.5	176	81	1.1	8.07	**BG10-../DSE09LA4**	26	660	920
1.5	153	93	1.05	9.33	**BG10-../DSE09LA4**	26	950	1330
1.5	138	103	0.96	10.34	**BG10-../DSE09LA4**	26	1000	1400
1.5	120	119	0.88	11.92	**BG10-../DSE09LA4**	26	1030	1440
1.5	108	132	0.83	13.21	**BG10-../DSE09LA4**	26	1070	1490
1.5	430	33	2.8	3.33	**BG20-../DSE09LA4**	28	1830	-
1.5	325	44	2.4	4.38	**BG20-../DSE09LA4**	28	1990	-
1.5	260	55	2.1	5.49	**BG20-../DSE09LA4**	28	2100	-
1.5	235	60	2.1	6.06	**BG20-../DSE09LA4**	28	2250	-

The torques marked (*) are maximum permissible torques for service factor f_B=1.0.

1.5 kW

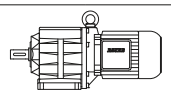

P_N	50 Hz			i	Type	m	F_{RN}	F_{RV}
	n_2	M_2	f_B					
[kW]	[1/min]	[Nm]	[—]	[:1]		[kg]	[N]	[N]
1.5	220	65	1.9	6.48	**BG20-../DSE09LA4**	28	2250	-
1.5	215	66	1.95	6.73	**BG20-../DSE09LA4**	28	2350	2100
1.5	178	80	1.7	8.02	**BG20-../DSE09LA4**	28	2500	-
1.5	172	83	1.45	8.29	**BG20-../DSE09LA4**	28	2250	-
1.5	160	89	1.6	8.91	**BG20-../DSE09LA4**	28	2600	-
1.5	148	96	1.25	9.65	**BG20-../DSE09LA4**	28	2250	-
1.5	135	106	1.45	10.54	**BG20-../DSE09LA4**	28	2700	-
1.5	122	117	1.35	11.71	**BG20-../DSE09LA4**	28	2800	-
1.5	108	132	1.25	13.21	**BG20-../DSE09LA4**	28	2900	-
1.5	97	147	1.15	14.67	**BG20-../DSE09LA4**	28	3050	-
1.5	92	155	1.15	15.58	**BG20-../DSE09LA4**	28	3100	-
1.5	83	172	1.05	17.31	**BG20-../DSE09LA4**	28	3200	-
1.5	72	198	0.98	19.95	**BG20-../DSE09LA4**	28	3350	-
1.5	65	220	0.91	22.16	**BG20-../DSE09LA4**	28	3500	-
1.5	62	230	0.87	23.22	**BG20-../DSE09LA4**	28	3550	-
1.5	215	66	3.3	6.75	**BG30-../DSE09LA4**	33	1760	-
1.5	190	75	3.1	7.50	**BG30-../DSE09LA4**	33	2750	-
1.5	180	79	2.7	7.91	**BG30-../DSE09LA4**	33	1760	-
1.5	166	86	2.9	8.60	**BG30-../DSE09LA4**	33	2800	-
1.5	149	96	2.6	9.55	**BG30-../DSE09LA4**	33	3000	-
1.5	134	106	2.5	10.65	**BG30-../DSE09LA4**	33	2950	-
1.5	121	118	2.3	11.82	**BG30-../DSE09LA4**	33	3200	-
1.5	104	137	2.1	13.77	**BG30-../DSE09LA4**	33	3150	-
1.5	93	154	1.95	15.27	**BG30-../DSE09LA4**	33	3450	-
1.5	84	170	1.75	17.06	**BG30-../DSE09LA4**	33	3700	-
1.5	76	188	1.6	18.93	**BG30-../DSE09LA4**	33	4100	-
1.5	72	198	1.5	19.99	**BG30-../DSE09LA4**	33	4200	-
1.5	65	220	1.35	22.18	**BG30-../DSE09LA4**	33	4600	-
1.5	56	255	1.2	25.45	**BG30-../DSE09LA4**	33	4850	-
1.5	51	280	1.05	28.24	**BG30-../DSE09LA4**	33	5100	-
1.5	48	295	1.0	29.83	**BG30-../DSE09LA4**	33	5200	-
1.5	43	330	0.91	33.09	**BG30-../DSE09LA4**	33	5400	-
1.5	40.5	350	0.86	35.17	**BG30-../DSE09LA4**	33	5500	-
1.5	158	90	3.3	9.00	**BG40-../DSE09LA4**	47	2650	-
1.5	111	129	3.2	12.86	**BG40-../DSE09LA4**	47	4500	-
1.5	100	143	2.9	14.28	**BG40-../DSE09LA4**	47	4900	-
1.5	87	164	2.6	16.39	**BG40-../DSE09LA4**	47	5300	-
1.5	79	181	2.3	18.19	**BG40-../DSE09LA4**	47	5600	-
1.5	72	198	2.1	19.84	**BG40-../DSE09LA4**	47	5800	-
1.5	65	220	1.95	22.02	**BG40-../DSE09LA4**	47	6000	-
1.5	61	230	1.85	23.43	**BG40-../DSE09LA4**	47	6200	-
1.5	55	260	1.65	26.01	**BG40-../DSE09LA4**	47	6500	-
1.5	48.5	295	1.45	29.34	**BG40-../DSE09LA4**	47	6800	-
1.5	44	325	1.3	32.57	**BG40-../DSE09LA4**	47	7000	-
1.5	42	340	1.25	34.20	**BG40-../DSE09LA4**	47	7000	-
1.5	37.5	380	1.1	37.96	**BG40-../DSE09LA4**	47	7000	-
1.5	35.5	400	1.05	40.19	**BG40-../DSE09LA4**	47	7000	-
1.5	32	445	0.96	44.62	**BG40-../DSE09LA4**	47	7000	-
1.5	29.5	485	0.88	48.36	**BG40-../DSE09LA4**	47	7000	-
1.5	65	220	2.9	21.96	**BG50-../DSE09LA4**	55	8000	-
1.5	59	240	2.6	24.34	**BG50-../DSE09LA4**	55	8700	-
1.5	48	295	2.1	29.62	**BG50-../DSE09LA4**	55	8000	-
1.5	43.5	325	1.95	32.84	**BG50-../DSE09LA4**	55	8700	-
1.5	37.5	380	1.65	37.89	**BG50-../DSE09LA4**	55	10000	-
1.5	34	420	1.5	42.00	**BG50-../DSE09LA4**	55	10000	-
1.5	30.5	465	1.35	47.02	**BG50-../DSE09LA4**	55	10000	-
1.5	27.5	520	1.2	52.12	**BG50-../DSE09LA4**	55	10000	-
1.5	24	590	1.05	59.42	**BG50-../DSE09LA4**	55	10000	-
1.5	22	650	0.97	65.86	**BG50-../DSE09LA4**	55	10000	-
1.5	20	710	0.89	71.97	**BG50Z-../DSE09LA4**	60	10000	-
1.5	18	790	0.8	79.78	**BG50Z-../DSE09LA4**	60	10000	-
1.5	37	385	3.1	38.85	**BG60-../DSE09LA4**	86	16000	-
1.5	33	430	2.8	43.05	**BG60-../DSE09LA4**	86	16000	-
1.5	28.5	500	2.4	50.31	**BG60-../DSE09LA4**	86	16000	-
1.5	25.5	560	2.1	55.76	**BG60-../DSE09LA4**	86	16000	-
1.5	23.5	600	2.0	60.90	**BG60-../DSE09LA4**	86	16000	-

The torques marked (*) are maximum permissible torques for service factor f_B=1.0.

1.5 kW

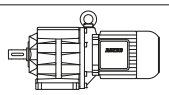

P_N	50 Hz			i	Type	m	F_{RN}	F_{RV}
	n_2	M_2	f_B					
[kW]	[1/min]	[Nm]	[—]	[:1]		[kg]	[N]	[N]
1.5	21.5	660	1.8	67.49	**BG60-../DSE09LA4**	86	16000	-
1.5	21	680	1.75	68.32	**BG60Z-../DSE09LA4**	105	16000	-
1.5	19	750	1.6	75.71	**BG60Z-../DSE09LA4**	105	16000	-
1.5	16	890	1.35	91.09	**BG60Z-../DSE09LA4**	105	16000	-
1.5	14.5	980	1.2	101.0	**BG60Z-../DSE09LA4**	105	16000	-
1.5	12	1190	1.0	119.2	**BG60Z-../DSE09LA4**	105	16000	-
1.5	11	1300	0.92	132.1	**BG60Z-../DSE09LA4**	105	16000	-
1.5	19.5	730	3.2	73.82	**BG70Z-../DSE09LA4**	145	20000	-
1.5	16.5	860	2.7	87.61	**BG70Z-../DSE09LA4**	145	20000	-
1.5	15	950	2.4	95.74	**BG70Z-../DSE09LA4**	145	20000	-
1.5	12.5	1140	2.0	113.6	**BG70Z-../DSE09LA4**	145	20000	-
1.5	11.5	1240	1.85	124.0	**BG70Z-../DSE09LA4**	145	20000	-
1.5	9.7	1470	1.55	147.2	**BG70Z-../DSE09LA4**	145	20000	-
1.5	8.7	1640	1.4	163.8	**BG70Z-../DSE09LA4**	145	20000	-
1.5	7.4	1930	1.2	194.4	**BG70Z-../DSE09LA4**	145	20000	-
1.5	6.8	2100	1.1	210.5	**BG70Z-../DSE09LA4**	145	20000	-
1.5	5.7	2500	0.92	249.8	**BG70Z-../DSE09LA4**	145	20000	-
1.5	5.6	2450	1.0	255.5	**BG70G20-../DSE09LA4**	142	20000	-
1.5	5.2	2600	0.96	276.7	**BG70G20-../DSE09LA4**	142	20000	-
1.5	4.4	3100	0.81	328.4	**BG70G20-../DSE09LA4**	142	20000	-
1.5	9.8	1460	2.9	145.4	**BG80Z-../DSE09LA4**	213	26000	-
1.5	8.8	1620	2.6	161.5	**BG80Z-../DSE09LA4**	213	26000	-
1.5	7.7	1860	2.3	186.8	**BG80Z-../DSE09LA4**	213	26000	-
1.5	6.9	2050	2.0	207.4	**BG80Z-../DSE09LA4**	213	26000	-
1.5	6.3	1990	2.3	227.2	**BG80G40-../DSE09LA4**	224	26000	-
1.5	5.7	2200	2.1	252.3	**BG80G40-../DSE09LA4**	224	26000	-
1.5	5.1	2500	1.85	282.8	**BG80G40-../DSE09LA4**	224	26000	-
1.5	4.6	2750	1.65	314.0	**BG80G40-../DSE09LA4**	224	26000	-
1.5	4.0	3200	1.45	360.0	**BG80G40-../DSE09LA4**	224	26000	-
1.5	3.6	3600	1.3	399.8	**BG80G40-../DSE09LA4**	224	26000	-
1.5	3.3	4000	1.15	436.2	**BG80G40-../DSE09LA4**	224	26000	-
1.5	3.0	4350	1.05	484.3	**BG80G40-../DSE09LA4**	224	26000	-
1.5	2.5	5300	0.87	572.0	**BG80G40-../DSE09LA4**	224	26000	-
1.5	4.0	3100	3.0	360.3	**BG90G50-../DSE09LA4**	334	65000	-
1.5	3.3	3950	2.3	435.8	**BG90G50-../DSE09LA4**	334	65000	-
1.5	2.9	4450	2.1	504.7	**BG90G50-../DSE09LA4**	334	65000	-
1.5	2.5	5100	1.8	588.8	**BG90G50-../DSE09LA4**	334	65000	-
1.5	2.3	5600	1.65	644.7	**BG90G50-../DSE09LA4**	334	65000	-
1.5	2.0	6500	1.4	714.2	**BG90G50-../DSE09LA4**	334	65000	-
1.5	1.7	7700	1.2	883.7	**BG90G50-../DSE09LA4**	334	65000	-
1.5	1.3	10300	0.89	1174	**BG90G50-../DSE09LA4**	334	65000	-
1.5	2.5	5700	3.2	591.1	**BG100Z-../DSE09LA4**	522	90000	-
1.5	2.2	6500	2.8	658.1	**BG100Z-../DSE09LA4**	522	90000	-
1.5	1.9	7500	2.5	759.0	**BG100Z-../DSE09LA4**	522	90000	-
1.5	1.7	8400	2.2	845.1	**BG100Z-../DSE09LA4**	522	90000	-
1.5	1.5	7900	2.3	976.1	**BG100G50-../DSE09LA4**	521	90000	-
1.5	1.4	8800	2.1	1043	**BG100G50-../DSE09LA4**	521	90000	-
1.5	1.2	10300	1.8	1204	**BG100G50-../DSE09LA4**	521	90000	-
1.5	1.0	12900	1.45	1444	**BG100G50-../DSE09LA4**	521	90000	-
1.5	0.85	15200	1.2	1678	**BG100G50-../DSE09LA4**	521	90000	-
1.5	0.8	16100	1.15	1867	**BG100G50-../DSE09LA4**	521	90000	-
1.5	0.7	18400	1.0	2154	**BG100G50-../DSE09LA4**	521	90000	-

2.2 kW

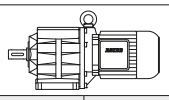

P_N	50 Hz			i	Type	m	F_{RN}	F_{RV}
	n_2	M_2	f_B					
[kW]	[1/min]	[Nm]	[—]	[:1]		[kg]	[N]	[N]
2.2	570	36.5	1.55	2.52	**BG10-../DSE09XA4**	30	570	790
2.2	420	50	1.25	3.42	**BG10-../DSE09XA4**	30	630	880
2.2	330	63	1.1	4.36	**BG10-../DSE09XA4**	30	650	910
2.2	270	77	0.97	5.34	**BG10-../DSE09XA4**	30	620	910
2.2	210	100	0.88	6.89	**BG10-../DSE09XA4**	30	850	1200

The torques marked (*) are maximum permissible torques for service factor f_B=1.0.

2.2 kW

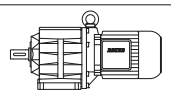

P_N	50 Hz			i	Type	m	F_{RN}	F_{RV}
	n_2	M_2	f_B					
[kW]	[1/min]	[Nm]	[—]	[:1]		[kg]	[N]	[N]
2.2	570	36.5	2.3	2.52	**BG20-../DSE09XA4**	32	1650	-
2.2	430	48.5	1.9	3.33	**BG20-../DSE09XA4**	32	1830	-
2.2	325	64	1.65	4.38	**BG20-../DSE09XA4**	32	1990	-
2.2	260	80	1.45	5.49	**BG20-../DSE09XA4**	32	2100	-
2.2	235	89	1.4	6.06	**BG20-../DSE09XA4**	32	2250	-
2.2	220	95	1.3	6.48	**BG20-../DSE09XA4**	32	2250	-
2.2	215	97	1.35	6.73	**BG20-../DSE09XA4**	32	2350	2100
2.2	178	118	1.15	8.02	**BG20-../DSE09XA4**	32	2500	-
2.2	172	122	1.0	8.29	**BG20-../DSE09XA4**	32	2250	-
2.2	160	131	1.1	8.91	**BG20-../DSE09XA4**	32	2600	-
2.2	148	141	0.87	9.65	**BG20-../DSE09XA4**	32	2250	-
2.2	135	155	0.99	10.54	**BG20-../DSE09XA4**	32	2700	-
2.2	122	172	0.92	11.71	**BG20-../DSE09XA4**	32	2800	-
2.2	108	194	0.86	13.21	**BG20-../DSE09XA4**	32	2900	-
2.2	97	215	0.8	14.67	**BG20-../DSE09XA4**	32	3050	-
2.2	540	38.5	3.3	2.67	**BG30-../DSE09XA4**	37	1450	-
2.2	420	50	2.8	3.40	**BG30-../DSE09XA4**	37	1580	-
2.2	340	61	2.8	4.21	**BG30-../DSE09XA4**	37	1630	-
2.2	265	79	2.5	5.44	**BG30-../DSE09XA4**	37	1670	-
2.2	215	97	2.3	6.76	**BG30-../DSE09XA4**	37	2550	-
2.2	190	110	2.1	7.50	**BG30-../DSE09XA4**	37	2750	-
2.2	180	116	1.85	7.91	**BG30-../DSE09XA4**	37	1760	-
2.2	166	126	1.95	8.60	**BG30-../DSE09XA4**	37	2800	-
2.2	149	141	1.8	9.55	**BG30-../DSE09XA4**	37	3000	-
2.2	134	156	1.7	10.65	**BG30-../DSE09XA4**	37	2950	-
2.2	121	173	1.6	11.82	**BG30-../DSE09XA4**	37	3200	-
2.2	104	200	1.45	13.77	**BG30-../DSE09XA4**	37	3150	-
2.2	93	225	1.35	15.27	**BG30-../DSE09XA4**	37	3450	-
2.2	84	250	1.2	17.06	**BG30-../DSE09XA4**	37	3700	-
2.2	76	275	1.1	18.93	**BG30-../DSE09XA4**	37	4100	-
2.2	72	290	1.05	19.99	**BG30-../DSE09XA4**	37	4200	-
2.2	65	320	0.94	22.18	**BG30-../DSE09XA4**	37	4600	-
2.2	56	375	0.8	25.45	**BG30-../DSE09XA4**	37	4850	-
2.2	230	91	3.2	6.29	**BG40-../DSE09XA4**	51	2600	-
2.2	200	105	3.1	7.11	**BG40-../DSE09XA4**	51	3950	-
2.2	187	112	2.6	7.62	**BG40-../DSE09XA4**	51	2650	-
2.2	171	122	2.8	8.31	**BG40-../DSE09XA4**	51	4100	-
2.2	158	132	2.2	9.00	**BG40-../DSE09XA4**	51	2650	-
2.2	154	136	2.6	9.23	**BG40-../DSE09XA4**	51	4350	-
2.2	138	152	2.5	10.35	**BG40-../DSE09XA4**	51	4350	-
2.2	124	169	2.3	11.49	**BG40-../DSE09XA4**	51	4600	-
2.2	111	189	2.2	12.86	**BG40-../DSE09XA4**	51	4500	-
2.2	100	210	2.0	14.28	**BG40-../DSE09XA4**	51	4900	-
2.2	87	240	1.75	16.39	**BG40-../DSE09XA4**	51	5300	-
2.2	79	265	1.6	18.19	**BG40-../DSE09XA4**	51	5600	-
2.2	72	290	1.45	19.84	**BG40-../DSE09XA4**	51	5800	-
2.2	65	320	1.35	22.02	**BG40-../DSE09XA4**	51	6000	-
2.2	61	340	1.25	23.43	**BG40-../DSE09XA4**	51	6200	-
2.2	55	380	1.1	26.01	**BG40-../DSE09XA4**	51	6500	-
2.2	48.5	430	0.99	29.34	**BG40-../DSE09XA4**	51	6800	-
2.2	44	475	0.89	32.57	**BG40-../DSE09XA4**	51	7000	-
2.2	42	500	0.85	34.20	**BG40-../DSE09XA4**	51	7000	-
2.2	118	178	3.2	12.06	**BG50-../DSE09XA4**	59	5700	-
2.2	107	196	3.0	13.36	**BG50-../DSE09XA4**	59	6100	-
2.2	86	240	2.6	16.53	**BG50-../DSE09XA4**	59	6500	-
2.2	78	265	2.4	18.33	**BG50-../DSE09XA4**	59	7200	-
2.2	65	320	1.95	21.96	**BG50-../DSE09XA4**	59	8000	-
2.2	59	355	1.75	24.34	**BG50-../DSE09XA4**	59	8700	-
2.2	48	435	1.45	29.62	**BG50-../DSE09XA4**	59	8000	-
2.2	43.5	480	1.3	32.84	**BG50-../DSE09XA4**	59	8700	-
2.2	37.5	560	1.15	37.89	**BG50-../DSE09XA4**	59	10000	-
2.2	34	610	1.05	42.00	**BG50-../DSE09XA4**	59	10000	-
2.2	30.5	680	0.93	47.02	**BG50-../DSE09XA4**	59	10000	-
2.2	27.5	760	0.83	52.12	**BG50-../DSE09XA4**	59	10000	-
2.2	58	360	3.3	24.82	**BG60-../DSE09XA4**	90	13800	-
2.2	48.5	430	2.8	29.31	**BG60-../DSE09XA4**	90	14800	-

The torques marked (*) are maximum permissible torques for service factor f_B=1.0.

2.2 kW

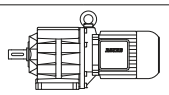

P_N	50 Hz			i	Type	m	F_{RN}	F_{RV}
	n_2	M_2	f_B					
[kW]	[1/min]	[Nm]	[—]	[:1]		[kg]	[N]	[N]
2.2	44	475	2.5	32.48	**BG60-../DSE09XA4**	90	15400	-
2.2	37	560	2.1	38.85	**BG60-../DSE09XA4**	90	16000	-
2.2	33	630	1.9	43.05	**BG60-../DSE09XA4**	90	16000	-
2.2	28.5	730	1.65	50.31	**BG60-../DSE09XA4**	90	16000	-
2.2	25.5	820	1.45	55.76	**BG60-../DSE09XA4**	90	16000	-
2.2	23.5	890	1.35	60.90	**BG60-../DSE09XA4**	90	16000	-
2.2	21.5	970	1.25	67.49	**BG60-../DSE09XA4**	90	16000	-
2.2	21	1000	1.2	68.32	**BG60Z-../DSE09XA4**	109	16000	-
2.2	19	1100	1.1	75.71	**BG60Z-../DSE09XA4**	109	16000	-
2.2	16	1310	0.92	91.09	**BG60Z-../DSE09XA4**	109	16000	-
2.2	14.5	1440	0.83	101.0	**BG60Z-../DSE09XA4**	109	16000	-
2.2	28.5	730	3.2	50.40	**BG70-../DSE09XA4**	128	20000	-
2.2	24	870	2.6	59.82	**BG70-../DSE09XA4**	128	20000	-
2.2	22	950	2.4	64.85	**BG70Z-../DSE09XA4**	149	20000	-
2.2	19.5	1070	2.1	73.82	**BG70Z-../DSE09XA4**	149	20000	-
2.2	16.5	1270	1.8	87.61	**BG70Z-../DSE09XA4**	149	20000	-
2.2	15	1400	1.65	95.74	**BG70Z-../DSE09XA4**	149	20000	-
2.2	12.5	1680	1.35	113.6	**BG70Z-../DSE09XA4**	149	20000	-
2.2	11.5	1820	1.25	124.0	**BG70Z-../DSE09XA4**	149	20000	-
2.2	9.7	2150	1.05	147.2	**BG70Z-../DSE09XA4**	149	20000	-
2.2	8.7	2400	0.96	163.8	**BG70Z-../DSE09XA4**	149	20000	-
2.2	7.4	2800	0.82	194.4	**BG70Z-../DSE09XA4**	149	20000	-
2.2	15.5	1350	3.1	93.89	**BG80Z-../DSE09XA4**	217	26000	-
2.2	13	1610	2.6	112.4	**BG80Z-../DSE09XA4**	217	26000	-
2.2	11.5	1820	2.3	124.8	**BG80Z-../DSE09XA4**	217	26000	-
2.2	9.8	2100	2.0	145.4	**BG80Z-../DSE09XA4**	217	26000	-
2.2	8.8	2350	1.8	161.5	**BG80Z-../DSE09XA4**	217	26000	-
2.2	7.7	2700	1.55	186.8	**BG80Z-../DSE09XA4**	217	26000	-
2.2	6.9	3000	1.4	207.4	**BG80Z-../DSE09XA4**	217	26000	-
2.2	6.3	3050	1.5	227.2	**BG80G40-../DSE09XA4**	228	26000	-
2.2	5.7	3350	1.35	252.3	**BG80G40-../DSE09XA4**	228	26000	-
2.2	5.1	3800	1.2	282.8	**BG80G40-../DSE09XA4**	228	26000	-
2.2	4.6	4200	1.1	314.0	**BG80G40-../DSE09XA4**	228	26000	-
2.2	4.0	4900	0.94	360.0	**BG80G40-../DSE09XA4**	228	26000	-
2.2	3.6	5400	0.85	399.8	**BG80G40-../DSE09XA4**	228	26000	-
2.2	8.0	2600	3.2	178.5	**BG90Z-../DSE09XA4**	327	65000	-
2.2	6.9	3000	2.8	208.3	**BG90Z-../DSE09XA4**	327	65000	-
2.2	6.3	3300	2.5	228.1	**BG90Z-../DSE09XA4**	327	65000	-
2.2	5.5	3350	2.7	262.5	**BG90G50-../DSE09XA4**	338	65000	-
2.2	4.8	4050	2.3	298.8	**BG90G50-../DSE09XA4**	338	65000	-
2.2	4.0	4750	1.95	360.3	**BG90G50-../DSE09XA4**	338	65000	-
2.2	3.3	5900	1.55	435.8	**BG90G50-../DSE09XA4**	338	65000	-
2.2	2.9	6700	1.35	504.7	**BG90G50-../DSE09XA4**	338	65000	-
2.2	2.5	7800	1.2	588.8	**BG90G50-../DSE09XA4**	338	65000	-
2.2	2.3	8500	1.1	644.7	**BG90G50-../DSE09XA4**	338	65000	-
2.2	2.0	9800	0.94	714.2	**BG90G50-../DSE09XA4**	338	65000	-
2.2	3.2	6500	2.8	456.7	**BG100Z-../DSE09XA4**	526	90000	-
2.2	2.8	7500	2.5	508.5	**BG100Z-../DSE09XA4**	526	90000	-
2.2	2.5	8400	2.2	591.1	**BG100Z-../DSE09XA4**	526	90000	-
2.2	2.2	9500	1.95	658.1	**BG100Z-../DSE09XA4**	526	90000	-
2.2	1.9	11000	1.7	759.0	**BG100Z-../DSE09XA4**	526	90000	-
2.2	1.7	12300	1.5	845.1	**BG100Z-../DSE09XA4**	526	90000	-
2.2	1.5	12400	1.5	976.1	**BG100G50-../DSE09XA4**	525	90000	-
2.2	1.4	13600	1.35	1043	**BG100G50-../DSE09XA4**	525	90000	-
2.2	1.2	15900	1.15	1204	**BG100G50-../DSE09XA4**	525	90000	-
2.2	1.0	19600	0.94	1444	**BG100G50-../DSE09XA4**	525	90000	-

3 kW

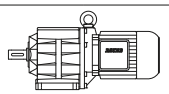

P_N	50 Hz			i	Type	m	F_{RN}	F_{RV}
	n_2	M_2	f_B					
[kW]	[1/min]	[Nm]	[—]	[:1]		[kg]	[N]	[N]
3	540	53	2.4	2.67	**BG30-../DSE11SA4**	46	1450	-

The torques marked (*) are maximum permissible torques for service factor f_B=1.0.

3 kW

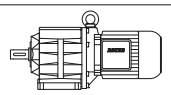

P_N	50 Hz			i	Type	m	F_{RN}	F_{RV}
	n_2	M_2	f_B					
[kW]	[1/min]	[Nm]	[—]	[:1]		[kg]	[N]	[N]
3	420	68	2.0	3.40	**BG30-../DSE11SA4**	46	1580	-
3	340	84	2.0	4.21	**BG30-../DSE11SA4**	46	1630	-
3	265	108	1.85	5.44	**BG30-../DSE11SA4**	46	1670	-
3	215	133	1.7	6.76	**BG30-../DSE11SA4**	46	2550	-
3	190	150	1.55	7.50	**BG30-../DSE11SA4**	46	2750	-
3	180	159	1.35	7.91	**BG30-../DSE11SA4**	46	1760	-
3	166	172	1.45	8.60	**BG30-../DSE11SA4**	46	2800	-
3	149	192	1.3	9.55	**BG30-../DSE11SA4**	46	3000	-
3	134	210	1.25	10.65	**BG30-../DSE11SA4**	46	2950	-
3	121	235	1.15	11.82	**BG30-../DSE11SA4**	46	3200	-
3	104	275	1.05	13.77	**BG30-../DSE11SA4**	46	3150	-
3	93	305	0.98	15.27	**BG30-../DSE11SA4**	46	3450	-
3	84	340	0.88	17.06	**BG30-../DSE11SA4**	46	3700	-
3	76	375	0.8	18.93	**BG30-../DSE11SA4**	46	4100	-
3	360	79	3.1	3.97	**BG40-../DSE11SA4**	65	2400	-
3	290	98	2.7	4.94	**BG40-../DSE11SA4**	65	2450	-
3	230	124	2.4	6.29	**BG40-../DSE11SA4**	65	2600	-
3	225	127	2.5	6.40	**BG40-../DSE11SA4**	65	3750	-
3	200	143	2.3	7.11	**BG40-../DSE11SA4**	65	3950	-
3	187	153	1.95	7.62	**BG40-../DSE11SA4**	65	2650	-
3	171	167	2.1	8.31	**BG40-../DSE11SA4**	65	4100	-
3	158	181	1.65	9.00	**BG40-../DSE11SA4**	65	2650	-
3	154	186	1.9	9.23	**BG40-../DSE11SA4**	65	4350	-
3	138	205	1.85	10.35	**BG40-../DSE11SA4**	65	4350	-
3	124	230	1.7	11.49	**BG40-../DSE11SA4**	65	4600	-
3	111	255	1.6	12.86	**BG40-../DSE11SA4**	65	4500	-
3	100	285	1.5	14.28	**BG40-../DSE11SA4**	65	4900	-
3	87	325	1.3	16.39	**BG40-../DSE11SA4**	65	5300	-
3	79	360	1.2	18.19	**BG40-../DSE11SA4**	65	5600	-
3	72	395	1.1	19.84	**BG40-../DSE11SA4**	65	5800	-
3	65	440	0.97	22.02	**BG40-../DSE11SA4**	65	6000	-
3	61	465	0.91	23.43	**BG40-../DSE11SA4**	65	6200	-
3	55	520	0.82	26.01	**BG40-../DSE11SA4**	65	6500	-
3	164	174	2.9	8.70	**BG50-../DSE11SA4**	75	5300	-
3	148	193	2.7	9.65	**BG50-../DSE11SA4**	75	5600	-
3	118	240	2.4	12.06	**BG50-../DSE11SA4**	75	5700	-
3	107	265	2.2	13.36	**BG50-../DSE11SA4**	75	6100	-
3	86	330	1.9	16.53	**BG50-../DSE11SA4**	75	6500	-
3	78	365	1.75	18.33	**BG50-../DSE11SA4**	75	7200	-
3	65	440	1.45	21.96	**BG50-../DSE11SA4**	75	8000	-
3	59	485	1.3	24.34	**BG50-../DSE11SA4**	75	8700	-
3	48	590	1.05	29.62	**BG50-../DSE11SA4**	75	8000	-
3	43.5	650	0.97	32.84	**BG50-../DSE11SA4**	75	8700	-
3	37.5	760	0.83	37.89	**BG50-../DSE11SA4**	75	10000	-
3	85	335	3.3	16.80	**BG60-../DSE11SA4**	107	12000	-
3	77	370	3.1	18.62	**BG60-../DSE11SA4**	107	12400	-
3	64	445	2.7	22.40	**BG60-../DSE11SA4**	107	13300	-
3	58	490	2.4	24.82	**BG60-../DSE11SA4**	107	13800	-
3	48.5	590	2.0	29.31	**BG60-../DSE11SA4**	107	14800	-
3	44	650	1.85	32.48	**BG60-../DSE11SA4**	107	15400	-
3	37	770	1.55	38.85	**BG60-../DSE11SA4**	107	16000	-
3	33	860	1.4	43.05	**BG60-../DSE11SA4**	107	16000	-
3	28.5	1000	1.2	50.31	**BG60-../DSE11SA4**	107	16000	-
3	25.5	1120	1.05	55.76	**BG60-../DSE11SA4**	107	16000	-
3	23.5	1210	0.99	60.90	**BG60-../DSE11SA4**	107	16000	-
3	21.5	1330	0.9	67.49	**BG60-../DSE11SA4**	107	16000	-
3	21	1360	0.88	68.32	**BG60Z-../DSE11SA4**	123	16000	-
3	19	1500	0.8	75.71	**BG60Z-../DSE11SA4**	123	16000	-
3	40.5	700	3.3	35.24	**BG70-../DSE11SA4**	138	18300	-
3	36.5	780	2.9	39.22	**BG70-../DSE11SA4**	138	19100	-
3	31	920	2.5	46.54	**BG70-../DSE11SA4**	138	20000	-
3	28.5	1000	2.3	50.40	**BG70-../DSE11SA4**	138	20000	-
3	24	1190	1.95	59.82	**BG70-../DSE11SA4**	138	20000	-
3	22	1300	1.75	64.85	**BG70Z-../DSE11SA4**	164	20000	-
3	19.5	1460	1.6	73.82	**BG70Z-../DSE11SA4**	164	20000	-
3	16.5	1730	1.35	87.61	**BG70Z-../DSE11SA4**	164	20000	-

The torques marked (*) are maximum permissible torques for service factor f_B=1.0.

3 kW

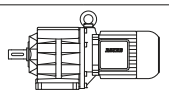

P_N	50 Hz			i	Type	m	F_{RN}	F_{RV}
	n_2	M_2	f_B					
[kW]	[1/min]	[Nm]	[—]	[:1]		[kg]	[N]	[N]
3	15	1910	1.2	95.74	**BG70Z-../DSE11SA4**	164	20000	-
3	12.5	2250	1.0	113.6	**BG70Z-../DSE11SA4**	164	20000	-
3	11.5	2450	0.94	124.0	**BG70Z-../DSE11SA4**	164	20000	-
3	22.5	1270	3.3	63.56	**BG80-../DSE11SA4**	192	26000	-
3	21.5	1330	3.2	66.40	**BG80Z-../DSE11SA4**	234	26000	-
3	19.5	1460	2.9	73.73	**BG80Z-../DSE11SA4**	234	26000	-
3	17	1680	2.5	84.55	**BG80Z-../DSE11SA4**	234	26000	-
3	15.5	1840	2.3	93.89	**BG80Z-../DSE11SA4**	234	26000	-
3	13	2200	1.9	112.4	**BG80Z-../DSE11SA4**	234	26000	-
3	11.5	2450	1.7	124.8	**BG80Z-../DSE11SA4**	234	26000	-
3	9.8	2900	1.45	145.4	**BG80Z-../DSE11SA4**	234	26000	-
3	8.8	3250	1.3	161.5	**BG80Z-../DSE11SA4**	234	26000	-
3	7.7	3700	1.15	186.8	**BG80Z-../DSE11SA4**	234	26000	-
3	6.9	4150	1.0	207.4	**BG80Z-../DSE11SA4**	234	26000	-
3	6.3	4250	1.1	227.2	**BG80G40-../DSE11SA4**	242	26000	-
3	5.7	4700	0.98	252.3	**BG80G40-../DSE11SA4**	242	26000	-
3	5.1	5300	0.87	282.8	**BG80G40-../DSE11SA4**	242	26000	-
3	10.5	2700	3.1	139.2	**BG90Z-../DSE11SA4**	336	65000	-
3	8.8	3250	2.6	163.0	**BG90Z-../DSE11SA4**	336	65000	-
3	8.0	3550	2.4	178.5	**BG90Z-../DSE11SA4**	336	65000	-
3	6.9	4150	2.0	208.3	**BG90Z-../DSE11SA4**	336	65000	-
3	6.3	4500	1.85	228.1	**BG90Z-../DSE11SA4**	336	65000	-
3	5.5	4750	1.95	262.5	**BG90G50-../DSE11SA4**	353	65000	-
3	4.8	5600	1.65	298.8	**BG90G50-../DSE11SA4**	353	65000	-
3	4.0	6600	1.4	360.3	**BG90G50-../DSE11SA4**	353	65000	-
3	3.3	8200	1.1	435.8	**BG90G50-../DSE11SA4**	353	65000	-
3	2.9	9300	0.99	504.7	**BG90G50-../DSE11SA4**	353	65000	-
3	2.5	10800	0.85	588.8	**BG90G50-../DSE11SA4**	353	65000	-
3	5.5	5200	3.2	259.0	**BG100-../DSE11SA4**	453	90000	-
3	4.8	5900	3.1	300.4	**BG100Z-../DSE11SA4**	543	90000	-
3	4.2	6800	2.7	343.6	**BG100Z-../DSE11SA4**	543	90000	-
3	3.8	7500	2.5	382.6	**BG100Z-../DSE11SA4**	543	90000	-
3	3.2	8900	2.1	456.7	**BG100Z-../DSE11SA4**	543	90000	-
3	2.8	10200	1.8	508.5	**BG100Z-../DSE11SA4**	543	90000	-
3	2.5	11400	1.6	591.1	**BG100Z-../DSE11SA4**	543	90000	-
3	2.2	13000	1.4	658.1	**BG100Z-../DSE11SA4**	543	90000	-
3	1.9	15000	1.25	759.0	**BG100Z-../DSE11SA4**	543	90000	-
3	1.7	16800	1.1	845.1	**BG100Z-../DSE11SA4**	543	90000	-
3	1.5	17500	1.05	976.1	**BG100G50-../DSE11SA4**	540	90000	-
3	1.4	19000	0.97	1043	**BG100G50-../DSE11SA4**	540	90000	-
3	1.2	22200	0.83	1204	**BG100G50-../DSE11SA4**	540	90000	-

4 kW

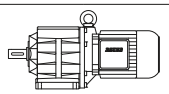

P_N	50 Hz			i	Type	m	F_{RN}	F_{RV}
	n_2	M_2	f_B					
[kW]	[1/min]	[Nm]	[—]	[:1]		[kg]	[N]	[N]
4	540	70	1.85	2.67	**BG30-../DSE11MA4**	46	1450	-
4	420	90	1.55	3.40	**BG30-../DSE11MA4**	46	1580	-
4	340	112	1.55	4.21	**BG30-../DSE11MA4**	46	1630	-
4	265	144	1.4	5.44	**BG30-../DSE11MA4**	46	1670	-
4	215	177	1.3	6.76	**BG30-../DSE11MA4**	46	2550	-
4	190	200	1.15	7.50	**BG30-../DSE11MA4**	46	2750	-
4	180	210	1.05	7.91	**BG30-../DSE11MA4**	46	1760	-
4	166	230	1.05	8.60	**BG30-../DSE11MA4**	46	2800	-
4	149	255	1.0	9.55	**BG30-../DSE11MA4**	46	3000	-
4	134	285	0.93	10.65	**BG30-../DSE11MA4**	46	2950	-
4	121	315	0.87	11.82	**BG30-../DSE11MA4**	46	3200	-
4	104	365	0.81	13.77	**BG30-../DSE11MA4**	46	3150	-
4	580	65	3.1	2.46	**BG40-../DSE11MA4**	65	2150	-
4	450	84	2.7	3.19	**BG40-../DSE11MA4**	65	2350	-
4	360	106	2.3	3.97	**BG40-../DSE11MA4**	65	2400	-
4	290	131	2.0	4.94	**BG40-../DSE11MA4**	65	2450	-

The torques marked (*) are maximum permissible torques for service factor f_B=1.0.

4 kW

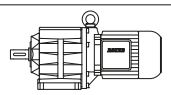

P_N	50 Hz			i	Type	m	F_{RN}	F_{RV}
	n_2	M_2	f_B					
[kW]	[1/min]	[Nm]	[—]	[:1]		[kg]	[N]	[N]
4	230	166	1.8	6.29	**BG40-../DSE11MA4**	65	2600	-
4	225	169	1.85	6.40	**BG40-../DSE11MA4**	65	3750	-
4	200	191	1.7	7.11	**BG40-../DSE11MA4**	65	3950	-
4	187	200	1.5	7.62	**BG40-../DSE11MA4**	65	2650	-
4	171	220	1.55	8.31	**BG40-../DSE11MA4**	65	4100	-
4	158	240	1.25	9.00	**BG40-../DSE11MA4**	65	2650	-
4	154	245	1.45	9.23	**BG40-../DSE11MA4**	65	4350	-
4	138	275	1.35	10.35	**BG40-../DSE11MA4**	65	4350	-
4	124	305	1.3	11.49	**BG40-../DSE11MA4**	65	4600	-
4	111	340	1.2	12.86	**BG40-../DSE11MA4**	65	4500	-
4	100	380	1.1	14.28	**BG40-../DSE11MA4**	65	4900	-
4	87	435	0.98	16.39	**BG40-../DSE11MA4**	65	5300	-
4	79	480	0.89	18.19	**BG40-../DSE11MA4**	65	5600	-
4	72	530	0.8	19.84	**BG40-../DSE11MA4**	65	5800	-
4	290	131	3.0	4.91	**BG50-../DSE11MA4**	75	3500	-
4	235	162	2.7	6.07	**BG50-../DSE11MA4**	75	4700	-
4	215	177	2.5	6.74	**BG50-../DSE11MA4**	75	3750	-
4	164	230	2.2	8.70	**BG50-../DSE11MA4**	75	5300	-
4	148	255	2.1	9.65	**BG50-../DSE11MA4**	75	5600	-
4	118	320	1.8	12.06	**BG50-../DSE11MA4**	75	5700	-
4	107	355	1.65	13.36	**BG50-../DSE11MA4**	75	6100	-
4	86	440	1.45	16.53	**BG50-../DSE11MA4**	75	6500	-
4	78	485	1.3	18.33	**BG50-../DSE11MA4**	75	7200	-
4	65	580	1.1	21.96	**BG50-../DSE11MA4**	75	8000	-
4	59	640	0.98	24.34	**BG50-../DSE11MA4**	75	8700	-
4	48	790	0.8	29.62	**BG50-../DSE11MA4**	75	8000	-
4	117	325	3.0	12.16	**BG60-../DSE11MA4**	107	10800	-
4	106	360	2.8	13.47	**BG60-../DSE11MA4**	107	11200	-
4	85	445	2.5	16.80	**BG60-../DSE11MA4**	107	12000	-
4	77	495	2.3	18.62	**BG60-../DSE11MA4**	107	12400	-
4	64	590	2.0	22.40	**BG60-../DSE11MA4**	107	13300	-
4	58	650	1.85	24.82	**BG60-../DSE11MA4**	107	13800	-
4	48.5	780	1.55	29.31	**BG60-../DSE11MA4**	107	14800	-
4	44	860	1.4	32.48	**BG60-../DSE11MA4**	107	15400	-
4	37	1030	1.15	38.85	**BG60-../DSE11MA4**	107	16000	-
4	33	1150	1.05	43.05	**BG60-../DSE11MA4**	107	16000	-
4	28.5	1340	0.9	50.31	**BG60-../DSE11MA4**	107	16000	-
4	25.5	1490	0.81	55.76	**BG60-../DSE11MA4**	107	16000	-
4	53	720	3.2	27.21	**BG70-../DSE11MA4**	138	16400	-
4	48	790	2.9	29.69	**BG70-../DSE11MA4**	138	16900	-
4	40.5	940	2.4	35.24	**BG70-../DSE11MA4**	138	18300	-
4	36.5	1040	2.2	39.22	**BG70-../DSE11MA4**	138	19100	-
4	31	1230	1.85	46.54	**BG70-../DSE11MA4**	138	20000	-
4	28.5	1340	1.7	50.40	**BG70-../DSE11MA4**	138	20000	-
4	24	1590	1.45	59.82	**BG70-../DSE11MA4**	138	20000	-
4	22	1730	1.35	64.85	**BG70Z-../DSE11MA4**	164	20000	-
4	19.5	1950	1.2	73.82	**BG70Z-../DSE11MA4**	164	20000	-
4	16.5	2300	1.0	87.61	**BG70Z-../DSE11MA4**	164	20000	-
4	15	2500	0.92	95.74	**BG70Z-../DSE11MA4**	164	20000	-
4	29.5	1290	3.3	48.80	**BG80-../DSE11MA4**	192	23800	-
4	25	1520	2.8	57.24	**BG80-../DSE11MA4**	192	25400	-
4	22.5	1690	2.5	63.56	**BG80-../DSE11MA4**	192	26000	-
4	21.5	1770	2.4	66.40	**BG80Z-../DSE11MA4**	234	26000	-
4	19.5	1950	2.2	73.73	**BG80Z-../DSE11MA4**	234	26000	-
4	17	2200	1.9	84.55	**BG80Z-../DSE11MA4**	234	26000	-
4	15.5	2450	1.7	93.89	**BG80Z-../DSE11MA4**	234	26000	-
4	13	2900	1.45	112.4	**BG80Z-../DSE11MA4**	234	26000	-
4	11.5	3300	1.25	124.8	**BG80Z-../DSE11MA4**	234	26000	-
4	9.8	3850	1.1	145.4	**BG80Z-../DSE11MA4**	234	26000	-
4	8.8	4300	0.98	161.5	**BG80Z-../DSE11MA4**	234	26000	-
4	7.7	4950	0.85	186.8	**BG80Z-../DSE11MA4**	234	26000	-
4	6.3	5700	0.81	227.2	**BG80G40-../DSE11MA4**	242	26000	-
4	13.5	2800	3.0	105.7	**BG90Z-../DSE11MA4**	336	65000	-
4	11.5	3300	2.5	127.1	**BG90Z-../DSE11MA4**	336	65000	-
4	10.5	3600	2.3	139.2	**BG90Z-../DSE11MA4**	336	65000	-

The torques marked (*) are maximum permissible torques for service factor f_B=1.0.

4 kW

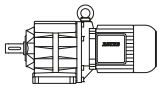

P_N	50 Hz			i	Type	m	F_{RN}	F_{RV}
	n_2	M_2	f_B					
[kW]	[1/min]	[Nm]	[—]	[:1]		[kg]	[N]	[N]
4	8.8	4300	1.95	163.0	**BG90Z-../DSE11MA4**	336	65000	-
4	8.0	4750	1.75	178.5	**BG90Z-../DSE11MA4**	336	65000	-
4	6.9	5500	1.55	208.3	**BG90Z-../DSE11MA4**	336	65000	-
4	6.3	6000	1.4	228.1	**BG90Z-../DSE11MA4**	336	65000	-
4	5.5	6500	1.4	262.5	**BG90G50-../DSE11MA4**	353	65000	-
4	4.8	7600	1.2	298.8	**BG90G50-../DSE11MA4**	353	65000	-
4	4.0	9000	1.0	360.3	**BG90G50-../DSE11MA4**	353	65000	-
4	3.3	11100	0.83	435.8	**BG90G50-../DSE11MA4**	353	65000	-
4	7.2	5300	3.2	198.8	**BG100-../DSE11MA4**	453	90000	-
4	6.2	6100	2.8	232.6	**BG100-../DSE11MA4**	453	90000	-
4	5.5	6900	2.4	259.0	**BG100-../DSE11MA4**	453	90000	-
4	5.3	7200	2.6	269.8	**BG100Z-../DSE11MA4**	543	90000	-
4	4.8	7900	2.3	300.4	**BG100Z-../DSE11MA4**	543	90000	-
4	4.2	9000	2.1	343.6	**BG100Z-../DSE11MA4**	543	90000	-
4	3.8	10000	1.85	382.6	**BG100Z-../DSE11MA4**	543	90000	-
4	3.2	11900	1.55	456.7	**BG100Z-../DSE11MA4**	543	90000	-
4	2.8	13600	1.35	508.5	**BG100Z-../DSE11MA4**	543	90000	-
4	2.5	15200	1.2	591.1	**BG100Z-../DSE11MA4**	543	90000	-
4	2.2	17300	1.05	658.1	**BG100Z-../DSE11MA4**	543	90000	-
4	1.9	20100	0.92	759.0	**BG100Z-../DSE11MA4**	543	90000	-
4	1.7	22400	0.83	845.1	**BG100Z-../DSE11MA4**	543	90000	-

5.5 kW

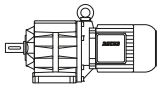

P_N	50 Hz			i	Type	m	F_{RN}	F_{RV}
	n_2	M_2	f_B					
[kW]	[1/min]	[Nm]	[—]	[:1]		[kg]	[N]	[N]
5.5	540	97	1.3	2.67	**BG30-../DSE11LA4**	58	1450	-
5.5	420	125	1.1	3.40	**BG30-../DSE11LA4**	58	1580	-
5.5	340	154	1.1	4.21	**BG30-../DSE11LA4**	58	1630	-
5.5	265	198	1.0	5.44	**BG30-../DSE11LA4**	58	1670	-
5.5	215	240	0.94	6.76	**BG30-../DSE11LA4**	58	2550	-
5.5	190	275	0.84	7.50	**BG30-../DSE11LA4**	58	2750	-
5.5	580	90	2.2	2.46	**BG40-../DSE11LA4**	77	2150	-
5.5	450	116	1.95	3.19	**BG40-../DSE11LA4**	77	2350	-
5.5	360	145	1.7	3.97	**BG40-../DSE11LA4**	77	2400	-
5.5	290	181	1.5	4.94	**BG40-../DSE11LA4**	77	2450	-
5.5	230	225	1.3	6.29	**BG40-../DSE11LA4**	77	2600	-
5.5	225	230	1.35	6.40	**BG40-../DSE11LA4**	77	3750	-
5.5	200	260	1.25	7.11	**BG40-../DSE11LA4**	77	3950	-
5.5	187	280	1.05	7.62	**BG40-../DSE11LA4**	77	2650	-
5.5	171	305	1.15	8.31	**BG40-../DSE11LA4**	77	4100	-
5.5	158	330	0.89	9.00	**BG40-../DSE11LA4**	77	2650	-
5.5	154	340	1.05	9.23	**BG40-../DSE11LA4**	77	4350	-
5.5	138	380	0.99	10.35	**BG40-../DSE11LA4**	77	4350	-
5.5	124	420	0.93	11.49	**BG40-../DSE11LA4**	77	4600	-
5.5	111	470	0.87	12.86	**BG40-../DSE11LA4**	77	4500	-
5.5	100	520	0.81	14.28	**BG40-../DSE11LA4**	77	4900	-
5.5	400	131	2.6	3.55	**BG50-../DSE11LA4**	86	3300	-
5.5	290	181	2.2	4.91	**BG50-../DSE11LA4**	86	3500	-
5.5	235	220	2.0	6.07	**BG50-../DSE11LA4**	86	4700	-
5.5	215	240	1.9	6.74	**BG50-../DSE11LA4**	86	3750	-
5.5	164	320	1.6	8.70	**BG50-../DSE11LA4**	86	5300	-
5.5	148	350	1.5	9.65	**BG50-../DSE11LA4**	86	5600	-
5.5	118	445	1.3	12.06	**BG50-../DSE11LA4**	86	5700	-
5.5	107	490	1.2	13.36	**BG50-../DSE11LA4**	86	6100	-
5.5	86	610	1.05	16.53	**BG50-../DSE11LA4**	86	6500	-
5.5	78	670	0.94	18.33	**BG50-../DSE11LA4**	86	7200	-
5.5	210	250	3.1	6.88	**BG60-../DSE11LA4**	119	8600	-
5.5	156	335	2.7	9.13	**BG60-../DSE11LA4**	119	9800	-
5.5	141	370	2.5	10.12	**BG60-../DSE11LA4**	119	10200	-
5.5	117	445	2.2	12.16	**BG60-../DSE11LA4**	119	10800	-
5.5	106	495	2.1	13.47	**BG60-../DSE11LA4**	119	11200	-

The torques marked (*) are maximum permissible torques for service factor f_B=1.0.

5.5 kW

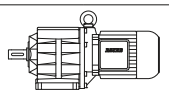

P_N	50 Hz			i	Type	m	F_{RN}	F_{RV}
	n_2	M_2	f_B					
[kW]	[1/min]	[Nm]	[—]	[:1]		[kg]	[N]	[N]
5.5	85	610	1.8	16.80	**BG60-../DSE11LA4**	119	12000	-
5.5	77	680	1.7	18.62	**BG60-../DSE11LA4**	119	12400	-
5.5	64	820	1.45	22.40	**BG60-../DSE11LA4**	119	13300	-
5.5	58	900	1.35	24.82	**BG60-../DSE11LA4**	119	13800	-
5.5	48.5	1080	1.1	29.31	**BG60-../DSE11LA4**	119	14800	-
5.5	44	1190	1.0	32.48	**BG60-../DSE11LA4**	119	15400	-
5.5	37	1410	0.85	38.85	**BG60-../DSE11LA4**	119	16000	-
5.5	68	770	3.0	20.98	**BG70-../DSE11LA4**	149	14600	-
5.5	62	840	2.7	22.92	**BG70-../DSE11LA4**	149	15100	-
5.5	53	990	2.3	27.21	**BG70-../DSE11LA4**	149	16400	-
5.5	48	1090	2.1	29.69	**BG70-../DSE11LA4**	149	16900	-
5.5	40.5	1290	1.8	35.24	**BG70-../DSE11LA4**	149	18300	-
5.5	36.5	1430	1.6	39.22	**BG70-../DSE11LA4**	149	19100	-
5.5	31	1690	1.35	46.54	**BG70-../DSE11LA4**	149	20000	-
5.5	28.5	1840	1.25	50.40	**BG70-../DSE11LA4**	149	20000	-
5.5	24	2150	1.05	59.82	**BG70-../DSE11LA4**	149	20000	-
5.5	22	2350	0.98	64.85	**BG70Z-../DSE11LA4**	176	20000	-
5.5	19.5	2650	0.87	73.82	**BG70Z-../DSE11LA4**	176	20000	-
5.5	41.5	1260	3.3	34.22	**BG80-../DSE11LA4**	204	20200	-
5.5	37.5	1400	3.0	38.00	**BG80-../DSE11LA4**	204	21300	-
5.5	32.5	1610	2.6	43.94	**BG80-../DSE11LA4**	204	22600	-
5.5	29.5	1780	2.4	48.80	**BG80-../DSE11LA4**	204	23800	-
5.5	25	2100	2.0	57.24	**BG80-../DSE11LA4**	204	25400	-
5.5	22.5	2300	1.85	63.56	**BG80-../DSE11LA4**	204	26000	-
5.5	21.5	2400	1.75	66.40	**BG80Z-../DSE11LA4**	246	26000	-
5.5	19.5	2650	1.6	73.73	**BG80Z-../DSE11LA4**	246	26000	-
5.5	17	3050	1.4	84.55	**BG80Z-../DSE11LA4**	246	26000	-
5.5	15.5	3350	1.25	93.89	**BG80Z-../DSE11LA4**	246	26000	-
5.5	13	4000	1.05	112.4	**BG80Z-../DSE11LA4**	246	26000	-
5.5	11.5	4550	0.92	124.8	**BG80Z-../DSE11LA4**	246	26000	-
5.5	25	2100	3.2	57.04	**BG90Z-../DSE11LA4**	348	65000	-
5.5	23	2250	3.3	62.47	**BG90Z-../DSE11LA4**	348	65000	-
5.5	19	2750	3.1	76.61	**BG90Z-../DSE11LA4**	348	65000	-
5.5	17	3050	2.8	83.91	**BG90Z-../DSE11LA4**	348	65000	-
5.5	15	3500	2.4	96.53	**BG90Z-../DSE11LA4**	348	65000	-
5.5	13.5	3850	2.2	105.7	**BG90Z-../DSE11LA4**	348	65000	-
5.5	11.5	4550	1.85	127.1	**BG90Z-../DSE11LA4**	348	65000	-
5.5	10.5	5000	1.7	139.2	**BG90Z-../DSE11LA4**	348	65000	-
5.5	8.8	5900	1.4	163.0	**BG90Z-../DSE11LA4**	348	65000	-
5.5	8.0	6500	1.3	178.5	**BG90Z-../DSE11LA4**	348	65000	-
5.5	6.9	7600	1.1	208.3	**BG90Z-../DSE11LA4**	348	65000	-
5.5	6.3	8300	1.0	228.1	**BG90Z-../DSE11LA4**	348	65000	-
5.5	5.5	9100	1.0	262.5	**BG90G50-../DSE11LA4**	365	65000	-
5.5	4.8	10600	0.87	298.8	**BG90G50-../DSE11LA4**	365	65000	-
5.5	9.2	5700	2.9	154.8	**BG100-../DSE11LA4**	465	90000	-
5.5	8.0	6500	2.6	178.6	**BG100-../DSE11LA4**	465	90000	-
5.5	7.2	7200	2.3	198.8	**BG100-../DSE11LA4**	465	90000	-
5.5	6.2	8400	2.0	232.6	**BG100-../DSE11LA4**	465	90000	-
5.5	5.5	9500	1.75	259.0	**BG100-../DSE11LA4**	465	90000	-
5.5	5.3	9900	1.85	269.8	**BG100Z-../DSE11LA4**	555	90000	-
5.5	4.8	10900	1.7	300.4	**BG100Z-../DSE11LA4**	555	90000	-
5.5	4.2	12500	1.5	343.6	**BG100Z-../DSE11LA4**	555	90000	-
5.5	3.8	13800	1.35	382.6	**BG100Z-../DSE11LA4**	555	90000	-
5.5	3.2	16400	1.15	456.7	**BG100Z-../DSE11LA4**	555	90000	-
5.5	2.8	18700	0.99	508.5	**BG100Z-../DSE11LA4**	555	90000	-
5.5	2.5	21000	0.88	591.1	**BG100Z-../DSE11LA4**	555	90000	-

The torques marked (*) are maximum permissible torques for service factor f_B=1.0.

7.5 kW

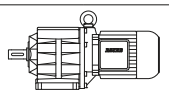

P_N	50 Hz			i	Type	m	F_{RN}	F_{RV}
	n_2	M_2	f_B					
[kW]	[1/min]	[Nm]	[—]	[:1]		[kg]	[N]	[N]
7.5	590	121	2.5	2.47	**BG50-../DSE13MA4**	98	2900	-
7.5	410	174	2.0	3.55	**BG50-../DSE13MA4**	98	3300	-
7.5	295	240	1.65	4.91	**BG50-../DSE13MA4**	98	3500	-
7.5	240	295	1.5	6.07	**BG50-../DSE13MA4**	98	4700	-
7.5	215	330	1.35	6.74	**BG50-../DSE13MA4**	98	3750	-
7.5	166	430	1.2	8.70	**BG50-../DSE13MA4**	98	5300	-
7.5	150	475	1.1	9.65	**BG50-../DSE13MA4**	98	5600	-
7.5	120	590	0.98	12.06	**BG50-../DSE13MA4**	98	5700	-
7.5	108	660	0.9	13.36	**BG50-../DSE13MA4**	98	6100	-
7.5	390	183	3.3	3.74	**BG60-../DSE13MA4**	132	7100	-
7.5	290	245	2.8	4.98	**BG60-../DSE13MA4**	132	7800	-
7.5	235	300	2.6	6.16	**BG60-../DSE13MA4**	132	8500	-
7.5	215	330	2.4	6.82	**BG60-../DSE13MA4**	132	8900	-
7.5	210	340	2.3	6.88	**BG60-../DSE13MA4**	132	8600	-
7.5	158	450	1.95	9.13	**BG60-../DSE13MA4**	132	9800	-
7.5	143	500	1.8	10.12	**BG60-../DSE13MA4**	132	10200	-
7.5	119	600	1.65	12.16	**BG60-../DSE13MA4**	132	10800	-
7.5	107	660	1.55	13.47	**BG60-../DSE13MA4**	132	11200	-
7.5	86	830	1.35	16.80	**BG60-../DSE13MA4**	132	12000	-
7.5	78	910	1.25	18.62	**BG60-../DSE13MA4**	132	12400	-
7.5	65	1100	1.1	22.40	**BG60-../DSE13MA4**	132	13300	-
7.5	59	1210	0.99	24.82	**BG60-../DSE13MA4**	132	13800	-
7.5	49.5	1440	0.83	29.31	**BG60-../DSE13MA4**	132	14800	-
7.5	93	770	3.0	15.53	**BG70-../DSE13MA4**	162	12700	-
7.5	82	870	2.6	17.68	**BG70-../DSE13MA4**	162	13400	-
7.5	69	1030	2.2	20.98	**BG70-../DSE13MA4**	162	14600	-
7.5	63	1130	2.0	22.92	**BG70-../DSE13MA4**	162	15100	-
7.5	53	1350	1.7	27.21	**BG70-../DSE13MA4**	162	16400	-
7.5	49	1460	1.6	29.69	**BG70-../DSE13MA4**	162	16900	-
7.5	41	1740	1.3	35.24	**BG70-../DSE13MA4**	162	18300	-
7.5	37	1930	1.2	39.22	**BG70-../DSE13MA4**	162	19100	-
7.5	31	2300	1.0	46.54	**BG70-../DSE13MA4**	162	20000	-
7.5	29	2450	0.94	50.40	**BG70-../DSE13MA4**	162	20000	-
7.5	55	1300	3.2	26.44	**BG80-../DSE13MA4**	216	17900	-
7.5	49.5	1440	2.9	29.36	**BG80-../DSE13MA4**	216	18900	-
7.5	42.5	1680	2.5	34.22	**BG80-../DSE13MA4**	216	20200	-
7.5	38	1880	2.2	38.00	**BG80-../DSE13MA4**	216	21300	-
7.5	33	2150	1.95	43.94	**BG80-../DSE13MA4**	216	22600	-
7.5	30	2350	1.8	48.80	**BG80-../DSE13MA4**	216	23800	-
7.5	25.5	2800	1.5	57.24	**BG80-../DSE13MA4**	216	25400	-
7.5	23	3100	1.35	63.56	**BG80-../DSE13MA4**	216	26000	-
7.5	22	3250	1.3	66.40	**BG80Z-../DSE13MA4**	259	26000	-
7.5	20	3550	1.2	73.73	**BG80Z-../DSE13MA4**	259	26000	-
7.5	17.5	4050	1.05	84.55	**BG80Z-../DSE13MA4**	259	26000	-
7.5	15.5	4600	0.91	93.89	**BG80Z-../DSE13MA4**	259	26000	-
7.5	27	2650	3.2	53.46	**BG90-../DSE13MA4**	305	65000	-
7.5	25.5	2800	2.4	57.04	**BG90Z-../DSE13MA4**	361	65000	-
7.5	23.5	3000	2.5	62.47	**BG90Z-../DSE13MA4**	361	65000	-
7.5	19	3750	2.2	76.61	**BG90Z-../DSE13MA4**	361	65000	-
7.5	17.5	4050	2.1	83.91	**BG90Z-../DSE13MA4**	361	65000	-
7.5	15	4750	1.75	96.53	**BG90Z-../DSE13MA4**	361	65000	-
7.5	14	5100	1.65	105.7	**BG90Z-../DSE13MA4**	361	65000	-
7.5	11.5	6200	1.35	127.1	**BG90Z-../DSE13MA4**	361	65000	-
7.5	10.5	6800	1.25	139.2	**BG90Z-../DSE13MA4**	361	65000	-
7.5	8.9	8000	1.05	163.0	**BG90Z-../DSE13MA4**	361	65000	-
7.5	8.1	8800	0.95	178.5	**BG90Z-../DSE13MA4**	361	65000	-
7.5	7.0	10200	0.82	208.3	**BG90Z-../DSE13MA4**	361	65000	-
7.5	6.6	10500	0.88	219.9	**BG90G50-../DSE13MA4**	377	65000	-
7.5	13.5	5300	3.2	107.5	**BG100-../DSE13MA4**	477	90000	-
7.5	12.5	5700	2.9	119.7	**BG100-../DSE13MA4**	477	90000	-
7.5	10.5	6800	2.5	139.1	**BG100-../DSE13MA4**	477	90000	-
7.5	9.4	7600	2.2	154.8	**BG100-../DSE13MA4**	477	90000	-
7.5	8.1	8800	1.9	178.6	**BG100-../DSE13MA4**	477	90000	-
7.5	7.3	9800	1.7	198.8	**BG100-../DSE13MA4**	477	90000	-
7.5	6.2	11500	1.45	232.6	**BG100-../DSE13MA4**	477	90000	-

The torques marked (*) are maximum permissible torques for service factor f_B=1.0.

7.5 kW

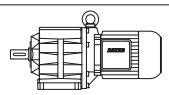

P_N	50 Hz			i	Type	m	F_{RN}	F_{RV}
	n_2	M_2	f_B					
[kW]	[1/min]	[Nm]	[—]	[:1]		[kg]	[N]	[N]
7.5	5.6	12700	1.3	259.0	**BG100-../DSE13MA4**	477	90000	-
7.5	5.4	13200	1.4	269.8	**BG100Z-../DSE13MA4**	568	90000	-
7.5	4.8	14900	1.25	300.4	**BG100Z-../DSE13MA4**	568	90000	-
7.5	4.2	17000	1.1	343.6	**BG100Z-../DSE13MA4**	568	90000	-
7.5	3.8	18800	0.98	382.6	**BG100Z-../DSE13MA4**	568	90000	-
7.5	3.2	22300	0.83	456.7	**BG100Z-../DSE13MA4**	568	90000	-

9.5 kW

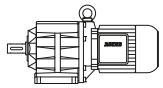

P_N	50 Hz			i	Type	m	F_{RN}	F_{RV}
	n_2	M_2	f_B					
[kW]	[1/min]	[Nm]	[—]	[:1]		[kg]	[N]	[N]
9.5	590	153	2.0	2.47	**BG50-../DSE13LA4**	101	2900	-
9.5	410	220	1.6	3.55	**BG50-../DSE13LA4**	101	3300	-
9.5	295	305	1.3	4.91	**BG50-../DSE13LA4**	101	3500	-
9.5	240	375	1.2	6.07	**BG50-../DSE13LA4**	101	4700	-
9.5	215	420	1.05	6.74	**BG50-../DSE13LA4**	101	3750	-
9.5	166	540	0.94	8.70	**BG50-../DSE13LA4**	101	5300	-
9.5	150	600	0.87	9.65	**BG50-../DSE13LA4**	101	5600	-
9.5	390	230	2.7	3.74	**BG60-../DSE13LA4**	135	7100	-
9.5	290	310	2.2	4.98	**BG60-../DSE13LA4**	135	7800	-
9.5	235	385	2.0	6.16	**BG60-../DSE13LA4**	135	8500	-
9.5	215	420	1.9	6.82	**BG60-../DSE13LA4**	135	8900	-
9.5	210	430	1.8	6.88	**BG60-../DSE13LA4**	135	8600	-
9.5	158	570	1.55	9.13	**BG60-../DSE13LA4**	135	9800	-
9.5	143	630	1.45	10.12	**BG60-../DSE13LA4**	135	10200	-
9.5	119	760	1.3	12.16	**BG60-../DSE13LA4**	135	10800	-
9.5	107	840	1.2	13.47	**BG60-../DSE13LA4**	135	11200	-
9.5	86	1050	1.05	16.80	**BG60-../DSE13LA4**	135	12000	-
9.5	78	1160	0.99	18.62	**BG60-../DSE13LA4**	135	12400	-
9.5	65	1390	0.86	22.40	**BG60-../DSE13LA4**	135	13300	-
9.5	121	740	3.1	11.97	**BG70-../DSE13LA4**	165	11200	-
9.5	111	810	2.8	13.08	**BG70-../DSE13LA4**	165	11600	-
9.5	93	970	2.4	15.53	**BG70-../DSE13LA4**	165	12700	-
9.5	82	1100	2.1	17.68	**BG70-../DSE13LA4**	165	13400	-
9.5	69	1310	1.75	20.98	**BG70-../DSE13LA4**	165	14600	-
9.5	63	1440	1.6	22.92	**BG70-../DSE13LA4**	165	15100	-
9.5	53	1710	1.35	27.21	**BG70-../DSE13LA4**	165	16400	-
9.5	49	1850	1.25	29.69	**BG70-../DSE13LA4**	165	16900	-
9.5	41	2200	1.05	35.24	**BG70-../DSE13LA4**	165	18300	-
9.5	37	2450	0.94	39.22	**BG70-../DSE13LA4**	165	19100	-
9.5	66	1370	3.1	22.09	**BG80-../DSE13LA4**	219	16500	-
9.5	55	1640	2.6	26.44	**BG80-../DSE13LA4**	219	17900	-
9.5	49.5	1830	2.3	29.36	**BG80-../DSE13LA4**	219	18900	-
9.5	42.5	2100	2.0	34.22	**BG80-../DSE13LA4**	219	20200	-
9.5	38	2350	1.8	38.00	**BG80-../DSE13LA4**	219	21300	-
9.5	33	2700	1.55	43.94	**BG80-../DSE13LA4**	219	22600	-
9.5	30	3000	1.4	48.80	**BG80-../DSE13LA4**	219	23800	-
9.5	25.5	3550	1.2	57.24	**BG80-../DSE13LA4**	219	25400	-
9.5	23	3900	1.1	63.56	**BG80-../DSE13LA4**	219	26000	-
9.5	22	4100	1.0	66.40	**BG80Z-../DSE13LA4**	262	26000	-
9.5	20	4500	0.93	73.73	**BG80Z-../DSE13LA4**	262	26000	-
9.5	17.5	5100	0.82	84.55	**BG80Z-../DSE13LA4**	262	26000	-
9.5	34.5	2600	3.2	41.85	**BG90-../DSE13LA4**	308	65000	-
9.5	29.5	3050	2.8	48.82	**BG90-../DSE13LA4**	308	65000	-
9.5	27	3350	2.5	53.46	**BG90-../DSE13LA4**	308	65000	-
9.5	25.5	3550	1.9	57.04	**BG90Z-../DSE13LA4**	364	65000	-
9.5	23.5	3850	1.95	62.47	**BG90Z-../DSE13LA4**	364	65000	-
9.5	19	4750	1.75	76.61	**BG90Z-../DSE13LA4**	364	65000	-
9.5	17.5	5100	1.65	83.91	**BG90Z-../DSE13LA4**	364	65000	-
9.5	15	6000	1.4	96.53	**BG90Z-../DSE13LA4**	364	65000	-
9.5	14	6400	1.3	105.7	**BG90Z-../DSE13LA4**	364	65000	-
9.5	11.5	7800	1.1	127.1	**BG90Z-../DSE13LA4**	364	65000	-

The torques marked (*) are maximum permissible torques for service factor f_B=1.0.

9.5 kW

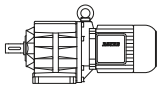

P_N	50 Hz			i	Type	m	F_{RN}	F_{RV}
	n_2	M_2	f_B					
[kW]	[1/min]	[Nm]	[—]	[:1]		[kg]	[N]	[N]
9.5	10.5	8600	0.98	139.2	**BG90Z-../DSE13LA4**	364	65000	-
9.5	8.9	10100	0.83	163.0	**BG90Z-../DSE13LA4**	364	65000	-
9.5	18	5000	3.3	80.85	**BG100-../DSE13LA4**	480	90000	-
9.5	16	5600	3.0	90.02	**BG100-../DSE13LA4**	480	90000	-
9.5	13.5	6700	2.5	107.5	**BG100-../DSE13LA4**	480	90000	-
9.5	12.5	7200	2.3	119.7	**BG100-../DSE13LA4**	480	90000	-
9.5	10.5	8600	1.95	139.1	**BG100-../DSE13LA4**	480	90000	-
9.5	9.4	9600	1.75	154.8	**BG100-../DSE13LA4**	480	90000	-
9.5	8.1	11200	1.5	178.6	**BG100-../DSE13LA4**	480	90000	-
9.5	7.3	12400	1.35	198.8	**BG100-../DSE13LA4**	480	90000	-
9.5	6.2	14600	1.15	232.6	**BG100-../DSE13LA4**	480	90000	-
9.5	5.6	16200	1.05	259.0	**BG100-../DSE13LA4**	480	90000	-
9.5	5.4	16800	1.1	269.8	**BG100Z-../DSE13LA4**	571	90000	-
9.5	4.8	18900	0.98	300.4	**BG100Z-../DSE13LA4**	571	90000	-
9.5	4.2	21600	0.86	343.6	**BG100Z-../DSE13LA4**	571	90000	-

11 kW

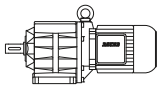

P_N	50 Hz			i	Type	m	F_{RN}	F_{RV}
	n_2	M_2	f_B					
[kW]	[1/min]	[Nm]	[—]	[:1]		[kg]	[N]	[N]
11	600	175	1.75	2.47	**BG50-../DSE16MB4**	125	2900	-
11	415	250	1.4	3.55	**BG50-../DSE16MB4**	125	3300	-
11	300	350	1.15	4.91	**BG50-../DSE16MB4**	125	3500	-
11	245	425	1.05	6.07	**BG50-../DSE16MB4**	125	4700	-
11	220	475	0.95	6.74	**BG50-../DSE16MB4**	125	3750	-
11	168	620	0.82	8.70	**BG50-../DSE16MB4**	125	5300	-
11	580	181	3.0	2.52	**BG60-../DSE16MB4**	159	6200	-
11	395	265	2.3	3.74	**BG60-../DSE16MB4**	159	7100	-
11	295	355	1.95	4.98	**BG60-../DSE16MB4**	159	7800	-
11	240	435	1.75	6.16	**BG60-../DSE16MB4**	159	8500	-
11	215	485	1.6	6.88	**BG60-../DSE16MB4**	159	8600	-
11	160	650	1.35	9.13	**BG60-../DSE16MB4**	159	9800	-
11	145	720	1.25	10.12	**BG60-../DSE16MB4**	159	10200	-
11	121	860	1.15	12.16	**BG60-../DSE16MB4**	159	10800	-
11	109	960	1.05	13.47	**BG60-../DSE16MB4**	159	11200	-
11	87	1200	0.92	16.80	**BG60-../DSE16MB4**	159	12000	-
11	79	1320	0.87	18.62	**BG60-../DSE16MB4**	159	12400	-
11	145	720	3.2	10.09	**BG70-../DSE16MB4**	194	10200	-
11	122	860	2.7	11.97	**BG70-../DSE16MB4**	194	11200	-
11	112	930	2.5	13.08	**BG70-../DSE16MB4**	194	11600	-
11	95	1100	2.1	15.53	**BG70-../DSE16MB4**	194	12700	-
11	83	1260	1.85	17.68	**BG70-../DSE16MB4**	194	13400	-
11	70	1500	1.55	20.98	**BG70-../DSE16MB4**	194	14600	-
11	64	1640	1.4	22.92	**BG70-../DSE16MB4**	194	15100	-
11	54	1940	1.2	27.21	**BG70-../DSE16MB4**	194	16400	-
11	49.5	2100	1.1	29.69	**BG70-../DSE16MB4**	194	16900	-
11	41.5	2500	0.92	35.24	**BG70-../DSE16MB4**	194	18300	-
11	37.5	2800	0.82	39.22	**BG70-../DSE16MB4**	194	19100	-
11	74	1410	3.0	19.89	**BG80-../DSE16MB4**	242	15500	-
11	67	1560	2.7	22.09	**BG80-../DSE16MB4**	242	16500	-
11	56	1870	2.2	26.44	**BG80-../DSE16MB4**	242	17900	-
11	50	2100	2.0	29.36	**BG80-../DSE16MB4**	242	18900	-
11	43	2400	1.75	34.22	**BG80-../DSE16MB4**	242	20200	-
11	38.5	2700	1.55	38.00	**BG80-../DSE16MB4**	242	21300	-
11	33.5	3100	1.35	43.94	**BG80-../DSE16MB4**	242	22600	-
11	30	3500	1.2	48.80	**BG80-../DSE16MB4**	242	23800	-
11	26	4000	1.05	57.24	**BG80-../DSE16MB4**	242	25400	-
11	23	4550	0.92	63.56	**BG80-../DSE16MB4**	242	26000	-
11	22	4750	0.88	66.40	**BG80Z-../DSE16MB4**	286	26000	-
11	20	5200	0.81	73.73	**BG80Z-../DSE16MB4**	286	26000	-
11	38.5	2700	3.1	38.21	**BG90-../DSE16MB4**	333	65000	-

The torques marked (*) are maximum permissible torques for service factor f_B=1.0.

11 kW

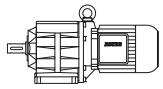

P_N	50 Hz			i	Type	m	F_{RN}	F_{RV}
	n_2	M_2	f_B					
[kW]	[1/min]	[Nm]	[—]	[:1]		[kg]	[N]	[N]
11	35	3000	2.8	41.85	**BG90-../DSE16MB4**	333	65000	-
11	30	3500	2.4	48.82	**BG90-../DSE16MB4**	333	65000	-
11	27.5	3800	2.2	53.46	**BG90-../DSE16MB4**	333	65000	-
11	26	4000	1.7	57.04	**BG90Z-../DSE16MB4**	392	65000	-
11	23.5	4450	1.7	62.47	**BG90Z-../DSE16MB4**	392	65000	-
11	19.5	5300	1.6	76.61	**BG90Z-../DSE16MB4**	392	65000	-
11	17.5	6000	1.4	83.91	**BG90Z-../DSE16MB4**	392	65000	-
11	15.5	6700	1.25	96.53	**BG90Z-../DSE16MB4**	392	65000	-
11	14	7500	1.1	105.7	**BG90Z-../DSE16MB4**	392	65000	-
11	11.5	9100	0.92	127.1	**BG90Z-../DSE16MB4**	392	65000	-
11	10.5	10000	0.84	139.2	**BG90Z-../DSE16MB4**	392	65000	-
11	21	5000	3.2	70.69	**BG100-../DSE16MB4**	504	90000	-
11	18.5	5600	3.0	80.85	**BG100-../DSE16MB4**	504	90000	-
11	16.5	6300	2.7	90.02	**BG100-../DSE16MB4**	504	90000	-
11	14	7500	2.2	107.5	**BG100-../DSE16MB4**	504	90000	-
11	12.5	8400	2.0	119.7	**BG100-../DSE16MB4**	504	90000	-
11	10.5	10000	1.7	139.1	**BG100-../DSE16MB4**	504	90000	-
11	9.5	11000	1.55	154.8	**BG100-../DSE16MB4**	504	90000	-
11	8.2	12800	1.3	178.6	**BG100-../DSE16MB4**	504	90000	-
11	7.4	14100	1.2	198.8	**BG100-../DSE16MB4**	504	90000	-
11	6.3	16600	1.0	232.6	**BG100-../DSE16MB4**	504	90000	-
11	5.7	18400	0.91	259.0	**BG100-../DSE16MB4**	504	90000	-
11	5.5	19100	0.97	269.8	**BG100Z-../DSE16MB4**	595	90000	-
11	4.9	21400	0.86	300.4	**BG100Z-../DSE16MB4**	595	90000	-

15 kW

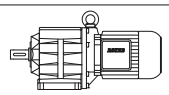

P_N	50 Hz			i	Type	m	F_{RN}	F_{RV}
	n_2	M_2	f_B					
[kW]	[1/min]	[Nm]	[—]	[:1]		[kg]	[N]	[N]
15	600	235	1.3	2.47	**BG50-../DSE16LB4**	138	2900	-
15	415	345	1.0	3.55	**BG50-../DSE16LB4**	138	3300	-
15	300	475	0.84	4.91	**BG50-../DSE16LB4**	138	3500	-
15	580	245	2.2	2.52	**BG60-../DSE16LB4**	172	6200	-
15	395	360	1.7	3.74	**BG60-../DSE16LB4**	172	7100	-
15	295	485	1.4	4.98	**BG60-../DSE16LB4**	172	7800	-
15	240	590	1.3	6.16	**BG60-../DSE16LB4**	172	8500	-
15	215	660	1.2	6.88	**BG60-../DSE16LB4**	172	8600	-
15	160	890	1.0	9.13	**BG60-../DSE16LB4**	172	9800	-
15	145	980	0.93	10.12	**BG60-../DSE16LB4**	172	10200	-
15	121	1180	0.84	12.16	**BG60-../DSE16LB4**	172	10800	-
15	205	690	3.1	7.14	**BG70-../DSE16LB4**	206	8800	-
15	173	820	2.8	8.48	**BG70-../DSE16LB4**	206	9500	-
15	145	980	2.3	10.09	**BG70-../DSE16LB4**	206	10200	-
15	122	1170	1.95	11.97	**BG70-../DSE16LB4**	206	11200	-
15	112	1270	1.8	13.08	**BG70-../DSE16LB4**	206	11600	-
15	95	1500	1.55	15.53	**BG70-../DSE16LB4**	206	12700	-
15	83	1720	1.35	17.68	**BG70-../DSE16LB4**	206	13400	-
15	70	2000	1.15	20.98	**BG70-../DSE16LB4**	206	14600	-
15	64	2200	1.05	22.92	**BG70-../DSE16LB4**	206	15100	-
15	54	2650	0.87	27.21	**BG70-../DSE16LB4**	206	16400	-
15	49.5	2850	0.81	29.69	**BG70-../DSE16LB4**	206	16900	-
15	94	1520	2.8	15.62	**BG80-../DSE16LB4**	256	13700	-
15	85	1680	2.5	17.35	**BG80-../DSE16LB4**	256	14600	-
15	74	1930	2.2	19.89	**BG80-../DSE16LB4**	256	15500	-
15	67	2100	2.0	22.09	**BG80-../DSE16LB4**	256	16500	-
15	56	2550	1.65	26.44	**BG80-../DSE16LB4**	256	17900	-
15	50	2850	1.45	29.36	**BG80-../DSE16LB4**	256	18900	-
15	43	3300	1.25	34.22	**BG80-../DSE16LB4**	256	20200	-
15	38.5	3700	1.15	38.00	**BG80-../DSE16LB4**	256	21300	-
15	33.5	4250	0.99	43.94	**BG80-../DSE16LB4**	256	22600	-
15	30	4750	0.88	48.80	**BG80-../DSE16LB4**	256	23800	-

The torques marked (*) are maximum permissible torques for service factor f_B=1.0.

15 kW

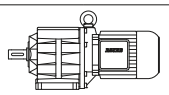

P_N	50 Hz			i	Type	m	F_{RN}	F_{RV}
	n_2	M_2	f_B					
[kW]	[1/min]	[Nm]	[—]	[:1]		[kg]	[N]	[N]
15	49.5	2850	2.9	29.78	**BG90-../DSE16LB4**	346	65000	-
15	45	3150	2.7	32.62	**BG90-../DSE16LB4**	346	65000	-
15	38.5	3700	2.3	38.21	**BG90-../DSE16LB4**	346	65000	-
15	35	4050	2.1	41.85	**BG90-../DSE16LB4**	346	65000	-
15	30	4750	1.75	48.82	**BG90-../DSE16LB4**	346	65000	-
15	27.5	5200	1.6	53.46	**BG90-../DSE16LB4**	346	65000	-
15	26	5500	1.25	57.04	**BG90Z-../DSE16LB4**	405	65000	-
15	23.5	6000	1.25	62.47	**BG90Z-../DSE16LB4**	405	65000	-
15	19.5	7300	1.15	76.61	**BG90Z-../DSE16LB4**	405	65000	-
15	17.5	8100	1.05	83.91	**BG90Z-../DSE16LB4**	405	65000	-
15	15.5	9200	0.91	96.53	**BG90Z-../DSE16LB4**	405	65000	-
15	14	10200	0.82	105.7	**BG90Z-../DSE16LB4**	405	65000	-
15	31.5	4500	3.1	46.43	**BG100-../DSE16LB4**	516	90000	-
15	28.5	5000	2.9	51.70	**BG100-../DSE16LB4**	516	90000	-
15	23	6200	2.5	63.49	**BG100-../DSE16LB4**	516	90000	-
15	21	6800	2.3	70.69	**BG100-../DSE16LB4**	516	90000	-
15	18.5	7700	2.1	80.85	**BG100-../DSE16LB4**	516	90000	-
15	16.5	8600	1.95	90.02	**BG100-../DSE16LB4**	516	90000	-
15	14	10200	1.65	107.5	**BG100-../DSE16LB4**	516	90000	-
15	12.5	11400	1.45	119.7	**BG100-../DSE16LB4**	516	90000	-
15	10.5	13600	1.25	139.1	**BG100-../DSE16LB4**	516	90000	-
15	9.5	15000	1.1	154.8	**BG100-../DSE16LB4**	516	90000	-
15	8.2	17400	0.97	178.6	**BG100-../DSE16LB4**	516	90000	-
15	7.4	19300	0.87	198.8	**BG100-../DSE16LB4**	516	90000	-

18.5 kW

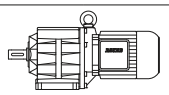

P_N	50 Hz			i	Type	m	F_{RN}	F_{RV}
	n_2	M_2	f_B					
[kW]	[1/min]	[Nm]	[—]	[:1]		[kg]	[N]	[N]
18.5	600	290	1.05	2.47	**BG50-../DSE16XB4**	148	2900	-
18.5	415	425	0.82	3.55	**BG50-../DSE16XB4**	148	3300	-
18.5	580	300	1.8	2.52	**BG60-../DSE16XB4**	182	6200	-
18.5	395	445	1.4	3.74	**BG60-../DSE16XB4**	182	7100	-
18.5	295	590	1.15	4.98	**BG60-../DSE16XB4**	182	7800	-
18.5	240	730	1.05	6.16	**BG60-../DSE16XB4**	182	8500	-
18.5	215	820	0.95	6.88	**BG60-../DSE16XB4**	182	8600	-
18.5	160	1100	0.81	9.13	**BG60-../DSE16XB4**	182	9800	-
18.5	205	860	2.5	7.14	**BG70-../DSE16XB4**	216	8800	-
18.5	173	1020	2.2	8.48	**BG70-../DSE16XB4**	216	9500	-
18.5	145	1210	1.9	10.09	**BG70-../DSE16XB4**	216	10200	-
18.5	122	1440	1.6	11.97	**BG70-../DSE16XB4**	216	11200	-
18.5	112	1570	1.45	13.08	**BG70-../DSE16XB4**	216	11600	-
18.5	95	1850	1.25	15.53	**BG70-../DSE16XB4**	216	12700	-
18.5	83	2100	1.1	17.68	**BG70-../DSE16XB4**	216	13400	-
18.5	70	2500	0.92	20.98	**BG70-../DSE16XB4**	216	14600	-
18.5	64	2750	0.84	22.92	**BG70-../DSE16XB4**	216	15100	-
18.5	128	1380	3.0	11.43	**BG80-../DSE16XB4**	266	11600	-
18.5	116	1520	2.8	12.69	**BG80-../DSE16XB4**	266	12400	-
18.5	94	1870	2.2	15.62	**BG80-../DSE16XB4**	266	13700	-
18.5	85	2050	2.0	17.35	**BG80-../DSE16XB4**	266	14600	-
18.5	74	2350	1.8	19.89	**BG80-../DSE16XB4**	266	15500	-
18.5	67	2600	1.6	22.09	**BG80-../DSE16XB4**	266	16500	-
18.5	56	3150	1.35	26.44	**BG80-../DSE16XB4**	266	17900	-
18.5	50	3500	1.2	29.36	**BG80-../DSE16XB4**	266	18900	-
18.5	43	4100	1.0	34.22	**BG80-../DSE16XB4**	266	20200	-
18.5	38.5	4550	0.92	38.00	**BG80-../DSE16XB4**	266	21300	-
18.5	33.5	5200	0.81	43.94	**BG80-../DSE16XB4**	266	22600	-
18.5	65	2700	3.1	22.62	**BG90-../DSE16XB4**	356	65000	-
18.5	59	2950	2.8	24.78	**BG90-../DSE16XB4**	356	65000	-
18.5	49.5	3550	2.4	29.78	**BG90-../DSE16XB4**	356	65000	-
18.5	45	3900	2.2	32.62	**BG90-../DSE16XB4**	356	65000	-

The torques marked (*) are maximum permissible torques for service factor f_B=1.0.

18.5 kW

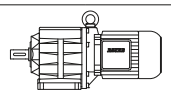

P_N	50 Hz			i	Type	m	F_{RN}	F_{RV}
	n_2	M_2	f_B					
[kW]	[1/min]	[Nm]	[—]	[:1]		[kg]	[N]	[N]
18.5	38.5	4550	1.85	38.21	**BG90-../DSE16XB4**	356	65000	-
18.5	35	5000	1.7	41.85	**BG90-../DSE16XB4**	356	65000	-
18.5	30	5800	1.45	48.82	**BG90-../DSE16XB4**	356	65000	-
18.5	27.5	6400	1.3	53.46	**BG90-../DSE16XB4**	356	65000	-
18.5	26	6700	1.0	57.04	**BG90Z-../DSE16XB4**	415	65000	-
18.5	23.5	7500	1.0	62.47	**BG90Z-../DSE16XB4**	415	65000	-
18.5	19.5	9000	0.93	76.61	**BG90Z-../DSE16XB4**	415	65000	-
18.5	17.5	10000	0.84	83.91	**BG90Z-../DSE16XB4**	415	65000	-
18.5	31.5	5600	2.5	46.43	**BG100-../DSE16XB4**	526	90000	-
18.5	28.5	6100	2.4	51.70	**BG100-../DSE16XB4**	526	90000	-
18.5	23	7600	2.0	63.49	**BG100-../DSE16XB4**	526	90000	-
18.5	21	8400	1.9	70.69	**BG100-../DSE16XB4**	526	90000	-
18.5	18.5	9500	1.75	80.85	**BG100-../DSE16XB4**	526	90000	-
18.5	16.5	10700	1.55	90.02	**BG100-../DSE16XB4**	526	90000	-
18.5	14	12600	1.35	107.5	**BG100-../DSE16XB4**	526	90000	-
18.5	12.5	14100	1.2	119.7	**BG100-../DSE16XB4**	526	90000	-
18.5	10.5	16800	1.0	139.1	**BG100-../DSE16XB4**	526	90000	-
18.5	9.5	18500	0.91	154.8	**BG100-../DSE16XB4**	526	90000	-

22 kW

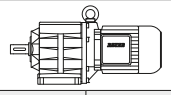

P_N	50 Hz			i	Type	m	F_{RN}	F_{RV}
	n_2	M_2	f_B					
[kW]	[1/min]	[Nm]	[—]	[:1]		[kg]	[N]	[N]
22	295	710	2.1	4.95	**BG70-../DSE18LB4**	257	6900	-
22	250	840	2.1	5.87	**BG70-../DSE18LB4**	257	8200	-
22	205	1020	2.1	7.14	**BG70-../DSE18LB4**	257	8800	-
22	173	1210	1.9	8.48	**BG70-../DSE18LB4**	257	9500	-
22	145	1440	1.6	10.09	**BG70-../DSE18LB4**	257	10200	-
22	122	1720	1.35	11.97	**BG70-../DSE18LB4**	257	11200	-
22	112	1870	1.25	13.08	**BG70-../DSE18LB4**	257	11600	-
22	95	2200	1.05	15.53	**BG70-../DSE18LB4**	257	12700	-
22	83	2500	0.92	17.68	**BG70-../DSE18LB4**	257	13400	-
22	250	840	3.2	5.94	**BG80-../DSE18LB4**	311	8300	-
22	225	930	3.2	6.60	**BG80-../DSE18LB4**	311	9100	-
22	176	1190	3.2	8.30	**BG80-../DSE18LB4**	311	10400	-
22	159	1320	3.0	9.21	**BG80-../DSE18LB4**	311	10800	-
22	128	1640	2.6	11.43	**BG80-../DSE18LB4**	311	11600	-
22	116	1810	2.3	12.69	**BG80-../DSE18LB4**	311	12400	-
22	94	2200	1.9	15.62	**BG80-../DSE18LB4**	311	13700	-
22	85	2450	1.7	17.35	**BG80-../DSE18LB4**	311	14600	-
22	74	2800	1.5	19.89	**BG80-../DSE18LB4**	311	15500	-
22	67	3100	1.35	22.09	**BG80-../DSE18LB4**	311	16500	-
22	56	3750	1.1	26.44	**BG80-../DSE18LB4**	311	17900	-
22	50	4200	1.0	29.36	**BG80-../DSE18LB4**	311	18900	-
22	43	4850	0.87	34.22	**BG80-../DSE18LB4**	311	20200	-
22	82	2550	3.2	17.96	**BG90-../DSE18LB4**	402	59800	-
22	75	2800	3.0	19.67	**BG90-../DSE18LB4**	402	62400	-
22	65	3200	2.6	22.62	**BG90-../DSE18LB4**	402	65000	-
22	59	3550	2.4	24.78	**BG90-../DSE18LB4**	402	65000	-
22	49.5	4200	2.0	29.78	**BG90-../DSE18LB4**	402	65000	-
22	45	4650	1.8	32.62	**BG90-../DSE18LB4**	402	65000	-
22	38.5	5400	1.55	38.21	**BG90-../DSE18LB4**	402	65000	-
22	35	6000	1.4	41.85	**BG90-../DSE18LB4**	402	65000	-
22	30	7000	1.2	48.82	**BG90-../DSE18LB4**	402	65000	-
22	27.5	7600	1.1	53.46	**BG90-../DSE18LB4**	402	65000	-
22	26	8000	0.85	57.04	**BG90Z-../DSE18LB4**	456	65000	-
22	23.5	8900	0.84	62.47	**BG90Z-../DSE18LB4**	456	65000	-
22	61	3400	3.3	23.95	**BG100-../DSE18LB4**	572	87900	-
22	43.5	4800	2.7	33.71	**BG100-../DSE18LB4**	572	88500	-
22	39	5300	2.5	37.54	**BG100-../DSE18LB4**	572	90000	-
22	31.5	6600	2.1	46.43	**BG100-../DSE18LB4**	572	90000	-
22	28.5	7300	2.0	51.70	**BG100-../DSE18LB4**	572	90000	-

The torques marked (*) are maximum permissible torques for service factor f_B=1.0.

22 kW

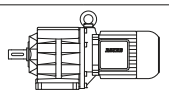

P_N	50 Hz			i	Type	m	F_{RN}	F_{RV}
	n_2	M_2	f_B					
[kW]	[1/min]	[Nm]	[—]	[:1]		[kg]	[N]	[N]
22	23	9100	1.7	63.49	**BG100-../DSE18LB4**	572	90000	-
22	21	10000	1.6	70.69	**BG100-../DSE18LB4**	572	90000	-
22	18.5	11300	1.45	80.85	**BG100-../DSE18LB4**	572	90000	-
22	16.5	12700	1.3	90.02	**BG100-../DSE18LB4**	572	90000	-
22	14	15000	1.1	107.5	**BG100-../DSE18LB4**	572	90000	-
22	12.5	16800	1.0	119.7	**BG100-../DSE18LB4**	572	90000	-
22	10.5	20000	0.84	139.1	**BG100-../DSE18LB4**	572	90000	-

30 kW

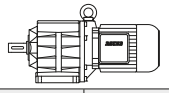

P_N	50 Hz			i	Type	m	F_{RN}	F_{RV}
	n_2	M_2	f_B					
[kW]	[1/min]	[Nm]	[—]	[:1]		[kg]	[N]	[N]
30	580	490	1.1	2.52	**BG60-../DSE18XB4**	247	6200	-
30	395	720	0.85	3.74	**BG60-../DSE18XB4**	247	7100	-
30	295	970	1.55	4.95	**BG70-../DSE18XB4**	275	6900	-
30	250	1140	1.55	5.87	**BG70-../DSE18XB4**	275	8200	-
30	205	1390	1.55	7.14	**BG70-../DSE18XB4**	275	8800	-
30	173	1650	1.4	8.48	**BG70-../DSE18XB4**	275	9500	-
30	145	1970	1.15	10.09	**BG70-../DSE18XB4**	275	10200	-
30	122	2300	1.0	11.97	**BG70-../DSE18XB4**	275	11200	-
30	112	2550	0.9	13.08	**BG70-../DSE18XB4**	275	11600	-
30	250	1140	2.3	5.94	**BG80-../DSE18XB4**	329	8300	-
30	225	1270	2.3	6.60	**BG80-../DSE18XB4**	329	9100	-
30	176	1620	2.3	8.30	**BG80-../DSE18XB4**	329	10400	-
30	159	1800	2.2	9.21	**BG80-../DSE18XB4**	329	10800	-
30	128	2200	1.9	11.43	**BG80-../DSE18XB4**	329	11600	-
30	116	2450	1.7	12.69	**BG80-../DSE18XB4**	329	12400	-
30	94	3000	1.4	15.62	**BG80-../DSE18XB4**	329	13700	-
30	85	3350	1.25	17.35	**BG80-../DSE18XB4**	329	14600	-
30	74	3850	1.1	19.89	**BG80-../DSE18XB4**	329	15500	-
30	67	4250	0.99	22.09	**BG80-../DSE18XB4**	329	16500	-
30	56	5100	0.82	26.44	**BG80-../DSE18XB4**	329	17900	-
30	134	2100	3.3	10.90	**BG90-../DSE18XB4**	420	52300	-
30	110	2600	2.9	13.37	**BG90-../DSE18XB4**	420	55000	-
30	100	2850	2.7	14.64	**BG90-../DSE18XB4**	420	57000	-
30	82	3450	2.4	17.96	**BG90-../DSE18XB4**	420	59800	-
30	75	3800	2.2	19.67	**BG90-../DSE18XB4**	420	62400	-
30	65	4400	1.9	22.62	**BG90-../DSE18XB4**	420	65000	-
30	59	4850	1.75	24.78	**BG90-../DSE18XB4**	420	65000	-
30	49.5	5700	1.45	29.78	**BG90-../DSE18XB4**	420	65000	-
30	45	6300	1.35	32.62	**BG90-../DSE18XB4**	420	65000	-
30	38.5	7400	1.15	38.21	**BG90-../DSE18XB4**	420	65000	-
30	35	8100	1.05	41.85	**BG90-../DSE18XB4**	420	65000	-
30	30	9500	0.88	48.82	**BG90-../DSE18XB4**	420	65000	-
30	27.5	10400	0.81	53.46	**BG90-../DSE18XB4**	420	65000	-
30	118	2400	3.0	12.45	**BG100-../DSE18XB4**	590	72100	-
30	84	3400	3.0	17.39	**BG100-../DSE18XB4**	590	82400	-
30	61	4650	2.4	23.95	**BG100-../DSE18XB4**	590	87900	-
30	43.5	6500	2.0	33.71	**BG100-../DSE18XB4**	590	88500	-
30	39	7300	1.8	37.54	**BG100-../DSE18XB4**	590	90000	-
30	31.5	9000	1.55	46.43	**BG100-../DSE18XB4**	590	90000	-
30	28.5	10000	1.45	51.70	**BG100-../DSE18XB4**	590	90000	-
30	23	12400	1.25	63.49	**BG100-../DSE18XB4**	590	90000	-
30	21	13600	1.15	70.69	**BG100-../DSE18XB4**	590	90000	-
30	18.5	15400	1.05	80.85	**BG100-../DSE18XB4**	590	90000	-
30	16.5	17300	0.97	90.02	**BG100-../DSE18XB4**	590	90000	-
30	14	20400	0.82	107.5	**BG100-../DSE18XB4**	590	90000	-

The torques marked (*) are maximum permissible torques for service factor f_B=1.0.

0.03 kW

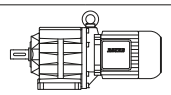

P_N	50 Hz			i	Type	m	F_{RN}	F_{RV}
	n_2	M_2	f_B					
[kW]	[1/min]	[Nm]	[—]	[:1]		[kg]	[N]	[N]
0.03	540	0.53	7.5	2.51	**BG04-../D04LA4**	4.4	340	-
0.03	370	0.77	6.5	3.65	**BG04-../D04LA4**	4.4	390	-
0.03	310	0.92	7.6	4.39	**BG04-../D04LA4**	4.4	380	-
0.03	255	1.12	8.0	5.36	**BG04-../D04LA4**	4.4	380	-
0.03	220	1.3	8.5	6.18	**BG04-../D04LA4**	4.4	415	-
0.03	205	1.39	7.2	6.67	**BG04-../D04LA4**	4.4	410	-
0.03	199	1.43	7.7	6.80	**BG04-../D04LA4**	4.4	420	-
0.03	158	1.81	6.1	8.58	**BG04-../D04LA4**	4.4	410	-
0.03	150	1.91	6.3	9.00	**BG04-../D04LA4**	4.4	470	-
0.03	137	2.05	6.3	9.90	**BG04-../D04LA4**	4.4	480	-
0.03	125	2.25	6.2	10.82	**BG04-../D04LA4**	4.4	480	-
0.03	114	2.5	6.0	11.90	**BG04-../D04LA4**	4.4	490	-
0.03	108	2.65	5.7	12.55	**BG04-../D04LA4**	4.4	490	-
0.03	103	2.75	5.8	13.20	**BG04-../D04LA4**	4.4	500	-
0.03	93	3.05	5.6	14.52	**BG04-../D04LA4**	4.4	510	-
0.03	83	3.45	5.2	16.44	**BG04-../D04LA4**	4.4	530	-
0.03	75	3.8	4.7	18.08	**BG04-../D04LA4**	4.4	540	-
0.03	64	4.45	4.3	21.12	**BG04-../D04LA4**	4.4	560	-
0.03	59	4.85	4.1	23.23	**BG04-../D04LA4**	4.4	600	-
0.03	56	5.1	3.9	24.45	**BG04-../D04LA4**	4.4	610	-
0.03	51	5.6	3.6	26.89	**BG04-../D04LA4**	4.4	650	-
0.03	44	6.5	3.1	30.91	**BG04-../D04LA4**	4.4	690	-
0.03	40	7.1	2.8	34.00	**BG04-../D04LA4**	4.4	720	-
0.03	38.5	7.4	2.7	35.35	**BG04-../D04LA4**	4.4	730	-
0.03	35	8.1	2.5	38.89	**BG04-../D04LA4**	4.4	750	-
0.03	32	8.9	2.2	42.24	**BG04-../D04LA4**	4.4	750	-
0.03	29.5	9.7	2.1	46.47	**BG04-../D04LA4**	4.4	750	-
0.03	28.5	10	2.0	47.52	**BG04-../D04LA4**	4.4	750	-
0.03	26	11	1.8	52.28	**BG04-../D04LA4**	4.4	750	-
0.03	25	11.4	1.75	54.97	**BG04-../D04LA4**	4.4	750	-
0.03	22.5	12.7	1.55	60.47	**BG04-../D04LA4**	4.4	750	-
0.03	31	9.2	3.3	43.57	**BG05-../D04LA4**	5.1	900	-
0.03	29	9.8	3.1	47.00	**BG05-../D04LA4**	5.1	930	-
0.03	26.5	10.8	2.8	51.27	**BG05-../D04LA4**	5.1	970	-
0.03	25.5	11.2	2.7	53.44	**BG05-../D04LA4**	5.1	980	-
0.03	23.5	12.1	2.5	58.30	**BG05-../D04LA4**	5.1	1000	-
0.03	18	13.8	2.9	75.99	**BG06G04-../D04LA4**	8.4	1070	-
0.03	16.5	15	2.9	82.89	**BG06G04-../D04LA4**	8.4	1070	-
0.03	15	16.5	2.7	93.00	**BG06G04-../D04LA4**	8.4	1070	-
0.03	13.5	18.4	2.4	101.5	**BG06G04-../D04LA4**	8.4	1070	-
0.03	11.5	21	2.1	122.0	**BG06G04-../D04LA4**	8.4	1070	-
0.03	9.1	26	1.75	149.0	**BG06G04-../D04LA4**	8.4	1070	-
0.03	7.3	33.5	1.35	185.4	**BG06G04-../D04LA4**	8.4	1070	-
0.03	5.4	46	0.98	250.2	**BG06G04-../D04LA4**	8.4	1070	-
0.03	5.0	50	0.9	275.2	**BG06G04-../D04LA4**	8.4	1070	-
0.03	4.1	45*	1.0	330.8	**BG06G04-../D04LA4**	8.4	1070	-
0.03	3.7	45*	1.0	367.0	**BG06G04-../D04LA4**	8.4	1070	-
0.03	3.0	45*	1.0	457.0	**BG06G04-../D04LA4**	8.4	1070	-
0.03	2.7	45*	1.0	502.6	**BG06G04-../D04LA4**	8.4	1070	-
0.03	2.3	45*	1.0	587.1	**BG06G04-../D04LA4**	8.4	1070	-
0.03	2.1	45*	1.0	645.8	**BG06G04-../D04LA4**	8.4	1070	-
0.03	1.9	45*	1.0	747.5	**BG06G04-../D04LA4**	8.4	1070	-
0.03	1.6	45*	1.0	859.3	**BG06G04-../D04LA4**	8.4	1070	-
0.03	1.5	45*	1.0	945.2	**BG06G04-../D04LA4**	8.4	1070	-
0.03	1.3	45*	1.0	1081	**BG06G04-../D04LA4**	8.4	1070	-
0.03	1.2	45*	1.0	1174	**BG06G04-../D04LA4**	8.4	1070	-
0.03	1.1	45*	1.0	1321	**BG06G04-../D04LA4**	8.4	1070	-
0.03	0.9	45*	1.0	1528	**BG06G04-../D04LA4**	8.4	1070	-
0.03	0.85	45*	1.0	1681	**BG06G04-../D04LA4**	8.4	1070	-
0.03	0.7	45*	1.0	1948	**BG06G04-../D04LA4**	8.4	1070	-
0.03	0.65	45*	1.0	2126	**BG06G04-../D04LA4**	8.4	1070	-
0.03	0.6	45*	1.0	2435	**BG06G04-../D04LA4**	8.4	1070	-
0.03	20.5	13.9	3.2	66.79	**BG06-../D04LA4**	6.1	1070	-
0.03	7.4	38.5	3.1	184.0	**BG10Z-../D04LA4**	11	2000	2800
0.03	7.0	40.5	3.0	194.6	**BG10Z-../D04LA4**	11	2000	2800
0.03	6.3	45	2.7	215.7	**BG10Z-../D04LA4**	11	2000	2800

The torques marked (*) are maximum permissible torques for service factor f_B=1,0.

0.03 kW

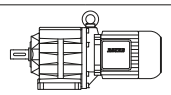

P_N	50 Hz			i	Type	m	F_{RN}	F_{RV}
	n_2	M_2	f_B					
[kW]	[1/min]	[Nm]	[—]	[:1]		[kg]	[N]	[N]
0.03	5.7	50	2.4	240.4	**BG10Z-../D04LA4**	11	2000	2800
0.03	5.1	56	2.1	266.3	**BG10Z-../D04LA4**	11	2000	2800
0.03	4.9	58	2.1	276.0	**BG10Z-../D04LA4**	11	2000	2800
0.03	4.5	63	1.9	305.8	**BG10Z-../D04LA4**	11	2000	2800
0.03	3.6	49	2.7	379.6	**BG10G06-../D04LA4**	14	2000	2800
0.03	3.1	57	2.3	435.9	**BG10G06-../D04LA4**	14	2000	2800
0.03	2.7	68	1.9	512.6	**BG10G06-../D04LA4**	14	2000	2800
0.03	2.3	83	1.55	613.6	**BG10G06-../D04LA4**	14	2000	2800
0.03	1.9	105	1.25	748.9	**BG10G06-../D04LA4**	14	2000	2800
0.03	1.6	130	1.0	899.5	**BG10G06-../D04LA4**	14	2000	2800
0.03	1.3	130*	1.0	1081	**BG10G06-../D04LA4**	14	2000	2800
0.03	1.1	130*	1.0	1272	**BG10G06-../D04LA4**	14	2000	2800
0.03	0.9	130*	1.0	1523	**BG10G06-../D04LA4**	14	2000	2800
0.03	0.75	130*	1.0	1863	**BG10G06-../D04LA4**	14	2000	2800
0.03	0.6	130*	1.0	2356	**BG10G06-../D04LA4**	14	2000	2800
0.03	0.55	130*	1.0	2699	**BG10G06-../D04LA4**	14	2000	2800
0.03	0.46	130*	1.0	2944	**BG10G06-../D04LA4**	14	2000	2800
0.03	0.4	130*	1.0	3378	**BG10G06-../D04LA4**	14	2000	2800
0.03	0.37	130*	1.0	3684	**BG10G06-../D04LA4**	14	2000	2800
0.03	0.31	130*	1.0	4477	**BG10G06-../D04LA4**	14	2000	2800
0.03	0.28	130*	1.0	4884	**BG10G06-../D04LA4**	14	2000	2800
0.03	2.5	77	2.9	550.6	**BG20G06-../D04LA4**	17	5000	2100
0.03	2.1	95	2.3	671.9	**BG20G06-../D04LA4**	17	5000	2100
0.03	1.7	125	1.75	807.1	**BG20G06-../D04LA4**	17	5000	2100
0.03	1.4	160	1.4	969.9	**BG20G06-../D04LA4**	17	5000	2100
0.03	1.2	188	1.15	1142	**BG20G06-../D04LA4**	17	5000	2100
0.03	1.0	230	0.96	1366	**BG20G06-../D04LA4**	17	5000	2100
0.03	0.85	220*	1.0	1672	**BG20G06-../D04LA4**	17	5000	2100
0.03	0.75	220*	1.0	1824	**BG20G06-../D04LA4**	17	5000	2100
0.03	0.65	220*	1.0	2114	**BG20G06-../D04LA4**	17	5000	2100
0.03	0.6	220*	1.0	2422	**BG20G06-../D04LA4**	17	5000	2100
0.03	0.55	220*	1.0	2642	**BG20G06-../D04LA4**	17	5000	2100
0.03	0.45	220*	1.0	3031	**BG20G06-../D04LA4**	17	5000	2100
0.03	0.41	220*	1.0	3306	**BG20G06-../D04LA4**	17	5000	2100
0.03	0.34	220*	1.0	4017	**BG20G06-../D04LA4**	17	5000	2100
0.03	0.31	220*	1.0	4383	**BG20G06-../D04LA4**	17	5000	2100
0.03	2.0	101	3.2	690.6	**BG30G06-../D04LA4**	21	6000	-
0.03	1.8	116	2.8	760.7	**BG30G06-../D04LA4**	21	6000	-
0.03	1.7	124	2.6	829.5	**BG30G06-../D04LA4**	21	6000	-
0.03	1.4	158	2.1	996.8	**BG30G06-../D04LA4**	21	6000	-
0.03	1.3	173	1.9	1088	**BG30G06-../D04LA4**	21	6000	-
0.03	1.1	205	1.6	1280	**BG30G06-../D04LA4**	21	6000	-
0.03	1.0	230	1.4	1404	**BG30G06-../D04LA4**	21	6000	-
0.03	0.8	295	1.1	1718	**BG30G06-../D04LA4**	21	6000	-
0.03	0.75	320	1.0	1875	**BG30G06-../D04LA4**	21	6000	-
0.03	0.65	325*	1.0	2173	**BG30G06-../D04LA4**	21	6000	-
0.03	0.5	325*	1.0	2715	**BG30G06-../D04LA4**	21	6000	-
0.03	0.44	325*	1.0	3115	**BG30G06-../D04LA4**	21	6000	-
0.03	0.4	325*	1.0	3398	**BG30G06-../D04LA4**	21	6000	-
0.03	0.35	325*	1.0	3867	**BG30G06-../D04LA4**	21	6000	-
0.03	0.3	325*	1.0	4504	**BG30G06-../D04LA4**	21	6000	-

0.04 kW

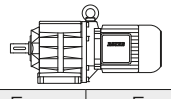

P_N	50 Hz			i	Type	m	F_{RN}	F_{RV}
	n_2	M_2	f_B					
[kW]	[1/min]	[Nm]	[—]	[:1]		[kg]	[N]	[N]
0.04	540	0.7	5.7	2.51	**BG04-../D04LA4**	4.4	340	-
0.04	370	1.03	4.9	3.65	**BG04-../D04LA4**	4.4	390	-
0.04	310	1.23	5.7	4.39	**BG04-../D04LA4**	4.4	380	-
0.04	255	1.49	6.0	5.36	**BG04-../D04LA4**	4.4	380	-
0.04	220	1.73	6.4	6.18	**BG04-../D04LA4**	4.4	415	-
0.04	205	1.86	5.4	6.67	**BG04-../D04LA4**	4.4	410	-
0.04	199	1.91	5.8	6.80	**BG04-../D04LA4**	4.4	420	-
0.04	158	2.4	4.6	8.58	**BG04-../D04LA4**	4.4	410	-

The torques marked (*) are maximum permissible torques for service factor f_B=1,0.

0.04 kW

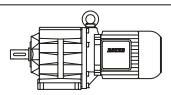

P_N	50 Hz			i	Type	m	F_{RN}	F_{RV}
	n_2	M_2	f_B					
[kW]	[1/min]	[Nm]	[—]	[:1]		[kg]	[N]	[N]
0.04	150	2.5	4.8	9.00	**BG04-../D04LA4**	4.4	470	-
0.04	137	2.75	4.7	9.90	**BG04-../D04LA4**	4.4	480	-
0.04	125	3.05	4.6	10.82	**BG04-../D04LA4**	4.4	480	-
0.04	114	3.35	4.5	11.90	**BG04-../D04LA4**	4.4	490	-
0.04	108	3.5	4.3	12.55	**BG04-../D04LA4**	4.4	490	-
0.04	103	3.7	4.3	13.20	**BG04-../D04LA4**	4.4	500	-
0.04	93	4.1	4.1	14.52	**BG04-../D04LA4**	4.4	510	-
0.04	83	4.6	3.9	16.44	**BG04-../D04LA4**	4.4	530	-
0.04	75	5.0	3.6	18.08	**BG04-../D04LA4**	4.4	540	-
0.04	64	5.9	3.2	21.12	**BG04-../D04LA4**	4.4	560	-
0.04	59	6.4	3.1	23.23	**BG04-../D04LA4**	4.4	600	-
0.04	56	6.8	2.9	24.45	**BG04-../D04LA4**	4.4	610	-
0.04	51	7.4	2.7	26.89	**BG04-../D04LA4**	4.4	650	-
0.04	44	8.6	2.3	30.91	**BG04-../D04LA4**	4.4	690	-
0.04	40	9.5	2.1	34.00	**BG04-../D04LA4**	4.4	720	-
0.04	38.5	9.9	2.0	35.35	**BG04-../D04LA4**	4.4	730	-
0.04	35	10.9	1.85	38.89	**BG04-../D04LA4**	4.4	750	-
0.04	32	11.9	1.7	42.24	**BG04-../D04LA4**	4.4	750	-
0.04	29.5	12.9	1.55	46.47	**BG04-../D04LA4**	4.4	750	-
0.04	28.5	13.4	1.5	47.52	**BG04-../D04LA4**	4.4	750	-
0.04	26	14.6	1.35	52.28	**BG04-../D04LA4**	4.4	750	-
0.04	25	15.2	1.3	54.97	**BG04-../D04LA4**	4.4	750	-
0.04	22.5	16.9	1.2	60.47	**BG04-../D04LA4**	4.4	750	-
0.04	39	9.7	3.1	35.00	**BG05-../D04LA4**	5.1	810	-
0.04	35.5	10.7	2.8	38.18	**BG05-../D04LA4**	5.1	850	-
0.04	34	11.2	2.7	39.94	**BG05-../D04LA4**	5.1	860	-
0.04	31	12.3	2.4	43.57	**BG05-../D04LA4**	5.1	900	-
0.04	29	13.1	2.3	47.00	**BG05-../D04LA4**	5.1	930	-
0.04	26.5	14.4	2.1	51.27	**BG05-../D04LA4**	5.1	970	-
0.04	25.5	14.9	2.0	53.44	**BG05-../D04LA4**	5.1	980	-
0.04	23.5	16.2	1.85	58.30	**BG05-../D04LA4**	5.1	1000	-
0.04	18	19.1	2.1	75.99	**BG06G04-../D04LA4**	8.4	1070	-
0.04	16.5	20.5	2.1	82.89	**BG06G04-../D04LA4**	8.4	1070	-
0.04	15	22.5	2.0	93.00	**BG06G04-../D04LA4**	8.4	1070	-
0.04	13.5	25.5	1.75	101.5	**BG06G04-../D04LA4**	8.4	1070	-
0.04	11.5	29	1.55	122.0	**BG06G04-../D04LA4**	8.4	1070	-
0.04	9.1	36.5	1.25	149.0	**BG06G04-../D04LA4**	8.4	1070	-
0.04	7.3	46.5	0.97	185.4	**BG06G04-../D04LA4**	8.4	1070	-
0.04	27	14.1	3.2	50.38	**BG06-../D04LA4**	6.1	940	-
0.04	26	14.6	3.1	52.56	**BG06-../D04LA4**	6.1	950	-
0.04	24	15.9	2.8	57.34	**BG06-../D04LA4**	6.1	1000	-
0.04	22.5	16.9	2.7	61.22	**BG06-../D04LA4**	6.1	1020	-
0.04	20.5	18.6	2.4	66.79	**BG06-../D04LA4**	6.1	1070	-
0.04	10.5	36	3.3	131.8	**BG10Z-../D04LA4**	11	2000	2800
0.04	9.3	41	2.9	146.0	**BG10Z-../D04LA4**	11	2000	2800
0.04	8.2	46.5	2.6	166.0	**BG10Z-../D04LA4**	11	2000	2800
0.04	7.4	51	2.4	184.0	**BG10Z-../D04LA4**	11	2000	2800
0.04	7.0	54	2.2	194.6	**BG10Z-../D04LA4**	11	2000	2800
0.04	6.3	60	2.0	215.7	**BG10Z-../D04LA4**	11	2000	2800
0.04	5.7	67	1.8	240.4	**BG10Z-../D04LA4**	11	2000	2800
0.04	5.1	74	1.6	266.3	**BG10Z-../D04LA4**	11	2000	2800
0.04	4.9	77	1.55	276.0	**BG10Z-../D04LA4**	11	2000	2800
0.04	4.5	84	1.45	305.8	**BG10Z-../D04LA4**	11	2000	2800
0.04	4.1	60	2.2	332.0	**BG10G06-../D04LA4**	14	2000	2800
0.04	3.6	75	1.75	379.6	**BG10G06-../D04LA4**	14	2000	2800
0.04	3.1	88	1.5	435.9	**BG10G06-../D04LA4**	14	2000	2800
0.04	2.7	103	1.25	512.6	**BG10G06-../D04LA4**	14	2000	2800
0.04	2.3	125	1.05	613.6	**BG10G06-../D04LA4**	14	2000	2800
0.04	1.9	155	0.84	748.9	**BG10G06-../D04LA4**	14	2000	2800
0.04	6.1	62	3.2	222.1	**BG20Z-../D04LA4**	13	5000	-
0.04	3.9	69	3.2	352.1	**BG20G06-../D04LA4**	17	5000	2100
0.04	3.5	77	2.9	391.1	**BG20G06-../D04LA4**	17	5000	2100
0.04	3.0	93	2.4	460.0	**BG20G06-../D04LA4**	17	5000	2100
0.04	2.5	116	1.9	550.6	**BG20G06-../D04LA4**	17	5000	2100
0.04	2.1	141	1.55	671.9	**BG20G06-../D04LA4**	17	5000	2100

The torques marked (*) are maximum permissible torques for service factor f_B=1,0.

0.04 kW

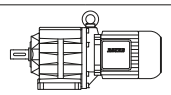

P_N	50 Hz			i	Type	m	F_{RN}	F_{RV}
	n_2	M_2	f_B					
[kW]	[1/min]	[Nm]	[—]	[:1]		[kg]	[N]	[N]
0.04	1.7	181	1.2	807.1	**BG20G06-../D04LA4**	17	5000	2100
0.04	1.4	225	0.98	969.9	**BG20G06-../D04LA4**	17	5000	2100
0.04	1.2	265	0.83	1142	**BG20G06-../D04LA4**	17	5000	2100
0.04	2.4	121	2.7	565.8	**BG30G06-../D04LA4**	21	6000	-
0.04	2.0	149	2.2	690.6	**BG30G06-../D04LA4**	21	6000	-
0.04	1.8	169	1.9	760.7	**BG30G06-../D04LA4**	21	6000	-
0.04	1.7	180	1.8	829.5	**BG30G06-../D04LA4**	21	6000	-
0.04	1.4	225	1.45	996.8	**BG30G06-../D04LA4**	21	6000	-
0.04	1.3	245	1.35	1088	**BG30G06-../D04LA4**	21	6000	-
0.04	1.1	290	1.1	1280	**BG30G06-../D04LA4**	21	6000	-
0.04	1.0	325	1.0	1404	**BG30G06-../D04LA4**	21	6000	-

0.06 kW

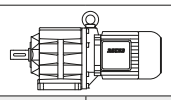

P_N	50 Hz			i	Type	m	F_{RN}	F_{RV}
	n_2	M_2	f_B					
[kW]	[1/min]	[Nm]	[—]	[:1]		[kg]	[N]	[N]
0.06	540	1.06	3.8	2.51	**BG04-../D04LA4**	4.4	340	-
0.06	370	1.54	3.2	3.65	**BG04-../D04LA4**	4.4	390	-
0.06	310	1.84	3.8	4.39	**BG04-../D04LA4**	4.4	380	-
0.06	255	2.2	4.1	5.36	**BG04-../D04LA4**	4.4	380	-
0.06	220	2.6	4.2	6.18	**BG04-../D04LA4**	4.4	415	-
0.06	205	2.75	3.6	6.67	**BG04-../D04LA4**	4.4	410	-
0.06	199	2.85	3.9	6.80	**BG04-../D04LA4**	4.4	420	-
0.06	158	3.6	3.1	8.58	**BG04-../D04LA4**	4.4	410	-
0.06	150	3.8	3.2	9.00	**BG04-../D04LA4**	4.4	470	-
0.06	137	4.15	3.1	9.90	**BG04-../D04LA4**	4.4	480	-
0.06	125	4.55	3.1	10.82	**BG04-../D04LA4**	4.4	480	-
0.06	114	5.0	3.0	11.90	**BG04-../D04LA4**	4.4	490	-
0.06	108	5.3	2.8	12.55	**BG04-../D04LA4**	4.4	490	-
0.06	103	5.5	2.9	13.20	**BG04-../D04LA4**	4.4	500	-
0.06	93	6.1	2.8	14.52	**BG04-../D04LA4**	4.4	510	-
0.06	83	6.9	2.6	16.44	**BG04-../D04LA4**	4.4	530	-
0.06	75	7.6	2.4	18.08	**BG04-../D04LA4**	4.4	540	-
0.06	64	8.9	2.1	21.12	**BG04-../D04LA4**	4.4	560	-
0.06	59	9.7	2.1	23.23	**BG04-../D04LA4**	4.4	600	-
0.06	56	10.2	1.95	24.45	**BG04-../D04LA4**	4.4	610	-
0.06	51	11.2	1.8	26.89	**BG04-../D04LA4**	4.4	650	-
0.06	44	13	1.55	30.91	**BG04-../D04LA4**	4.4	690	-
0.06	40	14.3	1.4	34.00	**BG04-../D04LA4**	4.4	720	-
0.06	38.5	14.8	1.35	35.35	**BG04-../D04LA4**	4.4	730	-
0.06	35	16.3	1.25	38.89	**BG04-../D04LA4**	4.4	750	-
0.06	32	17.9	1.1	42.24	**BG04-../D04LA4**	4.4	750	-
0.06	29.5	19.4	1.05	46.47	**BG04-../D04LA4**	4.4	750	-
0.06	28.5	20	1.0	47.52	**BG04-../D04LA4**	4.4	750	-
0.06	26	22	0.91	52.28	**BG04-../D04LA4**	4.4	750	-
0.06	25	22.5	0.89	54.97	**BG04-../D04LA4**	4.4	750	-
0.06	22.5	25	0.8	60.47	**BG04-../D04LA4**	4.4	750	-
0.06	72	7.9	3.3	18.82	**BG05-../D04LA4**	5.1	680	-
0.06	66	8.6	3.1	20.53	**BG05-../D04LA4**	5.1	700	-
0.06	57	10	2.8	24.00	**BG05-../D04LA4**	5.1	740	-
0.06	52	11	2.6	26.18	**BG05-../D04LA4**	5.1	760	-
0.06	49	11.6	2.6	27.82	**BG05-../D04LA4**	5.1	770	-
0.06	44.5	12.8	2.3	30.35	**BG05-../D04LA4**	5.1	760	-
0.06	39	14.6	2.1	35.00	**BG05-../D04LA4**	5.1	810	-
0.06	35.5	16.1	1.85	38.18	**BG05-../D04LA4**	5.1	850	-
0.06	34	16.8	1.8	39.94	**BG05-../D04LA4**	5.1	860	-
0.06	31	18.4	1.65	43.57	**BG05-../D04LA4**	5.1	900	-
0.06	29	19.7	1.5	47.00	**BG05-../D04LA4**	5.1	930	-
0.06	26.5	21.5	1.4	51.27	**BG05-../D04LA4**	5.1	970	-
0.06	25.5	22	1.35	53.44	**BG05-../D04LA4**	5.1	980	-
0.06	23.5	24	1.25	58.30	**BG05-../D04LA4**	5.1	1000	-
0.06	18	29.5	1.35	75.99	**BG06G04-../D04LA4**	8.4	1070	-
0.06	16.5	32	1.35	82.89	**BG06G04-../D04LA4**	8.4	1070	-

The torques marked (*) are maximum permissible torques for service factor f_B=1,0.

0.06 kW

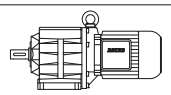

P_N	50 Hz			i	Type	m	F_{RN}	F_{RV}
	n_2	M_2	f_B					
[kW]	[1/min]	[Nm]	[—]	[:1]		[kg]	[N]	[N]
0.06	15	35.5	1.25	93.00	**BG06G04-../D04LA4**	8.4	1070	-
0.06	13.5	39.5	1.15	101.5	**BG06G04-../D04LA4**	8.4	1070	-
0.06	11.5	45.5	0.99	122.0	**BG06G04-../D04LA4**	8.4	1070	-
0.06	42	13.6	3.3	32.22	**BG06-../D04LA4**	6.1	890	-
0.06	38.5	14.8	3.0	35.15	**BG06-../D04LA4**	6.1	880	-
0.06	37	15.4	2.9	36.91	**BG06-../D04LA4**	6.1	890	-
0.06	34	16.8	2.7	40.26	**BG06-../D04LA4**	6.1	890	-
0.06	29.5	19.4	2.3	46.19	**BG06-../D04LA4**	6.1	890	-
0.06	27	21	2.1	50.38	**BG06-../D04LA4**	6.1	940	-
0.06	26	22	2.0	52.56	**BG06-../D04LA4**	6.1	950	-
0.06	24	23.5	1.9	57.34	**BG06-../D04LA4**	6.1	1000	-
0.06	22.5	25	1.8	61.22	**BG06-../D04LA4**	6.1	1020	-
0.06	20.5	27.5	1.65	66.79	**BG06-../D04LA4**	6.1	1070	-
0.06	15	38	3.2	92.19	**BG10Z-../D06LA4**	14	2000	2800
0.06	13.5	42	2.9	102.1	**BG10Z-../D06LA4**	14	2000	2800
0.06	12.5	45.5	2.6	109.8	**BG10Z-../D06LA4**	14	2000	2800
0.06	11.5	49.5	2.4	121.7	**BG10Z-../D06LA4**	14	2000	2800
0.06	10.5	54	2.2	131.8	**BG10Z-../D06LA4**	14	2000	2800
0.06	9.3	61	1.95	146.0	**BG10Z-../D06LA4**	14	2000	2800
0.06	8.2	69	1.75	166.0	**BG10Z-../D06LA4**	14	2000	2800
0.06	7.4	77	1.55	184.0	**BG10Z-../D06LA4**	14	2000	2800
0.06	7.0	81	1.5	194.6	**BG10Z-../D06LA4**	14	2000	2800
0.06	6.3	90	1.35	215.7	**BG10Z-../D06LA4**	14	2000	2800
0.06	5.7	100	1.2	240.4	**BG10Z-../D06LA4**	14	2000	2800
0.06	5.1	112	1.05	266.3	**BG10Z-../D06LA4**	14	2000	2800
0.06	4.9	116	1.05	276.0	**BG10Z-../D06LA4**	14	2000	2800
0.06	4.5	127	0.94	305.8	**BG10Z-../D06LA4**	14	2000	2800
0.06	4.1	107	1.2	332.0	**BG10G06-../D06LA4**	18	2000	2800
0.06	3.6	128	1.0	379.6	**BG10G06-../D06LA4**	18	2000	2800
0.06	3.1	149	0.87	435.9	**BG10G06-../D06LA4**	18	2000	2800
0.06	8.4	68	2.9	162.2	**BG20Z-../D06LA4**	16	5000	-
0.06	7.5	76	2.6	180.1	**BG20Z-../D06LA4**	16	5000	-
0.06	6.8	84	2.4	199.9	**BG20Z-../D06LA4**	16	5000	-
0.06	6.1	93	2.2	222.1	**BG20Z-../D06LA4**	16	5000	-
0.06	5.5	77	2.9	248.0	**BG20G06-../D06LA4**	20	5000	2100
0.06	4.6	95	2.3	297.9	**BG20G06-../D06LA4**	20	5000	2100
0.06	3.9	118	1.85	352.1	**BG20G06-../D06LA4**	20	5000	2100
0.06	3.5	132	1.65	391.1	**BG20G06-../D06LA4**	20	5000	2100
0.06	3.0	156	1.4	460.0	**BG20G06-../D06LA4**	20	5000	2100
0.06	2.5	192	1.15	550.6	**BG20G06-../D06LA4**	20	5000	2100
0.06	2.1	230	0.96	671.9	**BG20G06-../D06LA4**	20	5000	2100
0.06	6.0	95	3.2	225.9	**BG30Z-../D06LA4**	22	6000	-
0.06	5.2	110	2.7	261.9	**BG30Z-../D06LA4**	22	6000	-
0.06	4.7	121	2.5	290.5	**BG30Z-../D06LA4**	22	6000	-
0.06	3.9	118	2.8	346.8	**BG30G06-../D06LA4**	25	6000	-
0.06	3.4	136	2.4	401.9	**BG30G06-../D06LA4**	25	6000	-
0.06	2.9	162	2.0	472.8	**BG30G06-../D06LA4**	25	6000	-
0.06	2.4	200	1.65	565.8	**BG30G06-../D06LA4**	25	6000	-
0.06	2.0	240	1.35	690.6	**BG30G06-../D06LA4**	25	6000	-
0.06	1.8	275	1.2	760.7	**BG30G06-../D06LA4**	25	6000	-
0.06	1.7	290	1.1	829.5	**BG30G06-../D06LA4**	25	6000	-
0.06	1.4	360	0.9	996.8	**BG30G06-../D06LA4**	25	6000	-
0.06	1.3	390	0.83	1088	**BG30G06-../D06LA4**	25	6000	-
0.06	2.2	147	3.2	640.0	**BG40G10-../D06LA4**	43	7000	-
0.06	1.9	176	2.6	710.9	**BG40G10-../D06LA4**	43	7000	-
0.06	1.8	179	2.6	789.1	**BG40G10-../D06LA4**	43	7000	-
0.06	1.4	255	1.8	965.2	**BG40G10-../D06LA4**	43	7000	-
0.06	1.2	315	1.5	1225	**BG40G10-../D06LA4**	43	7000	-
0.06	0.95	440	1.05	1459	**BG40G10-../D06LA4**	43	7000	-
0.06	1.5	230	3.0	960.2	**BG50G10-../D06LA4**	51	10000	-
0.06	1.2	315	2.2	1219	**BG50G10-../D06LA4**	51	10000	-
0.06	0.95	445	1.55	1452	**BG50G10-../D06LA4**	51	10000	-
0.06	0.8	550	1.25	1729	**BG50G10-../D06LA4**	51	10000	-
0.06	0.7	660	1.05	2076	**BG50G10-../D06LA4**	51	10000	-

The torques marked (*) are maximum permissible torques for service factor f_B=1,0.

0.06 kW

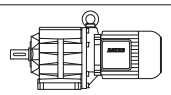

P_N	50 Hz			i	Type	m	F_{RN}	F_{RV}
	n_2	M_2	f_B					
[kW]	[1/min]	[Nm]	[—]	[:1]		[kg]	[N]	[N]
0.06	0.8	445	2.9	1741	**BG60G20-../D06LA4**	100	16000	-
0.06	0.75	490	2.7	1880	**BG60G20-../D06LA4**	100	16000	-
0.06	0.65	610	2.1	2249	**BG60G20-../D06LA4**	100	16000	-
0.06	0.48	920	1.4	2818	**BG60G20-../D06LA4**	100	16000	-
0.06	0.42	1090	1.2	3234	**BG60G20-../D06LA4**	100	16000	-
0.06	0.38	1230	1.05	3592	**BG60G20-../D06LA4**	100	16000	-
0.06	0.49	930	2.7	2774	**BG70G20-../D06LA4**	130	20000	-
0.06	0.43	1090	2.3	3184	**BG70G20-../D06LA4**	130	20000	-
0.06	0.35	1390	1.8	3925	**BG70G20-../D06LA4**	130	20000	-

0.09 kW

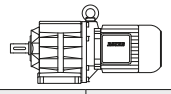

P_N	50 Hz			i	Type	m	F_{RN}	F_{RV}
	n_2	M_2	f_B					
[kW]	[1/min]	[Nm]	[—]	[:1]		[kg]	[N]	[N]
0.09	540	1.59	2.5	2.51	**BG04-../D04LA4**	4.4	340	-
0.09	370	2.3	2.2	3.65	**BG04-../D04LA4**	4.4	390	-
0.09	310	2.75	2.5	4.39	**BG04-../D04LA4**	4.4	380	-
0.09	255	3.35	2.7	5.36	**BG04-../D04LA4**	4.4	380	-
0.09	220	3.9	2.8	6.18	**BG04-../D04LA4**	4.4	415	-
0.09	205	4.15	2.4	6.67	**BG04-../D04LA4**	4.4	410	-
0.09	199	4.3	2.6	6.80	**BG04-../D04LA4**	4.4	420	-
0.09	158	5.4	2.0	8.58	**BG04-../D04LA4**	4.4	410	-
0.09	150	5.7	2.1	9.00	**BG04-../D04LA4**	4.4	470	-
0.09	137	6.2	2.1	9.90	**BG04-../D04LA4**	4.4	480	-
0.09	125	6.8	2.1	10.82	**BG04-../D04LA4**	4.4	480	-
0.09	114	7.5	2.0	11.90	**BG04-../D04LA4**	4.4	490	-
0.09	108	7.9	1.9	12.55	**BG04-../D04LA4**	4.4	490	-
0.09	103	8.3	1.95	13.20	**BG04-../D04LA4**	4.4	500	-
0.09	93	9.2	1.85	14.52	**BG04-../D04LA4**	4.4	510	-
0.09	83	10.3	1.75	16.44	**BG04-../D04LA4**	4.4	530	-
0.09	75	11.4	1.6	18.08	**BG04-../D04LA4**	4.4	540	-
0.09	64	13.4	1.4	21.12	**BG04-../D04LA4**	4.4	560	-
0.09	59	14.5	1.4	23.23	**BG04-../D04LA4**	4.4	600	-
0.09	56	15.3	1.3	24.45	**BG04-../D04LA4**	4.4	610	-
0.09	51	16.8	1.2	26.89	**BG04-../D04LA4**	4.4	650	-
0.09	44	19.5	1.05	30.91	**BG04-../D04LA4**	4.4	690	-
0.09	40	21	0.95	34.00	**BG04-../D04LA4**	4.4	720	-
0.09	38.5	22	0.91	35.35	**BG04-../D04LA4**	4.4	730	-
0.09	35	24.5	0.82	38.89	**BG04-../D04LA4**	4.4	750	-
0.09	128	6.7	3.0	10.59	**BG05-../D04LA4**	5.1	590	-
0.09	117	7.3	2.9	11.55	**BG05-../D04LA4**	5.1	600	-
0.09	113	7.6	2.8	12.05	**BG05-../D04LA4**	5.1	510	-
0.09	108	7.9	2.8	12.60	**BG05-../D04LA4**	5.1	610	-
0.09	99	8.6	2.7	13.75	**BG05-../D04LA4**	5.1	630	-
0.09	89	9.6	2.5	15.23	**BG05-../D04LA4**	5.1	640	-
0.09	82	10.4	2.4	16.62	**BG05-../D04LA4**	5.1	660	-
0.09	72	11.9	2.2	18.82	**BG05-../D04LA4**	5.1	680	-
0.09	66	13	2.1	20.53	**BG05-../D04LA4**	5.1	700	-
0.09	57	15	1.85	24.00	**BG05-../D04LA4**	5.1	740	-
0.09	52	16.5	1.75	26.18	**BG05-../D04LA4**	5.1	760	-
0.09	49	17.5	1.7	27.82	**BG05-../D04LA4**	5.1	770	-
0.09	44.5	19.3	1.55	30.35	**BG05-../D04LA4**	5.1	760	-
0.09	39	22	1.35	35.00	**BG05-../D04LA4**	5.1	810	-
0.09	35.5	24	1.25	38.18	**BG05-../D04LA4**	5.1	850	-
0.09	34	25	1.2	39.94	**BG05-../D04LA4**	5.1	860	-
0.09	31	27.5	1.1	43.57	**BG05-../D04LA4**	5.1	900	-
0.09	29	29.5	1.0	47.00	**BG05-../D04LA4**	5.1	930	-
0.09	26.5	32	0.94	51.27	**BG05-../D04LA4**	5.1	970	-
0.09	25.5	33.5	0.9	53.44	**BG05-../D04LA4**	5.1	980	-
0.09	23.5	36.5	0.82	58.30	**BG05-../D04LA4**	5.1	1000	-
0.09	18	45.5	0.88	75.99	**BG06G04-../D04LA4**	8.4	1070	-
0.09	16.5	49.5	0.87	82.89	**BG06G04-../D04LA4**	8.4	1070	-
0.09	15	54	0.83	93.00	**BG06G04-../D04LA4**	8.4	1070	-

The torques marked (*) are maximum permissible torques for service factor f_B=1,0.

0.09 kW

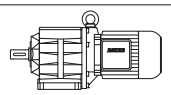

P_N	50 Hz			i	Type	m	F_{RN}	F_{RV}
	n_2	M_2	f_B					
[kW]	[1/min]	[Nm]	[—]	[:1]		[kg]	[N]	[N]
0.09	65	13.2	3.0	20.82	**BG06-../D04LA4**	6.1	800	-
0.09	60	14.3	3.0	22.71	**BG06-../D04LA4**	6.1	810	-
0.09	53	16.2	2.8	25.48	**BG06-../D04LA4**	6.1	850	-
0.09	49	17.5	2.6	27.80	**BG06-../D04LA4**	6.1	840	-
0.09	42	20	2.3	32.22	**BG06-../D04LA4**	6.1	890	-
0.09	38.5	22	2.0	35.15	**BG06-../D04LA4**	6.1	880	-
0.09	37	23	1.95	36.91	**BG06-../D04LA4**	6.1	890	-
0.09	34	25	1.8	40.26	**BG06-../D04LA4**	6.1	890	-
0.09	29.5	29	1.55	46.19	**BG06-../D04LA4**	6.1	890	-
0.09	27	31.5	1.45	50.38	**BG06-../D04LA4**	6.1	940	-
0.09	26	33	1.35	52.56	**BG06-../D04LA4**	6.1	950	-
0.09	24	35.5	1.25	57.34	**BG06-../D04LA4**	6.1	1000	-
0.09	22.5	38	1.2	61.22	**BG06-../D04LA4**	6.1	1020	-
0.09	20.5	41.5	1.1	66.79	**BG06-../D04LA4**	6.1	1070	-
0.09	23.5	36.5	3.3	57.48	**BG10-../D06LA4**	13	2000	2800
0.09	21.5	39.5	3.0	63.69	**BG10-../D06LA4**	13	2000	2800
0.09	20.5	41.5	2.9	66.00	**BG10-../D06LA4**	13	2000	2800
0.09	18.5	46	2.6	73.13	**BG10-../D06LA4**	13	2000	2800
0.09	17.5	49	2.4	77.40	**BG10Z-../D06LA4**	14	2000	2800
0.09	16	53	2.3	85.76	**BG10Z-../D06LA4**	14	2000	2800
0.09	15	57	2.1	92.19	**BG10Z-../D06LA4**	14	2000	2800
0.09	13.5	63	1.9	102.1	**BG10Z-../D06LA4**	14	2000	2800
0.09	12.5	68	1.75	109.8	**BG10Z-../D06LA4**	14	2000	2800
0.09	11.5	74	1.6	121.7	**BG10Z-../D06LA4**	14	2000	2800
0.09	10.5	81	1.5	131.8	**BG10Z-../D06LA4**	14	2000	2800
0.09	9.3	92	1.3	146.0	**BG10Z-../D06LA4**	14	2000	2800
0.09	8.2	104	1.15	166.0	**BG10Z-../D06LA4**	14	2000	2800
0.09	7.4	116	1.05	184.0	**BG10Z-../D06LA4**	14	2000	2800
0.09	7.0	122	0.98	194.6	**BG10Z-../D06LA4**	14	2000	2800
0.09	6.3	136	0.88	215.7	**BG10Z-../D06LA4**	14	2000	2800
0.09	5.7	150	0.8	240.4	**BG10Z-../D06LA4**	14	2000	2800
0.09	4.9	146	0.89	276.4	**BG10G06-../D06LA4**	18	2000	2800
0.09	13	66	3.0	104.7	**BG20Z-../D06LA4**	16	5000	-
0.09	12	71	2.8	112.8	**BG20Z-../D06LA4**	16	5000	-
0.09	11	78	2.6	125.3	**BG20Z-../D06LA4**	16	5000	-
0.09	9.6	89	2.2	141.3	**BG20Z-../D06LA4**	16	5000	-
0.09	8.4	102	1.95	162.2	**BG20Z-../D06LA4**	16	5000	-
0.09	7.5	114	1.75	180.1	**BG20Z-../D06LA4**	16	5000	-
0.09	6.8	126	1.6	199.9	**BG20Z-../D06LA4**	16	5000	-
0.09	6.1	140	1.45	222.1	**BG20Z-../D06LA4**	16	5000	-
0.09	5.5	130	1.7	248.0	**BG20G06-../D06LA4**	20	5000	2100
0.09	4.6	157	1.4	297.9	**BG20G06-../D06LA4**	20	5000	2100
0.09	3.9	192	1.15	352.1	**BG20G06-../D06LA4**	20	5000	2100
0.09	3.5	210	1.05	391.1	**BG20G06-../D06LA4**	20	5000	2100
0.09	3.0	250	0.88	460.0	**BG20G06-../D06LA4**	20	5000	2100
0.09	9.5	90	3.3	142.5	**BG30Z-../D06LA4**	22	6000	-
0.09	9.0	95	3.2	151.5	**BG30Z-../D06LA4**	22	6000	-
0.09	8.1	106	2.8	168.1	**BG30Z-../D06LA4**	22	6000	-
0.09	7.4	116	2.6	182.9	**BG30Z-../D06LA4**	22	6000	-
0.09	6.7	128	2.3	202.9	**BG30Z-../D06LA4**	22	6000	-
0.09	6.0	143	2.1	225.9	**BG30Z-../D06LA4**	22	6000	-
0.09	5.2	165	1.8	261.9	**BG30Z-../D06LA4**	22	6000	-
0.09	4.7	182	1.65	290.5	**BG30Z-../D06LA4**	22	6000	-
0.09	4.5	161	2.0	306.2	**BG30G06-../D06LA4**	25	6000	-
0.09	3.9	192	1.7	346.8	**BG30G06-../D06LA4**	25	6000	-
0.09	3.4	220	1.5	401.9	**BG30G06-../D06LA4**	25	6000	-
0.09	2.9	260	1.25	472.8	**BG30G06-../D06LA4**	25	6000	-
0.09	2.4	320	1.0	565.8	**BG30G06-../D06LA4**	25	6000	-
0.09	2.0	385	0.84	690.6	**BG30G06-../D06LA4**	25	6000	-
0.09	6.1	140	3.0	221.9	**BG40Z-../D06LA4**	38	7000	-
0.09	5.5	156	2.7	246.5	**BG40Z-../D06LA4**	38	7000	-
0.09	5.0	171	2.5	273.6	**BG40Z-../D06LA4**	38	7000	-
0.09	3.1	170	2.7	448.8	**BG40G10-../D06LA4**	43	7000	-
0.09	2.6	210	2.2	534.2	**BG40G10-../D06LA4**	43	7000	-
0.09	2.2	275	1.7	640.0	**BG40G10-../D06LA4**	43	7000	-
0.09	1.9	325	1.45	710.9	**BG40G10-../D06LA4**	43	7000	-

The torques marked (*) are maximum permissible torques for service factor f_B=1,0.

0.09 kW

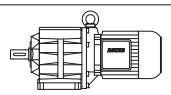

P_N	50 Hz			i	Type	m	F_{RN}	F_{RV}
	n_2	M_2	f_B					
[kW]	[1/min]	[Nm]	[—]	[:1]		[kg]	[N]	[N]
0.09	1.8	335	1.4	789.1	**BG40G10-../D06LA4**	43	7000	-
0.09	1.4	460	1.0	965.2	**BG40G10-../D06LA4**	43	7000	-
0.09	1.2	550	0.85	1225	**BG40G10-../D06LA4**	43	7000	-
0.09	2.6	210	3.3	531.5	**BG50G10-../D06LA4**	51	10000	-
0.09	2.2	280	2.5	621.3	**BG50G10-../D06LA4**	51	10000	-
0.09	2.0	300	2.3	708.3	**BG50G10-../D06LA4**	51	10000	-
0.09	1.8	335	2.1	785.1	**BG50G10-../D06LA4**	51	10000	-
0.09	1.5	420	1.65	960.2	**BG50G10-../D06LA4**	51	10000	-
0.09	1.2	550	1.25	1219	**BG50G10-../D06LA4**	51	10000	-
0.09	1.3	420	3.1	1051	**BG60G20-../D06LA4**	100	16000	-
0.09	1.2	465	2.8	1168	**BG60G20-../D06LA4**	100	16000	-
0.09	1.1	510	2.5	1346	**BG60G20-../D06LA4**	100	16000	-
0.09	0.95	630	2.1	1496	**BG60G20-../D06LA4**	100	16000	-
0.09	0.8	800	1.65	1741	**BG60G20-../D06LA4**	100	16000	-
0.09	0.75	870	1.5	1880	**BG60G20-../D06LA4**	100	16000	-
0.09	0.65	1050	1.25	2249	**BG60G20-../D06LA4**	100	16000	-
0.09	0.85	770	3.2	1666	**BG70G20-../D06LA4**	130	20000	-
0.09	0.7	980	2.6	1994	**BG70G20-../D06LA4**	130	20000	-
0.09	0.65	1080	2.3	2215	**BG70G20-../D06LA4**	130	20000	-
0.09	0.49	1510	1.65	2774	**BG70G20-../D06LA4**	130	20000	-
0.09	0.43	1750	1.45	3184	**BG70G20-../D06LA4**	130	20000	-
0.09	0.35	2200	1.15	3925	**BG70G20-../D06LA4**	130	20000	-

0.11 kW

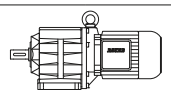

P_N	50 Hz			i	Type	m	F_{RN}	F_{RV}
	n_2	M_2	f_B					
[kW]	[1/min]	[Nm]	[—]	[:1]		[kg]	[N]	[N]
0.11	540	1.94	2.1	2.51	**BG04-../D04LA4**	4.4	340	-
0.11	370	2.8	1.8	3.65	**BG04-../D04LA4**	4.4	390	-
0.11	310	3.35	2.1	4.39	**BG04-../D04LA4**	4.4	380	-
0.11	255	4.1	2.2	5.36	**BG04-../D04LA4**	4.4	380	-
0.11	220	4.75	2.3	6.18	**BG04-../D04LA4**	4.4	415	-
0.11	205	5.1	1.95	6.67	**BG04-../D04LA4**	4.4	410	-
0.11	199	5.2	2.1	6.80	**BG04-../D04LA4**	4.4	420	-
0.11	158	6.6	1.65	8.58	**BG04-../D04LA4**	4.4	410	-
0.11	150	7.0	1.7	9.00	**BG04-../D04LA4**	4.4	470	-
0.11	137	7.6	1.7	9.90	**BG04-../D04LA4**	4.4	480	-
0.11	125	8.4	1.65	10.82	**BG04-../D04LA4**	4.4	480	-
0.11	114	9.2	1.65	11.90	**BG04-../D04LA4**	4.4	490	-
0.11	108	9.7	1.55	12.55	**BG04-../D04LA4**	4.4	490	-
0.11	103	10.1	1.6	13.20	**BG04-../D04LA4**	4.4	500	-
0.11	93	11.2	1.5	14.52	**BG04-../D04LA4**	4.4	510	-
0.11	83	12.6	1.45	16.44	**BG04-../D04LA4**	4.4	530	-
0.11	75	14	1.3	18.08	**BG04-../D04LA4**	4.4	540	-
0.11	64	16.4	1.15	21.12	**BG04-../D04LA4**	4.4	560	-
0.11	59	17.8	1.1	23.23	**BG04-../D04LA4**	4.4	600	-
0.11	56	18.7	1.05	24.45	**BG04-../D04LA4**	4.4	610	-
0.11	51	20.5	0.98	26.89	**BG04-../D04LA4**	4.4	650	-
0.11	44	23.5	0.85	30.91	**BG04-../D04LA4**	4.4	690	-
0.11	250	4.2	3.3	5.46	**BG05-../D04LA4**	5.1	490	-
0.11	205	5.1	3.3	6.64	**BG05-../D04LA4**	5.1	500	-
0.11	174	6.0	3.0	7.80	**BG05-../D04LA4**	5.1	530	-
0.11	166	6.3	2.9	8.15	**BG05-../D04LA4**	5.1	510	-
0.11	159	6.6	2.9	8.51	**BG05-../D04LA4**	5.1	550	-
0.11	128	8.2	2.4	10.59	**BG05-../D04LA4**	5.1	590	-
0.11	117	8.9	2.4	11.55	**BG05-../D04LA4**	5.1	600	-
0.11	113	9.2	2.3	12.05	**BG05-../D04LA4**	5.1	510	-
0.11	108	9.7	2.3	12.60	**BG05-../D04LA4**	5.1	610	-
0.11	99	10.6	2.2	13.75	**BG05-../D04LA4**	5.1	630	-
0.11	89	11.8	2.0	15.23	**BG05-../D04LA4**	5.1	640	-
0.11	82	12.8	1.95	16.62	**BG05-../D04LA4**	5.1	660	-
0.11	72	14.5	1.8	18.82	**BG05-../D04LA4**	5.1	680	-

The torques marked (*) are maximum permissible torques for service factor f_B=1,0.

0.11 kW

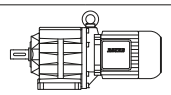

P_N	50 Hz			i	Type	m	F_{RN}	F_{RV}
	n_2	M_2	f_B					
[kW]	[1/min]	[Nm]	[—]	[:1]		[kg]	[N]	[N]
0.11	66	15.9	1.7	20.53	**BG05-../D04LA4**	5.1	700	-
0.11	57	18.4	1.5	24.00	**BG05-../D04LA4**	5.1	740	-
0.11	52	20	1.45	26.18	**BG05-../D04LA4**	5.1	760	-
0.11	49	21	1.45	27.82	**BG05-../D04LA4**	5.1	770	-
0.11	44.5	23.5	1.3	30.35	**BG05-../D04LA4**	5.1	760	-
0.11	39	26.5	1.15	35.00	**BG05-../D04LA4**	5.1	810	-
0.11	35.5	29.5	1.0	38.18	**BG05-../D04LA4**	5.1	850	-
0.11	34	30.5	0.98	39.94	**BG05-../D04LA4**	5.1	860	-
0.11	31	33.5	0.9	43.57	**BG05-../D04LA4**	5.1	900	-
0.11	29	36	0.83	47.00	**BG05-../D04LA4**	5.1	930	-
0.11	18	40*	1.0	75.99	**BG06G04-../D04LA4**	8.4	1070	-
0.11	16.5	43*	1.0	82.89	**BG06G04-../D04LA4**	8.4	1070	-
0.11	15	45*	1.0	93.00	**BG06G04-../D04LA4**	8.4	1070	-
0.11	13.5	45*	1.0	101.5	**BG06G04-../D04LA4**	8.4	1070	-
0.11	11.5	45*	1.0	122.0	**BG06G04-../D04LA4**	8.4	1070	-
0.11	9.1	45*	1.0	149.0	**BG06G04-../D04LA4**	8.4	1070	-
0.11	7.3	45*	1.0	185.4	**BG06G04-../D04LA4**	8.4	1070	-
0.11	5.4	45*	1.0	250.2	**BG06G04-../D04LA4**	8.4	1070	-
0.11	5.0	45*	1.0	275.2	**BG06G04-../D04LA4**	8.4	1070	-
0.11	4.1	45*	1.0	330.8	**BG06G04-../D04LA4**	8.4	1070	-
0.11	3.7	45*	1.0	367.0	**BG06G04-../D04LA4**	8.4	1070	-
0.11	3.0	45*	1.0	457.0	**BG06G04-../D04LA4**	8.4	1070	-
0.11	2.7	45*	1.0	502.6	**BG06G04-../D04LA4**	8.4	1070	-
0.11	2.3	45*	1.0	587.1	**BG06G04-../D04LA4**	8.4	1070	-
0.11	2.1	45*	1.0	645.8	**BG06G04-../D04LA4**	8.4	1070	-
0.11	1.9	45*	1.0	747.5	**BG06G04-../D04LA4**	8.4	1070	-
0.11	1.6	45*	1.0	859.3	**BG06G04-../D04LA4**	8.4	1070	-
0.11	1.5	45*	1.0	945.2	**BG06G04-../D04LA4**	8.4	1070	-
0.11	1.3	45*	1.0	1081	**BG06G04-../D04LA4**	8.4	1070	-
0.11	1.2	45*	1.0	1174	**BG06G04-../D04LA4**	8.4	1070	-
0.11	1.1	45*	1.0	1321	**BG06G04-../D04LA4**	8.4	1070	-
0.11	0.9	45*	1.0	1528	**BG06G04-../D04LA4**	8.4	1070	-
0.11	0.85	45*	1.0	1681	**BG06G04-../D04LA4**	8.4	1070	-
0.11	0.7	45*	1.0	1948	**BG06G04-../D04LA4**	8.4	1070	-
0.11	0.65	45*	1.0	2126	**BG06G04-../D04LA4**	8.4	1070	-
0.11	0.6	45*	1.0	2435	**BG06G04-../D04LA4**	8.4	1070	-
0.11	105	10	3.3	12.98	**BG06-../D04LA4**	6.1	600	-
0.11	92	11.4	3.0	14.78	**BG06-../D04LA4**	6.1	730	-
0.11	84	12.5	2.8	16.13	**BG06-../D04LA4**	6.1	740	-
0.11	78	13.4	2.8	17.40	**BG06-../D04LA4**	6.1	760	-
0.11	72	14.5	2.8	18.98	**BG06-../D04LA4**	6.1	770	-
0.11	65	16.1	2.5	20.82	**BG06-../D04LA4**	6.1	800	-
0.11	60	17.5	2.5	22.71	**BG06-../D04LA4**	6.1	810	-
0.11	53	19.8	2.3	25.48	**BG06-../D04LA4**	6.1	850	-
0.11	49	21	2.1	27.80	**BG06-../D04LA4**	6.1	840	-
0.11	42	25	1.8	32.22	**BG06-../D04LA4**	6.1	890	-
0.11	38.5	27	1.65	35.15	**BG06-../D04LA4**	6.1	880	-
0.11	37	28	1.6	36.91	**BG06-../D04LA4**	6.1	890	-
0.11	34	30.5	1.5	40.26	**BG06-../D04LA4**	6.1	890	-
0.11	29.5	35.5	1.25	46.19	**BG06-../D04LA4**	6.1	890	-
0.11	27	38.5	1.15	50.38	**BG06-../D04LA4**	6.1	940	-
0.11	26	40	1.15	52.56	**BG06-../D04LA4**	6.1	950	-
0.11	24	43.5	1.05	57.34	**BG06-../D04LA4**	6.1	1000	-
0.11	22.5	46.5	0.97	61.22	**BG06-../D04LA4**	6.1	1020	-
0.11	20.5	51	0.88	66.79	**BG06-../D04LA4**	6.1	1070	-
0.11	20	52	2.0	67.54	**BG10Z-../D04LA4**	11	2000	2800
0.11	17.5	60	2.0	77.40	**BG10Z-../D04LA4**	11	2000	2800
0.11	16	65	1.85	85.76	**BG10Z-../D04LA4**	11	2000	2800
0.11	15	70	1.7	92.19	**BG10Z-../D04LA4**	11	2000	2800
0.11	13.5	77	1.55	102.1	**BG10Z-../D04LA4**	11	2000	2800
0.11	12.5	84	1.45	109.8	**BG10Z-../D04LA4**	11	2000	2800
0.11	11.5	91	1.3	121.7	**BG10Z-../D04LA4**	11	2000	2800
0.11	10.5	100	1.2	131.8	**BG10Z-../D04LA4**	11	2000	2800
0.11	9.3	112	1.05	146.0	**BG10Z-../D04LA4**	11	2000	2800
0.11	8.2	128	0.94	166.0	**BG10Z-../D04LA4**	11	2000	2800
0.11	7.4	141	0.85	184.0	**BG10Z-../D04LA4**	11	2000	2800
0.11	7.0	150	0.8	194.6	**BG10Z-../D04LA4**	11	2000	2800

The torques marked (*) are maximum permissible torques for service factor f_B=1,0.

0.11 kW

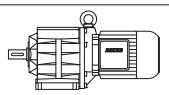

P_N	50 Hz			i	Type	m	F_{RN}	F_{RV}
	n_2	M_2	f_B					
[kW]	[1/min]	[Nm]	[—]	[:1]		[kg]	[N]	[N]
0.11	5.7	158	0.82	240.7	**BG10G06-../D04LA4**	14	2000	2800
0.11	4.9	130*	1.0	276.4	**BG10G06-../D04LA4**	14	2000	2800
0.11	4.1	130*	1.0	332.0	**BG10G06-../D04LA4**	14	2000	2800
0.11	3.6	130*	1.0	379.6	**BG10G06-../D04LA4**	14	2000	2800
0.11	3.1	130*	1.0	435.9	**BG10G06-../D04LA4**	14	2000	2800
0.11	2.7	130*	1.0	512.6	**BG10G06-../D04LA4**	14	2000	2800
0.11	2.3	130*	1.0	613.6	**BG10G06-../D04LA4**	14	2000	2800
0.11	1.9	130*	1.0	748.9	**BG10G06-../D04LA4**	14	2000	2800
0.11	1.6	130*	1.0	899.5	**BG10G06-../D04LA4**	14	2000	2800
0.11	1.3	130*	1.0	1081	**BG10G06-../D04LA4**	14	2000	2800
0.11	1.1	130*	1.0	1272	**BG10G06-../D04LA4**	14	2000	2800
0.11	0.9	130*	1.0	1523	**BG10G06-../D04LA4**	14	2000	2800
0.11	0.75	130*	1.0	1863	**BG10G06-../D04LA4**	14	2000	2800
0.11	0.6	130*	1.0	2356	**BG10G06-../D04LA4**	14	2000	2800
0.11	0.55	130*	1.0	2699	**BG10G06-../D04LA4**	14	2000	2800
0.11	0.46	130*	1.0	2944	**BG10G06-../D04LA4**	14	2000	2800
0.11	0.4	130*	1.0	3378	**BG10G06-../D04LA4**	14	2000	2800
0.11	0.37	130*	1.0	3684	**BG10G06-../D04LA4**	14	2000	2800
0.11	0.31	130*	1.0	4477	**BG10G06-../D04LA4**	14	2000	2800
0.11	0.28	130*	1.0	4884	**BG10G06-../D04LA4**	14	2000	2800
0.11	17.5	60	3.3	78.60	**BG20Z-../D04LA4**	13	5000	-
0.11	15.5	67	3.0	87.30	**BG20Z-../D04LA4**	13	5000	-
0.11	14.5	72	2.8	94.27	**BG20Z-../D04LA4**	13	5000	-
0.11	13	80	2.5	104.7	**BG20Z-../D04LA4**	13	5000	-
0.11	12	87	2.3	112.8	**BG20Z-../D04LA4**	13	5000	-
0.11	11	95	2.1	125.3	**BG20Z-../D04LA4**	13	5000	-
0.11	9.6	109	1.85	141.3	**BG20Z-../D04LA4**	13	5000	-
0.11	8.4	125	1.6	162.2	**BG20Z-../D04LA4**	13	5000	-
0.11	7.5	140	1.45	180.1	**BG20Z-../D04LA4**	13	5000	-
0.11	6.8	154	1.3	199.9	**BG20Z-../D04LA4**	13	5000	-
0.11	6.1	172	1.15	222.1	**BG20Z-../D04LA4**	13	5000	-
0.11	5.5	164	1.35	248.0	**BG20G06-../D04LA4**	17	5000	2100
0.11	4.6	199	1.1	297.9	**BG20G06-../D04LA4**	17	5000	2100
0.11	3.9	240	0.92	352.1	**BG20G06-../D04LA4**	17	5000	2100
0.11	3.5	265	0.83	391.1	**BG20G06-../D04LA4**	17	5000	2100
0.11	3.0	220*	1.0	460.0	**BG20G06-../D04LA4**	17	5000	2100
0.11	2.5	220*	1.0	550.6	**BG20G06-../D04LA4**	17	5000	2100
0.11	2.1	220*	1.0	671.9	**BG20G06-../D04LA4**	17	5000	2100
0.11	1.7	220*	1.0	807.1	**BG20G06-../D04LA4**	17	5000	2100
0.11	1.4	220*	1.0	969.9	**BG20G06-../D04LA4**	17	5000	2100
0.11	1.2	220*	1.0	1142	**BG20G06-../D04LA4**	17	5000	2100
0.11	1.0	220*	1.0	1366	**BG20G06-../D04LA4**	17	5000	2100
0.11	0.85	220*	1.0	1672	**BG20G06-../D04LA4**	17	5000	2100
0.11	0.75	220*	1.0	1824	**BG20G06-../D04LA4**	17	5000	2100
0.11	0.65	220*	1.0	2114	**BG20G06-../D04LA4**	17	5000	2100
0.11	0.6	220*	1.0	2422	**BG20G06-../D04LA4**	17	5000	2100
0.11	0.55	220*	1.0	2642	**BG20G06-../D04LA4**	17	5000	2100
0.11	0.45	220*	1.0	3031	**BG20G06-../D04LA4**	17	5000	2100
0.11	0.41	220*	1.0	3306	**BG20G06-../D04LA4**	17	5000	2100
0.11	0.34	220*	1.0	4017	**BG20G06-../D04LA4**	17	5000	2100
0.11	0.31	220*	1.0	4383	**BG20G06-../D04LA4**	17	5000	2100
0.11	5.3	171	1.9	254.9	**BG30G06-../D04LA4**	21	6000	-
0.11	4.5	200	1.65	306.2	**BG30G06-../D04LA4**	21	6000	-
0.11	3.9	240	1.35	346.8	**BG30G06-../D04LA4**	21	6000	-
0.11	3.4	275	1.2	401.9	**BG30G06-../D04LA4**	21	6000	-
0.11	2.9	325	1.0	472.8	**BG30G06-../D04LA4**	21	6000	-
0.11	2.4	395	0.82	565.8	**BG30G06-../D04LA4**	21	6000	-
0.11	2.0	325*	1.0	690.6	**BG30G06-../D04LA4**	21	6000	-
0.11	1.8	325*	1.0	760.7	**BG30G06-../D04LA4**	21	6000	-
0.11	1.7	325*	1.0	829.5	**BG30G06-../D04LA4**	21	6000	-
0.11	1.4	325*	1.0	996.8	**BG30G06-../D04LA4**	21	6000	-
0.11	1.3	325*	1.0	1088	**BG30G06-../D04LA4**	21	6000	-
0.11	1.1	325*	1.0	1280	**BG30G06-../D04LA4**	21	6000	-
0.11	1.0	325*	1.0	1404	**BG30G06-../D04LA4**	21	6000	-
0.11	0.8	325*	1.0	1718	**BG30G06-../D04LA4**	21	6000	-
0.11	0.75	325*	1.0	1875	**BG30G06-../D04LA4**	21	6000	-
0.11	0.65	325*	1.0	2173	**BG30G06-../D04LA4**	21	6000	-
0.11	0.5	325*	1.0	2715	**BG30G06-../D04LA4**	21	6000	-

The torques marked (*) are maximum permissible torques for service factor f_B=1,0.

0.11 kW

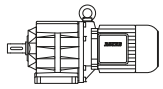

P_N	50 Hz			i	Type	m	F_{RN}	F_{RV}
	n_2	M_2	f_B					
[kW]	[1/min]	[Nm]	[—]	[:1]		[kg]	[N]	[N]
0.11	0.44	325*	1.0	3115	**BG30G06-../D04LA4**	21	6000	-
0.11	0.4	325*	1.0	3398	**BG30G06-../D04LA4**	21	6000	-
0.11	0.35	325*	1.0	3867	**BG30G06-../D04LA4**	21	6000	-
0.11	0.3	325*	1.0	4504	**BG30G06-../D04LA4**	21	6000	-

0.12 kW

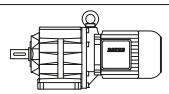

P_N	50 Hz			i	Type	m	F_{RN}	F_{RV}
	n_2	M_2	f_B					
[kW]	[1/min]	[Nm]	[—]	[:1]		[kg]	[N]	[N]
0.12	530	2.15	4.2	2.64	**BG05-../DHE05LA4**	7.0	420	-
0.12	415	2.75	3.6	3.38	**BG05-../DHE05LA4**	7.0	460	-
0.12	305	3.75	3.2	4.59	**BG05-../DHE05LA4**	7.0	490	-
0.12	255	4.45	3.1	5.46	**BG05-../DHE05LA4**	7.0	490	-
0.12	230	4.95	3.4	6.09	**BG05-../DHE05LA4**	7.0	480	-
0.12	215	5.3	3.0	6.60	**BG05-../DHE05LA4**	7.0	510	-
0.12	210	5.4	3.1	6.64	**BG05-../DHE05LA4**	7.0	500	-
0.12	179	6.4	2.8	7.80	**BG05-../DHE05LA4**	7.0	530	-
0.12	171	6.7	2.7	8.15	**BG05-../DHE05LA4**	7.0	510	-
0.12	164	6.9	2.8	8.51	**BG05-../DHE05LA4**	7.0	550	-
0.12	132	8.6	2.3	10.59	**BG05-../DHE05LA4**	7.0	590	-
0.12	121	9.4	2.2	11.55	**BG05-../DHE05LA4**	7.0	600	-
0.12	116	9.8	2.1	12.05	**BG05-../DHE05LA4**	7.0	510	-
0.12	111	10.3	2.1	12.60	**BG05-../DHE05LA4**	7.0	610	-
0.12	102	11.2	2.1	13.75	**BG05-../DHE05LA4**	7.0	630	-
0.12	92	12.4	1.95	15.23	**BG05-../DHE05LA4**	7.0	640	-
0.12	84	13.6	1.85	16.62	**BG05-../DHE05LA4**	7.0	660	-
0.12	74	15.4	1.7	18.82	**BG05-../DHE05LA4**	7.0	680	-
0.12	68	16.8	1.6	20.53	**BG05-../DHE05LA4**	7.0	700	-
0.12	58	19.7	1.4	24.00	**BG05-../DHE05LA4**	7.0	740	-
0.12	54	21	1.4	26.18	**BG05-../DHE05LA4**	7.0	760	-
0.12	50	22.5	1.35	27.82	**BG05-../DHE05LA4**	7.0	770	-
0.12	46	24.5	1.2	30.35	**BG05-../DHE05LA4**	7.0	760	-
0.12	40	28.5	1.05	35.00	**BG05-../DHE05LA4**	7.0	810	-
0.12	36.5	31	0.97	38.18	**BG05-../DHE05LA4**	7.0	850	-
0.12	35	32.5	0.92	39.94	**BG05-../DHE05LA4**	7.0	860	-
0.12	32	35.5	0.85	43.57	**BG05-../DHE05LA4**	7.0	900	-
0.12	114	10	3.3	12.30	**BG06-../DHE05LA4**	8.0	670	-
0.12	108	10.6	3.1	12.98	**BG06-../DHE05LA4**	8.0	600	-
0.12	95	12	2.8	14.78	**BG06-../DHE05LA4**	8.0	730	-
0.12	87	13.1	2.7	16.13	**BG06-../DHE05LA4**	8.0	740	-
0.12	80	14.3	2.7	17.40	**BG06-../DHE05LA4**	8.0	760	-
0.12	74	15.4	2.6	18.98	**BG06-../DHE05LA4**	8.0	770	-
0.12	67	17.1	2.3	20.82	**BG06-../DHE05LA4**	8.0	800	-
0.12	62	18.4	2.3	22.71	**BG06-../DHE05LA4**	8.0	810	-
0.12	55	20.5	2.2	25.48	**BG06-../DHE05LA4**	8.0	850	-
0.12	50	22.5	2.0	27.80	**BG06-../DHE05LA4**	8.0	840	-
0.12	43.5	26	1.75	32.22	**BG06-../DHE05LA4**	8.0	890	-
0.12	40	28.5	1.6	35.15	**BG06-../DHE05LA4**	8.0	880	-
0.12	38	30	1.5	36.91	**BG06-../DHE05LA4**	8.0	890	-
0.12	35	32.5	1.4	40.26	**BG06-../DHE05LA4**	8.0	890	-
0.12	30.5	37.5	1.2	46.19	**BG06-../DHE05LA4**	8.0	890	-
0.12	28	40.5	1.1	50.38	**BG06-../DHE05LA4**	8.0	940	-
0.12	26.5	43	1.05	52.56	**BG06-../DHE05LA4**	8.0	950	-
0.12	24.5	46.5	0.97	57.34	**BG06-../DHE05LA4**	8.0	1000	-
0.12	23	49.5	0.91	61.22	**BG06-../DHE05LA4**	8.0	1020	-
0.12	21	54	0.83	66.79	**BG06-../DHE05LA4**	8.0	1070	-
0.12	31.5	36	3.3	43.99	**BG10-../DHE06LA4**	13	1880	2600
0.12	30	38	3.2	46.55	**BG10-../DHE06LA4**	13	1920	2650
0.12	27	42	2.9	51.57	**BG10-../DHE06LA4**	13	2000	2800
0.12	24.5	46.5	2.6	57.48	**BG10-../DHE06LA4**	13	2000	2800
0.12	22	52	2.3	63.69	**BG10-../DHE06LA4**	13	2000	2800
0.12	21	54	2.2	66.00	**BG10-../DHE06LA4**	13	2000	2800
0.12	19	60	2.0	73.13	**BG10-../DHE06LA4**	13	2000	2800
0.12	18	63	1.9	77.40	**BG10Z-../DHE06LA4**	14	2000	2800

The torques marked (*) are maximum permissible torques for service factor f_B=1,0.

0.12 kW

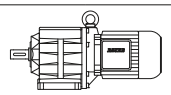

P_N	50 Hz			i	Type	m	F_{RN}	F_{RV}
	n_2	M_2	f_B					
[kW]	[1/min]	[Nm]	[—]	[:1]		[kg]	[N]	[N]
0.12	16.5	69	1.75	85.76	**BG10Z-../DHE06LA4**	14	2000	2800
0.12	15.5	73	1.65	92.19	**BG10Z-../DHE06LA4**	14	2000	2800
0.12	14	81	1.5	102.1	**BG10Z-../DHE06LA4**	14	2000	2800
0.12	13	88	1.35	109.8	**BG10Z-../DHE06LA4**	14	2000	2800
0.12	11.5	99	1.2	121.7	**BG10Z-../DHE06LA4**	14	2000	2800
0.12	11	104	1.15	131.8	**BG10Z-../DHE06LA4**	14	2000	2800
0.12	9.5	120	1.0	146.0	**BG10Z-../DHE06LA4**	14	2000	2800
0.12	8.4	136	0.88	166.0	**BG10Z-../DHE06LA4**	14	2000	2800
0.12	7.6	150	0.8	184.0	**BG10Z-../DHE06LA4**	14	2000	2800
0.12	7.2	138	0.94	194.9	**BG10G06-../DHE06LA4**	18	2000	2800
0.12	5.8	130*	1.0	240.7	**BG10G06-../DHE06LA4**	18	2000	2800
0.12	5.1	130*	1.0	276.4	**BG10G06-../DHE06LA4**	18	2000	2800
0.12	4.2	130*	1.0	332.0	**BG10G06-../DHE06LA4**	18	2000	2800
0.12	3.7	130*	1.0	379.6	**BG10G06-../DHE06LA4**	18	2000	2800
0.12	3.2	130*	1.0	435.9	**BG10G06-../DHE06LA4**	18	2000	2800
0.12	2.8	130*	1.0	512.6	**BG10G06-../DHE06LA4**	18	2000	2800
0.12	2.3	130*	1.0	613.6	**BG10G06-../DHE06LA4**	18	2000	2800
0.12	1.9	130*	1.0	748.9	**BG10G06-../DHE06LA4**	18	2000	2800
0.12	1.6	130*	1.0	899.5	**BG10G06-../DHE06LA4**	18	2000	2800
0.12	1.3	130*	1.0	1081	**BG10G06-../DHE06LA4**	18	2000	2800
0.12	1.1	130*	1.0	1272	**BG10G06-../DHE06LA4**	18	2000	2800
0.12	0.95	130*	1.0	1523	**BG10G06-../DHE06LA4**	18	2000	2800
0.12	0.75	130*	1.0	1863	**BG10G06-../DHE06LA4**	18	2000	2800
0.12	0.6	130*	1.0	2356	**BG10G06-../DHE06LA4**	18	2000	2800
0.12	0.55	130*	1.0	2699	**BG10G06-../DHE06LA4**	18	2000	2800
0.12	0.48	130*	1.0	2944	**BG10G06-../DHE06LA4**	18	2000	2800
0.12	0.42	130*	1.0	3378	**BG10G06-../DHE06LA4**	18	2000	2800
0.12	0.38	130*	1.0	3684	**BG10G06-../DHE06LA4**	18	2000	2800
0.12	0.31	130*	1.0	4477	**BG10G06-../DHE06LA4**	18	2000	2800
0.12	0.29	130*	1.0	4884	**BG10G06-../DHE06LA4**	18	2000	2800
0.12	18	63	3.2	78.60	**BG20Z-../DHE06LA4**	16	5000	-
0.12	16	71	2.8	87.30	**BG20Z-../DHE06LA4**	16	5000	-
0.12	15	76	2.6	94.27	**BG20Z-../DHE06LA4**	16	5000	-
0.12	13.5	84	2.4	104.7	**BG20Z-../DHE06LA4**	16	5000	-
0.12	12.5	91	2.2	112.8	**BG20Z-../DHE06LA4**	16	5000	-
0.12	11.5	99	2.0	125.3	**BG20Z-../DHE06LA4**	16	5000	-
0.12	9.9	115	1.75	141.3	**BG20Z-../DHE06LA4**	16	5000	-
0.12	8.6	133	1.5	162.2	**BG20Z-../DHE06LA4**	16	5000	-
0.12	7.7	148	1.35	180.1	**BG20Z-../DHE06LA4**	16	5000	-
0.12	7.0	163	1.25	199.9	**BG20Z-../DHE06LA4**	16	5000	-
0.12	6.3	181	1.1	222.1	**BG20Z-../DHE06LA4**	16	5000	-
0.12	5.6	178	1.25	248.0	**BG20G06-../DHE06LA4**	20	5000	2100
0.12	4.7	210	1.05	297.9	**BG20G06-../DHE06LA4**	20	5000	2100
0.12	4.0	255	0.86	352.1	**BG20G06-../DHE06LA4**	20	5000	2100
0.12	3.6	220*	1.0	391.1	**BG20G06-../DHE06LA4**	20	5000	2100
0.12	3.1	220*	1.0	460.0	**BG20G06-../DHE06LA4**	20	5000	2100
0.12	2.6	220*	1.0	550.6	**BG20G06-../DHE06LA4**	20	5000	2100
0.12	2.1	220*	1.0	671.9	**BG20G06-../DHE06LA4**	20	5000	2100
0.12	1.8	220*	1.0	807.1	**BG20G06-../DHE06LA4**	20	5000	2100
0.12	1.5	220*	1.0	969.9	**BG20G06-../DHE06LA4**	20	5000	2100
0.12	1.3	220*	1.0	1142	**BG20G06-../DHE06LA4**	20	5000	2100
0.12	1.1	220*	1.0	1366	**BG20G06-../DHE06LA4**	20	5000	2100
0.12	0.85	220*	1.0	1672	**BG20G06-../DHE06LA4**	20	5000	2100
0.12	0.8	220*	1.0	1824	**BG20G06-../DHE06LA4**	20	5000	2100
0.12	0.7	220*	1.0	2114	**BG20G06-../DHE06LA4**	20	5000	2100
0.12	0.6	220*	1.0	2422	**BG20G06-../DHE06LA4**	20	5000	2100
0.12	0.55	220*	1.0	2642	**BG20G06-../DHE06LA4**	20	5000	2100
0.12	0.46	220*	1.0	3031	**BG20G06-../DHE06LA4**	20	5000	2100
0.12	0.42	220*	1.0	3306	**BG20G06-../DHE06LA4**	20	5000	2100
0.12	0.35	220*	1.0	4017	**BG20G06-../DHE06LA4**	20	5000	2100
0.12	0.32	220*	1.0	4383	**BG20G06-../DHE06LA4**	20	5000	2100
0.12	11.5	99	3.0	121.6	**BG30Z-../DHE06LA4**	22	6000	-
0.12	11	104	2.9	128.5	**BG30Z-../DHE06LA4**	22	6000	-
0.12	9.8	116	2.6	142.5	**BG30Z-../DHE06LA4**	22	6000	-
0.12	9.2	124	2.4	151.5	**BG30Z-../DHE06LA4**	22	6000	-
0.12	8.3	138	2.2	168.1	**BG30Z-../DHE06LA4**	22	6000	-
0.12	7.6	150	2.0	182.9	**BG30Z-../DHE06LA4**	22	6000	-
0.12	6.9	166	1.8	202.9	**BG30Z-../DHE06LA4**	22	6000	-

The torques marked (*) are maximum permissible torques for service factor f_B=1,0.

0.12 kW

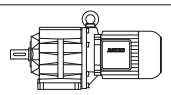

P_N	50 Hz			i	Type	m	F_{RN}	F_{RV}
	n_2	M_2	f_B					
[kW]	[1/min]	[Nm]	[—]	[:1]		[kg]	[N]	[N]
0.12	6.2	184	1.65	225.9	**BG30Z-../DHE06LA4**	22	6000	-
0.12	5.6	200	1.5	250.6	**BG30Z-../DHE06LA4**	22	6000	-
0.12	5.3	215	1.4	261.9	**BG30Z-../DHE06LA4**	22	6000	-
0.12	4.8	235	1.3	290.5	**BG30Z-../DHE06LA4**	22	6000	-
0.12	4.6	215	1.5	306.2	**BG30G06-../DHE06LA4**	25	6000	-
0.12	4.0	255	1.25	346.8	**BG30G06-../DHE06LA4**	25	6000	-
0.12	3.5	295	1.1	401.9	**BG30G06-../DHE06LA4**	25	6000	-
0.12	3.0	345	0.94	472.8	**BG30G06-../DHE06LA4**	25	6000	-
0.12	2.5	325*	1.0	565.8	**BG30G06-../DHE06LA4**	25	6000	-
0.12	2.1	325*	1.0	690.6	**BG30G06-../DHE06LA4**	25	6000	-
0.12	1.9	325*	1.0	760.7	**BG30G06-../DHE06LA4**	25	6000	-
0.12	1.7	325*	1.0	829.5	**BG30G06-../DHE06LA4**	25	6000	-
0.12	1.4	325*	1.0	996.8	**BG30G06-../DHE06LA4**	25	6000	-
0.12	1.3	325*	1.0	1088	**BG30G06-../DHE06LA4**	25	6000	-
0.12	1.1	325*	1.0	1280	**BG30G06-../DHE06LA4**	25	6000	-
0.12	1.0	325*	1.0	1404	**BG30G06-../DHE06LA4**	25	6000	-
0.12	0.85	325*	1.0	1718	**BG30G06-../DHE06LA4**	25	6000	-
0.12	0.75	325*	1.0	1875	**BG30G06-../DHE06LA4**	25	6000	-
0.12	0.65	325*	1.0	2173	**BG30G06-../DHE06LA4**	25	6000	-
0.12	0.55	325*	1.0	2715	**BG30G06-../DHE06LA4**	25	6000	-
0.12	0.45	325*	1.0	3115	**BG30G06-../DHE06LA4**	25	6000	-
0.12	0.41	325*	1.0	3398	**BG30G06-../DHE06LA4**	25	6000	-
0.12	0.36	325*	1.0	3867	**BG30G06-../DHE06LA4**	25	6000	-
0.12	0.31	325*	1.0	4504	**BG30G06-../DHE06LA4**	25	6000	-
0.12	8.9	128	3.3	156.9	**BG40Z-../DHE06LA4**	38	7000	-
0.12	8.4	136	3.1	166.1	**BG40Z-../DHE06LA4**	38	7000	-
0.12	7.6	150	2.8	184.4	**BG40Z-../DHE06LA4**	38	7000	-
0.12	7.0	163	2.6	199.9	**BG40Z-../DHE06LA4**	38	7000	-
0.12	6.3	181	2.3	221.9	**BG40Z-../DHE06LA4**	38	7000	-
0.12	5.7	200	2.1	246.5	**BG40Z-../DHE06LA4**	38	7000	-
0.12	5.1	220	1.95	273.6	**BG40Z-../DHE06LA4**	38	7000	-
0.12	4.8	148	3.1	288.6	**BG40G10-../DHE06LA4**	43	7000	-
0.12	4.0	187	2.5	353.5	**BG40G10-../DHE06LA4**	43	7000	-
0.12	3.1	260	1.8	448.8	**BG40G10-../DHE06LA4**	43	7000	-
0.12	2.6	320	1.45	534.2	**BG40G10-../DHE06LA4**	43	7000	-
0.12	2.2	405	1.15	640.0	**BG40G10-../DHE06LA4**	43	7000	-
0.12	2.0	445	1.05	710.9	**BG40G10-../DHE06LA4**	43	7000	-
0.12	1.8	495	0.94	789.1	**BG40G10-../DHE06LA4**	43	7000	-
0.12	1.5	465*	1.0	965.2	**BG40G10-../DHE06LA4**	43	7000	-
0.12	1.2	465*	1.0	1225	**BG40G10-../DHE06LA4**	43	7000	-
0.12	0.95	465*	1.0	1459	**BG40G10-../DHE06LA4**	43	7000	-
0.12	0.8	465*	1.0	1738	**BG40G10-../DHE06LA4**	43	7000	-
0.12	0.7	465*	1.0	2087	**BG40G10-../DHE06LA4**	43	7000	-
0.12	0.55	465*	1.0	2628	**BG40G10-../DHE06LA4**	43	7000	-
0.12	0.45	465*	1.0	3082	**BG40G10-../DHE06LA4**	43	7000	-
0.12	0.37	465*	1.0	3805	**BG40G10-../DHE06LA4**	43	7000	-
0.12	0.33	465*	1.0	4216	**BG40G10-../DHE06LA4**	43	7000	-
0.12	0.29	465*	1.0	4841	**BG40G10-../DHE06LA4**	43	7000	-
0.12	5.4	210	3.0	258.6	**BG50Z-../DHE06LA4**	47	10000	-
0.12	4.9	230	2.7	286.7	**BG50Z-../DHE06LA4**	47	10000	-
0.12	3.2	250	2.8	446.5	**BG50G10-../DHE06LA4**	51	10000	-
0.12	2.7	305	2.3	531.5	**BG50G10-../DHE06LA4**	51	10000	-
0.12	2.3	385	1.8	621.3	**BG50G10-../DHE06LA4**	51	10000	-
0.12	2.0	445	1.55	708.3	**BG50G10-../DHE06LA4**	51	10000	-
0.12	1.8	495	1.4	785.1	**BG50G10-../DHE06LA4**	51	10000	-
0.12	1.5	610	1.15	960.2	**BG50G10-../DHE06LA4**	51	10000	-
0.12	1.2	790	0.87	1219	**BG50G10-../DHE06LA4**	51	10000	-
0.12	1.0	690*	1.0	1452	**BG50G10-../DHE06LA4**	51	10000	-
0.12	0.85	690*	1.0	1729	**BG50G10-../DHE06LA4**	51	10000	-
0.12	0.7	690*	1.0	2076	**BG50G10-../DHE06LA4**	51	10000	-
0.12	0.55	690*	1.0	2615	**BG50G10-../DHE06LA4**	51	10000	-
0.12	0.46	690*	1.0	3066	**BG50G10-../DHE06LA4**	51	10000	-
0.12	0.37	690*	1.0	3786	**BG50G10-../DHE06LA4**	51	10000	-
0.12	0.34	690*	1.0	4195	**BG50G10-../DHE06LA4**	51	10000	-
0.12	0.29	690*	1.0	4816	**BG50G10-../DHE06LA4**	51	10000	-
0.12	1.8	430	3.0	804.5	**BG60G20-../DHE06LA4**	100	16000	-
0.12	1.6	490	2.7	891.5	**BG60G20-../DHE06LA4**	100	16000	-

The torques marked (*) are maximum permissible torques for service factor f_B=1,0.

0.12 kW

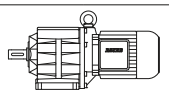

P_N	50 Hz			i	Type	m	F_{RN}	F_{RV}
	n_2	M_2	f_B					
[kW]	[1/min]	[Nm]	[—]	[:1]		[kg]	[N]	[N]
0.12	1.4	570	2.3	1051	**BG60G20-../DHE06LA4**	100	16000	-
0.12	1.2	700	1.85	1168	**BG60G20-../DHE06LA4**	100	16000	-
0.12	1.1	770	1.7	1346	**BG60G20-../DHE06LA4**	100	16000	-
0.12	0.95	930	1.4	1496	**BG60G20-../DHE06LA4**	100	16000	-
0.12	0.8	1160	1.1	1741	**BG60G20-../DHE06LA4**	100	16000	-
0.12	0.75	1250	1.05	1880	**BG60G20-../DHE06LA4**	100	16000	-
0.12	0.65	1300*	1.0	2249	**BG60G20-../DHE06LA4**	100	16000	-
0.12	0.5	1300*	1.0	2818	**BG60G20-../DHE06LA4**	100	16000	-
0.12	0.43	1300*	1.0	3234	**BG60G20-../DHE06LA4**	100	16000	-
0.12	0.39	1300*	1.0	3592	**BG60G20-../DHE06LA4**	100	16000	-
0.12	0.32	1300*	1.0	4429	**BG60G20-../DHE06LA4**	100	16000	-
0.12	1.0	900	2.8	1389	**BG70G20-../DHE06LA4**	130	20000	-
0.12	0.9	1030	2.4	1543	**BG70G20-../DHE06LA4**	130	20000	-
0.12	0.85	1100	2.3	1666	**BG70G20-../DHE06LA4**	130	20000	-
0.12	0.7	1390	1.8	1994	**BG70G20-../DHE06LA4**	130	20000	-
0.12	0.65	1520	1.65	2215	**BG70G20-../DHE06LA4**	130	20000	-
0.12	0.5	2050	1.2	2774	**BG70G20-../DHE06LA4**	130	20000	-
0.12	0.44	2350	1.05	3184	**BG70G20-../DHE06LA4**	130	20000	-
0.12	0.36	2500*	1.0	3925	**BG70G20-../DHE06LA4**	130	20000	-

0.18 kW

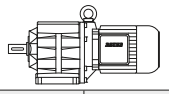

P_N	50 Hz			i	Type	m	F_{RN}	F_{RV}
	n_2	M_2	f_B					
[kW]	[1/min]	[Nm]	[—]	[:1]		[kg]	[N]	[N]
0.18	530	3.2	2.8	2.64	**BG05-../DHE05LA4**	7.0	420	-
0.18	410	4.15	2.4	3.38	**BG05-../DHE05LA4**	7.0	460	-
0.18	300	5.7	2.1	4.59	**BG05-../DHE05LA4**	7.0	490	-
0.18	255	6.7	2.1	5.46	**BG05-../DHE05LA4**	7.0	490	-
0.18	230	7.4	2.3	6.09	**BG05-../DHE05LA4**	7.0	480	-
0.18	210	8.1	2.1	6.64	**BG05-../DHE05LA4**	7.0	500	-
0.18	177	9.7	1.85	7.80	**BG05-../DHE05LA4**	7.0	530	-
0.18	169	10.1	1.8	8.15	**BG05-../DHE05LA4**	7.0	510	-
0.18	162	10.6	1.8	8.51	**BG05-../DHE05LA4**	7.0	550	-
0.18	133	12.9	1.45	10.40	**BG05-../DHE05LA4**	7.0	510	-
0.18	130	13.2	1.5	10.59	**BG05-../DHE05LA4**	7.0	590	-
0.18	120	14.3	1.45	11.55	**BG05-../DHE05LA4**	7.0	600	-
0.18	115	14.9	1.4	12.05	**BG05-../DHE05LA4**	7.0	510	-
0.18	110	15.6	1.4	12.60	**BG05-../DHE05LA4**	7.0	610	-
0.18	100	17.1	1.35	13.75	**BG05-../DHE05LA4**	7.0	630	-
0.18	91	18.8	1.3	15.23	**BG05-../DHE05LA4**	7.0	640	-
0.18	83	20.5	1.2	16.62	**BG05-../DHE05LA4**	7.0	660	-
0.18	74	23	1.15	18.82	**BG05-../DHE05LA4**	7.0	680	-
0.18	67	25.5	1.05	20.53	**BG05-../DHE05LA4**	7.0	700	-
0.18	58	29.5	0.95	24.00	**BG05-../DHE05LA4**	7.0	740	-
0.18	53	32	0.91	26.18	**BG05-../DHE05LA4**	7.0	760	-
0.18	49.5	34.5	0.87	27.82	**BG05-../DHE05LA4**	7.0	770	-
0.18	45.5	37.5	0.8	30.35	**BG05-../DHE05LA4**	7.0	760	-
0.18	235	7.3	3.3	5.96	**BG06-../DHE05LA4**	8.0	570	-
0.18	197	8.7	3.0	7.01	**BG06-../DHE05LA4**	8.0	580	-
0.18	164	10.4	2.7	8.39	**BG06-../DHE05LA4**	8.0	600	-
0.18	147	11.6	2.6	9.38	**BG06-../DHE05LA4**	8.0	640	-
0.18	135	12.7	2.4	10.24	**BG06-../DHE05LA4**	8.0	640	-
0.18	122	14	2.3	11.28	**BG06-../DHE05LA4**	8.0	670	-
0.18	112	15.3	2.2	12.30	**BG06-../DHE05LA4**	8.0	670	-
0.18	106	16.2	2.0	12.98	**BG06-../DHE05LA4**	8.0	600	-
0.18	94	18.2	1.85	14.78	**BG06-../DHE05LA4**	8.0	730	-
0.18	86	19.9	1.75	16.13	**BG06-../DHE05LA4**	8.0	740	-
0.18	80	21	1.8	17.40	**BG06-../DHE05LA4**	8.0	760	-
0.18	73	23.5	1.7	18.98	**BG06-../DHE05LA4**	8.0	770	-
0.18	67	25.5	1.55	20.82	**BG06-../DHE05LA4**	8.0	800	-
0.18	61	28	1.55	22.71	**BG06-../DHE05LA4**	8.0	810	-
0.18	54	31.5	1.45	25.48	**BG06-../DHE05LA4**	8.0	850	-
0.18	49.5	34.5	1.3	27.80	**BG06-../DHE05LA4**	8.0	840	-
0.18	43	39.5	1.15	32.22	**BG06-../DHE05LA4**	8.0	890	-

The torques marked (*) are maximum permissible torques for service factor f_B=1,0.

0.18 kW

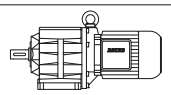

P_N	50 Hz			i	Type	m	F_{RN}	F_{RV}
	n_2	M_2	f_B					
[kW]	[1/min]	[Nm]	[—]	[:1]		[kg]	[N]	[N]
0.18	39.5	43.5	1.05	35.15	**BG06-../DHE05LA4**	8.0	880	-
0.18	37.5	45.5	0.99	36.91	**BG06-../DHE05LA4**	8.0	890	-
0.18	34.5	49.5	0.91	40.26	**BG06-../DHE05LA4**	8.0	890	-
0.18	47.5	36	3.3	29.09	**BG10-../DHE06LA4**	13	1540	2150
0.18	43.5	39.5	3.0	31.52	**BG10-../DHE06LA4**	13	1600	2200
0.18	39.5	43.5	2.8	34.92	**BG10-../DHE06LA4**	13	1690	2350
0.18	35	49	2.4	39.70	**BG10-../DHE06LA4**	13	1780	2450
0.18	31.5	54	2.2	43.99	**BG10-../DHE06LA4**	13	1880	2600
0.18	29.5	58	2.1	46.55	**BG10-../DHE06LA4**	13	1920	2650
0.18	27	63	1.9	51.57	**BG10-../DHE06LA4**	13	2000	2800
0.18	24	71	1.7	57.48	**BG10-../DHE06LA4**	13	2000	2800
0.18	22	78	1.55	63.69	**BG10-../DHE06LA4**	13	2000	2800
0.18	21	81	1.5	66.00	**BG10-../DHE06LA4**	13	2000	2800
0.18	19	90	1.35	73.13	**BG10-../DHE06LA4**	13	2000	2800
0.18	18	95	1.25	77.40	**BG10Z-../DHE06LA4**	14	2000	2800
0.18	16	107	1.1	85.76	**BG10Z-../DHE06LA4**	14	2000	2800
0.18	15	114	1.05	92.19	**BG10Z-../DHE06LA4**	14	2000	2800
0.18	13.5	127	0.94	102.1	**BG10Z-../DHE06LA4**	14	2000	2800
0.18	12.5	137	0.88	109.8	**BG10Z-../DHE06LA4**	14	2000	2800
0.18	11.5	149	0.81	121.7	**BG10Z-../DHE06LA4**	14	2000	2800
0.18	36.5	47	3.2	37.90	**BG15-../DHE06LA4**	13	3000	6000
0.18	26	66	3.0	53.22	**BG20-../DHE06LA4**	16	4950	-
0.18	23.5	73	2.7	59.07	**BG20-../DHE06LA4**	16	5000	-
0.18	21	81	2.5	65.62	**BG20-../DHE06LA4**	16	5000	-
0.18	20.5	83	2.4	67.53	**BG20Z-../DHE06LA4**	16	5000	-
0.18	18.5	92	2.2	75.00	**BG20Z-../DHE06LA4**	16	5000	-
0.18	17.5	98	2.0	78.60	**BG20Z-../DHE06LA4**	16	5000	-
0.18	16	107	1.85	87.30	**BG20Z-../DHE06LA4**	16	5000	-
0.18	15	114	1.75	94.27	**BG20Z-../DHE06LA4**	16	5000	-
0.18	13.5	127	1.55	104.7	**BG20Z-../DHE06LA4**	16	5000	-
0.18	12.5	137	1.45	112.8	**BG20Z-../DHE06LA4**	16	5000	-
0.18	11	156	1.3	125.3	**BG20Z-../DHE06LA4**	16	5000	-
0.18	9.7	177	1.15	141.3	**BG20Z-../DHE06LA4**	16	5000	-
0.18	8.5	200	1.0	162.2	**BG20Z-../DHE06LA4**	16	5000	-
0.18	7.7	220	0.91	180.1	**BG20Z-../DHE06LA4**	16	5000	-
0.18	6.9	245	0.82	199.9	**BG20Z-../DHE06LA4**	16	5000	-
0.18	21	81	3.3	65.79	**BG30Z-../DHE06LA4**	22	6000	-
0.18	19	90	3.3	73.51	**BG30Z-../DHE06LA4**	22	6000	-
0.18	17	101	3.0	81.55	**BG30Z-../DHE06LA4**	22	6000	-
0.18	16	107	2.8	86.13	**BG30Z-../DHE06LA4**	22	6000	-
0.18	14.5	118	2.5	95.55	**BG30Z-../DHE06LA4**	22	6000	-
0.18	12.5	137	2.2	109.6	**BG30Z-../DHE06LA4**	22	6000	-
0.18	11.5	149	2.0	121.6	**BG30Z-../DHE06LA4**	22	6000	-
0.18	11	156	1.9	128.5	**BG30Z-../DHE06LA4**	22	6000	-
0.18	9.7	177	1.7	142.5	**BG30Z-../DHE06LA4**	22	6000	-
0.18	9.1	188	1.6	151.5	**BG30Z-../DHE06LA4**	22	6000	-
0.18	8.2	205	1.45	168.1	**BG30Z-../DHE06LA4**	22	6000	-
0.18	7.5	225	1.35	182.9	**BG30Z-../DHE06LA4**	22	6000	-
0.18	6.8	250	1.2	202.9	**BG30Z-../DHE06LA4**	22	6000	-
0.18	6.1	280	1.05	225.9	**BG30Z-../DHE06LA4**	22	6000	-
0.18	5.3	320	0.94	261.9	**BG30Z-../DHE06LA4**	22	6000	-
0.18	4.8	355	0.85	290.5	**BG30Z-../DHE06LA4**	22	6000	-
0.18	4.5	350	0.93	306.2	**BG30G06-../DHE06LA4**	25	6000	-
0.18	4.0	400	0.81	346.8	**BG30G06-../DHE06LA4**	25	6000	-
0.18	13	132	3.2	107.5	**BG40Z-../DHE06LA4**	38	7000	-
0.18	11.5	149	2.9	121.3	**BG40Z-../DHE06LA4**	38	7000	-
0.18	10.5	163	2.6	134.6	**BG40Z-../DHE06LA4**	38	7000	-
0.18	9.7	177	2.4	141.4	**BG40Z-../DHE06LA4**	38	7000	-
0.18	8.8	195	2.2	156.9	**BG40Z-../DHE06LA4**	38	7000	-
0.18	8.3	205	2.1	166.1	**BG40Z-../DHE06LA4**	38	7000	-
0.18	7.5	225	1.9	184.4	**BG40Z-../DHE06LA4**	38	7000	-
0.18	6.9	245	1.75	199.9	**BG40Z-../DHE06LA4**	38	7000	-
0.18	6.2	275	1.55	221.9	**BG40Z-../DHE06LA4**	38	7000	-
0.18	5.6	305	1.4	246.5	**BG40Z-../DHE06LA4**	38	7000	-
0.18	5.1	335	1.25	273.6	**BG40Z-../DHE06LA4**	38	7000	-

The torques marked (*) are maximum permissible torques for service factor f_B=1,0.

0.18 kW

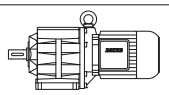

P_N	50 Hz			i	Type	m	F_{RN}	F_{RV}
	n_2	M_2	f_B					
[kW]	[1/min]	[Nm]	[—]	[:1]		[kg]	[N]	[N]
0.18	4.8	265	1.75	288.6	**BG40G10-../DHE06LA4**	43	7000	-
0.18	3.9	340	1.35	353.5	**BG40G10-../DHE06LA4**	43	7000	-
0.18	3.1	445	1.05	448.8	**BG40G10-../DHE06LA4**	43	7000	-
0.18	2.6	540	0.86	534.2	**BG40G10-../DHE06LA4**	43	7000	-
0.18	8.4	200	3.2	164.9	**BG50Z-../DHE06LA4**	47	10000	-
0.18	7.5	225	2.8	182.8	**BG50Z-../DHE06LA4**	47	10000	-
0.18	6.7	255	2.5	204.7	**BG50Z-../DHE06LA4**	47	10000	-
0.18	6.1	280	2.3	226.9	**BG50Z-../DHE06LA4**	47	10000	-
0.18	5.3	320	1.95	258.6	**BG50Z-../DHE06LA4**	47	10000	-
0.18	4.8	355	1.75	286.7	**BG50Z-../DHE06LA4**	47	10000	-
0.18	3.9	340	2.0	351.7	**BG50G10-../DHE06LA4**	51	10000	-
0.18	3.1	445	1.55	446.5	**BG50G10-../DHE06LA4**	51	10000	-
0.18	2.6	540	1.3	531.5	**BG50G10-../DHE06LA4**	51	10000	-
0.18	2.3	630	1.1	621.3	**BG50G10-../DHE06LA4**	51	10000	-
0.18	2.0	730	0.95	708.3	**BG50G10-../DHE06LA4**	51	10000	-
0.18	1.8	810	0.85	785.1	**BG50G10-../DHE06LA4**	51	10000	-
0.18	2.8	465	2.8	504.9	**BG60G20-../DHE06LA4**	100	16000	-
0.18	2.5	520	2.5	559.5	**BG60G20-../DHE06LA4**	100	16000	-
0.18	2.2	610	2.1	651.3	**BG60G20-../DHE06LA4**	100	16000	-
0.18	1.8	750	1.75	804.5	**BG60G20-../DHE06LA4**	100	16000	-
0.18	1.6	840	1.55	891.5	**BG60G20-../DHE06LA4**	100	16000	-
0.18	1.4	980	1.35	1051	**BG60G20-../DHE06LA4**	100	16000	-
0.18	1.2	1180	1.1	1168	**BG60G20-../DHE06LA4**	100	16000	-
0.18	1.1	1290	1.0	1346	**BG60G20-../DHE06LA4**	100	16000	-
0.18	1.8	750	3.3	790.2	**BG70G20-../DHE06LA4**	130	20000	-
0.18	1.6	860	2.9	877.6	**BG70G20-../DHE06LA4**	130	20000	-
0.18	1.4	1000	2.5	1035	**BG70G20-../DHE06LA4**	130	20000	-
0.18	1.2	1190	2.1	1193	**BG70G20-../DHE06LA4**	130	20000	-
0.18	1.0	1470	1.7	1389	**BG70G20-../DHE06LA4**	130	20000	-
0.18	0.9	1670	1.5	1543	**BG70G20-../DHE06LA4**	130	20000	-
0.18	0.85	1780	1.4	1666	**BG70G20-../DHE06LA4**	130	20000	-
0.18	0.7	2200	1.15	1994	**BG70G20-../DHE06LA4**	130	20000	-
0.18	0.65	2400	1.05	2215	**BG70G20-../DHE06LA4**	130	20000	-

0.25 kW

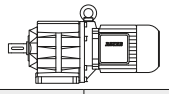

P_N	50 Hz			i	Type	m	F_{RN}	F_{RV}
	n_2	M_2	f_B					
[kW]	[1/min]	[Nm]	[—]	[:1]		[kg]	[N]	[N]
0.25	530	4.5	2.0	2.64	**BG05-../DHE07LA4**	11	420	-
0.25	410	5.8	1.7	3.38	**BG05-../DHE07LA4**	11	460	-
0.25	300	7.9	1.5	4.59	**BG05-../DHE07LA4**	11	490	-
0.25	255	9.3	1.5	5.46	**BG05-../DHE07LA4**	11	490	-
0.25	230	10.3	1.65	6.09	**BG05-../DHE07LA4**	11	480	-
0.25	210	11.3	1.5	6.64	**BG05-../DHE07LA4**	11	500	-
0.25	177	13.4	1.35	7.80	**BG05-../DHE07LA4**	11	530	-
0.25	169	14.1	1.3	8.15	**BG05-../DHE07LA4**	11	510	-
0.25	162	14.7	1.3	8.51	**BG05-../DHE07LA4**	11	550	-
0.25	133	17.9	1.05	10.40	**BG05-../DHE07LA4**	11	510	-
0.25	130	18.3	1.1	10.59	**BG05-../DHE07LA4**	11	590	-
0.25	120	19.8	1.05	11.55	**BG05-../DHE07LA4**	11	600	-
0.25	115	20.5	1.0	12.05	**BG05-../DHE07LA4**	11	510	-
0.25	110	21.5	1.0	12.60	**BG05-../DHE07LA4**	11	610	-
0.25	100	23.5	0.98	13.75	**BG05-../DHE07LA4**	11	630	-
0.25	91	26	0.92	15.23	**BG05-../DHE07LA4**	11	640	-
0.25	83	28.5	0.88	16.62	**BG05-../DHE07LA4**	11	660	-
0.25	74	32	0.81	18.82	**BG05-../DHE07LA4**	11	680	-
0.25	365	6.5	3.1	3.78	**BG06-../DHE07LA4**	12	520	-
0.25	305	7.8	2.8	4.54	**BG06-../DHE07LA4**	12	530	-
0.25	235	10.1	2.4	5.96	**BG06-../DHE07LA4**	12	570	-
0.25	197	12.1	2.1	7.01	**BG06-../DHE07LA4**	12	580	-
0.25	164	14.5	1.95	8.39	**BG06-../DHE07LA4**	12	600	-
0.25	147	16.2	1.85	9.38	**BG06-../DHE07LA4**	12	640	-

The torques marked (*) are maximum permissible torques for service factor f_B=1,0.

0.25 kW

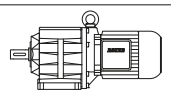

P_N	50 Hz			i	Type	m	F_{RN}	F_{RV}
	n_2	M_2	f_B					
[kW]	[1/min]	[Nm]	[—]	[:1]		[kg]	[N]	[N]
0.25	135	17.6	1.75	10.24	**BG06-../DHE07LA4**	12	640	-
0.25	122	19.5	1.65	11.28	**BG06-../DHE07LA4**	12	670	-
0.25	112	21	1.55	12.30	**BG06-../DHE07LA4**	12	670	-
0.25	106	22.5	1.45	12.98	**BG06-../DHE07LA4**	12	600	-
0.25	94	25	1.35	14.78	**BG06-../DHE07LA4**	12	730	-
0.25	86	27.5	1.25	16.13	**BG06-../DHE07LA4**	12	740	-
0.25	80	29.5	1.3	17.40	**BG06-../DHE07LA4**	12	760	-
0.25	73	32.5	1.25	18.98	**BG06-../DHE07LA4**	12	770	-
0.25	67	35.5	1.15	20.82	**BG06-../DHE07LA4**	12	800	-
0.25	61	39	1.1	22.71	**BG06-../DHE07LA4**	12	810	-
0.25	54	44	1.0	25.48	**BG06-../DHE07LA4**	12	850	-
0.25	49.5	48	0.94	27.80	**BG06-../DHE07LA4**	12	840	-
0.25	43	55	0.82	32.22	**BG06-../DHE07LA4**	12	890	-
0.25	63	37.5	3.2	22.04	**BG10-../DHE07LA4**	15	1330	1860
0.25	57	41.5	2.9	24.42	**BG10-../DHE07LA4**	15	1410	1970
0.25	53	45	2.7	26.26	**BG10-../DHE07LA4**	15	1460	2000
0.25	47.5	50	2.4	29.09	**BG10-../DHE07LA4**	15	1540	2150
0.25	44	54	2.2	31.52	**BG10-../DHE07LA4**	15	1600	2200
0.25	39.5	60	2.0	34.92	**BG10-../DHE07LA4**	15	1690	2350
0.25	35	68	1.75	39.70	**BG10-../DHE07LA4**	15	1780	2450
0.25	31.5	75	1.6	43.99	**BG10-../DHE07LA4**	15	1880	2600
0.25	30	79	1.5	46.55	**BG10-../DHE07LA4**	15	1920	2650
0.25	27	88	1.35	51.57	**BG10-../DHE07LA4**	15	2000	2800
0.25	24	99	1.2	57.48	**BG10-../DHE07LA4**	15	2000	2800
0.25	22	108	1.1	63.69	**BG10-../DHE07LA4**	15	2000	2800
0.25	21	113	1.05	66.00	**BG10-../DHE07LA4**	15	2000	2800
0.25	19	125	0.96	73.13	**BG10-../DHE07LA4**	15	2000	2800
0.25	18	132	0.91	77.40	**BG10Z-../DHE07LA4**	16	2000	2800
0.25	16.5	144	0.83	85.76	**BG10Z-../DHE07LA4**	16	2000	2800
0.25	51	46.5	3.2	27.08	**BG15-../DHE07LA4**	15	3000	6000
0.25	46	51	2.9	30.08	**BG15-../DHE07LA4**	15	3000	6000
0.25	40.5	58	2.6	34.20	**BG15-../DHE07LA4**	15	3000	6000
0.25	36.5	65	2.3	37.90	**BG15-../DHE07LA4**	15	3000	6000
0.25	37.5	63	3.2	37.02	**BG20-../DHE07LA4**	18	4300	-
0.25	33	72	2.8	41.76	**BG20-../DHE07LA4**	18	4500	-
0.25	30	79	2.5	46.38	**BG20-../DHE07LA4**	18	4700	-
0.25	29	82	2.4	47.92	**BG20-../DHE07LA4**	18	4750	-
0.25	26	91	2.2	53.22	**BG20-../DHE07LA4**	18	4950	-
0.25	23.5	101	2.0	59.07	**BG20-../DHE07LA4**	18	5000	-
0.25	21	113	1.75	65.62	**BG20-../DHE07LA4**	18	5000	-
0.25	20.5	116	1.7	67.53	**BG20Z-../DHE07LA4**	19	5000	-
0.25	18.5	129	1.55	75.00	**BG20Z-../DHE07LA4**	19	5000	-
0.25	17.5	136	1.45	78.60	**BG20Z-../DHE07LA4**	19	5000	-
0.25	16	149	1.35	87.30	**BG20Z-../DHE07LA4**	19	5000	-
0.25	15	159	1.25	94.27	**BG20Z-../DHE07LA4**	19	5000	-
0.25	13.5	176	1.15	104.7	**BG20Z-../DHE07LA4**	19	5000	-
0.25	12.5	191	1.05	112.8	**BG20Z-../DHE07LA4**	19	5000	-
0.25	11	215	0.93	125.3	**BG20Z-../DHE07LA4**	19	5000	-
0.25	9.8	240	0.83	141.3	**BG20Z-../DHE07LA4**	19	5000	-
0.25	26.5	90	3.3	52.44	**BG30-../DHE07LA4**	22	6000	-
0.25	24	99	3.0	58.18	**BG30-../DHE07LA4**	22	6000	-
0.25	23	103	2.9	60.79	**BG30-../DHE07LA4**	22	6000	-
0.25	20.5	116	2.6	67.44	**BG30-../DHE07LA4**	22	6000	-
0.25	19	125	2.4	73.51	**BG30Z-../DHE07LA4**	25	6000	-
0.25	17	140	2.1	81.55	**BG30Z-../DHE07LA4**	25	6000	-
0.25	16	149	2.0	86.13	**BG30Z-../DHE07LA4**	25	6000	-
0.25	14.5	164	1.85	95.55	**BG30Z-../DHE07LA4**	25	6000	-
0.25	13	183	1.65	109.6	**BG30Z-../DHE07LA4**	25	6000	-
0.25	11.5	205	1.45	121.6	**BG30Z-../DHE07LA4**	25	6000	-
0.25	11	215	1.4	128.5	**BG30Z-../DHE07LA4**	25	6000	-
0.25	9.7	245	1.2	142.5	**BG30Z-../DHE07LA4**	25	6000	-
0.25	9.1	260	1.15	151.5	**BG30Z-../DHE07LA4**	25	6000	-
0.25	8.2	290	1.05	168.1	**BG30Z-../DHE07LA4**	25	6000	-
0.25	7.6	310	0.97	182.9	**BG30Z-../DHE07LA4**	25	6000	-
0.25	6.8	350	0.86	202.9	**BG30Z-../DHE07LA4**	25	6000	-

The torques marked (*) are maximum permissible torques for service factor f_B=1,0.

0.25 kW

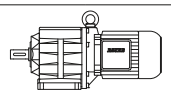

P_N	50 Hz			i	Type	m	F_{RN}	F_{RV}
	n_2	M_2	f_B					
[kW]	[1/min]	[Nm]	[—]	[:1]		[kg]	[N]	[N]
0.25	18.5	129	3.3	75.19	**BG40Z-../DHE07LA4**	40	7000	-
0.25	17	140	3.0	82.00	**BG40Z-../DHE07LA4**	40	7000	-
0.25	15.5	154	2.8	91.02	**BG40Z-../DHE07LA4**	40	7000	-
0.25	14.5	164	2.6	96.86	**BG40Z-../DHE07LA4**	40	7000	-
0.25	13	183	2.3	107.5	**BG40Z-../DHE07LA4**	40	7000	-
0.25	11.5	205	2.1	121.3	**BG40Z-../DHE07LA4**	40	7000	-
0.25	10.5	225	1.9	134.6	**BG40Z-../DHE07LA4**	40	7000	-
0.25	9.8	240	1.75	141.4	**BG40Z-../DHE07LA4**	40	7000	-
0.25	8.8	270	1.55	156.9	**BG40Z-../DHE07LA4**	40	7000	-
0.25	8.3	285	1.5	166.1	**BG40Z-../DHE07LA4**	40	7000	-
0.25	7.5	315	1.35	184.4	**BG40Z-../DHE07LA4**	40	7000	-
0.25	6.9	345	1.25	199.9	**BG40Z-../DHE07LA4**	40	7000	-
0.25	6.2	385	1.1	221.9	**BG40Z-../DHE07LA4**	40	7000	-
0.25	5.6	425	1.0	246.5	**BG40Z-../DHE07LA4**	40	7000	-
0.25	5.1	465	0.91	273.6	**BG40Z-../DHE07LA4**	40	7000	-
0.25	4.8	405	1.15	288.6	**BG40G10-../DHE07LA4**	46	7000	-
0.25	3.9	510	0.91	353.5	**BG40G10-../DHE07LA4**	46	7000	-
0.25	11	215	2.9	128.9	**BG50Z-../DHE07LA4**	50	10000	-
0.25	9.7	245	2.6	142.9	**BG50Z-../DHE07LA4**	50	10000	-
0.25	8.4	280	2.3	164.9	**BG50Z-../DHE07LA4**	50	10000	-
0.25	7.6	310	2.0	182.8	**BG50Z-../DHE07LA4**	50	10000	-
0.25	6.8	350	1.8	204.7	**BG50Z-../DHE07LA4**	50	10000	-
0.25	6.1	390	1.6	226.9	**BG50Z-../DHE07LA4**	50	10000	-
0.25	5.4	440	1.45	258.6	**BG50Z-../DHE07LA4**	50	10000	-
0.25	4.8	495	1.25	286.7	**BG50Z-../DHE07LA4**	50	10000	-
0.25	4.0	495	1.4	351.7	**BG50G10-../DHE07LA4**	54	10000	-
0.25	3.1	660	1.05	446.5	**BG50G10-../DHE07LA4**	54	10000	-
0.25	2.6	800	0.86	531.5	**BG50G10-../DHE07LA4**	54	10000	-
0.25	4.5	400	3.3	306.1	**BG60G20-../DHE07LA4**	102	16000	-
0.25	4.2	425	3.1	334.3	**BG60G20-../DHE07LA4**	102	16000	-
0.25	3.8	470	2.8	370.5	**BG60G20-../DHE07LA4**	102	16000	-
0.25	3.2	580	2.2	437.3	**BG60G20-../DHE07LA4**	102	16000	-
0.25	2.8	700	1.85	504.9	**BG60G20-../DHE07LA4**	102	16000	-
0.25	2.5	790	1.65	559.5	**BG60G20-../DHE07LA4**	102	16000	-
0.25	2.2	920	1.4	651.3	**BG60G20-../DHE07LA4**	102	16000	-
0.25	1.8	1120	1.15	804.5	**BG60G20-../DHE07LA4**	102	16000	-
0.25	1.6	1260	1.05	891.5	**BG60G20-../DHE07LA4**	102	16000	-
0.25	1.4	1460	0.89	1051	**BG60G20-../DHE07LA4**	102	16000	-
0.25	2.4	840	3.0	577.3	**BG70G20-../DHE07LA4**	132	20000	-
0.25	2.1	960	2.6	665.8	**BG70G20-../DHE07LA4**	132	20000	-
0.25	1.8	1120	2.2	790.2	**BG70G20-../DHE07LA4**	132	20000	-
0.25	1.6	1280	1.95	877.6	**BG70G20-../DHE07LA4**	132	20000	-
0.25	1.4	1480	1.7	1035	**BG70G20-../DHE07LA4**	132	20000	-
0.25	1.2	1750	1.45	1193	**BG70G20-../DHE07LA4**	132	20000	-
0.25	1.0	2100	1.2	1389	**BG70G20-../DHE07LA4**	132	20000	-
0.25	0.9	2400	1.05	1543	**BG70G20-../DHE07LA4**	132	20000	-

0.3 kW

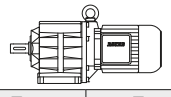

P_N	50 Hz			i	Type	m	F_{RN}	F_{RV}
	n_2	M_2	f_B					
[kW]	[1/min]	[Nm]	[—]	[:1]		[kg]	[N]	[N]
0.3	520	5.5	1.65	2.64	**BG05-../DHE07LA4**	11	420	-
0.3	405	7.0	1.45	3.38	**BG05-../DHE07LA4**	11	460	-
0.3	300	9.5	1.25	4.59	**BG05-../DHE07LA4**	11	490	-
0.3	250	11.4	1.25	5.46	**BG05-../DHE07LA4**	11	490	-
0.3	225	12.7	1.35	6.09	**BG05-../DHE07LA4**	11	480	-
0.3	210	13.6	1.2	6.60	**BG05-../DHE07LA4**	11	510	-
0.3	205	13.9	1.2	6.64	**BG05-../DHE07LA4**	11	500	-
0.3	175	16.3	1.1	7.80	**BG05-../DHE07LA4**	11	530	-
0.3	167	17.1	1.05	8.15	**BG05-../DHE07LA4**	11	510	-
0.3	160	17.9	1.05	8.51	**BG05-../DHE07LA4**	11	550	-
0.3	129	22	0.91	10.59	**BG05-../DHE07LA4**	11	590	-
0.3	118	24	0.88	11.55	**BG05-../DHE07LA4**	11	600	-

The torques marked (*) are maximum permissible torques for service factor f_B=1,0.

0.3 kW

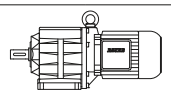

P_N	50 Hz			i	Type	m	F_{RN}	F_{RV}
	n_2	M_2	f_B					
[kW]	[1/min]	[Nm]	[—]	[:1]		[kg]	[N]	[N]
0.3	113	25	0.84	12.05	**BG05-../DHE07LA4**	11	510	-
0.3	108	26.5	0.83	12.60	**BG05-../DHE07LA4**	11	610	-
0.3	99	28.5	0.81	13.75	**BG05-../DHE07LA4**	11	630	-
0.3	360	7.9	2.5	3.78	**BG06-../DHE07LA4**	12	520	-
0.3	300	9.5	2.3	4.54	**BG06-../DHE07LA4**	12	530	-
0.3	230	12.4	1.95	5.96	**BG06-../DHE07LA4**	12	570	-
0.3	195	14.6	1.8	7.01	**BG06-../DHE07LA4**	12	580	-
0.3	163	17.5	1.6	8.39	**BG06-../DHE07LA4**	12	600	-
0.3	145	19.7	1.5	9.38	**BG06-../DHE07LA4**	12	640	-
0.3	133	21.5	1.45	10.24	**BG06-../DHE07LA4**	12	640	-
0.3	121	23.5	1.35	11.28	**BG06-../DHE07LA4**	12	670	-
0.3	111	25.5	1.3	12.30	**BG06-../DHE07LA4**	12	670	-
0.3	105	27	1.2	12.98	**BG06-../DHE07LA4**	12	600	-
0.3	93	30.5	1.1	14.78	**BG06-../DHE07LA4**	12	730	-
0.3	85	33.5	1.05	16.13	**BG06-../DHE07LA4**	12	740	-
0.3	79	36	1.05	17.40	**BG06-../DHE07LA4**	12	760	-
0.3	72	39.5	1.0	18.98	**BG06-../DHE07LA4**	12	770	-
0.3	66	43	0.93	20.82	**BG06-../DHE07LA4**	12	800	-
0.3	60	47.5	0.91	22.71	**BG06-../DHE07LA4**	12	810	-
0.3	54	53	0.85	25.48	**BG06-../DHE07LA4**	12	850	-
0.3	74	38.5	3.1	18.51	**BG10-../DHE07LA4**	15	1210	1690
0.3	67	42.5	2.8	20.51	**BG10-../DHE07LA4**	15	1290	1800
0.3	62	46	2.6	22.04	**BG10-../DHE07LA4**	15	1330	1860
0.3	56	51	2.4	24.42	**BG10-../DHE07LA4**	15	1410	1970
0.3	52	55	2.2	26.26	**BG10-../DHE07LA4**	15	1460	2000
0.3	47	60	2.0	29.09	**BG10-../DHE07LA4**	15	1540	2150
0.3	43.5	65	1.85	31.52	**BG10-../DHE07LA4**	15	1600	2200
0.3	39	73	1.65	34.92	**BG10-../DHE07LA4**	15	1690	2350
0.3	34.5	83	1.45	39.70	**BG10-../DHE07LA4**	15	1780	2450
0.3	31	92	1.3	43.99	**BG10-../DHE07LA4**	15	1880	2600
0.3	29.5	97	1.25	46.55	**BG10-../DHE07LA4**	15	1920	2650
0.3	26.5	108	1.1	51.57	**BG10-../DHE07LA4**	15	2000	2800
0.3	24	119	1.0	57.48	**BG10-../DHE07LA4**	15	2000	2800
0.3	21	136	0.88	66.00	**BG10-../DHE07LA4**	15	2000	2800
0.3	19	150	0.8	73.13	**BG10-../DHE07LA4**	15	2000	2800
0.3	51	56	2.7	27.08	**BG15-../DHE07LA4**	15	3000	6000
0.3	45.5	62	2.4	30.08	**BG15-../DHE07LA4**	15	3000	6000
0.3	40	71	2.1	34.20	**BG15-../DHE07LA4**	15	3000	6000
0.3	36	79	1.9	37.90	**BG15-../DHE07LA4**	15	3000	6000
0.3	44	65	3.1	30.94	**BG20-../DHE07LA4**	18	4000	-
0.3	41	69	2.9	33.33	**BG20-../DHE07LA4**	18	4100	-
0.3	37	77	2.6	37.02	**BG20-../DHE07LA4**	18	4300	-
0.3	33	86	2.3	41.76	**BG20-../DHE07LA4**	18	4500	-
0.3	29.5	97	2.1	46.38	**BG20-../DHE07LA4**	18	4700	-
0.3	28.5	100	2.0	47.92	**BG20-../DHE07LA4**	18	4750	-
0.3	26	110	1.8	53.22	**BG20-../DHE07LA4**	18	4950	-
0.3	23.5	121	1.65	59.07	**BG20-../DHE07LA4**	18	5000	-
0.3	21	136	1.45	65.62	**BG20-../DHE07LA4**	18	5000	-
0.3	20.5	139	1.45	67.53	**BG20Z-../DHE07LA4**	19	5000	-
0.3	18.5	154	1.3	75.00	**BG20Z-../DHE07LA4**	19	5000	-
0.3	17.5	163	1.25	78.60	**BG20Z-../DHE07LA4**	19	5000	-
0.3	16	179	1.1	87.30	**BG20Z-../DHE07LA4**	19	5000	-
0.3	14.5	197	1.0	94.27	**BG20Z-../DHE07LA4**	19	5000	-
0.3	13	220	0.91	104.7	**BG20Z-../DHE07LA4**	19	5000	-
0.3	12.5	225	0.89	112.8	**BG20Z-../DHE07LA4**	19	5000	-
0.3	29	98	3.1	47.11	**BG30-../DHE07LA4**	22	6000	-
0.3	26	110	2.7	52.44	**BG30-../DHE07LA4**	22	6000	-
0.3	23.5	121	2.5	58.18	**BG30-../DHE07LA4**	22	6000	-
0.3	22.5	127	2.4	60.79	**BG30-../DHE07LA4**	22	6000	-
0.3	20.5	139	2.2	67.44	**BG30-../DHE07LA4**	22	6000	-
0.3	19	150	2.0	73.51	**BG30Z-../DHE07LA4**	25	6000	-
0.3	17	168	1.8	81.55	**BG30Z-../DHE07LA4**	25	6000	-
0.3	16	179	1.7	86.13	**BG30Z-../DHE07LA4**	25	6000	-
0.3	14.5	197	1.5	95.55	**BG30Z-../DHE07LA4**	25	6000	-
0.3	12.5	225	1.35	109.6	**BG30Z-../DHE07LA4**	25	6000	-

The torques marked (*) are maximum permissible torques for service factor f_B=1,0.

0.3 kW

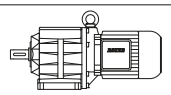

P_N	50 Hz			i	Type	m	F_{RN}	F_{RV}
	n_2	M_2	f_B					
[kW]	[1/min]	[Nm]	[—]	[:1]		[kg]	[N]	[N]
0.3	11.5	245	1.2	121.6	**BG30Z-../DHE07LA4**	25	6000	-
0.3	11	260	1.15	128.5	**BG30Z-../DHE07LA4**	25	6000	-
0.3	9.6	295	1.0	142.5	**BG30Z-../DHE07LA4**	25	6000	-
0.3	9.0	315	0.95	151.5	**BG30Z-../DHE07LA4**	25	6000	-
0.3	8.1	350	0.86	168.1	**BG30Z-../DHE07LA4**	25	6000	-
0.3	20.5	139	3.1	67.74	**BG40Z-../DHE07LA4**	40	7000	-
0.3	18.5	154	2.8	75.19	**BG40Z-../DHE07LA4**	40	7000	-
0.3	17	168	2.5	82.00	**BG40Z-../DHE07LA4**	40	7000	-
0.3	14.5	197	2.2	96.86	**BG40Z-../DHE07LA4**	40	7000	-
0.3	13	220	1.95	107.5	**BG40Z-../DHE07LA4**	40	7000	-
0.3	11.5	245	1.75	121.3	**BG40Z-../DHE07LA4**	40	7000	-
0.3	10.5	270	1.55	134.6	**BG40Z-../DHE07LA4**	40	7000	-
0.3	9.7	295	1.45	141.4	**BG40Z-../DHE07LA4**	40	7000	-
0.3	8.7	325	1.3	156.9	**BG40Z-../DHE07LA4**	40	7000	-
0.3	8.2	345	1.25	166.1	**BG40Z-../DHE07LA4**	40	7000	-
0.3	7.4	385	1.1	184.4	**BG40Z-../DHE07LA4**	40	7000	-
0.3	6.9	415	1.0	199.9	**BG40Z-../DHE07LA4**	40	7000	-
0.3	6.2	460	0.92	221.9	**BG40Z-../DHE07LA4**	40	7000	-
0.3	5.6	510	0.83	246.5	**BG40Z-../DHE07LA4**	40	7000	-
0.3	4.8	500	0.93	288.6	**BG40G10-../DHE07LA4**	46	7000	-
0.3	14.5	197	3.2	95.58	**BG50Z-../DHE07LA4**	50	10000	-
0.3	13	220	2.9	106.0	**BG50Z-../DHE07LA4**	50	10000	-
0.3	11	260	2.4	128.9	**BG50Z-../DHE07LA4**	50	10000	-
0.3	9.6	295	2.1	142.9	**BG50Z-../DHE07LA4**	50	10000	-
0.3	8.3	345	1.85	164.9	**BG50Z-../DHE07LA4**	50	10000	-
0.3	7.5	380	1.65	182.8	**BG50Z-../DHE07LA4**	50	10000	-
0.3	6.7	425	1.5	204.7	**BG50Z-../DHE07LA4**	50	10000	-
0.3	6.0	475	1.35	226.9	**BG50Z-../DHE07LA4**	50	10000	-
0.3	5.3	540	1.15	258.6	**BG50Z-../DHE07LA4**	50	10000	-
0.3	4.8	590	1.05	286.7	**BG50Z-../DHE07LA4**	50	10000	-
0.3	3.9	630	1.1	351.7	**BG50G10-../DHE07LA4**	54	10000	-
0.3	3.1	810	0.85	446.5	**BG50G10-../DHE07LA4**	54	10000	-
0.3	5.0	455	2.9	276.2	**BG60G20-../DHE07LA4**	102	16000	-
0.3	4.5	500	2.6	306.1	**BG60G20-../DHE07LA4**	102	16000	-
0.3	4.1	550	2.4	334.3	**BG60G20-../DHE07LA4**	102	16000	-
0.3	3.7	610	2.1	370.5	**BG60G20-../DHE07LA4**	102	16000	-
0.3	3.2	730	1.8	437.3	**BG60G20-../DHE07LA4**	102	16000	-
0.3	2.7	910	1.45	504.9	**BG60G20-../DHE07LA4**	102	16000	-
0.3	2.5	980	1.35	559.5	**BG60G20-../DHE07LA4**	102	16000	-
0.3	2.1	1190	1.1	651.3	**BG60G20-../DHE07LA4**	102	16000	-
0.3	1.7	1480	0.88	804.5	**BG60G20-../DHE07LA4**	102	16000	-
0.3	1.6	1560	0.83	891.5	**BG60G20-../DHE07LA4**	102	16000	-
0.3	2.8	870	2.9	495.9	**BG70G20-../DHE07LA4**	132	20000	-
0.3	2.4	1040	2.4	577.3	**BG70G20-../DHE07LA4**	132	20000	-
0.3	2.1	1190	2.1	665.8	**BG70G20-../DHE07LA4**	132	20000	-
0.3	1.8	1390	1.8	790.2	**BG70G20-../DHE07LA4**	132	20000	-
0.3	1.6	1580	1.6	877.6	**BG70G20-../DHE07LA4**	132	20000	-
0.3	1.4	1820	1.35	1035	**BG70G20-../DHE07LA4**	132	20000	-
0.3	1.2	2150	1.15	1193	**BG70G20-../DHE07LA4**	132	20000	-
0.3	1.0	2600	0.96	1389	**BG70G20-../DHE07LA4**	132	20000	-

0.37 kW

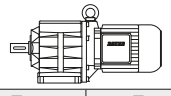

P_N	50 Hz			i	Type	m	F_{RN}	F_{RV}
	n_2	M_2	f_B					
[kW]	[1/min]	[Nm]	[—]	[:1]		[kg]	[N]	[N]
0.37	510	6.9	2.6	2.82	**BG06-../DHE08MA4**	16	470	-
0.37	380	9.2	2.2	3.78	**BG06-../DHE08MA4**	16	520	-
0.37	315	11.2	1.95	4.54	**BG06-../DHE08MA4**	16	530	-
0.37	240	14.7	1.65	5.96	**BG06-../DHE08MA4**	16	570	-
0.37	205	17.2	1.5	7.01	**BG06-../DHE08MA4**	16	580	-
0.37	187	18.8	1.5	7.65	**BG06-../DHE08MA4**	16	580	-
0.37	171	20.5	1.35	8.39	**BG06-../DHE08MA4**	16	600	-

The torques marked (*) are maximum permissible torques for service factor f_B=1,0.

0.37 kW

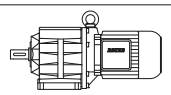

P_N	50 Hz			i	Type	m	F_{RN}	F_{RV}
	n_2	M_2	f_B					
[kW]	[1/min]	[Nm]	[—]	[:1]		[kg]	[N]	[N]
0.37	153	23	1.3	9.38	**BG06-../DHE08MA4**	16	640	-
0.37	140	25	1.25	10.24	**BG06-../DHE08MA4**	16	640	-
0.37	127	27.5	1.15	11.28	**BG06-../DHE08MA4**	16	670	-
0.37	117	30	1.1	12.30	**BG06-../DHE08MA4**	16	670	-
0.37	111	31.5	1.05	12.98	**BG06-../DHE08MA4**	16	600	-
0.37	97	36	0.94	14.78	**BG06-../DHE08MA4**	16	730	-
0.37	89	39.5	0.89	16.13	**BG06-../DHE08MA4**	16	740	-
0.37	83	42.5	0.89	17.40	**BG06-../DHE08MA4**	16	760	-
0.37	76	46	0.87	18.98	**BG06-../DHE08MA4**	16	770	-
0.37	99	35.5	3.2	14.58	**BG10-../DHE08MA4**	16	1100	1540
0.37	89	39.5	3.0	16.15	**BG10-../DHE08MA4**	16	1140	1590
0.37	78	45	2.7	18.51	**BG10-../DHE08MA4**	16	1210	1690
0.37	70	50	2.4	20.51	**BG10-../DHE08MA4**	16	1290	1800
0.37	65	54	2.2	22.04	**BG10-../DHE08MA4**	16	1330	1860
0.37	59	59	2.0	24.42	**BG10-../DHE08MA4**	16	1410	1970
0.37	55	64	1.9	26.26	**BG10-../DHE08MA4**	16	1460	2000
0.37	49.5	71	1.7	29.09	**BG10-../DHE08MA4**	16	1540	2150
0.37	45.5	77	1.55	31.52	**BG10-../DHE08MA4**	16	1600	2200
0.37	41	86	1.4	34.92	**BG10-../DHE08MA4**	16	1690	2350
0.37	36.5	96	1.25	39.70	**BG10-../DHE08MA4**	16	1780	2450
0.37	33	107	1.1	43.99	**BG10-../DHE08MA4**	16	1880	2600
0.37	31	113	1.05	46.55	**BG10-../DHE08MA4**	16	1920	2650
0.37	28	126	0.95	51.57	**BG10-../DHE08MA4**	16	2000	2800
0.37	25	141	0.85	57.48	**BG10-../DHE08MA4**	16	2000	2800
0.37	53	66	2.3	27.08	**BG15-../DHE08MA4**	16	3000	6000
0.37	48	73	2.1	30.08	**BG15-../DHE08MA4**	16	3000	6000
0.37	42	84	1.8	34.20	**BG15-../DHE08MA4**	16	3000	6000
0.37	38	92	1.65	37.90	**BG15-../DHE08MA4**	16	3000	6000
0.37	56	63	3.2	25.79	**BG20-../DHE08MA4**	19	3700	-
0.37	52	67	3.0	27.85	**BG20-../DHE08MA4**	19	3800	-
0.37	46.5	75	2.7	30.94	**BG20-../DHE08MA4**	19	4000	-
0.37	43	82	2.4	33.33	**BG20-../DHE08MA4**	19	4100	-
0.37	39	90	2.2	37.02	**BG20-../DHE08MA4**	19	4300	-
0.37	34.5	102	1.95	41.76	**BG20-../DHE08MA4**	19	4500	-
0.37	31	113	1.75	46.38	**BG20-../DHE08MA4**	19	4700	-
0.37	30	117	1.7	47.92	**BG20-../DHE08MA4**	19	4750	-
0.37	27	130	1.55	53.22	**BG20-../DHE08MA4**	19	4950	-
0.37	24.5	144	1.4	59.07	**BG20-../DHE08MA4**	19	5000	-
0.37	22	160	1.25	65.62	**BG20-../DHE08MA4**	19	5000	-
0.37	21.5	164	1.2	67.53	**BG20Z-../DHE08MA4**	20	5000	-
0.37	19.5	181	1.1	75.00	**BG20Z-../DHE08MA4**	20	5000	-
0.37	18.5	191	1.05	78.60	**BG20Z-../DHE08MA4**	20	5000	-
0.37	16.5	210	0.95	87.30	**BG20Z-../DHE08MA4**	20	5000	-
0.37	15.5	225	0.89	94.27	**BG20Z-../DHE08MA4**	20	5000	-
0.37	14	250	0.8	104.7	**BG20Z-../DHE08MA4**	20	5000	-
0.37	37	95	3.2	39.02	**BG30-../DHE08MA4**	23	5800	-
0.37	34	103	2.9	42.46	**BG30-../DHE08MA4**	23	5900	-
0.37	30.5	115	2.6	47.11	**BG30-../DHE08MA4**	23	6000	-
0.37	27.5	128	2.3	52.44	**BG30-../DHE08MA4**	23	6000	-
0.37	25	141	2.1	58.18	**BG30-../DHE08MA4**	23	6000	-
0.37	24	147	2.0	60.79	**BG30-../DHE08MA4**	23	6000	-
0.37	21.5	164	1.85	67.44	**BG30-../DHE08MA4**	23	6000	-
0.37	19.5	181	1.65	73.51	**BG30Z-../DHE08MA4**	26	6000	-
0.37	18	196	1.55	81.55	**BG30Z-../DHE08MA4**	26	6000	-
0.37	17	205	1.45	86.13	**BG30Z-../DHE08MA4**	26	6000	-
0.37	15	235	1.3	95.55	**BG30Z-../DHE08MA4**	26	6000	-
0.37	13.5	260	1.15	109.6	**BG30Z-../DHE08MA4**	26	6000	-
0.37	12	290	1.05	121.6	**BG30Z-../DHE08MA4**	26	6000	-
0.37	11.5	305	0.98	128.5	**BG30Z-../DHE08MA4**	26	6000	-
0.37	10.5	335	0.9	142.5	**BG30Z-../DHE08MA4**	26	6000	-
0.37	9.5	370	0.81	151.5	**BG30Z-../DHE08MA4**	26	6000	-
0.37	27	130	3.3	53.69	**BG40-../DHE08MA4**	38	7000	-
0.37	24	147	2.9	59.64	**BG40-../DHE08MA4**	38	7000	-
0.37	22	160	2.7	66.20	**BG40-../DHE08MA4**	38	7000	-
0.37	21.5	164	2.6	67.74	**BG40Z-../DHE08MA4**	42	7000	-

The torques marked (*) are maximum permissible torques for service factor f_B=1,0.

0.37 kW

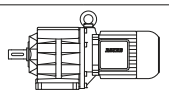

P_N	50 Hz			i	Type	m	F_{RN}	F_{RV}
	n_2	M_2	f_B					
[kW]	[1/min]	[Nm]	[—]	[:1]		[kg]	[N]	[N]
0.37	19.5	181	2.3	75.19	**BG40Z-../DHE08MA4**	42	7000	-
0.37	17.5	200	2.1	82.00	**BG40Z-../DHE08MA4**	42	7000	-
0.37	16	220	1.95	91.02	**BG40Z-../DHE08MA4**	42	7000	-
0.37	15	235	1.8	96.86	**BG40Z-../DHE08MA4**	42	7000	-
0.37	13.5	260	1.65	107.5	**BG40Z-../DHE08MA4**	42	7000	-
0.37	12	290	1.45	121.3	**BG40Z-../DHE08MA4**	42	7000	-
0.37	11	320	1.35	134.6	**BG40Z-../DHE08MA4**	42	7000	-
0.37	10.5	335	1.25	141.4	**BG40Z-../DHE08MA4**	42	7000	-
0.37	9.2	380	1.1	156.9	**BG40Z-../DHE08MA4**	42	7000	-
0.37	8.7	405	1.05	166.1	**BG40Z-../DHE08MA4**	42	7000	-
0.37	7.8	450	0.94	184.4	**BG40Z-../DHE08MA4**	42	7000	-
0.37	7.2	490	0.87	199.9	**BG40Z-../DHE08MA4**	42	7000	-
0.37	18	196	3.2	79.78	**BG50Z-../DHE08MA4**	51	10000	-
0.37	15	235	2.7	95.58	**BG50Z-../DHE08MA4**	51	10000	-
0.37	13.5	260	2.4	106.0	**BG50Z-../DHE08MA4**	51	10000	-
0.37	11.5	305	2.1	128.9	**BG50Z-../DHE08MA4**	51	10000	-
0.37	10.5	335	1.9	142.9	**BG50Z-../DHE08MA4**	51	10000	-
0.37	8.7	405	1.55	164.9	**BG50Z-../DHE08MA4**	51	10000	-
0.37	7.9	445	1.4	182.8	**BG50Z-../DHE08MA4**	51	10000	-
0.37	7.0	500	1.25	204.7	**BG50Z-../DHE08MA4**	51	10000	-
0.37	6.4	550	1.15	226.9	**BG50Z-../DHE08MA4**	51	10000	-
0.37	5.6	630	1.0	258.6	**BG50Z-../DHE08MA4**	51	10000	-
0.37	5.0	700	0.9	286.7	**BG50Z-../DHE08MA4**	51	10000	-
0.37	4.1	760	0.91	351.7	**BG50G10-../DHE08MA4**	55	10000	-
0.37	9.1	385	3.1	158.0	**BG60Z-../DHE08MA4**	96	16000	-
0.37	8.2	430	2.8	175.1	**BG60Z-../DHE08MA4**	96	16000	-
0.37	7.0	500	2.4	204.6	**BG60Z-../DHE08MA4**	96	16000	-
0.37	6.4	550	2.2	226.7	**BG60Z-../DHE08MA4**	96	16000	-
0.37	5.8	600	2.0	247.7	**BG60Z-../DHE08MA4**	96	16000	-
0.37	5.3	660	1.8	274.5	**BG60Z-../DHE08MA4**	96	16000	-
0.37	5.2	560	2.3	276.2	**BG60G20-../DHE08MA4**	103	16000	-
0.37	4.7	620	2.1	306.1	**BG60G20-../DHE08MA4**	103	16000	-
0.37	4.3	680	1.9	334.3	**BG60G20-../DHE08MA4**	103	16000	-
0.37	3.9	750	1.75	370.5	**BG60G20-../DHE08MA4**	103	16000	-
0.37	3.3	900	1.45	437.3	**BG60G20-../DHE08MA4**	103	16000	-
0.37	2.9	1060	1.25	504.9	**BG60G20-../DHE08MA4**	103	16000	-
0.37	2.6	1190	1.1	559.5	**BG60G20-../DHE08MA4**	103	16000	-
0.37	2.2	1440	0.9	651.3	**BG60G20-../DHE08MA4**	103	16000	-
0.37	3.7	800	3.1	387.6	**BG70G20-../DHE08MA4**	133	20000	-
0.37	3.5	880	2.8	417.8	**BG70G20-../DHE08MA4**	133	20000	-
0.37	2.9	1070	2.3	495.9	**BG70G20-../DHE08MA4**	133	20000	-
0.37	2.5	1260	2.0	577.3	**BG70G20-../DHE08MA4**	133	20000	-
0.37	2.2	1430	1.75	665.8	**BG70G20-../DHE08MA4**	133	20000	-
0.37	1.9	1650	1.5	790.2	**BG70G20-../DHE08MA4**	133	20000	-
0.37	1.7	1870	1.35	877.6	**BG70G20-../DHE08MA4**	133	20000	-
0.37	1.4	2300	1.1	1035	**BG70G20-../DHE08MA4**	133	20000	-
0.37	1.2	2700	0.93	1193	**BG70G20-../DHE08MA4**	133	20000	-
0.37	1.1	2950	0.85	1389	**BG70G20-../DHE08MA4**	133	20000	-
0.37	1.8	1440	3.2	817.4	**BG80G40-../DHE08MA4**	215	26000	-
0.37	1.6	1670	2.8	907.6	**BG80G40-../DHE08MA4**	215	26000	-
0.37	1.4	1980	2.3	1042	**BG80G40-../DHE08MA4**	215	26000	-
0.37	1.2	2400	1.9	1261	**BG80G40-../DHE08MA4**	215	26000	-
0.37	1.1	2650	1.75	1400	**BG80G40-../DHE08MA4**	215	26000	-
0.37	0.9	3350	1.35	1653	**BG80G40-../DHE08MA4**	215	26000	-
0.37	0.7	4500	1.0	2070	**BG80G40-../DHE08MA4**	215	26000	-
0.37	0.95	3000	3.1	1583	**BG90G50-../DHE08MA4**	324	65000	-
0.37	0.85	3450	2.7	1756	**BG90G50-../DHE08MA4**	324	65000	-
0.37	0.75	4000	2.3	2026	**BG90G50-../DHE08MA4**	324	65000	-
0.37	0.6	5200	1.75	2514	**BG90G50-../DHE08MA4**	324	65000	-
0.37	0.55	5700	1.6	2786	**BG90G50-../DHE08MA4**	324	65000	-
0.37	0.46	7000	1.3	3177	**BG90G50-../DHE08MA4**	324	65000	-
0.37	0.41	7900	1.15	3521	**BG90G50-../DHE08MA4**	324	65000	-
0.37	0.4	6300	2.9	3644	**BG100G50-../DHE08MA4**	512	90000	-
0.37	0.33	8200	2.3	4366	**BG100G50-../DHE08MA4**	512	90000	-

The torques marked (*) are maximum permissible torques for service factor f_B=1,0.

0.37 kW

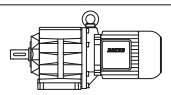

P_N	50 Hz			i	Type	m	F_{RN}	F_{RV}
	n_2	M_2	f_B					
[kW]	[1/min]	[Nm]	[—]	[:1]		[kg]	[N]	[N]
0.37	0.3	9200	2.0	4839	**BG100G50-../DHE08MA4**	512	90000	-
0.37	0.25	11600	1.6	5888	**BG100G50-../DHE08MA4**	512	90000	-
0.37	0.22	13500	1.35	6529	**BG100G50-../DHE08MA4**	512	90000	-
0.37	0.19	16000	1.15	7533	**BG100G50-../DHE08MA4**	512	90000	-
0.37	0.18	17100	1.1	8350	**BG100G50-../DHE08MA4**	512	90000	-

0.55 kW

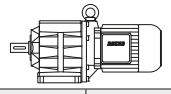

P_N	50 Hz			i	Type	m	F_{RN}	F_{RV}
	n_2	M_2	f_B					
[kW]	[1/min]	[Nm]	[—]	[:1]		[kg]	[N]	[N]
0.55	510	10.2	1.75	2.82	**BG06-../DHE08LA4**	18	470	-
0.55	375	14	1.45	3.78	**BG06-../DHE08LA4**	18	520	-
0.55	315	16.6	1.35	4.54	**BG06-../DHE08LA4**	18	530	-
0.55	240	21.5	1.1	5.96	**BG06-../DHE08LA4**	18	570	-
0.55	205	25.5	1.0	7.01	**BG06-../DHE08LA4**	18	580	-
0.55	185	28	1.0	7.65	**BG06-../DHE08LA4**	18	580	-
0.55	169	31	0.9	8.39	**BG06-../DHE08LA4**	18	600	-
0.55	151	34.5	0.87	9.38	**BG06-../DHE08LA4**	18	640	-
0.55	139	37.5	0.83	10.24	**BG06-../DHE08LA4**	18	640	-
0.55	210	25	3.2	6.78	**BG10-../DHE08LA4**	18	660	920
0.55	186	28	3.2	7.63	**BG10-../DHE08LA4**	18	900	1250
0.55	176	29.5	3.0	8.07	**BG10-../DHE08LA4**	18	660	920
0.55	152	34.5	2.8	9.33	**BG10-../DHE08LA4**	18	950	1330
0.55	137	38	2.6	10.34	**BG10-../DHE08LA4**	18	1000	1400
0.55	119	44	2.4	11.92	**BG10-../DHE08LA4**	18	1030	1440
0.55	108	48.5	2.3	13.21	**BG10-../DHE08LA4**	18	1070	1490
0.55	98	53	2.2	14.58	**BG10-../DHE08LA4**	18	1100	1540
0.55	88	59	2.0	16.15	**BG10-../DHE08LA4**	18	1140	1590
0.55	77	68	1.75	18.51	**BG10-../DHE08LA4**	18	1210	1690
0.55	69	76	1.6	20.51	**BG10-../DHE08LA4**	18	1290	1800
0.55	65	80	1.5	22.04	**BG10-../DHE08LA4**	18	1330	1860
0.55	58	90	1.35	24.42	**BG10-../DHE08LA4**	18	1410	1970
0.55	54	97	1.25	26.26	**BG10-../DHE08LA4**	18	1460	2000
0.55	49	107	1.1	29.09	**BG10-../DHE08LA4**	18	1540	2150
0.55	45	116	1.05	31.52	**BG10-../DHE08LA4**	18	1600	2200
0.55	41	128	0.94	34.92	**BG10-../DHE08LA4**	18	1690	2350
0.55	36	145	0.83	39.70	**BG10-../DHE08LA4**	18	1780	2450
0.55	53	99	1.5	27.08	**BG15-../DHE08LA4**	18	3000	6000
0.55	47.5	110	1.35	30.08	**BG15-../DHE08LA4**	18	3000	6000
0.55	41.5	126	1.2	34.20	**BG15-../DHE08LA4**	18	3000	6000
0.55	37.5	140	1.05	37.90	**BG15-../DHE08LA4**	18	3000	6000
0.55	97	54	3.2	14.67	**BG20-../DHE08LA4**	20	3050	-
0.55	91	57	3.1	15.58	**BG20-../DHE08LA4**	20	3100	-
0.55	82	64	2.9	17.31	**BG20-../DHE08LA4**	20	3200	-
0.55	71	73	2.7	19.95	**BG20-../DHE08LA4**	20	3350	-
0.55	64	82	2.4	22.16	**BG20-../DHE08LA4**	20	3500	-
0.55	61	86	2.3	23.22	**BG20-../DHE08LA4**	20	3550	-
0.55	55	95	2.1	25.79	**BG20-../DHE08LA4**	20	3700	-
0.55	51	102	1.95	27.85	**BG20-../DHE08LA4**	20	3800	-
0.55	46	114	1.75	30.94	**BG20-../DHE08LA4**	20	4000	-
0.55	42.5	123	1.65	33.33	**BG20-../DHE08LA4**	20	4100	-
0.55	38.5	136	1.45	37.02	**BG20-../DHE08LA4**	20	4300	-
0.55	34	154	1.3	41.76	**BG20-../DHE08LA4**	20	4500	-
0.55	31	169	1.2	46.38	**BG20-../DHE08LA4**	20	4700	-
0.55	30	175	1.15	47.92	**BG20-../DHE08LA4**	20	4750	-
0.55	27	194	1.05	53.22	**BG20-../DHE08LA4**	20	4950	-
0.55	24	215	0.93	59.07	**BG20-../DHE08LA4**	20	5000	-
0.55	22	235	0.85	65.62	**BG20-../DHE08LA4**	20	5000	-
0.55	21	250	0.8	67.53	**BG20Z-../DHE08LA4**	22	5000	-
0.55	56	93	3.2	25.45	**BG30-../DHE08LA4**	25	4850	-
0.55	51	102	2.9	28.24	**BG30-../DHE08LA4**	25	5100	-
0.55	47.5	110	2.7	29.83	**BG30-../DHE08LA4**	25	5200	-

The torques marked (*) are maximum permissible torques for service factor f_B=1,0.

0.55 kW

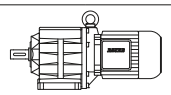

P_N	50 Hz			i	Type	m	F_{RN}	F_{RV}
	n_2	M_2	f_B					
[kW]	[1/min]	[Nm]	[—]	[:1]		[kg]	[N]	[N]
0.55	43	122	2.5	33.09	**BG30-../DHE08LA4**	25	5400	-
0.55	40.5	129	2.3	35.17	**BG30-../DHE08LA4**	25	5500	-
0.55	36.5	143	2.1	39.02	**BG30-../DHE08LA4**	25	5800	-
0.55	33.5	156	1.9	42.46	**BG30-../DHE08LA4**	25	5900	-
0.55	30.5	172	1.75	47.11	**BG30-../DHE08LA4**	25	6000	-
0.55	27	194	1.55	52.44	**BG30-../DHE08LA4**	25	6000	-
0.55	24.5	210	1.45	58.18	**BG30-../DHE08LA4**	25	6000	-
0.55	23.5	220	1.35	60.79	**BG30-../DHE08LA4**	25	6000	-
0.55	21	250	1.2	67.44	**BG30-../DHE08LA4**	25	6000	-
0.55	19.5	265	1.15	73.51	**BG30Z-../DHE08LA4**	28	6000	-
0.55	17.5	300	1.0	81.55	**BG30Z-../DHE08LA4**	28	6000	-
0.55	16.5	315	0.95	86.13	**BG30Z-../DHE08LA4**	28	6000	-
0.55	15	350	0.86	95.55	**BG30Z-../DHE08LA4**	28	6000	-
0.55	37.5	140	3.0	37.96	**BG40-../DHE08LA4**	40	7000	-
0.55	35.5	147	2.9	40.19	**BG40-../DHE08LA4**	40	7000	-
0.55	32	164	2.6	44.62	**BG40-../DHE08LA4**	40	7000	-
0.55	29.5	178	2.4	48.36	**BG40-../DHE08LA4**	40	7000	-
0.55	26.5	198	2.1	53.69	**BG40-../DHE08LA4**	40	7000	-
0.55	24	215	2.0	59.64	**BG40-../DHE08LA4**	40	7000	-
0.55	21.5	240	1.75	66.20	**BG40-../DHE08LA4**	40	7000	-
0.55	21	250	1.7	67.74	**BG40Z-../DHE08LA4**	43	7000	-
0.55	19	275	1.55	75.19	**BG40Z-../DHE08LA4**	43	7000	-
0.55	17.5	300	1.4	82.00	**BG40Z-../DHE08LA4**	43	7000	-
0.55	16	325	1.3	91.02	**BG40Z-../DHE08LA4**	43	7000	-
0.55	15	350	1.2	96.86	**BG40Z-../DHE08LA4**	43	7000	-
0.55	13.5	385	1.1	107.5	**BG40Z-../DHE08LA4**	43	7000	-
0.55	12	435	0.98	121.3	**BG40Z-../DHE08LA4**	43	7000	-
0.55	11	475	0.89	134.6	**BG40Z-../DHE08LA4**	43	7000	-
0.55	10.5	500	0.85	141.4	**BG40Z-../DHE08LA4**	43	7000	-
0.55	27.5	191	3.3	52.12	**BG50-../DHE08LA4**	48	10000	-
0.55	24	215	2.9	59.42	**BG50-../DHE08LA4**	48	10000	-
0.55	21.5	240	2.6	65.86	**BG50-../DHE08LA4**	48	10000	-
0.55	20	260	2.4	71.97	**BG50Z-../DHE08LA4**	52	10000	-
0.55	18	290	2.2	79.78	**BG50Z-../DHE08LA4**	52	10000	-
0.55	15	350	1.8	95.58	**BG50Z-../DHE08LA4**	52	10000	-
0.55	13.5	385	1.65	106.0	**BG50Z-../DHE08LA4**	52	10000	-
0.55	11	475	1.35	128.9	**BG50Z-../DHE08LA4**	52	10000	-
0.55	10	520	1.2	142.9	**BG50Z-../DHE08LA4**	52	10000	-
0.55	8.6	610	1.05	164.9	**BG50Z-../DHE08LA4**	52	10000	-
0.55	7.8	670	0.94	182.8	**BG50Z-../DHE08LA4**	52	10000	-
0.55	7.0	750	0.84	204.7	**BG50Z-../DHE08LA4**	52	10000	-
0.55	14.5	360	3.3	101.0	**BG60Z-../DHE08LA4**	97	16000	-
0.55	12	435	2.8	119.2	**BG60Z-../DHE08LA4**	97	16000	-
0.55	11	475	2.5	132.1	**BG60Z-../DHE08LA4**	97	16000	-
0.55	9.0	580	2.1	158.0	**BG60Z-../DHE08LA4**	97	16000	-
0.55	8.1	640	1.9	175.1	**BG60Z-../DHE08LA4**	97	16000	-
0.55	7.0	750	1.6	204.6	**BG60Z-../DHE08LA4**	97	16000	-
0.55	6.3	830	1.45	226.7	**BG60Z-../DHE08LA4**	97	16000	-
0.55	5.8	900	1.35	247.7	**BG60Z-../DHE08LA4**	97	16000	-
0.55	5.2	1010	1.2	274.5	**BG60Z-../DHE08LA4**	97	16000	-
0.55	4.7	980	1.35	306.1	**BG60G20-../DHE08LA4**	105	16000	-
0.55	4.3	1080	1.2	334.3	**BG60G20-../DHE08LA4**	105	16000	-
0.55	3.9	1190	1.1	370.5	**BG60G20-../DHE08LA4**	105	16000	-
0.55	3.3	1420	0.92	437.3	**BG60G20-../DHE08LA4**	105	16000	-
0.55	7.3	710	3.2	194.4	**BG70Z-../DHE08LA4**	137	20000	-
0.55	6.8	770	3.0	210.5	**BG70Z-../DHE08LA4**	137	20000	-
0.55	5.7	920	2.5	249.8	**BG70Z-../DHE08LA4**	137	20000	-
0.55	5.6	830	3.0	255.5	**BG70G20-../DHE08LA4**	135	20000	-
0.55	5.2	890	2.8	276.7	**BG70G20-../DHE08LA4**	135	20000	-
0.55	4.4	1050	2.4	328.4	**BG70G20-../DHE08LA4**	135	20000	-
0.55	3.7	1270	1.95	387.6	**BG70G20-../DHE08LA4**	135	20000	-
0.55	3.4	1420	1.75	417.8	**BG70G20-../DHE08LA4**	135	20000	-
0.55	2.9	1660	1.5	495.9	**BG70G20-../DHE08LA4**	135	20000	-
0.55	2.5	1950	1.3	577.3	**BG70G20-../DHE08LA4**	135	20000	-
0.55	2.2	2200	1.15	665.8	**BG70G20-../DHE08LA4**	135	20000	-
0.55	1.8	2700	0.93	790.2	**BG70G20-../DHE08LA4**	135	20000	-

The torques marked (*) are maximum permissible torques for service factor f_B=1,0.

0.55 kW

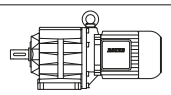

P_N	50 Hz			i	Type	m	F_{RN}	F_{RV}
	n_2	M_2	f_B					
[kW]	[1/min]	[Nm]	[—]	[:1]		[kg]	[N]	[N]
0.55	1.7	2850	0.88	877.6	**BG70G20-../DHE08LA4**	135	20000	-
0.55	2.5	1720	2.7	572.0	**BG80G40-../DHE08LA4**	216	26000	-
0.55	2.2	1900	2.4	657.8	**BG80G40-../DHE08LA4**	216	26000	-
0.55	2.0	2100	2.2	730.3	**BG80G40-../DHE08LA4**	216	26000	-
0.55	1.8	2350	1.95	817.4	**BG80G40-../DHE08LA4**	216	26000	-
0.55	1.6	2700	1.7	907.6	**BG80G40-../DHE08LA4**	216	26000	-
0.55	1.4	3200	1.45	1042	**BG80G40-../DHE08LA4**	216	26000	-
0.55	1.2	3800	1.2	1261	**BG80G40-../DHE08LA4**	216	26000	-
0.55	1.1	4200	1.1	1400	**BG80G40-../DHE08LA4**	216	26000	-
0.55	1.3	3350	2.7	1174	**BG90G50-../DHE08LA4**	326	65000	-
0.55	1.1	4100	2.2	1301	**BG90G50-../DHE08LA4**	326	65000	-
0.55	0.9	5100	1.8	1583	**BG90G50-../DHE08LA4**	326	65000	-
0.55	0.85	5500	1.65	1756	**BG90G50-../DHE08LA4**	326	65000	-
0.55	0.7	6800	1.35	2026	**BG90G50-../DHE08LA4**	326	65000	-
0.55	0.6	8000	1.15	2514	**BG90G50-../DHE08LA4**	326	65000	-
0.55	0.55	8800	1.05	2786	**BG90G50-../DHE08LA4**	326	65000	-
0.55	0.55	7100	2.6	2656	**BG100G50-../DHE08LA4**	513	90000	-
0.55	0.48	8600	2.2	2952	**BG100G50-../DHE08LA4**	513	90000	-
0.55	0.44	9400	1.95	3286	**BG100G50-../DHE08LA4**	513	90000	-
0.55	0.39	10900	1.7	3644	**BG100G50-../DHE08LA4**	513	90000	-
0.55	0.33	13400	1.4	4366	**BG100G50-../DHE08LA4**	513	90000	-
0.55	0.3	15000	1.25	4839	**BG100G50-../DHE08LA4**	513	90000	-

0.75 kW

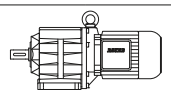

P_N	50 Hz			i	Type	m	F_{RN}	F_{RV}
	n_2	M_2	f_B					
[kW]	[1/min]	[Nm]	[—]	[:1]		[kg]	[N]	[N]
0.75	510	14	1.3	2.82	**BG06-../DHE08XA4**	19	470	-
0.75	380	18.8	1.05	3.78	**BG06-../DHE08XA4**	19	520	-
0.75	315	22.5	0.98	4.54	**BG06-../DHE08XA4**	19	530	-
0.75	240	29.5	0.81	5.96	**BG06-../DHE08XA4**	19	570	-
0.75	330	21.5	3.2	4.36	**BG10-../DHE08XA4**	19	650	910
0.75	270	26.5	2.8	5.34	**BG10-../DHE08XA4**	19	620	910
0.75	210	34	2.6	6.89	**BG10-../DHE08XA4**	19	850	1200
0.75	187	38	2.3	7.63	**BG10-../DHE08XA4**	19	900	1250
0.75	176	40.5	2.2	8.07	**BG10-../DHE08XA4**	19	660	920
0.75	153	46.5	2.1	9.33	**BG10-../DHE08XA4**	19	950	1330
0.75	138	51	1.95	10.34	**BG10-../DHE08XA4**	19	1000	1400
0.75	120	59	1.8	11.92	**BG10-../DHE08XA4**	19	1030	1440
0.75	108	66	1.65	13.21	**BG10-../DHE08XA4**	19	1070	1490
0.75	98	73	1.55	14.58	**BG10-../DHE08XA4**	19	1100	1540
0.75	88	81	1.45	16.15	**BG10-../DHE08XA4**	19	1140	1590
0.75	77	93	1.3	18.51	**BG10-../DHE08XA4**	19	1210	1690
0.75	70	102	1.2	20.51	**BG10-../DHE08XA4**	19	1290	1800
0.75	65	110	1.1	22.04	**BG10-../DHE08XA4**	19	1330	1860
0.75	59	121	0.99	24.42	**BG10-../DHE08XA4**	19	1410	1970
0.75	55	130	0.92	26.26	**BG10-../DHE08XA4**	19	1460	2000
0.75	49	146	0.82	29.09	**BG10-../DHE08XA4**	19	1540	2150
0.75	53	135	1.1	27.08	**BG15-../DHE08XA4**	19	3000	6000
0.75	47.5	150	1.0	30.08	**BG15-../DHE08XA4**	19	3000	6000
0.75	42	170	0.88	34.20	**BG15-../DHE08XA4**	19	3000	6000
0.75	172	41.5	2.9	8.29	**BG20-../DHE08XA4**	22	2250	-
0.75	160	44.5	3.2	8.91	**BG20-../DHE08XA4**	22	2600	-
0.75	148	48	2.5	9.65	**BG20-../DHE08XA4**	22	2250	-
0.75	135	53	2.9	10.54	**BG20-../DHE08XA4**	22	2700	-
0.75	122	58	2.7	11.71	**BG20-../DHE08XA4**	22	2800	-
0.75	108	66	2.5	13.21	**BG20-../DHE08XA4**	22	2900	-
0.75	97	73	2.4	14.67	**BG20-../DHE08XA4**	22	3050	-
0.75	92	77	2.3	15.58	**BG20-../DHE08XA4**	22	3100	-
0.75	83	86	2.1	17.31	**BG20-../DHE08XA4**	22	3200	-

The torques marked (*) are maximum permissible torques for service factor f_B=1,0.

0.75 kW

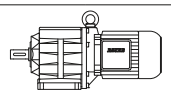

P_N	50 Hz			i	Type	m	F_{RN}	F_{RV}
	n_2	M_2	f_B					
[kW]	[1/min]	[Nm]	[—]	[:1]		[kg]	[N]	[N]
0.75	72	99	1.95	19.95	**BG20-../DHE08XA4**	22	3350	-
0.75	65	110	1.8	22.16	**BG20-../DHE08XA4**	22	3500	-
0.75	62	115	1.75	23.22	**BG20-../DHE08XA4**	22	3550	-
0.75	56	127	1.55	25.79	**BG20-../DHE08XA4**	22	3700	-
0.75	51	140	1.45	27.85	**BG20-../DHE08XA4**	22	3800	-
0.75	46	155	1.3	30.94	**BG20-../DHE08XA4**	22	4000	-
0.75	43	166	1.2	33.33	**BG20-../DHE08XA4**	22	4100	-
0.75	38.5	186	1.1	37.02	**BG20-../DHE08XA4**	22	4300	-
0.75	34.5	205	0.98	41.76	**BG20-../DHE08XA4**	22	4500	-
0.75	31	230	0.87	46.38	**BG20-../DHE08XA4**	22	4700	-
0.75	30	235	0.85	47.92	**BG20-../DHE08XA4**	22	4750	-
0.75	76	94	3.2	18.93	**BG30-../DHE08XA4**	26	4100	-
0.75	72	99	3.0	19.99	**BG30-../DHE08XA4**	26	4200	-
0.75	65	110	2.7	22.18	**BG30-../DHE08XA4**	26	4600	-
0.75	56	127	2.4	25.45	**BG30-../DHE08XA4**	26	4850	-
0.75	51	140	2.1	28.24	**BG30-../DHE08XA4**	26	5100	-
0.75	48	149	2.0	29.83	**BG30-../DHE08XA4**	26	5200	-
0.75	43	166	1.8	33.09	**BG30-../DHE08XA4**	26	5400	-
0.75	40.5	176	1.7	35.17	**BG30-../DHE08XA4**	26	5500	-
0.75	36.5	196	1.55	39.02	**BG30-../DHE08XA4**	26	5800	-
0.75	33.5	210	1.45	42.46	**BG30-../DHE08XA4**	26	5900	-
0.75	30.5	230	1.3	47.11	**BG30-../DHE08XA4**	26	6000	-
0.75	27.5	260	1.15	52.44	**BG30-../DHE08XA4**	26	6000	-
0.75	24.5	290	1.05	58.18	**BG30-../DHE08XA4**	26	6000	-
0.75	23.5	300	1.0	60.79	**BG30-../DHE08XA4**	26	6000	-
0.75	21.5	330	0.91	67.44	**BG30-../DHE08XA4**	26	6000	-
0.75	19.5	365	0.82	73.51	**BG30Z-../DHE08XA4**	28	6000	-
0.75	55	130	3.3	26.01	**BG40-../DHE08XA4**	41	6500	-
0.75	48.5	147	2.9	29.34	**BG40-../DHE08XA4**	41	6800	-
0.75	44	162	2.6	32.57	**BG40-../DHE08XA4**	41	7000	-
0.75	42	170	2.5	34.20	**BG40-../DHE08XA4**	41	7000	-
0.75	37.5	191	2.2	37.96	**BG40-../DHE08XA4**	41	7000	-
0.75	35.5	200	2.1	40.19	**BG40-../DHE08XA4**	41	7000	-
0.75	32	220	1.95	44.62	**BG40-../DHE08XA4**	41	7000	-
0.75	29.5	240	1.75	48.36	**BG40-../DHE08XA4**	41	7000	-
0.75	26.5	270	1.55	53.69	**BG40-../DHE08XA4**	41	7000	-
0.75	24	295	1.45	59.64	**BG40-../DHE08XA4**	41	7000	-
0.75	21.5	330	1.3	66.20	**BG40-../DHE08XA4**	41	7000	-
0.75	21	340	1.25	67.74	**BG40Z-../DHE08XA4**	44	7000	-
0.75	19	375	1.15	75.19	**BG40Z-../DHE08XA4**	44	7000	-
0.75	17.5	405	1.05	82.00	**BG40Z-../DHE08XA4**	44	7000	-
0.75	16	445	0.96	91.02	**BG40Z-../DHE08XA4**	44	7000	-
0.75	15	475	0.89	96.86	**BG40Z-../DHE08XA4**	44	7000	-
0.75	13.5	530	0.8	107.5	**BG40Z-../DHE08XA4**	44	7000	-
0.75	37.5	191	3.3	37.89	**BG50-../DHE08XA4**	48	10000	-
0.75	34	210	3.0	42.00	**BG50-../DHE08XA4**	48	10000	-
0.75	30.5	230	2.7	47.02	**BG50-../DHE08XA4**	48	10000	-
0.75	27.5	260	2.4	52.12	**BG50-../DHE08XA4**	48	10000	-
0.75	24	295	2.1	59.42	**BG50-../DHE08XA4**	48	10000	-
0.75	22	325	1.95	65.86	**BG50-../DHE08XA4**	48	10000	-
0.75	20	355	1.75	71.97	**BG50Z-../DHE08XA4**	53	10000	-
0.75	18	395	1.6	79.78	**BG50Z-../DHE08XA4**	53	10000	-
0.75	15	475	1.35	95.58	**BG50Z-../DHE08XA4**	53	10000	-
0.75	13.5	530	1.2	106.0	**BG50Z-../DHE08XA4**	53	10000	-
0.75	11.5	620	1.0	128.9	**BG50Z-../DHE08XA4**	53	10000	-
0.75	10	710	0.89	142.9	**BG50Z-../DHE08XA4**	53	10000	-
0.75	19	375	3.2	75.71	**BG60Z-../DHE08XA4**	98	16000	-
0.75	16	445	2.7	91.09	**BG60Z-../DHE08XA4**	98	16000	-
0.75	14.5	490	2.4	101.0	**BG60Z-../DHE08XA4**	98	16000	-
0.75	12	590	2.0	119.2	**BG60Z-../DHE08XA4**	98	16000	-
0.75	11	650	1.85	132.1	**BG60Z-../DHE08XA4**	98	16000	-
0.75	9.0	790	1.5	158.0	**BG60Z-../DHE08XA4**	98	16000	-
0.75	8.2	870	1.4	175.1	**BG60Z-../DHE08XA4**	98	16000	-
0.75	7.0	1020	1.2	204.6	**BG60Z-../DHE08XA4**	98	16000	-
0.75	6.3	1130	1.05	226.7	**BG60Z-../DHE08XA4**	98	16000	-
0.75	5.8	1230	0.98	247.7	**BG60Z-../DHE08XA4**	98	16000	-

The torques marked (*) are maximum permissible torques for service factor f_B=1,0.

0.75 kW

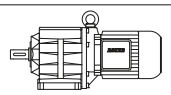

P_N	50 Hz			i	Type	m	F_{RN}	F_{RV}
	n_2	M_2	f_B					
[kW]	[1/min]	[Nm]	[—]	[:1]		[kg]	[N]	[N]
0.75	5.2	1370	0.88	274.5	**BG60Z-../DHE08XA4**	98	16000	-
0.75	4.7	1390	0.94	306.1	**BG60G20-../DHE08XA4**	106	16000	-
0.75	4.3	1520	0.86	334.3	**BG60G20-../DHE08XA4**	106	16000	-
0.75	9.7	730	3.2	147.2	**BG70Z-../DHE08XA4**	138	20000	-
0.75	8.7	820	2.8	163.8	**BG70Z-../DHE08XA4**	138	20000	-
0.75	7.4	960	2.4	194.4	**BG70Z-../DHE08XA4**	138	20000	-
0.75	6.8	1050	2.2	210.5	**BG70Z-../DHE08XA4**	138	20000	-
0.75	5.7	1250	1.85	249.8	**BG70Z-../DHE08XA4**	138	20000	-
0.75	5.6	1170	2.1	255.5	**BG70G20-../DHE08XA4**	136	20000	-
0.75	5.2	1260	2.0	276.7	**BG70G20-../DHE08XA4**	136	20000	-
0.75	4.4	1490	1.7	328.4	**BG70G20-../DHE08XA4**	136	20000	-
0.75	3.7	1780	1.4	387.6	**BG70G20-../DHE08XA4**	136	20000	-
0.75	3.4	1980	1.25	417.8	**BG70G20-../DHE08XA4**	136	20000	-
0.75	2.9	2300	1.1	495.9	**BG70G20-../DHE08XA4**	136	20000	-
0.75	2.5	2700	0.93	577.3	**BG70G20-../DHE08XA4**	136	20000	-
0.75	2.2	3050	0.82	665.8	**BG70G20-../DHE08XA4**	136	20000	-
0.75	4.0	1450	3.2	360.0	**BG80G40-../DHE08XA4**	217	26000	-
0.75	3.6	1610	2.9	399.8	**BG80G40-../DHE08XA4**	217	26000	-
0.75	3.3	1830	2.5	436.2	**BG80G40-../DHE08XA4**	217	26000	-
0.75	3.0	2000	2.3	484.3	**BG80G40-../DHE08XA4**	217	26000	-
0.75	2.5	2450	1.9	572.0	**BG80G40-../DHE08XA4**	217	26000	-
0.75	2.2	2750	1.65	657.8	**BG80G40-../DHE08XA4**	217	26000	-
0.75	2.0	3050	1.5	730.3	**BG80G40-../DHE08XA4**	217	26000	-
0.75	1.8	3450	1.35	817.4	**BG80G40-../DHE08XA4**	217	26000	-
0.75	1.6	3900	1.2	907.6	**BG80G40-../DHE08XA4**	217	26000	-
0.75	1.4	4550	1.0	1042	**BG80G40-../DHE08XA4**	217	26000	-
0.75	1.2	5400	0.85	1261	**BG80G40-../DHE08XA4**	217	26000	-
0.75	2.0	2900	3.2	714.2	**BG90G50-../DHE08XA4**	327	65000	-
0.75	1.7	3500	2.6	883.7	**BG90G50-../DHE08XA4**	327	65000	-
0.75	1.3	4800	1.9	1174	**BG90G50-../DHE08XA4**	327	65000	-
0.75	1.1	5800	1.6	1301	**BG90G50-../DHE08XA4**	327	65000	-
0.75	0.9	7200	1.3	1583	**BG90G50-../DHE08XA4**	327	65000	-
0.75	0.85	7700	1.2	1756	**BG90G50-../DHE08XA4**	327	65000	-
0.75	0.75	8800	1.05	2026	**BG90G50-../DHE08XA4**	327	65000	-
0.75	1.0	5700	3.2	1444	**BG100G50-../DHE08XA4**	514	90000	-
0.75	0.85	6800	2.7	1678	**BG100G50-../DHE08XA4**	514	90000	-
0.75	0.8	7100	2.6	1867	**BG100G50-../DHE08XA4**	514	90000	-
0.75	0.7	8100	2.3	2154	**BG100G50-../DHE08XA4**	514	90000	-
0.75	0.55	10600	1.75	2656	**BG100G50-../DHE08XA4**	514	90000	-
0.75	0.49	12300	1.5	2952	**BG100G50-../DHE08XA4**	514	90000	-
0.75	0.44	13700	1.35	3286	**BG100G50-../DHE08XA4**	514	90000	-
0.75	0.39	15800	1.15	3644	**BG100G50-../DHE08XA4**	514	90000	-

1.1 kW

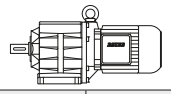

P_N	50 Hz			i	Type	m	F_{RN}	F_{RV}
	n_2	M_2	f_B					
[kW]	[1/min]	[Nm]	[—]	[:1]		[kg]	[N]	[N]
1.1	580	18.1	3.1	2.52	**BG10-../DHE09LA4**	26	570	790
1.1	425	24.5	2.5	3.42	**BG10-../DHE09LA4**	26	630	880
1.1	335	31	2.2	4.36	**BG10-../DHE09LA4**	26	650	910
1.1	270	38.5	1.95	5.34	**BG10-../DHE09LA4**	26	620	910
1.1	215	48.5	1.65	6.78	**BG10-../DHE09LA4**	26	660	920
1.1	210	50	1.75	6.89	**BG10-../DHE09LA4**	26	850	1200
1.1	189	55	1.6	7.63	**BG10-../DHE09LA4**	26	900	1250
1.1	179	58	1.5	8.07	**BG10-../DHE09LA4**	26	660	920
1.1	155	67	1.45	9.33	**BG10-../DHE09LA4**	26	950	1330
1.1	140	75	1.3	10.34	**BG10-../DHE09LA4**	26	1000	1400
1.1	121	86	1.2	11.92	**BG10-../DHE09LA4**	26	1030	1440
1.1	110	95	1.15	13.21	**BG10-../DHE09LA4**	26	1070	1490
1.1	99	106	1.1	14.58	**BG10-../DHE09LA4**	26	1100	1540
1.1	90	116	1.0	16.15	**BG10-../DHE09LA4**	26	1140	1590
1.1	78	134	0.9	18.51	**BG10-../DHE09LA4**	26	1210	1690

The torques marked (*) are maximum permissible torques for service factor f_B=1,0.

1.1 kW

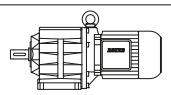

P_N	50 Hz			i	Type	m	F_{RN}	F_{RV}
	n_2	M_2	f_B					
[kW]	[1/min]	[Nm]	[—]	[:1]		[kg]	[N]	[N]
1.1	71	147	0.82	20.51	**BG10-../DHE09LA4**	26	1290	1800
1.1	330	31.5	3.3	4.38	**BG20-../DHE09LA4**	28	1990	-
1.1	265	39.5	2.9	5.49	**BG20-../DHE09LA4**	28	2100	-
1.1	240	43.5	2.9	6.06	**BG20-../DHE09LA4**	28	2250	-
1.1	225	46.5	2.6	6.48	**BG20-../DHE09LA4**	28	2250	-
1.1	215	48.5	2.7	6.73	**BG20-../DHE09LA4**	28	2350	2100
1.1	180	58	2.4	8.02	**BG20-../DHE09LA4**	28	2500	-
1.1	174	60	2.0	8.29	**BG20-../DHE09LA4**	28	2250	-
1.1	162	64	2.2	8.91	**BG20-../DHE09LA4**	28	2600	-
1.1	150	70	1.75	9.65	**BG20-../DHE09LA4**	28	2250	-
1.1	137	76	2.0	10.54	**BG20-../DHE09LA4**	28	2700	-
1.1	123	85	1.85	11.71	**BG20-../DHE09LA4**	28	2800	-
1.1	110	95	1.75	13.21	**BG20-../DHE09LA4**	28	2900	-
1.1	99	106	1.6	14.67	**BG20-../DHE09LA4**	28	3050	-
1.1	93	112	1.6	15.58	**BG20-../DHE09LA4**	28	3100	-
1.1	84	125	1.45	17.31	**BG20-../DHE09LA4**	28	3200	-
1.1	73	143	1.35	19.95	**BG20-../DHE09LA4**	28	3350	-
1.1	65	161	1.25	22.16	**BG20-../DHE09LA4**	28	3500	-
1.1	63	166	1.2	23.22	**BG20-../DHE09LA4**	28	3550	-
1.1	56	187	1.05	25.79	**BG20-../DHE09LA4**	28	3700	-
1.1	52	200	1.0	27.85	**BG20-../DHE09LA4**	28	3800	-
1.1	47	220	0.91	30.94	**BG20-../DHE09LA4**	28	4000	-
1.1	43.5	240	0.83	33.33	**BG20-../DHE09LA4**	28	4100	-
1.1	122	86	3.2	11.82	**BG30-../DHE09LA4**	33	3200	-
1.1	105	100	2.9	13.77	**BG30-../DHE09LA4**	33	3150	-
1.1	95	110	2.7	15.27	**BG30-../DHE09LA4**	33	3450	-
1.1	85	123	2.4	17.06	**BG30-../DHE09LA4**	33	3700	-
1.1	77	136	2.2	18.93	**BG30-../DHE09LA4**	33	4100	-
1.1	73	143	2.1	19.99	**BG30-../DHE09LA4**	33	4200	-
1.1	65	161	1.85	22.18	**BG30-../DHE09LA4**	33	4600	-
1.1	57	184	1.65	25.45	**BG30-../DHE09LA4**	33	4850	-
1.1	51	205	1.45	28.24	**BG30-../DHE09LA4**	33	5100	-
1.1	48.5	215	1.4	29.83	**BG30-../DHE09LA4**	33	5200	-
1.1	44	235	1.3	33.09	**BG30-../DHE09LA4**	33	5400	-
1.1	41	255	1.2	35.17	**BG30-../DHE09LA4**	33	5500	-
1.1	37	280	1.05	39.02	**BG30-../DHE09LA4**	33	5800	-
1.1	34	305	0.98	42.46	**BG30-../DHE09LA4**	33	5900	-
1.1	31	335	0.9	47.11	**BG30-../DHE09LA4**	33	6000	-
1.1	80	131	3.2	18.19	**BG40-../DHE09LA4**	47	5600	-
1.1	73	143	3.0	19.84	**BG40-../DHE09LA4**	47	5800	-
1.1	66	159	2.7	22.02	**BG40-../DHE09LA4**	47	6000	-
1.1	62	169	2.5	23.43	**BG40-../DHE09LA4**	47	6200	-
1.1	56	187	2.3	26.01	**BG40-../DHE09LA4**	47	6500	-
1.1	49.5	210	2.0	29.34	**BG40-../DHE09LA4**	47	6800	-
1.1	44.5	235	1.8	32.57	**BG40-../DHE09LA4**	47	7000	-
1.1	42.5	245	1.75	34.20	**BG40-../DHE09LA4**	47	7000	-
1.1	38	275	1.55	37.96	**BG40-../DHE09LA4**	47	7000	-
1.1	36	290	1.45	40.19	**BG40-../DHE09LA4**	47	7000	-
1.1	32.5	320	1.35	44.62	**BG40-../DHE09LA4**	47	7000	-
1.1	30	350	1.2	48.36	**BG40-../DHE09LA4**	47	7000	-
1.1	27	385	1.1	53.69	**BG40-../DHE09LA4**	47	7000	-
1.1	24.5	425	1.0	59.64	**BG40-../DHE09LA4**	47	7000	-
1.1	22	475	0.89	66.20	**BG40-../DHE09LA4**	47	7000	-
1.1	21.5	485	0.88	67.74	**BG40Z-../DHE09LA4**	51	7000	-
1.1	19.5	530	0.8	75.19	**BG40Z-../DHE09LA4**	51	7000	-
1.1	49	210	3.0	29.62	**BG50-../DHE09LA4**	55	8000	-
1.1	44	235	2.7	32.84	**BG50-../DHE09LA4**	55	8700	-
1.1	38.5	270	2.3	37.89	**BG50-../DHE09LA4**	55	10000	-
1.1	34.5	300	2.1	42.00	**BG50-../DHE09LA4**	55	10000	-
1.1	31	335	1.9	47.02	**BG50-../DHE09LA4**	55	10000	-
1.1	28	375	1.7	52.12	**BG50-../DHE09LA4**	55	10000	-
1.1	24.5	425	1.5	59.42	**BG50-../DHE09LA4**	55	10000	-
1.1	22	475	1.35	65.86	**BG50-../DHE09LA4**	55	10000	-
1.1	20.5	510	1.25	71.97	**BG50Z-../DHE09LA4**	60	10000	-
1.1	18.5	560	1.15	79.78	**BG50Z-../DHE09LA4**	60	10000	-
1.1	15.5	670	0.94	95.58	**BG50Z-../DHE09LA4**	60	10000	-

The torques marked (*) are maximum permissible torques for service factor f_B=1,0.

1.1 kW

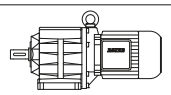

P_N	50 Hz			i	Type	m	F_{RN}	F_{RV}
	n_2	M_2	f_B					
[kW]	[1/min]	[Nm]	[—]	[:1]		[kg]	[N]	[N]
1.1	14	750	0.84	106.0	**BG50Z-../DHE09LA4**	60	10000	-
1.1	29	360	3.3	50.31	**BG60-../DHE09LA4**	86	16000	-
1.1	26	400	3.0	55.76	**BG60-../DHE09LA4**	86	16000	-
1.1	24	435	2.8	60.90	**BG60-../DHE09LA4**	86	16000	-
1.1	21.5	485	2.5	67.49	**BG60-../DHE09LA4**	86	16000	-
1.1	19.5	530	2.3	75.71	**BG60Z-../DHE09LA4**	105	16000	-
1.1	16	650	1.85	91.09	**BG60Z-../DHE09LA4**	105	16000	-
1.1	14.5	720	1.65	101.0	**BG60Z-../DHE09LA4**	105	16000	-
1.1	12.5	840	1.45	119.2	**BG60Z-../DHE09LA4**	105	16000	-
1.1	11	950	1.25	132.1	**BG60Z-../DHE09LA4**	105	16000	-
1.1	9.2	1140	1.05	158.0	**BG60Z-../DHE09LA4**	105	16000	-
1.1	8.3	1260	0.95	175.1	**BG60Z-../DHE09LA4**	105	16000	-
1.1	7.1	1470	0.82	204.6	**BG60Z-../DHE09LA4**	105	16000	-
1.1	13	800	2.9	113.6	**BG70Z-../DHE09LA4**	145	20000	-
1.1	12	870	2.6	124.0	**BG70Z-../DHE09LA4**	145	20000	-
1.1	9.8	1070	2.1	147.2	**BG70Z-../DHE09LA4**	145	20000	-
1.1	8.8	1190	1.95	163.8	**BG70Z-../DHE09LA4**	145	20000	-
1.1	7.5	1400	1.65	194.4	**BG70Z-../DHE09LA4**	145	20000	-
1.1	6.9	1520	1.5	210.5	**BG70Z-../DHE09LA4**	145	20000	-
1.1	5.8	1810	1.25	249.8	**BG70Z-../DHE09LA4**	145	20000	-
1.1	5.7	1730	1.45	255.5	**BG70G20-../DHE09LA4**	142	20000	-
1.1	5.3	1860	1.35	276.7	**BG70G20-../DHE09LA4**	142	20000	-
1.1	4.4	2200	1.15	328.4	**BG70G20-../DHE09LA4**	142	20000	-
1.1	3.8	2600	0.96	387.6	**BG70G20-../DHE09LA4**	142	20000	-
1.1	3.5	2850	0.88	417.8	**BG70G20-../DHE09LA4**	142	20000	-
1.1	7.8	1340	3.1	186.8	**BG80Z-../DHE09LA4**	213	26000	-
1.1	7.0	1500	2.8	207.4	**BG80Z-../DHE09LA4**	213	26000	-
1.1	5.8	1500	3.1	252.3	**BG80G40-../DHE09LA4**	224	26000	-
1.1	5.1	1750	2.6	282.8	**BG80G40-../DHE09LA4**	224	26000	-
1.1	4.6	1940	2.4	314.0	**BG80G40-../DHE09LA4**	224	26000	-
1.1	4.0	2250	2.0	360.0	**BG80G40-../DHE09LA4**	224	26000	-
1.1	3.7	2450	1.9	399.8	**BG80G40-../DHE09LA4**	224	26000	-
1.1	3.4	2750	1.65	436.2	**BG80G40-../DHE09LA4**	224	26000	-
1.1	3.0	3100	1.5	484.3	**BG80G40-../DHE09LA4**	224	26000	-
1.1	2.6	3650	1.25	572.0	**BG80G40-../DHE09LA4**	224	26000	-
1.1	2.2	4250	1.1	657.8	**BG80G40-../DHE09LA4**	224	26000	-
1.1	2.0	4750	0.97	730.3	**BG80G40-../DHE09LA4**	224	26000	-
1.1	1.8	5300	0.87	817.4	**BG80G40-../DHE09LA4**	224	26000	-
1.1	2.9	3100	3.0	504.7	**BG90G50-../DHE09LA4**	334	65000	-
1.1	2.5	3600	2.6	588.8	**BG90G50-../DHE09LA4**	334	65000	-
1.1	2.3	3950	2.3	644.7	**BG90G50-../DHE09LA4**	334	65000	-
1.1	2.1	4350	2.1	714.2	**BG90G50-../DHE09LA4**	334	65000	-
1.1	1.7	5500	1.65	883.7	**BG90G50-../DHE09LA4**	334	65000	-
1.1	1.3	7400	1.25	1174	**BG90G50-../DHE09LA4**	334	65000	-
1.1	1.2	8000	1.15	1301	**BG90G50-../DHE09LA4**	334	65000	-
1.1	1.8	5800	3.2	845.1	**BG100Z-../DHE09LA4**	522	90000	-
1.1	1.4	6100	3.0	1043	**BG100G50-../DHE09LA4**	521	90000	-
1.1	1.2	7100	2.6	1204	**BG100G50-../DHE09LA4**	521	90000	-
1.1	1.0	9100	2.0	1444	**BG100G50-../DHE09LA4**	521	90000	-
1.1	0.9	10000	1.85	1678	**BG100G50-../DHE09LA4**	521	90000	-
1.1	0.8	11300	1.65	1867	**BG100G50-../DHE09LA4**	521	90000	-
1.1	0.7	12900	1.45	2154	**BG100G50-../DHE09LA4**	521	90000	-
1.1	0.55	16700	1.1	2656	**BG100G50-../DHE09LA4**	521	90000	-

1.5 kW

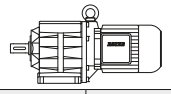

P_N	50 Hz			i	Type	m	F_{RN}	F_{RV}
	n_2	M_2	f_B					
[kW]	[1/min]	[Nm]	[—]	[:1]		[kg]	[N]	[N]
1.5	580	24.5	2.3	2.52	**BG10-../DHE09XA4**	30	570	790
1.5	425	33.5	1.85	3.42	**BG10-../DHE09XA4**	30	630	880
1.5	335	42.5	1.6	4.36	**BG10-../DHE09XA4**	30	650	910

The torques marked (*) are maximum permissible torques for service factor f_B=1,0.

1.5 kW

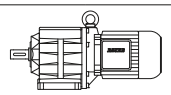

P_N	50 Hz			i	Type	m	F_{RN}	F_{RV}
	n_2	M_2	f_B					
[kW]	[1/min]	[Nm]	[—]	[:1]		[kg]	[N]	[N]
1.5	270	53	1.4	5.34	**BG10-../DHE09XA4**	30	620	910
1.5	215	66	1.25	6.78	**BG10-../DHE09XA4**	30	660	920
1.5	210	68	1.3	6.89	**BG10-../DHE09XA4**	30	850	1200
1.5	189	75	1.2	7.63	**BG10-../DHE09XA4**	30	900	1250
1.5	179	80	1.1	8.07	**BG10-../DHE09XA4**	30	660	920
1.5	155	92	1.05	9.33	**BG10-../DHE09XA4**	30	950	1330
1.5	140	102	0.97	10.34	**BG10-../DHE09XA4**	30	1000	1400
1.5	121	118	0.89	11.92	**BG10-../DHE09XA4**	30	1030	1440
1.5	110	130	0.85	13.21	**BG10-../DHE09XA4**	30	1070	1490
1.5	435	32.5	2.8	3.33	**BG20-../DHE09XA4**	32	1830	-
1.5	330	43	2.4	4.38	**BG20-../DHE09XA4**	32	1990	-
1.5	265	54	2.1	5.49	**BG20-../DHE09XA4**	32	2100	-
1.5	240	59	2.1	6.06	**BG20-../DHE09XA4**	32	2250	-
1.5	225	63	1.95	6.48	**BG20-../DHE09XA4**	32	2250	-
1.5	215	66	1.95	6.73	**BG20-../DHE09XA4**	32	2350	2100
1.5	180	79	1.75	8.02	**BG20-../DHE09XA4**	32	2500	-
1.5	174	82	1.5	8.29	**BG20-../DHE09XA4**	32	2250	-
1.5	162	88	1.65	8.91	**BG20-../DHE09XA4**	32	2600	-
1.5	150	95	1.3	9.65	**BG20-../DHE09XA4**	32	2250	-
1.5	137	104	1.5	10.54	**BG20-../DHE09XA4**	32	2700	-
1.5	123	116	1.35	11.71	**BG20-../DHE09XA4**	32	2800	-
1.5	110	130	1.3	13.21	**BG20-../DHE09XA4**	32	2900	-
1.5	99	144	1.2	14.67	**BG20-../DHE09XA4**	32	3050	-
1.5	93	154	1.15	15.58	**BG20-../DHE09XA4**	32	3100	-
1.5	84	170	1.1	17.31	**BG20-../DHE09XA4**	32	3200	-
1.5	73	196	0.99	19.95	**BG20-../DHE09XA4**	32	3350	-
1.5	65	220	0.91	22.16	**BG20-../DHE09XA4**	32	3500	-
1.5	63	225	0.89	23.22	**BG20-../DHE09XA4**	32	3550	-
1.5	215	66	3.3	6.75	**BG30-../DHE09XA4**	37	1760	-
1.5	192	74	3.1	7.50	**BG30-../DHE09XA4**	37	2750	-
1.5	183	78	2.8	7.91	**BG30-../DHE09XA4**	37	1760	-
1.5	168	85	2.9	8.60	**BG30-../DHE09XA4**	37	2800	-
1.5	151	94	2.7	9.55	**BG30-../DHE09XA4**	37	3000	-
1.5	136	105	2.5	10.65	**BG30-../DHE09XA4**	37	2950	-
1.5	122	117	2.3	11.82	**BG30-../DHE09XA4**	37	3200	-
1.5	105	136	2.2	13.77	**BG30-../DHE09XA4**	37	3150	-
1.5	95	150	2.0	15.27	**BG30-../DHE09XA4**	37	3450	-
1.5	85	168	1.8	17.06	**BG30-../DHE09XA4**	37	3700	-
1.5	77	186	1.6	18.93	**BG30-../DHE09XA4**	37	4100	-
1.5	73	196	1.55	19.99	**BG30-../DHE09XA4**	37	4200	-
1.5	65	220	1.35	22.18	**BG30-../DHE09XA4**	37	4600	-
1.5	57	250	1.2	25.45	**BG30-../DHE09XA4**	37	4850	-
1.5	51	280	1.05	28.24	**BG30-../DHE09XA4**	37	5100	-
1.5	48.5	295	1.0	29.83	**BG30-../DHE09XA4**	37	5200	-
1.5	44	325	0.92	33.09	**BG30-../DHE09XA4**	37	5400	-
1.5	41	345	0.87	35.17	**BG30-../DHE09XA4**	37	5500	-
1.5	160	89	3.3	9.00	**BG40-../DHE09XA4**	51	2650	-
1.5	112	127	3.2	12.86	**BG40-../DHE09XA4**	51	4500	-
1.5	101	141	3.0	14.28	**BG40-../DHE09XA4**	51	4900	-
1.5	88	162	2.6	16.39	**BG40-../DHE09XA4**	51	5300	-
1.5	80	179	2.4	18.19	**BG40-../DHE09XA4**	51	5600	-
1.5	73	196	2.2	19.84	**BG40-../DHE09XA4**	51	5800	-
1.5	66	215	2.0	22.02	**BG40-../DHE09XA4**	51	6000	-
1.5	62	230	1.85	23.43	**BG40-../DHE09XA4**	51	6200	-
1.5	56	255	1.65	26.01	**BG40-../DHE09XA4**	51	6500	-
1.5	49.5	285	1.5	29.34	**BG40-../DHE09XA4**	51	6800	-
1.5	44.5	320	1.35	32.57	**BG40-../DHE09XA4**	51	7000	-
1.5	42.5	335	1.25	34.20	**BG40-../DHE09XA4**	51	7000	-
1.5	38	375	1.15	37.96	**BG40-../DHE09XA4**	51	7000	-
1.5	36	395	1.1	40.19	**BG40-../DHE09XA4**	51	7000	-
1.5	32.5	440	0.97	44.62	**BG40-../DHE09XA4**	51	7000	-
1.5	30	475	0.89	48.36	**BG40-../DHE09XA4**	51	7000	-
1.5	27	530	0.8	53.69	**BG40-../DHE09XA4**	51	7000	-
1.5	66	215	2.9	21.96	**BG50-../DHE09XA4**	59	8000	-
1.5	60	235	2.7	24.34	**BG50-../DHE09XA4**	59	8700	-
1.5	49	290	2.2	29.62	**BG50-../DHE09XA4**	59	8000	-

The torques marked (*) are maximum permissible torques for service factor f_B=1,0.

1.5 kW

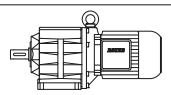

P_N	50 Hz			i	Type	m	F_{RN}	F_{RV}
	n_2	M_2	f_B					
[kW]	[1/min]	[Nm]	[—]	[:1]		[kg]	[N]	[N]
1.5	44	325	1.95	32.84	**BG50-../DHE09XA4**	59	8700	-
1.5	38.5	370	1.7	37.89	**BG50-../DHE09XA4**	59	10000	-
1.5	34.5	415	1.5	42.00	**BG50-../DHE09XA4**	59	10000	-
1.5	31	460	1.35	47.02	**BG50-../DHE09XA4**	59	10000	-
1.5	28	510	1.25	52.12	**BG50-../DHE09XA4**	59	10000	-
1.5	24.5	580	1.1	59.42	**BG50-../DHE09XA4**	59	10000	-
1.5	22	650	0.97	65.86	**BG50-../DHE09XA4**	59	10000	-
1.5	20.5	690	0.91	71.97	**BG50Z-../DHE09XA4**	64	10000	-
1.5	18.5	770	0.82	79.78	**BG50Z-../DHE09XA4**	64	10000	-
1.5	37.5	380	3.2	38.85	**BG60-../DHE09XA4**	90	16000	-
1.5	33.5	425	2.8	43.05	**BG60-../DHE09XA4**	90	16000	-
1.5	29	490	2.4	50.31	**BG60-../DHE09XA4**	90	16000	-
1.5	26	550	2.2	55.76	**BG60-../DHE09XA4**	90	16000	-
1.5	24	590	2.0	60.90	**BG60-../DHE09XA4**	90	16000	-
1.5	21.5	660	1.8	67.49	**BG60-../DHE09XA4**	90	16000	-
1.5	19.5	730	1.65	75.71	**BG60Z-../DHE09XA4**	109	16000	-
1.5	16	890	1.35	91.09	**BG60Z-../DHE09XA4**	109	16000	-
1.5	14.5	980	1.2	101.0	**BG60Z-../DHE09XA4**	109	16000	-
1.5	12.5	1140	1.05	119.2	**BG60Z-../DHE09XA4**	109	16000	-
1.5	11	1300	0.92	132.1	**BG60Z-../DHE09XA4**	109	16000	-
1.5	20	710	3.2	73.82	**BG70Z-../DHE09XA4**	149	20000	-
1.5	16.5	860	2.7	87.61	**BG70Z-../DHE09XA4**	149	20000	-
1.5	15.5	920	2.5	95.74	**BG70Z-../DHE09XA4**	149	20000	-
1.5	13	1100	2.1	113.6	**BG70Z-../DHE09XA4**	149	20000	-
1.5	12	1190	1.95	124.0	**BG70Z-../DHE09XA4**	149	20000	-
1.5	9.8	1460	1.6	147.2	**BG70Z-../DHE09XA4**	149	20000	-
1.5	8.8	1620	1.4	163.8	**BG70Z-../DHE09XA4**	149	20000	-
1.5	7.5	1910	1.2	194.4	**BG70Z-../DHE09XA4**	149	20000	-
1.5	6.9	2050	1.1	210.5	**BG70Z-../DHE09XA4**	149	20000	-
1.5	5.8	2450	0.94	249.8	**BG70Z-../DHE09XA4**	149	20000	-
1.5	5.7	2400	1.05	255.5	**BG70G20-../DHE09XA4**	146	20000	-
1.5	5.3	2550	0.98	276.7	**BG70G20-../DHE09XA4**	146	20000	-
1.5	4.4	3100	0.81	328.4	**BG70G20-../DHE09XA4**	146	20000	-
1.5	10	1430	2.9	145.4	**BG80Z-../DHE09XA4**	217	26000	-
1.5	9.0	1590	2.6	161.5	**BG80Z-../DHE09XA4**	217	26000	-
1.5	7.8	1830	2.3	186.8	**BG80Z-../DHE09XA4**	217	26000	-
1.5	7.0	2000	2.1	207.4	**BG80Z-../DHE09XA4**	217	26000	-
1.5	6.4	1950	2.4	227.2	**BG80G40-../DHE09XA4**	228	26000	-
1.5	5.8	2150	2.1	252.3	**BG80G40-../DHE09XA4**	228	26000	-
1.5	5.1	2500	1.85	282.8	**BG80G40-../DHE09XA4**	228	26000	-
1.5	4.6	2750	1.65	314.0	**BG80G40-../DHE09XA4**	228	26000	-
1.5	4.0	3200	1.45	360.0	**BG80G40-../DHE09XA4**	228	26000	-
1.5	3.7	3450	1.35	399.8	**BG80G40-../DHE09XA4**	228	26000	-
1.5	3.4	3850	1.2	436.2	**BG80G40-../DHE09XA4**	228	26000	-
1.5	3.0	4350	1.05	484.3	**BG80G40-../DHE09XA4**	228	26000	-
1.5	2.6	5100	0.9	572.0	**BG80G40-../DHE09XA4**	228	26000	-
1.5	4.0	3100	3.0	360.3	**BG90G50-../DHE09XA4**	338	65000	-
1.5	3.4	3800	2.4	435.8	**BG90G50-../DHE09XA4**	338	65000	-
1.5	2.9	4450	2.1	504.7	**BG90G50-../DHE09XA4**	338	65000	-
1.5	2.5	5100	1.8	588.8	**BG90G50-../DHE09XA4**	338	65000	-
1.5	2.3	5600	1.65	644.7	**BG90G50-../DHE09XA4**	338	65000	-
1.5	2.1	6100	1.5	714.2	**BG90G50-../DHE09XA4**	338	65000	-
1.5	1.7	7700	1.2	883.7	**BG90G50-../DHE09XA4**	338	65000	-
1.5	1.3	10300	0.89	1174	**BG90G50-../DHE09XA4**	338	65000	-
1.5	1.2	11200	0.82	1301	**BG90G50-../DHE09XA4**	338	65000	-
1.5	2.5	5700	3.2	591.1	**BG100Z-../DHE09XA4**	526	90000	-
1.5	2.2	6500	2.8	658.1	**BG100Z-../DHE09XA4**	526	90000	-
1.5	1.9	7500	2.5	759.0	**BG100Z-../DHE09XA4**	526	90000	-
1.5	1.8	7900	2.3	845.1	**BG100Z-../DHE09XA4**	526	90000	-
1.5	1.5	7900	2.3	976.1	**BG100G50-../DHE09XA4**	525	90000	-
1.5	1.4	8800	2.1	1043	**BG100G50-../DHE09XA4**	525	90000	-
1.5	1.2	10300	1.8	1204	**BG100G50-../DHE09XA4**	525	90000	-
1.5	1.0	12900	1.45	1444	**BG100G50-../DHE09XA4**	525	90000	-
1.5	0.9	14300	1.3	1678	**BG100G50-../DHE09XA4**	525	90000	-
1.5	0.8	16100	1.15	1867	**BG100G50-../DHE09XA4**	525	90000	-

The torques marked (*) are maximum permissible torques for service factor f_B=1,0.

1.5 kW

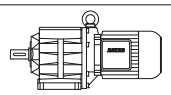

P_N	50 Hz			i	Type	m	F_{RN}	F_{RV}
	n_2	M_2	f_B					
[kW]	[1/min]	[Nm]	[—]	[:1]		[kg]	[N]	[N]
1.5	0.7	18400	1.0	2154	**BG100G50-../DHE09XA4**	525	90000	-

2.2 kW

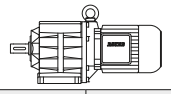

P_N	50 Hz			i	Type	m	F_{RN}	F_{RV}
	n_2	M_2	f_B					
[kW]	[1/min]	[Nm]	[—]	[:1]		[kg]	[N]	[N]
2.2	580	36	1.55	2.52	**BG10-../DHE09XA4C**	32	570	790
2.2	425	49	1.25	3.42	**BG10-../DHE09XA4C**	32	630	880
2.2	335	62	1.1	4.36	**BG10-../DHE09XA4C**	32	650	910
2.2	270	77	0.97	5.34	**BG10-../DHE09XA4C**	32	620	910
2.2	215	97	0.84	6.78	**BG10-../DHE09XA4C**	32	660	920
2.2	210	100	0.88	6.89	**BG10-../DHE09XA4C**	32	850	1200
2.2	189	111	0.8	7.63	**BG10-../DHE09XA4C**	32	900	1250
2.2	580	36	2.3	2.52	**BG20-../DHE09XA4C**	35	1650	-
2.2	435	48	1.9	3.33	**BG20-../DHE09XA4C**	35	1830	-
2.2	330	63	1.65	4.38	**BG20-../DHE09XA4C**	35	1990	-
2.2	265	79	1.45	5.49	**BG20-../DHE09XA4C**	35	2100	-
2.2	240	87	1.45	6.06	**BG20-../DHE09XA4C**	35	2250	-
2.2	225	93	1.3	6.48	**BG20-../DHE09XA4C**	35	2250	-
2.2	215	97	1.35	6.73	**BG20-../DHE09XA4C**	35	2350	2100
2.2	180	116	1.2	8.02	**BG20-../DHE09XA4C**	35	2500	-
2.2	174	120	1.0	8.29	**BG20-../DHE09XA4C**	35	2250	-
2.2	162	129	1.1	8.91	**BG20-../DHE09XA4C**	35	2600	-
2.2	150	140	0.87	9.65	**BG20-../DHE09XA4C**	35	2250	-
2.2	137	153	1.0	10.54	**BG20-../DHE09XA4C**	35	2700	-
2.2	123	170	0.93	11.71	**BG20-../DHE09XA4C**	35	2800	-
2.2	110	191	0.87	13.21	**BG20-../DHE09XA4C**	35	2900	-
2.2	99	210	0.82	14.67	**BG20-../DHE09XA4C**	35	3050	-
2.2	540	38.5	3.3	2.67	**BG30-../DHE09XA4C**	39	1450	-
2.2	425	49	2.8	3.40	**BG30-../DHE09XA4C**	39	1580	-
2.2	345	60	2.9	4.21	**BG30-../DHE09XA4C**	39	1630	-
2.2	265	79	2.5	5.44	**BG30-../DHE09XA4C**	39	1670	-
2.2	215	97	2.3	6.76	**BG30-../DHE09XA4C**	39	2550	-
2.2	192	109	2.1	7.50	**BG30-../DHE09XA4C**	39	2750	-
2.2	183	114	1.9	7.91	**BG30-../DHE09XA4C**	39	1760	-
2.2	168	125	1.95	8.60	**BG30-../DHE09XA4C**	39	2800	-
2.2	151	139	1.85	9.55	**BG30-../DHE09XA4C**	39	3000	-
2.2	136	154	1.75	10.65	**BG30-../DHE09XA4C**	39	2950	-
2.2	122	172	1.6	11.82	**BG30-../DHE09XA4C**	39	3200	-
2.2	105	200	1.45	13.77	**BG30-../DHE09XA4C**	39	3150	-
2.2	95	220	1.35	15.27	**BG30-../DHE09XA4C**	39	3450	-
2.2	85	245	1.2	17.06	**BG30-../DHE09XA4C**	39	3700	-
2.2	77	270	1.1	18.93	**BG30-../DHE09XA4C**	39	4100	-
2.2	73	285	1.05	19.99	**BG30-../DHE09XA4C**	39	4200	-
2.2	65	320	0.94	22.18	**BG30-../DHE09XA4C**	39	4600	-
2.2	57	365	0.82	25.45	**BG30-../DHE09XA4C**	39	4850	-
2.2	230	91	3.2	6.29	**BG40-../DHE09XA4C**	54	2600	-
2.2	205	102	3.2	7.11	**BG40-../DHE09XA4C**	54	3950	-
2.2	189	111	2.7	7.62	**BG40-../DHE09XA4C**	54	2650	-
2.2	174	120	2.9	8.31	**BG40-../DHE09XA4C**	54	4100	-
2.2	157	133	2.7	9.23	**BG40-../DHE09XA4C**	54	4350	-
2.2	140	150	2.5	10.35	**BG40-../DHE09XA4C**	54	4350	-
2.2	126	166	2.3	11.49	**BG40-../DHE09XA4C**	54	4600	-
2.2	112	187	2.2	12.86	**BG40-../DHE09XA4C**	54	4500	-
2.2	101	205	2.1	14.28	**BG40-../DHE09XA4C**	54	4900	-
2.2	88	235	1.8	16.39	**BG40-../DHE09XA4C**	54	5300	-
2.2	80	260	1.65	18.19	**BG40-../DHE09XA4C**	54	5600	-
2.2	73	285	1.5	19.84	**BG40-../DHE09XA4C**	54	5800	-
2.2	66	315	1.35	22.02	**BG40-../DHE09XA4C**	54	6000	-
2.2	62	335	1.25	23.43	**BG40-../DHE09XA4C**	54	6200	-
2.2	56	375	1.15	26.01	**BG40-../DHE09XA4C**	54	6500	-
2.2	49.5	420	1.0	29.34	**BG40-../DHE09XA4C**	54	6800	-
2.2	44.5	470	0.9	32.57	**BG40-../DHE09XA4C**	54	7000	-

The torques marked (*) are maximum permissible torques for service factor f_B=1,0.

2.2 kW

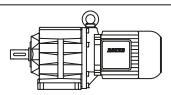

P_N	50 Hz			i	Type	m	F_{RN}	F_{RV}
	n_2	M_2	f_B					
[kW]	[1/min]	[Nm]	[—]	[:1]		[kg]	[N]	[N]
2.2	42.5	490	0.87	34.20	**BG40-../DHE09XA4C**	54	7000	-
2.2	120	175	3.3	12.06	**BG50-../DHE09XA4C**	62	5700	-
2.2	108	194	3.1	13.36	**BG50-../DHE09XA4C**	62	6100	-
2.2	88	235	2.7	16.53	**BG50-../DHE09XA4C**	62	6500	-
2.2	79	265	2.4	18.33	**BG50-../DHE09XA4C**	62	7200	-
2.2	66	315	2.0	21.96	**BG50-../DHE09XA4C**	62	8000	-
2.2	60	350	1.8	24.34	**BG50-../DHE09XA4C**	62	8700	-
2.2	49	425	1.5	29.62	**BG50-../DHE09XA4C**	62	8000	-
2.2	44	475	1.35	32.84	**BG50-../DHE09XA4C**	62	8700	-
2.2	38.5	540	1.15	37.89	**BG50-../DHE09XA4C**	62	10000	-
2.2	34.5	600	1.05	42.00	**BG50-../DHE09XA4C**	62	10000	-
2.2	31	670	0.94	47.02	**BG50-../DHE09XA4C**	62	10000	-
2.2	28	750	0.84	52.12	**BG50-../DHE09XA4C**	62	10000	-
2.2	49.5	420	2.9	29.31	**BG60-../DHE09XA4C**	92	14800	-
2.2	44.5	470	2.6	32.48	**BG60-../DHE09XA4C**	92	15400	-
2.2	37.5	560	2.1	38.85	**BG60-../DHE09XA4C**	92	16000	-
2.2	33.5	620	1.95	43.05	**BG60-../DHE09XA4C**	92	16000	-
2.2	29	720	1.65	50.31	**BG60-../DHE09XA4C**	92	16000	-
2.2	26	800	1.5	55.76	**BG60-../DHE09XA4C**	92	16000	-
2.2	24	870	1.4	60.90	**BG60-../DHE09XA4C**	92	16000	-
2.2	21.5	970	1.25	67.49	**BG60-../DHE09XA4C**	92	16000	-
2.2	19.5	1070	1.1	75.71	**BG60Z-../DHE09XA4C**	112	16000	-
2.2	16	1310	0.92	91.09	**BG60Z-../DHE09XA4C**	112	16000	-
2.2	14.5	1440	0.83	101.0	**BG60Z-../DHE09XA4C**	112	16000	-
2.2	29	720	3.2	50.40	**BG70-../DHE09XA4C**	130	20000	-
2.2	24.5	850	2.7	59.82	**BG70-../DHE09XA4C**	130	20000	-
2.2	22.5	930	2.5	64.85	**BG70Z-../DHE09XA4C**	151	20000	-
2.2	20	1050	2.2	73.82	**BG70Z-../DHE09XA4C**	151	20000	-
2.2	16.5	1270	1.8	87.61	**BG70Z-../DHE09XA4C**	151	20000	-
2.2	15.5	1350	1.7	95.74	**BG70Z-../DHE09XA4C**	151	20000	-
2.2	13	1610	1.45	113.6	**BG70Z-../DHE09XA4C**	151	20000	-
2.2	12	1750	1.3	124.0	**BG70Z-../DHE09XA4C**	151	20000	-
2.2	9.8	2100	1.1	147.2	**BG70Z-../DHE09XA4C**	151	20000	-
2.2	8.8	2350	0.98	163.8	**BG70Z-../DHE09XA4C**	151	20000	-
2.2	7.5	2800	0.82	194.4	**BG70Z-../DHE09XA4C**	151	20000	-
2.2	15.5	1350	3.1	93.89	**BG80Z-../DHE09XA4C**	219	26000	-
2.2	13	1610	2.6	112.4	**BG80Z-../DHE09XA4C**	219	26000	-
2.2	12	1750	2.4	124.8	**BG80Z-../DHE09XA4C**	219	26000	-
2.2	10	2100	2.0	145.4	**BG80Z-../DHE09XA4C**	219	26000	-
2.2	9.0	2300	1.85	161.5	**BG80Z-../DHE09XA4C**	219	26000	-
2.2	7.8	2650	1.6	186.8	**BG80Z-../DHE09XA4C**	219	26000	-
2.2	7.0	3000	1.4	207.4	**BG80Z-../DHE09XA4C**	219	26000	-
2.2	6.4	3000	1.55	227.2	**BG80G40-../DHE09XA4C**	231	26000	-
2.2	5.8	3300	1.4	252.3	**BG80G40-../DHE09XA4C**	231	26000	-
2.2	5.1	3800	1.2	282.8	**BG80G40-../DHE09XA4C**	231	26000	-
2.2	4.6	4200	1.1	314.0	**BG80G40-../DHE09XA4C**	231	26000	-
2.2	4.0	4900	0.94	360.0	**BG80G40-../DHE09XA4C**	231	26000	-
2.2	3.7	5300	0.87	399.8	**BG80G40-../DHE09XA4C**	231	26000	-
2.2	8.1	2550	3.3	178.5	**BG90Z-../DHE09XA4C**	329	65000	-
2.2	7.0	3000	2.8	208.3	**BG90Z-../DHE09XA4C**	329	65000	-
2.2	6.4	3250	2.6	228.1	**BG90Z-../DHE09XA4C**	329	65000	-
2.2	5.5	3350	2.7	262.5	**BG90G50-../DHE09XA4C**	340	65000	-
2.2	4.9	4000	2.3	298.8	**BG90G50-../DHE09XA4C**	340	65000	-
2.2	4.0	4750	1.95	360.3	**BG90G50-../DHE09XA4C**	340	65000	-
2.2	3.4	5700	1.6	435.8	**BG90G50-../DHE09XA4C**	340	65000	-
2.2	2.9	6700	1.35	504.7	**BG90G50-../DHE09XA4C**	340	65000	-
2.2	2.5	7800	1.2	588.8	**BG90G50-../DHE09XA4C**	340	65000	-
2.2	2.3	8500	1.1	644.7	**BG90G50-../DHE09XA4C**	340	65000	-
2.2	2.1	9300	0.99	714.2	**BG90G50-../DHE09XA4C**	340	65000	-
2.2	3.2	6500	2.8	456.7	**BG100Z-../DHE09XA4C**	528	90000	-
2.2	2.9	7200	2.6	508.5	**BG100Z-../DHE09XA4C**	528	90000	-
2.2	2.5	8400	2.2	591.1	**BG100Z-../DHE09XA4C**	528	90000	-
2.2	2.2	9500	1.95	658.1	**BG100Z-../DHE09XA4C**	528	90000	-
2.2	1.9	11000	1.7	759.0	**BG100Z-../DHE09XA4C**	528	90000	-

The torques marked (*) are maximum permissible torques for service factor f_B=1,0.

2.2 kW

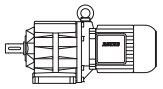

P_N	50 Hz			i	Type	m	F_{RN}	F_{RV}
	n_2	M_2	f_B					
[kW]	[1/min]	[Nm]	[—]	[:1]		[kg]	[N]	[N]
2.2	1.8	11600	1.6	845.1	**BG100Z-../DHE09XA4C**	528	90000	-
2.2	1.5	12400	1.5	976.1	**BG100G50-../DHE09XA4C**	527	90000	-
2.2	1.4	13600	1.35	1043	**BG100G50-../DHE09XA4C**	527	90000	-
2.2	1.2	15900	1.15	1204	**BG100G50-../DHE09XA4C**	527	90000	-
2.2	1.0	19600	0.94	1444	**BG100G50-../DHE09XA4C**	527	90000	-

3 kW

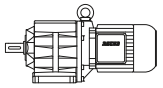

P_N	50 Hz			i	Type	m	F_{RN}	F_{RV}
	n_2	M_2	f_B					
[kW]	[1/min]	[Nm]	[—]	[:1]		[kg]	[N]	[N]
3	540	53	2.4	2.67	**BG30-../DHE11MA4**	46	1450	-
3	425	67	2.1	3.40	**BG30-../DHE11MA4**	46	1580	-
3	345	83	2.1	4.21	**BG30-../DHE11MA4**	46	1630	-
3	265	108	1.85	5.44	**BG30-../DHE11MA4**	46	1670	-
3	215	133	1.7	6.76	**BG30-../DHE11MA4**	46	2550	-
3	192	149	1.55	7.50	**BG30-../DHE11MA4**	46	2750	-
3	183	156	1.4	7.91	**BG30-../DHE11MA4**	46	1760	-
3	168	170	1.45	8.60	**BG30-../DHE11MA4**	46	2800	-
3	151	189	1.35	9.55	**BG30-../DHE11MA4**	46	3000	-
3	136	210	1.25	10.65	**BG30-../DHE11MA4**	46	2950	-
3	122	230	1.2	11.82	**BG30-../DHE11MA4**	46	3200	-
3	105	270	1.1	13.77	**BG30-../DHE11MA4**	46	3150	-
3	95	300	1.0	15.27	**BG30-../DHE11MA4**	46	3450	-
3	85	335	0.9	17.06	**BG30-../DHE11MA4**	46	3700	-
3	77	370	0.81	18.93	**BG30-../DHE11MA4**	46	4100	-
3	365	78	3.1	3.97	**BG40-../DHE11MA4**	65	2400	-
3	295	97	2.8	4.94	**BG40-../DHE11MA4**	65	2450	-
3	230	124	2.4	6.29	**BG40-../DHE11MA4**	65	2600	-
3	225	127	2.5	6.40	**BG40-../DHE11MA4**	65	3750	-
3	205	139	2.3	7.11	**BG40-../DHE11MA4**	65	3950	-
3	189	151	1.95	7.62	**BG40-../DHE11MA4**	65	2650	-
3	174	164	2.1	8.31	**BG40-../DHE11MA4**	65	4100	-
3	157	182	1.95	9.23	**BG40-../DHE11MA4**	65	4350	-
3	140	200	1.9	10.35	**BG40-../DHE11MA4**	65	4350	-
3	126	225	1.75	11.49	**BG40-../DHE11MA4**	65	4600	-
3	112	255	1.6	12.86	**BG40-../DHE11MA4**	65	4500	-
3	101	280	1.5	14.28	**BG40-../DHE11MA4**	65	4900	-
3	88	325	1.3	16.39	**BG40-../DHE11MA4**	65	5300	-
3	80	355	1.2	18.19	**BG40-../DHE11MA4**	65	5600	-
3	73	390	1.1	19.84	**BG40-../DHE11MA4**	65	5800	-
3	66	430	0.99	22.02	**BG40-../DHE11MA4**	65	6000	-
3	62	460	0.92	23.43	**BG40-../DHE11MA4**	65	6200	-
3	56	510	0.83	26.01	**BG40-../DHE11MA4**	65	6500	-
3	166	172	3.0	8.70	**BG50-../DHE11MA4**	75	5300	-
3	150	191	2.7	9.65	**BG50-../DHE11MA4**	75	5600	-
3	120	235	2.5	12.06	**BG50-../DHE11MA4**	75	5700	-
3	108	265	2.2	13.36	**BG50-../DHE11MA4**	75	6100	-
3	88	325	1.95	16.53	**BG50-../DHE11MA4**	75	6500	-
3	79	360	1.75	18.33	**BG50-../DHE11MA4**	75	7200	-
3	66	430	1.45	21.96	**BG50-../DHE11MA4**	75	8000	-
3	60	475	1.35	24.34	**BG50-../DHE11MA4**	75	8700	-
3	49	580	1.1	29.62	**BG50-../DHE11MA4**	75	8000	-
3	44	650	0.97	32.84	**BG50-../DHE11MA4**	75	8700	-
3	38.5	740	0.85	37.89	**BG50-../DHE11MA4**	75	10000	-
3	78	365	3.1	18.62	**BG60-../DHE11MA4**	107	12400	-
3	65	440	2.7	22.40	**BG60-../DHE11MA4**	107	13300	-
3	59	485	2.5	24.82	**BG60-../DHE11MA4**	107	13800	-
3	49.5	570	2.1	29.31	**BG60-../DHE11MA4**	107	14800	-
3	44.5	640	1.9	32.48	**BG60-../DHE11MA4**	107	15400	-
3	37.5	760	1.6	38.85	**BG60-../DHE11MA4**	107	16000	-
3	33.5	850	1.4	43.05	**BG60-../DHE11MA4**	107	16000	-
3	29	980	1.2	50.31	**BG60-../DHE11MA4**	107	16000	-
3	26	1100	1.1	55.76	**BG60-../DHE11MA4**	107	16000	-

The torques marked (*) are maximum permissible torques for service factor f_B=1,0.

3 kW

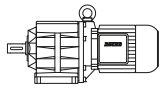

P_N	50 Hz			i	Type	m	F_{RN}	F_{RV}
	n_2	M_2	f_B					
[kW]	[1/min]	[Nm]	[—]	[:1]		[kg]	[N]	[N]
3	24	1190	1.0	60.90	**BG60-../DHE11MA4**	107	16000	-
3	21.5	1330	0.9	67.49	**BG60-../DHE11MA4**	107	16000	-
3	19.5	1460	0.82	75.71	**BG60Z-../DHE11MA4**	123	16000	-
3	41	690	3.3	35.24	**BG70-../DHE11MA4**	138	18300	-
3	37	770	3.0	39.22	**BG70-../DHE11MA4**	138	19100	-
3	31	920	2.5	46.54	**BG70-../DHE11MA4**	138	20000	-
3	29	980	2.3	50.40	**BG70-../DHE11MA4**	138	20000	-
3	24.5	1160	2.0	59.82	**BG70-../DHE11MA4**	138	20000	-
3	22.5	1270	1.8	64.85	**BG70Z-../DHE11MA4**	164	20000	-
3	20	1430	1.6	73.82	**BG70Z-../DHE11MA4**	164	20000	-
3	16.5	1730	1.35	87.61	**BG70Z-../DHE11MA4**	164	20000	-
3	15.5	1840	1.25	95.74	**BG70Z-../DHE11MA4**	164	20000	-
3	13	2200	1.05	113.6	**BG70Z-../DHE11MA4**	164	20000	-
3	12	2350	0.98	124.0	**BG70Z-../DHE11MA4**	164	20000	-
3	22	1300	3.2	66.40	**BG80Z-../DHE11MA4**	234	26000	-
3	20	1430	2.9	73.73	**BG80Z-../DHE11MA4**	234	26000	-
3	17.5	1630	2.6	84.55	**BG80Z-../DHE11MA4**	234	26000	-
3	15.5	1840	2.3	93.89	**BG80Z-../DHE11MA4**	234	26000	-
3	13	2200	1.9	112.4	**BG80Z-../DHE11MA4**	234	26000	-
3	12	2350	1.8	124.8	**BG80Z-../DHE11MA4**	234	26000	-
3	10	2850	1.45	145.4	**BG80Z-../DHE11MA4**	234	26000	-
3	9.0	3150	1.35	161.5	**BG80Z-../DHE11MA4**	234	26000	-
3	7.8	3650	1.15	186.8	**BG80Z-../DHE11MA4**	234	26000	-
3	7.0	4050	1.05	207.4	**BG80Z-../DHE11MA4**	234	26000	-
3	6.4	4150	1.1	227.2	**BG80G40-../DHE11MA4**	242	26000	-
3	5.8	4600	1.0	252.3	**BG80G40-../DHE11MA4**	242	26000	-
3	5.1	5300	0.87	282.8	**BG80G40-../DHE11MA4**	242	26000	-
3	10.5	2700	3.1	139.2	**BG90Z-../DHE11MA4**	336	65000	-
3	8.9	3200	2.6	163.0	**BG90Z-../DHE11MA4**	336	65000	-
3	8.1	3500	2.4	178.5	**BG90Z-../DHE11MA4**	336	65000	-
3	7.0	4050	2.1	208.3	**BG90Z-../DHE11MA4**	336	65000	-
3	6.4	4450	1.9	228.1	**BG90Z-../DHE11MA4**	336	65000	-
3	5.5	4750	1.95	262.5	**BG90G50-../DHE11MA4**	353	65000	-
3	4.9	5500	1.65	298.8	**BG90G50-../DHE11MA4**	353	65000	-
3	4.0	6600	1.4	360.3	**BG90G50-../DHE11MA4**	353	65000	-
3	3.4	8000	1.15	435.8	**BG90G50-../DHE11MA4**	353	65000	-
3	2.9	9300	0.99	504.7	**BG90G50-../DHE11MA4**	353	65000	-
3	2.5	10800	0.85	588.8	**BG90G50-../DHE11MA4**	353	65000	-
3	5.6	5100	3.3	259.0	**BG100-../DHE11MA4**	453	90000	-
3	4.8	5900	3.1	300.4	**BG100Z-../DHE11MA4**	543	90000	-
3	4.2	6800	2.7	343.6	**BG100Z-../DHE11MA4**	543	90000	-
3	3.8	7500	2.5	382.6	**BG100Z-../DHE11MA4**	543	90000	-
3	3.2	8900	2.1	456.7	**BG100Z-../DHE11MA4**	543	90000	-
3	2.9	9800	1.9	508.5	**BG100Z-../DHE11MA4**	543	90000	-
3	2.5	11400	1.6	591.1	**BG100Z-../DHE11MA4**	543	90000	-
3	2.2	13000	1.4	658.1	**BG100Z-../DHE11MA4**	543	90000	-
3	1.9	15000	1.25	759.0	**BG100Z-../DHE11MA4**	543	90000	-
3	1.8	15900	1.15	845.1	**BG100Z-../DHE11MA4**	543	90000	-
3	1.5	17500	1.05	976.1	**BG100G50-../DHE11MA4**	540	90000	-
3	1.4	19000	0.97	1043	**BG100G50-../DHE11MA4**	540	90000	-
3	1.2	22200	0.83	1204	**BG100G50-../DHE11MA4**	540	90000	-

4 kW

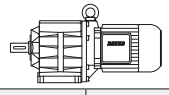

P_N	50 Hz			i	Type	m	F_{RN}	F_{RV}
	n_2	M_2	f_B					
[kW]	[1/min]	[Nm]	[—]	[:1]		[kg]	[N]	[N]
4	540	70	1.85	2.67	**BG30-../DHE11LA4**	58	1450	-
4	425	89	1.55	3.40	**BG30-../DHE11LA4**	58	1580	-
4	345	110	1.55	4.21	**BG30-../DHE11LA4**	58	1630	-
4	265	144	1.4	5.44	**BG30-../DHE11LA4**	58	1670	-
4	215	177	1.3	6.76	**BG30-../DHE11LA4**	58	2550	-
4	192	198	1.15	7.50	**BG30-../DHE11LA4**	58	2750	-

The torques marked (*) are maximum permissible torques for service factor f_B=1,0.

4 kW

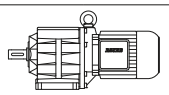

P_N	50 Hz			i	Type	m	F_{RN}	F_{RV}
	n_2	M_2	f_B					
[kW]	[1/min]	[Nm]	[—]	[:1]		[kg]	[N]	[N]
4	183	205	1.05	7.91	**BG30-../DHE11LA4**	58	1760	-
4	168	225	1.1	8.60	**BG30-../DHE11LA4**	58	2800	-
4	151	250	1.0	9.55	**BG30-../DHE11LA4**	58	3000	-
4	136	280	0.95	10.65	**BG30-../DHE11LA4**	58	2950	-
4	122	310	0.88	11.82	**BG30-../DHE11LA4**	58	3200	-
4	105	360	0.82	13.77	**BG30-../DHE11LA4**	58	3150	-
4	590	64	3.2	2.46	**BG40-../DHE11LA4**	77	2150	-
4	455	83	2.7	3.19	**BG40-../DHE11LA4**	77	2350	-
4	365	104	2.3	3.97	**BG40-../DHE11LA4**	77	2400	-
4	295	129	2.1	4.94	**BG40-../DHE11LA4**	77	2450	-
4	230	166	1.8	6.29	**BG40-../DHE11LA4**	77	2600	-
4	225	169	1.85	6.40	**BG40-../DHE11LA4**	77	3750	-
4	205	186	1.75	7.11	**BG40-../DHE11LA4**	77	3950	-
4	189	200	1.5	7.62	**BG40-../DHE11LA4**	77	2650	-
4	174	215	1.6	8.31	**BG40-../DHE11LA4**	77	4100	-
4	157	240	1.5	9.23	**BG40-../DHE11LA4**	77	4350	-
4	140	270	1.4	10.35	**BG40-../DHE11LA4**	77	4350	-
4	126	300	1.3	11.49	**BG40-../DHE11LA4**	77	4600	-
4	112	340	1.2	12.86	**BG40-../DHE11LA4**	77	4500	-
4	101	375	1.1	14.28	**BG40-../DHE11LA4**	77	4900	-
4	88	430	0.99	16.39	**BG40-../DHE11LA4**	77	5300	-
4	80	475	0.89	18.19	**BG40-../DHE11LA4**	77	5600	-
4	73	520	0.82	19.84	**BG40-../DHE11LA4**	77	5800	-
4	295	129	3.1	4.91	**BG50-../DHE11LA4**	86	3500	-
4	240	159	2.8	6.07	**BG50-../DHE11LA4**	86	4700	-
4	215	177	2.5	6.74	**BG50-../DHE11LA4**	86	3750	-
4	166	230	2.2	8.70	**BG50-../DHE11LA4**	86	5300	-
4	150	250	2.1	9.65	**BG50-../DHE11LA4**	86	5600	-
4	120	315	1.85	12.06	**BG50-../DHE11LA4**	86	5700	-
4	108	350	1.7	13.36	**BG50-../DHE11LA4**	86	6100	-
4	88	430	1.45	16.53	**BG50-../DHE11LA4**	86	6500	-
4	79	480	1.3	18.33	**BG50-../DHE11LA4**	86	7200	-
4	66	570	1.1	21.96	**BG50-../DHE11LA4**	86	8000	-
4	60	630	1.0	24.34	**BG50-../DHE11LA4**	86	8700	-
4	49	770	0.82	29.62	**BG50-../DHE11LA4**	86	8000	-
4	119	320	3.1	12.16	**BG60-../DHE11LA4**	119	10800	-
4	107	355	2.9	13.47	**BG60-../DHE11LA4**	119	11200	-
4	86	440	2.5	16.80	**BG60-../DHE11LA4**	119	12000	-
4	78	485	2.4	18.62	**BG60-../DHE11LA4**	119	12400	-
4	65	580	2.1	22.40	**BG60-../DHE11LA4**	119	13300	-
4	59	640	1.9	24.82	**BG60-../DHE11LA4**	119	13800	-
4	49.5	770	1.55	29.31	**BG60-../DHE11LA4**	119	14800	-
4	44.5	850	1.4	32.48	**BG60-../DHE11LA4**	119	15400	-
4	37.5	1010	1.2	38.85	**BG60-../DHE11LA4**	119	16000	-
4	33.5	1140	1.05	43.05	**BG60-../DHE11LA4**	119	16000	-
4	29	1310	0.92	50.31	**BG60-../DHE11LA4**	119	16000	-
4	26	1460	0.82	55.76	**BG60-../DHE11LA4**	119	16000	-
4	53	720	3.2	27.21	**BG70-../DHE11LA4**	149	16400	-
4	49	770	3.0	29.69	**BG70-../DHE11LA4**	149	16900	-
4	41	930	2.5	35.24	**BG70-../DHE11LA4**	149	18300	-
4	37	1030	2.2	39.22	**BG70-../DHE11LA4**	149	19100	-
4	31	1230	1.85	46.54	**BG70-../DHE11LA4**	149	20000	-
4	29	1310	1.75	50.40	**BG70-../DHE11LA4**	149	20000	-
4	24.5	1550	1.5	59.82	**BG70-../DHE11LA4**	149	20000	-
4	22.5	1690	1.35	64.85	**BG70Z-../DHE11LA4**	176	20000	-
4	20	1910	1.2	73.82	**BG70Z-../DHE11LA4**	176	20000	-
4	16.5	2300	1.0	87.61	**BG70Z-../DHE11LA4**	176	20000	-
4	15.5	2450	0.94	95.74	**BG70Z-../DHE11LA4**	176	20000	-
4	30	1270	3.3	48.80	**BG80-../DHE11LA4**	204	23800	-
4	25.5	1490	2.8	57.24	**BG80-../DHE11LA4**	204	25400	-
4	23	1660	2.5	63.56	**BG80-../DHE11LA4**	204	26000	-
4	22	1730	2.4	66.40	**BG80Z-../DHE11LA4**	246	26000	-
4	20	1910	2.2	73.73	**BG80Z-../DHE11LA4**	246	26000	-
4	17.5	2150	1.95	84.55	**BG80Z-../DHE11LA4**	246	26000	-
4	15.5	2450	1.7	93.89	**BG80Z-../DHE11LA4**	246	26000	-

The torques marked (*) are maximum permissible torques for service factor f_B=1,0.

4 kW

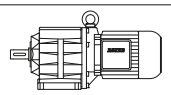

P_N	50 Hz			i	Type	m	F_{RN}	F_{RV}
	n_2	M_2	f_B					
[kW]	[1/min]	[Nm]	[—]	[:1]		[kg]	[N]	[N]
4	13	2900	1.45	112.4	**BG80Z-../DHE11LA4**	246	26000	-
4	12	3150	1.35	124.8	**BG80Z-../DHE11LA4**	246	26000	-
4	10	3800	1.1	145.4	**BG80Z-../DHE11LA4**	246	26000	-
4	9.0	4200	1.0	161.5	**BG80Z-../DHE11LA4**	246	26000	-
4	7.8	4850	0.87	186.8	**BG80Z-../DHE11LA4**	246	26000	-
4	6.4	5600	0.82	227.2	**BG80G40-../DHE11LA4**	254	26000	-
4	14	2700	3.1	105.7	**BG90Z-../DHE11LA4**	348	65000	-
4	11.5	3300	2.5	127.1	**BG90Z-../DHE11LA4**	348	65000	-
4	10.5	3600	2.3	139.2	**BG90Z-../DHE11LA4**	348	65000	-
4	8.9	4250	2.0	163.0	**BG90Z-../DHE11LA4**	348	65000	-
4	8.1	4700	1.8	178.5	**BG90Z-../DHE11LA4**	348	65000	-
4	7.0	5400	1.55	208.3	**BG90Z-../DHE11LA4**	348	65000	-
4	6.4	5900	1.4	228.1	**BG90Z-../DHE11LA4**	348	65000	-
4	5.5	6500	1.4	262.5	**BG90G50-../DHE11LA4**	365	65000	-
4	4.9	7500	1.25	298.8	**BG90G50-../DHE11LA4**	365	65000	-
4	4.0	9000	1.0	360.3	**BG90G50-../DHE11LA4**	365	65000	-
4	3.4	10800	0.85	435.8	**BG90G50-../DHE11LA4**	365	65000	-
4	7.3	5200	3.2	198.8	**BG100-../DHE11LA4**	465	90000	-
4	6.2	6100	2.8	232.6	**BG100-../DHE11LA4**	465	90000	-
4	5.6	6800	2.5	259.0	**BG100-../DHE11LA4**	465	90000	-
4	5.4	7000	2.6	269.8	**BG100Z-../DHE11LA4**	555	90000	-
4	4.8	7900	2.3	300.4	**BG100Z-../DHE11LA4**	555	90000	-
4	4.2	9000	2.1	343.6	**BG100Z-../DHE11LA4**	555	90000	-
4	3.8	10000	1.85	382.6	**BG100Z-../DHE11LA4**	555	90000	-
4	3.2	11900	1.55	456.7	**BG100Z-../DHE11LA4**	555	90000	-
4	2.9	13100	1.4	508.5	**BG100Z-../DHE11LA4**	555	90000	-
4	2.5	15200	1.2	591.1	**BG100Z-../DHE11LA4**	555	90000	-
4	2.2	17300	1.05	658.1	**BG100Z-../DHE11LA4**	555	90000	-
4	1.9	20100	0.92	759.0	**BG100Z-../DHE11LA4**	555	90000	-
4	1.8	21200	0.87	845.1	**BG100Z-../DHE11LA4**	555	90000	-

5.5 kW

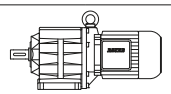

P_N	50 Hz			i	Type	m	F_{RN}	F_{RV}
	n_2	M_2	f_B					
[kW]	[1/min]	[Nm]	[—]	[:1]		[kg]	[N]	[N]
5.5	550	95	1.35	2.67	**BG30-../DHE11LA4C**	62	1450	-
5.5	430	122	1.15	3.40	**BG30-../DHE11LA4C**	62	1580	-
5.5	350	150	1.15	4.21	**BG30-../DHE11LA4C**	62	1630	-
5.5	270	194	1.05	5.44	**BG30-../DHE11LA4C**	62	1670	-
5.5	220	235	0.96	6.76	**BG30-../DHE11LA4C**	62	2550	-
5.5	195	265	0.87	7.50	**BG30-../DHE11LA4C**	62	2750	-
5.5	170	305	0.81	8.60	**BG30-../DHE11LA4C**	62	2800	-
5.5	600	87	2.3	2.46	**BG40-../DHE11LA4C**	81	2150	-
5.5	460	114	1.95	3.19	**BG40-../DHE11LA4C**	81	2350	-
5.5	370	141	1.75	3.97	**BG40-../DHE11LA4C**	81	2400	-
5.5	300	175	1.55	4.94	**BG40-../DHE11LA4C**	81	2450	-
5.5	235	220	1.35	6.29	**BG40-../DHE11LA4C**	81	2600	-
5.5	230	225	1.4	6.40	**BG40-../DHE11LA4C**	81	3750	-
5.5	210	250	1.3	7.11	**BG40-../DHE11LA4C**	81	3950	-
5.5	192	270	1.1	7.62	**BG40-../DHE11LA4C**	81	2650	-
5.5	176	295	1.15	8.31	**BG40-../DHE11LA4C**	81	4100	-
5.5	163	320	0.92	9.00	**BG40-../DHE11LA4C**	81	2650	-
5.5	159	330	1.1	9.23	**BG40-../DHE11LA4C**	81	4350	-
5.5	142	365	1.05	10.35	**BG40-../DHE11LA4C**	81	4350	-
5.5	128	410	0.95	11.49	**BG40-../DHE11LA4C**	81	4600	-
5.5	114	460	0.89	12.86	**BG40-../DHE11LA4C**	81	4500	-
5.5	103	500	0.84	14.28	**BG40-../DHE11LA4C**	81	4900	-
5.5	415	126	2.8	3.55	**BG50-../DHE11LA4C**	90	3300	-
5.5	300	175	2.3	4.91	**BG50-../DHE11LA4C**	90	3500	-
5.5	245	210	2.1	6.07	**BG50-../DHE11LA4C**	90	4700	-
5.5	220	235	1.9	6.74	**BG50-../DHE11LA4C**	90	3750	-
5.5	168	310	1.65	8.70	**BG50-../DHE11LA4C**	90	5300	-

The torques marked (*) are maximum permissible torques for service factor f_B=1,0.

5.5 kW

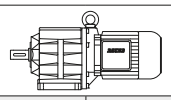

P_N	50 Hz			i	Type	m	F_{RN}	F_{RV}
	n_2	M_2	f_B					
[kW]	[1/min]	[Nm]	[—]	[:1]		[kg]	[N]	[N]
5.5	152	345	1.5	9.65	**BG50-../DHE11LA4C**	90	5600	-
5.5	122	430	1.35	12.06	**BG50-../DHE11LA4C**	90	5700	-
5.5	110	475	1.25	13.36	**BG50-../DHE11LA4C**	90	6100	-
5.5	89	590	1.05	16.53	**BG50-../DHE11LA4C**	90	6500	-
5.5	80	650	0.97	18.33	**BG50-../DHE11LA4C**	90	7200	-
5.5	67	780	0.81	21.96	**BG50-../DHE11LA4C**	90	8000	-
5.5	215	240	3.3	6.88	**BG60-../DHE11LA4C**	123	8600	-
5.5	160	325	2.7	9.13	**BG60-../DHE11LA4C**	123	9800	-
5.5	145	360	2.5	10.12	**BG60-../DHE11LA4C**	123	10200	-
5.5	121	430	2.3	12.16	**BG60-../DHE11LA4C**	123	10800	-
5.5	109	480	2.1	13.47	**BG60-../DHE11LA4C**	123	11200	-
5.5	87	600	1.85	16.80	**BG60-../DHE11LA4C**	123	12000	-
5.5	79	660	1.75	18.62	**BG60-../DHE11LA4C**	123	12400	-
5.5	66	790	1.5	22.40	**BG60-../DHE11LA4C**	123	13300	-
5.5	59	890	1.35	24.82	**BG60-../DHE11LA4C**	123	13800	-
5.5	50	1050	1.15	29.31	**BG60-../DHE11LA4C**	123	14800	-
5.5	45	1160	1.05	32.48	**BG60-../DHE11LA4C**	123	15400	-
5.5	38	1380	0.87	38.85	**BG60-../DHE11LA4C**	123	16000	-
5.5	70	750	3.1	20.98	**BG70-../DHE11LA4C**	153	14600	-
5.5	64	820	2.8	22.92	**BG70-../DHE11LA4C**	153	15100	-
5.5	54	970	2.4	27.21	**BG70-../DHE11LA4C**	153	16400	-
5.5	49.5	1060	2.2	29.69	**BG70-../DHE11LA4C**	153	16900	-
5.5	41.5	1260	1.85	35.24	**BG70-../DHE11LA4C**	153	18300	-
5.5	37.5	1400	1.65	39.22	**BG70-../DHE11LA4C**	153	19100	-
5.5	31.5	1660	1.4	46.54	**BG70-../DHE11LA4C**	153	20000	-
5.5	29	1810	1.25	50.40	**BG70-../DHE11LA4C**	153	20000	-
5.5	24.5	2100	1.1	59.82	**BG70-../DHE11LA4C**	153	20000	-
5.5	23	2250	1.0	64.85	**BG70Z-../DHE11LA4C**	180	20000	-
5.5	20	2600	0.88	73.82	**BG70Z-../DHE11LA4C**	180	20000	-
5.5	38.5	1360	3.1	38.00	**BG80-../DHE11LA4C**	208	21300	-
5.5	33.5	1560	2.7	43.94	**BG80-../DHE11LA4C**	208	22600	-
5.5	30	1750	2.4	48.80	**BG80-../DHE11LA4C**	208	23800	-
5.5	26	2000	2.1	57.24	**BG80-../DHE11LA4C**	208	25400	-
5.5	23	2250	1.85	63.56	**BG80-../DHE11LA4C**	208	26000	-
5.5	22	2350	1.8	66.40	**BG80Z-../DHE11LA4C**	250	26000	-
5.5	20	2600	1.6	73.73	**BG80Z-../DHE11LA4C**	250	26000	-
5.5	17.5	3000	1.4	84.55	**BG80Z-../DHE11LA4C**	250	26000	-
5.5	16	3250	1.3	93.89	**BG80Z-../DHE11LA4C**	250	26000	-
5.5	13	4000	1.05	112.4	**BG80Z-../DHE11LA4C**	250	26000	-
5.5	12	4350	0.97	124.8	**BG80Z-../DHE11LA4C**	250	26000	-
5.5	10.5	5000	0.84	145.4	**BG80Z-../DHE11LA4C**	250	26000	-
5.5	19.5	2650	3.2	76.61	**BG90Z-../DHE11LA4C**	352	65000	-
5.5	17.5	3000	2.8	83.91	**BG90Z-../DHE11LA4C**	352	65000	-
5.5	15.5	3350	2.5	96.53	**BG90Z-../DHE11LA4C**	352	65000	-
5.5	14	3750	2.2	105.7	**BG90Z-../DHE11LA4C**	352	65000	-
5.5	11.5	4550	1.85	127.1	**BG90Z-../DHE11LA4C**	352	65000	-
5.5	10.5	5000	1.7	139.2	**BG90Z-../DHE11LA4C**	352	65000	-
5.5	9.0	5800	1.45	163.0	**BG90Z-../DHE11LA4C**	352	65000	-
5.5	8.2	6400	1.3	178.5	**BG90Z-../DHE11LA4C**	352	65000	-
5.5	7.1	7300	1.15	208.3	**BG90Z-../DHE11LA4C**	352	65000	-
5.5	6.5	8000	1.05	228.1	**BG90Z-../DHE11LA4C**	352	65000	-
5.5	5.6	8900	1.05	262.5	**BG90G50-../DHE11LA4C**	369	65000	-
5.5	4.9	10400	0.88	298.8	**BG90G50-../DHE11LA4C**	369	65000	-
5.5	9.5	5500	3.1	154.8	**BG100-../DHE11LA4C**	469	90000	-
5.5	8.2	6400	2.6	178.6	**BG100-../DHE11LA4C**	469	90000	-
5.5	7.4	7000	2.4	198.8	**BG100-../DHE11LA4C**	469	90000	-
5.5	6.3	8300	2.0	232.6	**BG100-../DHE11LA4C**	469	90000	-
5.5	5.7	9200	1.85	259.0	**BG100-../DHE11LA4C**	469	90000	-
5.5	5.5	9500	1.95	269.8	**BG100Z-../DHE11LA4C**	559	90000	-
5.5	4.9	10700	1.75	300.4	**BG100Z-../DHE11LA4C**	559	90000	-
5.5	4.3	12200	1.5	343.6	**BG100Z-../DHE11LA4C**	559	90000	-
5.5	3.9	13400	1.4	382.6	**BG100Z-../DHE11LA4C**	559	90000	-
5.5	3.2	16400	1.15	456.7	**BG100Z-../DHE11LA4C**	559	90000	-
5.5	2.9	18100	1.0	508.5	**BG100Z-../DHE11LA4C**	559	90000	-
5.5	2.5	21000	0.88	591.1	**BG100Z-../DHE11LA4C**	559	90000	-

The torques marked (*) are maximum permissible torques for service factor f_B=1,0.

5.5 kW

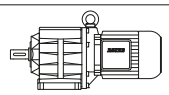

P_N	50 Hz			i	Type	m	F_{RN}	F_{RV}
	n_2	M_2	f_B					
[kW]	[1/min]	[Nm]	[—]	[:1]		[kg]	[N]	[N]
5.5	2.3	22800	0.81	658.1	**BG100Z-../DHE11LA4C**	559	90000	-

7.5 kW

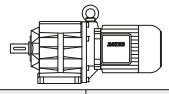

P_N	50 Hz			i	Type	m	F_{RN}	F_{RV}
	n_2	M_2	f_B					
[kW]	[1/min]	[Nm]	[—]	[:1]		[kg]	[N]	[N]
7.5	600	119	2.6	2.47	**BG50-../DHE13LA4**	101	2900	-
7.5	415	172	2.0	3.55	**BG50-../DHE13LA4**	101	3300	-
7.5	300	235	1.7	4.91	**BG50-../DHE13LA4**	101	3500	-
7.5	245	290	1.55	6.07	**BG50-../DHE13LA4**	101	4700	-
7.5	220	325	1.4	6.74	**BG50-../DHE13LA4**	101	3750	-
7.5	168	425	1.2	8.70	**BG50-../DHE13LA4**	101	5300	-
7.5	152	470	1.1	9.65	**BG50-../DHE13LA4**	101	5600	-
7.5	122	580	0.99	12.06	**BG50-../DHE13LA4**	101	5700	-
7.5	110	650	0.91	13.36	**BG50-../DHE13LA4**	101	6100	-
7.5	295	240	2.9	4.98	**BG60-../DHE13LA4**	135	7800	-
7.5	240	295	2.6	6.16	**BG60-../DHE13LA4**	135	8500	-
7.5	215	330	2.4	6.88	**BG60-../DHE13LA4**	135	8600	-
7.5	160	445	2.0	9.13	**BG60-../DHE13LA4**	135	9800	-
7.5	145	490	1.85	10.12	**BG60-../DHE13LA4**	135	10200	-
7.5	121	590	1.7	12.16	**BG60-../DHE13LA4**	135	10800	-
7.5	109	650	1.55	13.47	**BG60-../DHE13LA4**	135	11200	-
7.5	87	820	1.35	16.80	**BG60-../DHE13LA4**	135	12000	-
7.5	79	900	1.25	18.62	**BG60-../DHE13LA4**	135	12400	-
7.5	66	1080	1.1	22.40	**BG60-../DHE13LA4**	135	13300	-
7.5	59	1210	0.99	24.82	**BG60-../DHE13LA4**	135	13800	-
7.5	50	1430	0.84	29.31	**BG60-../DHE13LA4**	135	14800	-
7.5	95	750	3.1	15.53	**BG70-../DHE13LA4**	165	12700	-
7.5	83	860	2.7	17.68	**BG70-../DHE13LA4**	165	13400	-
7.5	70	1020	2.3	20.98	**BG70-../DHE13LA4**	165	14600	-
7.5	64	1110	2.1	22.92	**BG70-../DHE13LA4**	165	15100	-
7.5	54	1320	1.75	27.21	**BG70-../DHE13LA4**	165	16400	-
7.5	49.5	1440	1.6	29.69	**BG70-../DHE13LA4**	165	16900	-
7.5	41.5	1720	1.35	35.24	**BG70-../DHE13LA4**	165	18300	-
7.5	37.5	1910	1.2	39.22	**BG70-../DHE13LA4**	165	19100	-
7.5	31.5	2250	1.0	46.54	**BG70-../DHE13LA4**	165	20000	-
7.5	29	2450	0.94	50.40	**BG70-../DHE13LA4**	165	20000	-
7.5	56	1270	3.3	26.44	**BG80-../DHE13LA4**	219	17900	-
7.5	50	1430	2.9	29.36	**BG80-../DHE13LA4**	219	18900	-
7.5	43	1660	2.5	34.22	**BG80-../DHE13LA4**	219	20200	-
7.5	38.5	1860	2.3	38.00	**BG80-../DHE13LA4**	219	21300	-
7.5	33.5	2100	2.0	43.94	**BG80-../DHE13LA4**	219	22600	-
7.5	30	2350	1.8	48.80	**BG80-../DHE13LA4**	219	23800	-
7.5	26	2750	1.55	57.24	**BG80-../DHE13LA4**	219	25400	-
7.5	23	3100	1.35	63.56	**BG80-../DHE13LA4**	219	26000	-
7.5	22	3250	1.3	66.40	**BG80Z-../DHE13LA4**	262	26000	-
7.5	20	3550	1.2	73.73	**BG80Z-../DHE13LA4**	262	26000	-
7.5	17.5	4050	1.05	84.55	**BG80Z-../DHE13LA4**	262	26000	-
7.5	16	4450	0.94	93.89	**BG80Z-../DHE13LA4**	262	26000	-
7.5	27.5	2600	3.2	53.46	**BG90-../DHE13LA4**	308	65000	-
7.5	26	2750	2.5	57.04	**BG90Z-../DHE13LA4**	364	65000	-
7.5	23.5	3000	2.5	62.47	**BG90Z-../DHE13LA4**	364	65000	-
7.5	19.5	3650	2.3	76.61	**BG90Z-../DHE13LA4**	364	65000	-
7.5	17.5	4050	2.1	83.91	**BG90Z-../DHE13LA4**	364	65000	-
7.5	15.5	4600	1.85	96.53	**BG90Z-../DHE13LA4**	364	65000	-
7.5	14	5100	1.65	105.7	**BG90Z-../DHE13LA4**	364	65000	-
7.5	11.5	6200	1.35	127.1	**BG90Z-../DHE13LA4**	364	65000	-
7.5	10.5	6800	1.25	139.2	**BG90Z-../DHE13LA4**	364	65000	-
7.5	9.0	7900	1.05	163.0	**BG90Z-../DHE13LA4**	364	65000	-
7.5	8.2	8700	0.97	178.5	**BG90Z-../DHE13LA4**	364	65000	-
7.5	7.1	10000	0.84	208.3	**BG90Z-../DHE13LA4**	364	65000	-
7.5	6.7	10300	0.89	219.9	**BG90G50-../DHE13LA4**	380	65000	-

The torques marked (*) are maximum permissible torques for service factor f_B=1,0.

7.5 kW

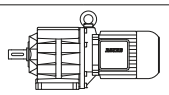

P_N	50 Hz			i	Type	m	F_{RN}	F_{RV}
	n_2	M_2	f_B					
[kW]	[1/min]	[Nm]	[—]	[:1]		[kg]	[N]	[N]
7.5	14	5100	3.3	107.5	**BG100-../DHE13LA4**	480	90000	-
7.5	12.5	5700	2.9	119.7	**BG100-../DHE13LA4**	480	90000	-
7.5	10.5	6800	2.5	139.1	**BG100-../DHE13LA4**	480	90000	-
7.5	9.5	7500	2.2	154.8	**BG100-../DHE13LA4**	480	90000	-
7.5	8.2	8700	1.95	178.6	**BG100-../DHE13LA4**	480	90000	-
7.5	7.4	9600	1.75	198.8	**BG100-../DHE13LA4**	480	90000	-
7.5	6.3	11300	1.5	232.6	**BG100-../DHE13LA4**	480	90000	-
7.5	5.7	12500	1.35	259.0	**BG100-../DHE13LA4**	480	90000	-
7.5	5.5	13000	1.4	269.8	**BG100Z-../DHE13LA4**	571	90000	-
7.5	4.9	14600	1.25	300.4	**BG100Z-../DHE13LA4**	571	90000	-
7.5	4.3	16600	1.1	343.6	**BG100Z-../DHE13LA4**	571	90000	-
7.5	3.9	18300	1.0	382.6	**BG100Z-../DHE13LA4**	571	90000	-
7.5	3.2	22300	0.83	456.7	**BG100Z-../DHE13LA4**	571	90000	-

9.5 kW

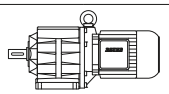

P_N	50 Hz			i	Type	m	F_{RN}	F_{RV}
	n_2	M_2	f_B					
[kW]	[1/min]	[Nm]	[—]	[:1]		[kg]	[N]	[N]
9.5	600	151	2.0	2.47	**BG50-../DHE16MB4**	125	2900	-
9.5	415	215	1.6	3.55	**BG50-../DHE16MB4**	125	3300	-
9.5	300	300	1.35	4.91	**BG50-../DHE16MB4**	125	3500	-
9.5	245	370	1.2	6.07	**BG50-../DHE16MB4**	125	4700	-
9.5	220	410	1.1	6.74	**BG50-../DHE16MB4**	125	3750	-
9.5	169	530	0.96	8.70	**BG50-../DHE16MB4**	125	5300	-
9.5	153	590	0.89	9.65	**BG50-../DHE16MB4**	125	5600	-
9.5	395	225	2.7	3.74	**BG60-../DHE16MB4**	159	7100	-
9.5	300	300	2.3	4.98	**BG60-../DHE16MB4**	159	7800	-
9.5	240	375	2.1	6.16	**BG60-../DHE16MB4**	159	8500	-
9.5	220	410	1.95	6.82	**BG60-../DHE16MB4**	159	8900	-
9.5	215	420	1.85	6.88	**BG60-../DHE16MB4**	159	8600	-
9.5	162	560	1.6	9.13	**BG60-../DHE16MB4**	159	9800	-
9.5	146	620	1.45	10.12	**BG60-../DHE16MB4**	159	10200	-
9.5	121	740	1.35	12.16	**BG60-../DHE16MB4**	159	10800	-
9.5	110	820	1.25	13.47	**BG60-../DHE16MB4**	159	11200	-
9.5	88	1030	1.1	16.80	**BG60-../DHE16MB4**	159	12000	-
9.5	79	1140	1.0	18.62	**BG60-../DHE16MB4**	159	12400	-
9.5	66	1370	0.88	22.40	**BG60-../DHE16MB4**	159	13300	-
9.5	123	730	3.2	11.97	**BG70-../DHE16MB4**	194	11200	-
9.5	113	800	2.9	13.08	**BG70-../DHE16MB4**	194	11600	-
9.5	95	950	2.4	15.53	**BG70-../DHE16MB4**	194	12700	-
9.5	84	1080	2.1	17.68	**BG70-../DHE16MB4**	194	13400	-
9.5	71	1270	1.8	20.98	**BG70-../DHE16MB4**	194	14600	-
9.5	65	1390	1.65	22.92	**BG70-../DHE16MB4**	194	15100	-
9.5	55	1640	1.4	27.21	**BG70-../DHE16MB4**	194	16400	-
9.5	50	1810	1.25	29.69	**BG70-../DHE16MB4**	194	16900	-
9.5	42	2150	1.05	35.24	**BG70-../DHE16MB4**	194	18300	-
9.5	37.5	2400	0.96	39.22	**BG70-../DHE16MB4**	194	19100	-
9.5	32	2800	0.82	46.54	**BG70-../DHE16MB4**	194	20000	-
9.5	67	1350	3.1	22.09	**BG80-../DHE16MB4**	242	16500	-
9.5	56	1620	2.6	26.44	**BG80-../DHE16MB4**	242	17900	-
9.5	51	1770	2.4	29.36	**BG80-../DHE16MB4**	242	18900	-
9.5	43	2100	2.0	34.22	**BG80-../DHE16MB4**	242	20200	-
9.5	39	2300	1.85	38.00	**BG80-../DHE16MB4**	242	21300	-
9.5	33.5	2700	1.55	43.94	**BG80-../DHE16MB4**	242	22600	-
9.5	30.5	2950	1.4	48.80	**BG80-../DHE16MB4**	242	23800	-
9.5	26	3450	1.2	57.24	**BG80-../DHE16MB4**	242	25400	-
9.5	23.5	3850	1.1	63.56	**BG80-../DHE16MB4**	242	26000	-
9.5	22.5	4000	1.05	66.40	**BG80Z-../DHE16MB4**	286	26000	-
9.5	20	4500	0.93	73.73	**BG80Z-../DHE16MB4**	286	26000	-
9.5	17.5	5100	0.82	84.55	**BG80Z-../DHE16MB4**	286	26000	-
9.5	35.5	2550	3.3	41.85	**BG90-../DHE16MB4**	333	65000	-
9.5	30.5	2950	2.8	48.82	**BG90-../DHE16MB4**	333	65000	-

The torques marked (*) are maximum permissible torques for service factor f_B=1,0.

9.5 kW

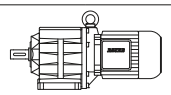

P_N	50 Hz			i	Type	m	F_{RN}	F_{RV}
	n_2	M_2	f_B					
[kW]	[1/min]	[Nm]	[—]	[:1]		[kg]	[N]	[N]
9.5	27.5	3250	2.6	53.46	**BG90-../DHE16MB4**	333	65000	-
9.5	26	3450	1.95	57.04	**BG90Z-../DHE16MB4**	392	65000	-
9.5	24	3750	2.0	62.47	**BG90Z-../DHE16MB4**	392	65000	-
9.5	19.5	4650	1.8	76.61	**BG90Z-../DHE16MB4**	392	65000	-
9.5	18	5000	1.7	83.91	**BG90Z-../DHE16MB4**	392	65000	-
9.5	15.5	5800	1.45	96.53	**BG90Z-../DHE16MB4**	392	65000	-
9.5	14	6400	1.3	105.7	**BG90Z-../DHE16MB4**	392	65000	-
9.5	12	7500	1.1	127.1	**BG90Z-../DHE16MB4**	392	65000	-
9.5	11	8200	1.0	139.2	**BG90Z-../DHE16MB4**	392	65000	-
9.5	9.1	9900	0.85	163.0	**BG90Z-../DHE16MB4**	392	65000	-
9.5	16.5	5400	3.1	90.02	**BG100-../DHE16MB4**	504	90000	-
9.5	14	6400	2.6	107.5	**BG100-../DHE16MB4**	504	90000	-
9.5	12.5	7200	2.3	119.7	**BG100-../DHE16MB4**	504	90000	-
9.5	11	8200	2.0	139.1	**BG100-../DHE16MB4**	504	90000	-
9.5	9.5	9500	1.75	154.8	**BG100-../DHE16MB4**	504	90000	-
9.5	8.3	10900	1.55	178.6	**BG100-../DHE16MB4**	504	90000	-
9.5	7.4	12200	1.4	198.8	**BG100-../DHE16MB4**	504	90000	-
9.5	6.4	14100	1.2	232.6	**BG100-../DHE16MB4**	504	90000	-
9.5	5.7	15900	1.05	259.0	**BG100-../DHE16MB4**	504	90000	-
9.5	5.5	16400	1.15	269.8	**BG100Z-../DHE16MB4**	595	90000	-
9.5	4.9	18500	1.0	300.4	**BG100Z-../DHE16MB4**	595	90000	-
9.5	4.3	21000	0.88	343.6	**BG100Z-../DHE16MB4**	595	90000	-
9.5	3.9	23200	0.8	382.6	**BG100Z-../DHE16MB4**	595	90000	-

11 kW

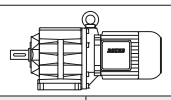

P_N	50 Hz			i	Type	m	F_{RN}	F_{RV}
	n_2	M_2	f_B					
[kW]	[1/min]	[Nm]	[—]	[:1]		[kg]	[N]	[N]
11	600	175	1.75	2.47	**BG50-../DHE16LB4**	138	2900	-
11	415	250	1.4	3.55	**BG50-../DHE16LB4**	138	3300	-
11	300	350	1.15	4.91	**BG50-../DHE16LB4**	138	3500	-
11	245	425	1.05	6.07	**BG50-../DHE16LB4**	138	4700	-
11	220	475	0.95	6.74	**BG50-../DHE16LB4**	138	3750	-
11	169	620	0.82	8.70	**BG50-../DHE16LB4**	138	5300	-
11	590	178	3.0	2.52	**BG60-../DHE16LB4**	172	6200	-
11	395	265	2.3	3.74	**BG60-../DHE16LB4**	172	7100	-
11	300	350	1.95	4.98	**BG60-../DHE16LB4**	172	7800	-
11	240	435	1.75	6.16	**BG60-../DHE16LB4**	172	8500	-
11	220	475	1.7	6.82	**BG60-../DHE16LB4**	172	8900	-
11	215	485	1.6	6.88	**BG60-../DHE16LB4**	172	8600	-
11	162	640	1.4	9.13	**BG60-../DHE16LB4**	172	9800	-
11	146	710	1.3	10.12	**BG60-../DHE16LB4**	172	10200	-
11	121	860	1.15	12.16	**BG60-../DHE16LB4**	172	10800	-
11	110	950	1.05	13.47	**BG60-../DHE16LB4**	172	11200	-
11	88	1190	0.93	16.80	**BG60-../DHE16LB4**	172	12000	-
11	79	1320	0.87	18.62	**BG60-../DHE16LB4**	172	12400	-
11	146	710	3.2	10.09	**BG70-../DHE16LB4**	206	10200	-
11	123	850	2.7	11.97	**BG70-../DHE16LB4**	206	11200	-
11	113	920	2.5	13.08	**BG70-../DHE16LB4**	206	11600	-
11	95	1100	2.1	15.53	**BG70-../DHE16LB4**	206	12700	-
11	84	1250	1.85	17.68	**BG70-../DHE16LB4**	206	13400	-
11	71	1470	1.55	20.98	**BG70-../DHE16LB4**	206	14600	-
11	65	1610	1.45	22.92	**BG70-../DHE16LB4**	206	15100	-
11	55	1910	1.2	27.21	**BG70-../DHE16LB4**	206	16400	-
11	50	2100	1.1	29.69	**BG70-../DHE16LB4**	206	16900	-
11	42	2500	0.92	35.24	**BG70-../DHE16LB4**	206	18300	-
11	37.5	2800	0.82	39.22	**BG70-../DHE16LB4**	206	19100	-
11	74	1410	3.0	19.89	**BG80-../DHE16LB4**	256	15500	-
11	67	1560	2.7	22.09	**BG80-../DHE16LB4**	256	16500	-
11	56	1870	2.2	26.44	**BG80-../DHE16LB4**	256	17900	-
11	51	2050	2.0	29.36	**BG80-../DHE16LB4**	256	18900	-
11	43	2400	1.75	34.22	**BG80-../DHE16LB4**	256	20200	-

The torques marked (*) are maximum permissible torques for service factor f_B=1,0.

11 kW

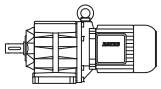

P_N	50 Hz			i	Type	m	F_{RN}	F_{RV}
	n_2	M_2	f_B					
[kW]	[1/min]	[Nm]	[—]	[:1]		[kg]	[N]	[N]
11	39	2650	1.6	38.00	**BG80-../DHE16LB4**	256	21300	-
11	33.5	3100	1.35	43.94	**BG80-../DHE16LB4**	256	22600	-
11	30.5	3400	1.25	48.80	**BG80-../DHE16LB4**	256	23800	-
11	26	4000	1.05	57.24	**BG80-../DHE16LB4**	256	25400	-
11	23.5	4450	0.94	63.56	**BG80-../DHE16LB4**	256	26000	-
11	22.5	4650	0.9	66.40	**BG80Z-../DHE16LB4**	299	26000	-
11	20	5200	0.81	73.73	**BG80Z-../DHE16LB4**	299	26000	-
11	38.5	2700	3.1	38.21	**BG90-../DHE16LB4**	346	65000	-
11	35.5	2950	2.8	41.85	**BG90-../DHE16LB4**	346	65000	-
11	30.5	3400	2.5	48.82	**BG90-../DHE16LB4**	346	65000	-
11	27.5	3800	2.2	53.46	**BG90-../DHE16LB4**	346	65000	-
11	26	4000	1.7	57.04	**BG90Z-../DHE16LB4**	405	65000	-
11	24	4350	1.7	62.47	**BG90Z-../DHE16LB4**	405	65000	-
11	19.5	5300	1.6	76.61	**BG90Z-../DHE16LB4**	405	65000	-
11	18	5800	1.45	83.91	**BG90Z-../DHE16LB4**	405	65000	-
11	15.5	6700	1.25	96.53	**BG90Z-../DHE16LB4**	405	65000	-
11	14	7500	1.1	105.7	**BG90Z-../DHE16LB4**	405	65000	-
11	12	8700	0.97	127.1	**BG90Z-../DHE16LB4**	405	65000	-
11	11	9500	0.88	139.2	**BG90Z-../DHE16LB4**	405	65000	-
11	21	5000	3.2	70.69	**BG100-../DHE16LB4**	516	90000	-
11	18.5	5600	3.0	80.85	**BG100-../DHE16LB4**	516	90000	-
11	16.5	6300	2.7	90.02	**BG100-../DHE16LB4**	516	90000	-
11	14	7500	2.2	107.5	**BG100-../DHE16LB4**	516	90000	-
11	12.5	8400	2.0	119.7	**BG100-../DHE16LB4**	516	90000	-
11	11	9500	1.75	139.1	**BG100-../DHE16LB4**	516	90000	-
11	9.5	11000	1.55	154.8	**BG100-../DHE16LB4**	516	90000	-
11	8.3	12600	1.35	178.6	**BG100-../DHE16LB4**	516	90000	-
11	7.4	14100	1.2	198.8	**BG100-../DHE16LB4**	516	90000	-
11	6.4	16400	1.0	232.6	**BG100-../DHE16LB4**	516	90000	-
11	5.7	18400	0.91	259.0	**BG100-../DHE16LB4**	516	90000	-
11	5.5	19100	0.97	269.8	**BG100Z-../DHE16LB4**	608	90000	-
11	4.9	21400	0.86	300.4	**BG100Z-../DHE16LB4**	608	90000	-

15 kW

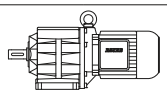

P_N	50 Hz			i	Type	m	F_{RN}	F_{RV}
	n_2	M_2	f_B					
[kW]	[1/min]	[Nm]	[—]	[:1]		[kg]	[N]	[N]
15	600	235	1.3	2.47	**BG50-../DHE16XB4**	148	2900	-
15	415	345	1.0	3.55	**BG50-../DHE16XB4**	148	3300	-
15	300	475	0.84	4.91	**BG50-../DHE16XB4**	148	3500	-
15	590	240	2.2	2.52	**BG60-../DHE16XB4**	182	6200	-
15	395	360	1.7	3.74	**BG60-../DHE16XB4**	182	7100	-
15	300	475	1.45	4.98	**BG60-../DHE16XB4**	182	7800	-
15	240	590	1.3	6.16	**BG60-../DHE16XB4**	182	8500	-
15	220	650	1.25	6.82	**BG60-../DHE16XB4**	182	8900	-
15	215	660	1.2	6.88	**BG60-../DHE16XB4**	182	8600	-
15	162	880	1.0	9.13	**BG60-../DHE16XB4**	182	9800	-
15	146	980	0.93	10.12	**BG60-../DHE16XB4**	182	10200	-
15	121	1180	0.84	12.16	**BG60-../DHE16XB4**	182	10800	-
15	210	680	3.2	7.14	**BG70-../DHE16XB4**	216	8800	-
15	174	820	2.8	8.48	**BG70-../DHE16XB4**	216	9500	-
15	146	980	2.3	10.09	**BG70-../DHE16XB4**	216	10200	-
15	123	1160	2.0	11.97	**BG70-../DHE16XB4**	216	11200	-
15	113	1260	1.85	13.08	**BG70-../DHE16XB4**	216	11600	-
15	95	1500	1.55	15.53	**BG70-../DHE16XB4**	216	12700	-
15	84	1700	1.35	17.68	**BG70-../DHE16XB4**	216	13400	-
15	71	2000	1.15	20.98	**BG70-../DHE16XB4**	216	14600	-
15	65	2200	1.05	22.92	**BG70-../DHE16XB4**	216	15100	-
15	55	2600	0.88	27.21	**BG70-../DHE16XB4**	216	16400	-
15	50	2850	0.81	29.69	**BG70-../DHE16XB4**	216	16900	-
15	95	1500	2.8	15.62	**BG80-../DHE16XB4**	266	13700	-

The torques marked (*) are maximum permissible torques for service factor f_B=1,0.

15 kW

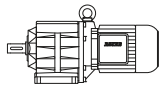

P_N	50 Hz			i	Type	m	F_{RN}	F_{RV}
	n_2	M_2	f_B					
[kW]	[1/min]	[Nm]	[—]	[:1]		[kg]	[N]	[N]
15	85	1680	2.5	17.35	**BG80-../DHE16XB4**	266	14600	-
15	74	1930	2.2	19.89	**BG80-../DHE16XB4**	266	15500	-
15	67	2100	2.0	22.09	**BG80-../DHE16XB4**	266	16500	-
15	56	2550	1.65	26.44	**BG80-../DHE16XB4**	266	17900	-
15	51	2800	1.5	29.36	**BG80-../DHE16XB4**	266	18900	-
15	43	3300	1.25	34.22	**BG80-../DHE16XB4**	266	20200	-
15	39	3650	1.15	38.00	**BG80-../DHE16XB4**	266	21300	-
15	33.5	4250	0.99	43.94	**BG80-../DHE16XB4**	266	22600	-
15	30.5	4650	0.9	48.80	**BG80-../DHE16XB4**	266	23800	-
15	49.5	2850	2.9	29.78	**BG90-../DHE16XB4**	356	65000	-
15	45.5	3100	2.7	32.62	**BG90-../DHE16XB4**	356	65000	-
15	38.5	3700	2.3	38.21	**BG90-../DHE16XB4**	356	65000	-
15	35.5	4000	2.1	41.85	**BG90-../DHE16XB4**	356	65000	-
15	30.5	4650	1.8	48.82	**BG90-../DHE16XB4**	356	65000	-
15	27.5	5200	1.6	53.46	**BG90-../DHE16XB4**	356	65000	-
15	26	5500	1.25	57.04	**BG90Z-../DHE16XB4**	415	65000	-
15	24	5900	1.25	62.47	**BG90Z-../DHE16XB4**	415	65000	-
15	19.5	7300	1.15	76.61	**BG90Z-../DHE16XB4**	415	65000	-
15	18	7900	1.05	83.91	**BG90Z-../DHE16XB4**	415	65000	-
15	15.5	9200	0.91	96.53	**BG90Z-../DHE16XB4**	415	65000	-
15	14	10200	0.82	105.7	**BG90Z-../DHE16XB4**	415	65000	-
15	32	4450	3.2	46.43	**BG100-../DHE16XB4**	526	90000	-
15	28.5	5000	2.9	51.70	**BG100-../DHE16XB4**	526	90000	-
15	23.5	6000	2.6	63.49	**BG100-../DHE16XB4**	526	90000	-
15	21	6800	2.3	70.69	**BG100-../DHE16XB4**	526	90000	-
15	18.5	7700	2.1	80.85	**BG100-../DHE16XB4**	526	90000	-
15	16.5	8600	1.95	90.02	**BG100-../DHE16XB4**	526	90000	-
15	14	10200	1.65	107.5	**BG100-../DHE16XB4**	526	90000	-
15	12.5	11400	1.45	119.7	**BG100-../DHE16XB4**	526	90000	-
15	11	13000	1.3	139.1	**BG100-../DHE16XB4**	526	90000	-
15	9.5	15000	1.1	154.8	**BG100-../DHE16XB4**	526	90000	-
15	8.3	17200	0.98	178.6	**BG100-../DHE16XB4**	526	90000	-
15	7.4	19300	0.87	198.8	**BG100-../DHE16XB4**	526	90000	-

18.5 kW

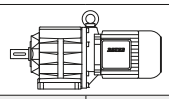

P_N	50 Hz			i	Type	m	F_{RN}	F_{RV}
	n_2	M_2	f_B					
[kW]	[1/min]	[Nm]	[—]	[:1]		[kg]	[N]	[N]
18.5	600	290	1.05	2.47	**BG50-../DHE18LB4**	200	2900	-
18.5	415	425	0.82	3.55	**BG50-../DHE18LB4**	200	3300	-
18.5	590	295	1.8	2.52	**BG60-../DHE18LB4**	229	6200	-
18.5	395	445	1.4	3.74	**BG60-../DHE18LB4**	229	7100	-
18.5	300	580	1.2	4.98	**BG60-../DHE18LB4**	229	7800	-
18.5	215	820	0.95	6.88	**BG60-../DHE18LB4**	229	8600	-
18.5	162	1090	0.81	9.13	**BG60-../DHE18LB4**	229	9800	-
18.5	300	580	2.6	4.95	**BG70-../DHE18LB4**	257	6900	-
18.5	255	690	2.5	5.87	**BG70-../DHE18LB4**	257	8200	-
18.5	210	840	2.6	7.14	**BG70-../DHE18LB4**	257	8800	-
18.5	174	1010	2.3	8.48	**BG70-../DHE18LB4**	257	9500	-
18.5	146	1210	1.9	10.09	**BG70-../DHE18LB4**	257	10200	-
18.5	123	1430	1.6	11.97	**BG70-../DHE18LB4**	257	11200	-
18.5	113	1560	1.45	13.08	**BG70-../DHE18LB4**	257	11600	-
18.5	95	1850	1.25	15.53	**BG70-../DHE18LB4**	257	12700	-
18.5	84	2100	1.1	17.68	**BG70-../DHE18LB4**	257	13400	-
18.5	71	2450	0.94	20.98	**BG70-../DHE18LB4**	257	14600	-
18.5	65	2700	0.85	22.92	**BG70-../DHE18LB4**	257	15100	-
18.5	129	1360	3.1	11.43	**BG80-../DHE18LB4**	311	11600	-
18.5	116	1520	2.8	12.69	**BG80-../DHE18LB4**	311	12400	-
18.5	95	1850	2.3	15.62	**BG80-../DHE18LB4**	311	13700	-
18.5	85	2050	2.0	17.35	**BG80-../DHE18LB4**	311	14600	-
18.5	74	2350	1.8	19.89	**BG80-../DHE18LB4**	311	15500	-

The torques marked (*) are maximum permissible torques for service factor f_B=1,0.

18.5 kW

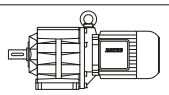

P_N	50 Hz			i	Type	m	F_{RN}	F_{RV}
	n_2	M_2	f_B					
[kW]	[1/min]	[Nm]	[—]	[:1]		[kg]	[N]	[N]
18.5	67	2600	1.6	22.09	**BG80-../DHE18LB4**	311	16500	-
18.5	56	3150	1.35	26.44	**BG80-../DHE18LB4**	311	17900	-
18.5	51	3450	1.2	29.36	**BG80-../DHE18LB4**	311	18900	-
18.5	43	4100	1.0	34.22	**BG80-../DHE18LB4**	311	20200	-
18.5	39	4500	0.93	38.00	**BG80-../DHE18LB4**	311	21300	-
18.5	33.5	5200	0.81	43.94	**BG80-../DHE18LB4**	311	22600	-
18.5	65	2700	3.1	22.62	**BG90-../DHE18LB4**	402	65000	-
18.5	60	2900	2.9	24.78	**BG90-../DHE18LB4**	402	65000	-
18.5	49.5	3550	2.4	29.78	**BG90-../DHE18LB4**	402	65000	-
18.5	45.5	3850	2.2	32.62	**BG90-../DHE18LB4**	402	65000	-
18.5	38.5	4550	1.85	38.21	**BG90-../DHE18LB4**	402	65000	-
18.5	35.5	4950	1.7	41.85	**BG90-../DHE18LB4**	402	65000	-
18.5	30.5	5700	1.45	48.82	**BG90-../DHE18LB4**	402	65000	-
18.5	27.5	6400	1.3	53.46	**BG90-../DHE18LB4**	402	65000	-
18.5	26	6700	1.0	57.04	**BG90Z-../DHE18LB4**	456	65000	-
18.5	24	7300	1.05	62.47	**BG90Z-../DHE18LB4**	456	65000	-
18.5	19.5	9000	0.93	76.61	**BG90Z-../DHE18LB4**	456	65000	-
18.5	18	9800	0.86	83.91	**BG90Z-../DHE18LB4**	456	65000	-
18.5	44	4000	3.2	33.71	**BG100-../DHE18LB4**	572	88500	-
18.5	39.5	4450	3.0	37.54	**BG100-../DHE18LB4**	572	90000	-
18.5	32	5500	2.6	46.43	**BG100-../DHE18LB4**	572	90000	-
18.5	28.5	6100	2.4	51.70	**BG100-../DHE18LB4**	572	90000	-
18.5	23.5	7500	2.1	63.49	**BG100-../DHE18LB4**	572	90000	-
18.5	21	8400	1.9	70.69	**BG100-../DHE18LB4**	572	90000	-
18.5	18.5	9500	1.75	80.85	**BG100-../DHE18LB4**	572	90000	-
18.5	16.5	10700	1.55	90.02	**BG100-../DHE18LB4**	572	90000	-
18.5	14	12600	1.35	107.5	**BG100-../DHE18LB4**	572	90000	-
18.5	12.5	14100	1.2	119.7	**BG100-../DHE18LB4**	572	90000	-
18.5	11	16000	1.05	139.1	**BG100-../DHE18LB4**	572	90000	-
18.5	9.5	18500	0.91	154.8	**BG100-../DHE18LB4**	572	90000	-

22 kW

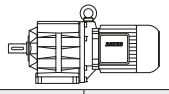

P_N	50 Hz			i	Type	m	F_{RN}	F_{RV}
	n_2	M_2	f_B					
[kW]	[1/min]	[Nm]	[—]	[:1]		[kg]	[N]	[N]
22	300	700	2.1	4.95	**BG70-../DHE18XB4**	275	6900	-
22	255	820	2.1	5.87	**BG70-../DHE18XB4**	275	8200	-
22	210	1000	2.2	7.14	**BG70-../DHE18XB4**	275	8800	-
22	174	1200	1.9	8.48	**BG70-../DHE18XB4**	275	9500	-
22	146	1430	1.6	10.09	**BG70-../DHE18XB4**	275	10200	-
22	123	1700	1.35	11.97	**BG70-../DHE18XB4**	275	11200	-
22	113	1850	1.25	13.08	**BG70-../DHE18XB4**	275	11600	-
22	95	2200	1.05	15.53	**BG70-../DHE18XB4**	275	12700	-
22	84	2500	0.92	17.68	**BG70-../DHE18XB4**	275	13400	-
22	250	840	3.2	5.94	**BG80-../DHE18XB4**	329	8300	-
22	225	930	3.2	6.60	**BG80-../DHE18XB4**	329	9100	-
22	178	1180	3.2	8.30	**BG80-../DHE18XB4**	329	10400	-
22	160	1310	3.0	9.21	**BG80-../DHE18XB4**	329	10800	-
22	129	1620	2.6	11.43	**BG80-../DHE18XB4**	329	11600	-
22	116	1810	2.3	12.69	**BG80-../DHE18XB4**	329	12400	-
22	95	2200	1.9	15.62	**BG80-../DHE18XB4**	329	13700	-
22	85	2450	1.7	17.35	**BG80-../DHE18XB4**	329	14600	-
22	74	2800	1.5	19.89	**BG80-../DHE18XB4**	329	15500	-
22	67	3100	1.35	22.09	**BG80-../DHE18XB4**	329	16500	-
22	56	3750	1.1	26.44	**BG80-../DHE18XB4**	329	17900	-
22	51	4100	1.0	29.36	**BG80-../DHE18XB4**	329	18900	-
22	43	4850	0.87	34.22	**BG80-../DHE18XB4**	329	20200	-
22	82	2550	3.2	17.96	**BG90-../DHE18XB4**	420	59800	-
22	75	2800	3.0	19.67	**BG90-../DHE18XB4**	420	62400	-
22	65	3200	2.6	22.62	**BG90-../DHE18XB4**	420	65000	-
22	60	3500	2.4	24.78	**BG90-../DHE18XB4**	420	65000	-
22	49.5	4200	2.0	29.78	**BG90-../DHE18XB4**	420	65000	-

The torques marked (*) are maximum permissible torques for service factor f_B=1,0.

22 kW

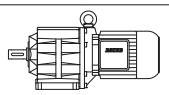

P_N	50 Hz			i	**Type**	m	F_{RN}	F_{RV}
	n_2	M_2	f_B					
[kW]	[1/min]	[Nm]	[—]	[:1]		[kg]	[N]	[N]
22	45.5	4600	1.85	32.62	**BG90-../DHE18XB4**	420	65000	-
22	38.5	5400	1.55	38.21	**BG90-../DHE18XB4**	420	65000	-
22	35.5	5900	1.4	41.85	**BG90-../DHE18XB4**	420	65000	-
22	30.5	6800	1.25	48.82	**BG90-../DHE18XB4**	420	65000	-
22	27.5	7600	1.1	53.46	**BG90-../DHE18XB4**	420	65000	-
22	26	8000	0.85	57.04	**BG90Z-../DHE18XB4**	474	65000	-
22	24	8700	0.86	62.47	**BG90Z-../DHE18XB4**	474	65000	-
22	44	4750	2.7	33.71	**BG100-../DHE18XB4**	590	88500	-
22	39.5	5300	2.5	37.54	**BG100-../DHE18XB4**	590	90000	-
22	32	6500	2.2	46.43	**BG100-../DHE18XB4**	590	90000	-
22	28.5	7300	2.0	51.70	**BG100-../DHE18XB4**	590	90000	-
22	23.5	8900	1.75	63.49	**BG100-../DHE18XB4**	590	90000	-
22	21	10000	1.6	70.69	**BG100-../DHE18XB4**	590	90000	-
22	18.5	11300	1.45	80.85	**BG100-../DHE18XB4**	590	90000	-
22	16.5	12700	1.3	90.02	**BG100-../DHE18XB4**	590	90000	-
22	14	15000	1.1	107.5	**BG100-../DHE18XB4**	590	90000	-
22	12.5	16800	1.0	119.7	**BG100-../DHE18XB4**	590	90000	-
22	11	19100	0.88	139.1	**BG100-../DHE18XB4**	590	90000	-

The torques marked (*) are maximum permissible torques for service factor f_B=1,0.

0.03 kW

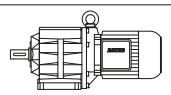

P_N	50 Hz			i	Type	m	F_{RN}	F_{RV}
	n_2	M_2	f_B					
[kW]	[1/min]	[Nm]	[—]	[:1]		[kg]	[N]	[N]
0.03	540	0.53	7.5	2.51	**BG04-../D04LA4**	4.4	340	-
0.03	370	0.77	6.5	3.65	**BG04-../D04LA4**	4.4	390	-
0.03	310	0.92	7.6	4.39	**BG04-../D04LA4**	4.4	380	-
0.03	255	1.12	8.0	5.36	**BG04-../D04LA4**	4.4	380	-
0.03	220	1.3	8.5	6.18	**BG04-../D04LA4**	4.4	415	-
0.03	205	1.39	7.2	6.67	**BG04-../D04LA4**	4.4	410	-
0.03	199	1.43	7.7	6.80	**BG04-../D04LA4**	4.4	420	-
0.03	158	1.81	6.1	8.58	**BG04-../D04LA4**	4.4	410	-
0.03	150	1.91	6.3	9.00	**BG04-../D04LA4**	4.4	470	-
0.03	137	2.05	6.3	9.90	**BG04-../D04LA4**	4.4	480	-
0.03	125	2.25	6.2	10.82	**BG04-../D04LA4**	4.4	480	-
0.03	114	2.5	6.0	11.90	**BG04-../D04LA4**	4.4	490	-
0.03	108	2.65	5.7	12.55	**BG04-../D04LA4**	4.4	490	-
0.03	103	2.75	5.8	13.20	**BG04-../D04LA4**	4.4	500	-
0.03	93	3.05	5.6	14.52	**BG04-../D04LA4**	4.4	510	-
0.03	83	3.45	5.2	16.44	**BG04-../D04LA4**	4.4	530	-
0.03	75	3.8	4.7	18.08	**BG04-../D04LA4**	4.4	540	-
0.03	64	4.45	4.3	21.12	**BG04-../D04LA4**	4.4	560	-
0.03	59	4.85	4.1	23.23	**BG04-../D04LA4**	4.4	600	-
0.03	56	5.1	3.9	24.45	**BG04-../D04LA4**	4.4	610	-
0.03	51	5.6	3.6	26.89	**BG04-../D04LA4**	4.4	650	-
0.03	44	6.5	3.1	30.91	**BG04-../D04LA4**	4.4	690	-
0.03	40	7.1	2.8	34.00	**BG04-../D04LA4**	4.4	720	-
0.03	38.5	7.4	2.7	35.35	**BG04-../D04LA4**	4.4	730	-
0.03	35	8.1	2.5	38.89	**BG04-../D04LA4**	4.4	750	-
0.03	32	8.9	2.2	42.24	**BG04-../D04LA4**	4.4	750	-
0.03	29.5	9.7	2.1	46.47	**BG04-../D04LA4**	4.4	750	-
0.03	28.5	10	2.0	47.52	**BG04-../D04LA4**	4.4	750	-
0.03	26	11	1.8	52.28	**BG04-../D04LA4**	4.4	750	-
0.03	25	11.4	1.75	54.97	**BG04-../D04LA4**	4.4	750	-
0.03	22.5	12.7	1.55	60.47	**BG04-../D04LA4**	4.4	750	-
0.03	31	9.2	3.3	43.57	**BG05-../D04LA4**	5.1	900	-
0.03	29	9.8	3.1	47.00	**BG05-../D04LA4**	5.1	930	-
0.03	26.5	10.8	2.8	51.27	**BG05-../D04LA4**	5.1	970	-
0.03	25.5	11.2	2.7	53.44	**BG05-../D04LA4**	5.1	980	-
0.03	23.5	12.1	2.5	58.30	**BG05-../D04LA4**	5.1	1000	-
0.03	18	13.8	2.9	75.99	**BG06G04-../D04LA4**	8.4	1070	-
0.03	16.5	15	2.9	82.89	**BG06G04-../D04LA4**	8.4	1070	-
0.03	15	16.5	2.7	93.00	**BG06G04-../D04LA4**	8.4	1070	-
0.03	13.5	18.4	2.4	101.5	**BG06G04-../D04LA4**	8.4	1070	-
0.03	11.5	21	2.1	122.0	**BG06G04-../D04LA4**	8.4	1070	-
0.03	9.1	26	1.75	149.0	**BG06G04-../D04LA4**	8.4	1070	-
0.03	7.3	33.5	1.35	185.4	**BG06G04-../D04LA4**	8.4	1070	-
0.03	5.4	46	0.98	250.2	**BG06G04-../D04LA4**	8.4	1070	-
0.03	5.0	50	0.9	275.2	**BG06G04-../D04LA4**	8.4	1070	-
0.03	4.1	45*	1.0	330.8	**BG06G04-../D04LA4**	8.4	1070	-
0.03	3.7	45*	1.0	367.0	**BG06G04-../D04LA4**	8.4	1070	-
0.03	3.0	45*	1.0	457.0	**BG06G04-../D04LA4**	8.4	1070	-
0.03	2.7	45*	1.0	502.6	**BG06G04-../D04LA4**	8.4	1070	-
0.03	2.3	45*	1.0	587.1	**BG06G04-../D04LA4**	8.4	1070	-
0.03	2.1	45*	1.0	645.8	**BG06G04-../D04LA4**	8.4	1070	-
0.03	1.9	45*	1.0	747.5	**BG06G04-../D04LA4**	8.4	1070	-
0.03	1.6	45*	1.0	859.3	**BG06G04-../D04LA4**	8.4	1070	-
0.03	1.5	45*	1.0	945.2	**BG06G04-../D04LA4**	8.4	1070	-
0.03	1.3	45*	1.0	1081	**BG06G04-../D04LA4**	8.4	1070	-
0.03	1.2	45*	1.0	1174	**BG06G04-../D04LA4**	8.4	1070	-
0.03	1.1	45*	1.0	1321	**BG06G04-../D04LA4**	8.4	1070	-
0.03	0.9	45*	1.0	1528	**BG06G04-../D04LA4**	8.4	1070	-
0.03	0.85	45*	1.0	1681	**BG06G04-../D04LA4**	8.4	1070	-
0.03	0.7	45*	1.0	1948	**BG06G04-../D04LA4**	8.4	1070	-
0.03	0.65	45*	1.0	2126	**BG06G04-../D04LA4**	8.4	1070	-
0.03	0.6	45*	1.0	2435	**BG06G04-../D04LA4**	8.4	1070	-
0.03	20.5	13.9	3.2	66.79	**BG06-../D04LA4**	6.1	1070	-
0.03	7.4	38.5	3.1	184.0	**BG10Z-../D04LA4**	11	2000	2800
0.03	7.0	40.5	3.0	194.6	**BG10Z-../D04LA4**	11	2000	2800
0.03	6.3	45	2.7	215.7	**BG10Z-../D04LA4**	11	2000	2800

0.03 kW

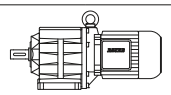

P_N	50 Hz			i	Type	m	F_{RN}	F_{RV}
	n_2	M_2	f_B					
[kW]	[1/min]	[Nm]	[—]	[:1]		[kg]	[N]	[N]
0.03	5.7	50	2.4	240.4	**BG10Z-../D04LA4**	11	2000	2800
0.03	5.1	56	2.1	266.3	**BG10Z-../D04LA4**	11	2000	2800
0.03	4.9	58	2.1	276.0	**BG10Z-../D04LA4**	11	2000	2800
0.03	4.5	63	1.9	305.8	**BG10Z-../D04LA4**	11	2000	2800
0.03	3.6	49	2.7	379.6	**BG10G06-../D04LA4**	14	2000	2800
0.03	3.1	57	2.3	435.9	**BG10G06-../D04LA4**	14	2000	2800
0.03	2.7	68	1.9	512.6	**BG10G06-../D04LA4**	14	2000	2800
0.03	2.3	83	1.55	613.6	**BG10G06-../D04LA4**	14	2000	2800
0.03	1.9	105	1.25	748.9	**BG10G06-../D04LA4**	14	2000	2800
0.03	1.6	130	1.0	899.5	**BG10G06-../D04LA4**	14	2000	2800
0.03	1.3	130*	1.0	1081	**BG10G06-../D04LA4**	14	2000	2800
0.03	1.1	130*	1.0	1272	**BG10G06-../D04LA4**	14	2000	2800
0.03	0.9	130*	1.0	1523	**BG10G06-../D04LA4**	14	2000	2800
0.03	0.75	130*	1.0	1863	**BG10G06-../D04LA4**	14	2000	2800
0.03	0.6	130*	1.0	2356	**BG10G06-../D04LA4**	14	2000	2800
0.03	0.55	130*	1.0	2699	**BG10G06-../D04LA4**	14	2000	2800
0.03	0.46	130*	1.0	2944	**BG10G06-../D04LA4**	14	2000	2800
0.03	0.4	130*	1.0	3378	**BG10G06-../D04LA4**	14	2000	2800
0.03	0.37	130*	1.0	3684	**BG10G06-../D04LA4**	14	2000	2800
0.03	0.31	130*	1.0	4477	**BG10G06-../D04LA4**	14	2000	2800
0.03	0.28	130*	1.0	4884	**BG10G06-../D04LA4**	14	2000	2800
0.03	2.5	77	2.9	550.6	**BG20G06-../D04LA4**	17	5000	2100
0.03	2.1	95	2.3	671.9	**BG20G06-../D04LA4**	17	5000	2100
0.03	1.7	125	1.75	807.1	**BG20G06-../D04LA4**	17	5000	2100
0.03	1.4	160	1.4	969.9	**BG20G06-../D04LA4**	17	5000	2100
0.03	1.2	188	1.15	1142	**BG20G06-../D04LA4**	17	5000	2100
0.03	1.0	230	0.96	1366	**BG20G06-../D04LA4**	17	5000	2100
0.03	0.85	220*	1.0	1672	**BG20G06-../D04LA4**	17	5000	2100
0.03	0.75	220*	1.0	1824	**BG20G06-../D04LA4**	17	5000	2100
0.03	0.65	220*	1.0	2114	**BG20G06-../D04LA4**	17	5000	2100
0.03	0.6	220*	1.0	2422	**BG20G06-../D04LA4**	17	5000	2100
0.03	0.55	220*	1.0	2642	**BG20G06-../D04LA4**	17	5000	2100
0.03	0.45	220*	1.0	3031	**BG20G06-../D04LA4**	17	5000	2100
0.03	0.41	220*	1.0	3306	**BG20G06-../D04LA4**	17	5000	2100
0.03	0.34	220*	1.0	4017	**BG20G06-../D04LA4**	17	5000	2100
0.03	0.31	220*	1.0	4383	**BG20G06-../D04LA4**	17	5000	2100
0.03	2.0	101	3.2	690.6	**BG30G06-../D04LA4**	21	6000	-
0.03	1.8	116	2.8	760.7	**BG30G06-../D04LA4**	21	6000	-
0.03	1.7	124	2.6	829.5	**BG30G06-../D04LA4**	21	6000	-
0.03	1.4	158	2.1	996.8	**BG30G06-../D04LA4**	21	6000	-
0.03	1.3	173	1.9	1088	**BG30G06-../D04LA4**	21	6000	-
0.03	1.1	205	1.6	1280	**BG30G06-../D04LA4**	21	6000	-
0.03	1.0	230	1.4	1404	**BG30G06-../D04LA4**	21	6000	-
0.03	0.8	295	1.1	1718	**BG30G06-../D04LA4**	21	6000	-
0.03	0.75	320	1.0	1875	**BG30G06-../D04LA4**	21	6000	-
0.03	0.65	325*	1.0	2173	**BG30G06-../D04LA4**	21	6000	-
0.03	0.5	325*	1.0	2715	**BG30G06-../D04LA4**	21	6000	-
0.03	0.44	325*	1.0	3115	**BG30G06-../D04LA4**	21	6000	-
0.03	0.4	325*	1.0	3398	**BG30G06-../D04LA4**	21	6000	-
0.03	0.35	325*	1.0	3867	**BG30G06-../D04LA4**	21	6000	-
0.03	0.3	325*	1.0	4504	**BG30G06-../D04LA4**	21	6000	-

0.04 kW

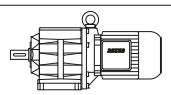

P_N	50 Hz			i	Type	m	F_{RN}	F_{RV}
	n_2	M_2	f_B					
[kW]	[1/min]	[Nm]	[—]	[:1]		[kg]	[N]	[N]
0.04	540	0.7	5.7	2.51	**BG04-../D04LA4**	4.4	340	-
0.04	370	1.03	4.9	3.65	**BG04-../D04LA4**	4.4	390	-
0.04	310	1.23	5.7	4.39	**BG04-../D04LA4**	4.4	380	-
0.04	255	1.49	6.0	5.36	**BG04-../D04LA4**	4.4	380	-
0.04	220	1.73	6.4	6.18	**BG04-../D04LA4**	4.4	415	-
0.04	205	1.86	5.4	6.67	**BG04-../D04LA4**	4.4	410	-
0.04	199	1.91	5.8	6.80	**BG04-../D04LA4**	4.4	420	-
0.04	158	2.4	4.6	8.58	**BG04-../D04LA4**	4.4	410	-

0.04 kW

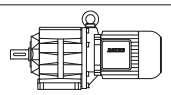

P_N	50 Hz			i	Type	m	F_{RN}	F_{RV}
	n_2	M_2	f_B					
[kW]	[1/min]	[Nm]	[—]	[:1]		[kg]	[N]	[N]
0.04	150	2.5	4.8	9.00	**BG04-../D04LA4**	4.4	470	-
0.04	137	2.75	4.7	9.90	**BG04-../D04LA4**	4.4	480	-
0.04	125	3.05	4.6	10.82	**BG04-../D04LA4**	4.4	480	-
0.04	114	3.35	4.5	11.90	**BG04-../D04LA4**	4.4	490	-
0.04	108	3.5	4.3	12.55	**BG04-../D04LA4**	4.4	490	-
0.04	103	3.7	4.3	13.20	**BG04-../D04LA4**	4.4	500	-
0.04	93	4.1	4.1	14.52	**BG04-../D04LA4**	4.4	510	-
0.04	83	4.6	3.9	16.44	**BG04-../D04LA4**	4.4	530	-
0.04	75	5.0	3.6	18.08	**BG04-../D04LA4**	4.4	540	-
0.04	64	5.9	3.2	21.12	**BG04-../D04LA4**	4.4	560	-
0.04	59	6.4	3.1	23.23	**BG04-../D04LA4**	4.4	600	-
0.04	56	6.8	2.9	24.45	**BG04-../D04LA4**	4.4	610	-
0.04	51	7.4	2.7	26.89	**BG04-../D04LA4**	4.4	650	-
0.04	44	8.6	2.3	30.91	**BG04-../D04LA4**	4.4	690	-
0.04	40	9.5	2.1	34.00	**BG04-../D04LA4**	4.4	720	-
0.04	38.5	9.9	2.0	35.35	**BG04-../D04LA4**	4.4	730	-
0.04	35	10.9	1.85	38.89	**BG04-../D04LA4**	4.4	750	-
0.04	32	11.9	1.7	42.24	**BG04-../D04LA4**	4.4	750	-
0.04	29.5	12.9	1.55	46.47	**BG04-../D04LA4**	4.4	750	-
0.04	28.5	13.4	1.5	47.52	**BG04-../D04LA4**	4.4	750	-
0.04	26	14.6	1.35	52.28	**BG04-../D04LA4**	4.4	750	-
0.04	25	15.2	1.3	54.97	**BG04-../D04LA4**	4.4	750	-
0.04	22.5	16.9	1.2	60.47	**BG04-../D04LA4**	4.4	750	-
0.04	39	9.7	3.1	35.00	**BG05-../D04LA4**	5.1	810	-
0.04	35.5	10.7	2.8	38.18	**BG05-../D04LA4**	5.1	850	-
0.04	34	11.2	2.7	39.94	**BG05-../D04LA4**	5.1	860	-
0.04	31	12.3	2.4	43.57	**BG05-../D04LA4**	5.1	900	-
0.04	29	13.1	2.3	47.00	**BG05-../D04LA4**	5.1	930	-
0.04	26.5	14.4	2.1	51.27	**BG05-../D04LA4**	5.1	970	-
0.04	25.5	14.9	2.0	53.44	**BG05-../D04LA4**	5.1	980	-
0.04	23.5	16.2	1.85	58.30	**BG05-../D04LA4**	5.1	1000	-
0.04	18	19.1	2.1	75.99	**BG06G04-../D04LA4**	8.4	1070	-
0.04	16.5	20.5	2.1	82.89	**BG06G04-../D04LA4**	8.4	1070	-
0.04	15	22.5	2.0	93.00	**BG06G04-../D04LA4**	8.4	1070	-
0.04	13.5	25.5	1.75	101.5	**BG06G04-../D04LA4**	8.4	1070	-
0.04	11.5	29	1.55	122.0	**BG06G04-../D04LA4**	8.4	1070	-
0.04	9.1	36.5	1.25	149.0	**BG06G04-../D04LA4**	8.4	1070	-
0.04	7.3	46.5	0.97	185.4	**BG06G04-../D04LA4**	8.4	1070	-
0.04	27	14.1	3.2	50.38	**BG06-../D04LA4**	6.1	940	-
0.04	26	14.6	3.1	52.56	**BG06-../D04LA4**	6.1	950	-
0.04	24	15.9	2.8	57.34	**BG06-../D04LA4**	6.1	1000	-
0.04	22.5	16.9	2.7	61.22	**BG06-../D04LA4**	6.1	1020	-
0.04	20.5	18.6	2.4	66.79	**BG06-../D04LA4**	6.1	1070	-
0.04	10.5	36	3.3	131.8	**BG10Z-../D04LA4**	11	2000	2800
0.04	9.3	41	2.9	146.0	**BG10Z-../D04LA4**	11	2000	2800
0.04	8.2	46.5	2.6	166.0	**BG10Z-../D04LA4**	11	2000	2800
0.04	7.4	51	2.4	184.0	**BG10Z-../D04LA4**	11	2000	2800
0.04	7.0	54	2.2	194.6	**BG10Z-../D04LA4**	11	2000	2800
0.04	6.3	60	2.0	215.7	**BG10Z-../D04LA4**	11	2000	2800
0.04	5.7	67	1.8	240.4	**BG10Z-../D04LA4**	11	2000	2800
0.04	5.1	74	1.6	266.3	**BG10Z-../D04LA4**	11	2000	2800
0.04	4.9	77	1.55	276.0	**BG10Z-../D04LA4**	11	2000	2800
0.04	4.5	84	1.45	305.8	**BG10Z-../D04LA4**	11	2000	2800
0.04	4.1	60	2.2	332.0	**BG10G06-../D04LA4**	14	2000	2800
0.04	3.6	75	1.75	379.6	**BG10G06-../D04LA4**	14	2000	2800
0.04	3.1	88	1.5	435.9	**BG10G06-../D04LA4**	14	2000	2800
0.04	2.7	103	1.25	512.6	**BG10G06-../D04LA4**	14	2000	2800
0.04	2.3	125	1.05	613.6	**BG10G06-../D04LA4**	14	2000	2800
0.04	1.9	155	0.84	748.9	**BG10G06-../D04LA4**	14	2000	2800
0.04	6.1	62	3.2	222.1	**BG20Z-../D04LA4**	13	5000	-
0.04	3.9	69	3.2	352.1	**BG20G06-../D04LA4**	17	5000	2100
0.04	3.5	77	2.9	391.1	**BG20G06-../D04LA4**	17	5000	2100
0.04	3.0	93	2.4	460.0	**BG20G06-../D04LA4**	17	5000	2100
0.04	2.5	116	1.9	550.6	**BG20G06-../D04LA4**	17	5000	2100
0.04	2.1	141	1.55	671.9	**BG20G06-../D04LA4**	17	5000	2100

0.04 kW

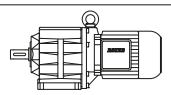

P_N	50 Hz			i	Type	m	F_{RN}	F_{RV}
	n_2	M_2	f_B					
[kW]	[1/min]	[Nm]	[—]	[:1]		[kg]	[N]	[N]
0.04	1.7	181	1.2	807.1	**BG20G06-../D04LA4**	17	5000	2100
0.04	1.4	225	0.98	969.9	**BG20G06-../D04LA4**	17	5000	2100
0.04	1.2	265	0.83	1142	**BG20G06-../D04LA4**	17	5000	2100
0.04	2.4	121	2.7	565.8	**BG30G06-../D04LA4**	21	6000	-
0.04	2.0	149	2.2	690.6	**BG30G06-../D04LA4**	21	6000	-
0.04	1.8	169	1.9	760.7	**BG30G06-../D04LA4**	21	6000	-
0.04	1.7	180	1.8	829.5	**BG30G06-../D04LA4**	21	6000	-
0.04	1.4	225	1.45	996.8	**BG30G06-../D04LA4**	21	6000	-
0.04	1.3	245	1.35	1088	**BG30G06-../D04LA4**	21	6000	-
0.04	1.1	290	1.1	1280	**BG30G06-../D04LA4**	21	6000	-
0.04	1.0	325	1.0	1404	**BG30G06-../D04LA4**	21	6000	-

0.06 kW

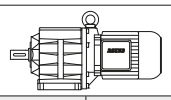

P_N	50 Hz			i	Type	m	F_{RN}	F_{RV}
	n_2	M_2	f_B					
[kW]	[1/min]	[Nm]	[—]	[:1]		[kg]	[N]	[N]
0.06	540	1.06	3.8	2.51	**BG04-../D04LA4**	4.4	340	-
0.06	370	1.54	3.2	3.65	**BG04-../D04LA4**	4.4	390	-
0.06	310	1.84	3.8	4.39	**BG04-../D04LA4**	4.4	380	-
0.06	255	2.2	4.1	5.36	**BG04-../D04LA4**	4.4	380	-
0.06	220	2.6	4.2	6.18	**BG04-../D04LA4**	4.4	415	-
0.06	205	2.75	3.6	6.67	**BG04-../D04LA4**	4.4	410	-
0.06	199	2.85	3.9	6.80	**BG04-../D04LA4**	4.4	420	-
0.06	158	3.6	3.1	8.58	**BG04-../D04LA4**	4.4	410	-
0.06	150	3.8	3.2	9.00	**BG04-../D04LA4**	4.4	470	-
0.06	137	4.15	3.1	9.90	**BG04-../D04LA4**	4.4	480	-
0.06	125	4.55	3.1	10.82	**BG04-../D04LA4**	4.4	480	-
0.06	114	5.0	3.0	11.90	**BG04-../D04LA4**	4.4	490	-
0.06	108	5.3	2.8	12.55	**BG04-../D04LA4**	4.4	490	-
0.06	103	5.5	2.9	13.20	**BG04-../D04LA4**	4.4	500	-
0.06	93	6.1	2.8	14.52	**BG04-../D04LA4**	4.4	510	-
0.06	83	6.9	2.6	16.44	**BG04-../D04LA4**	4.4	530	-
0.06	75	7.6	2.4	18.08	**BG04-../D04LA4**	4.4	540	-
0.06	64	8.9	2.1	21.12	**BG04-../D04LA4**	4.4	560	-
0.06	59	9.7	2.1	23.23	**BG04-../D04LA4**	4.4	600	-
0.06	56	10.2	1.95	24.45	**BG04-../D04LA4**	4.4	610	-
0.06	51	11.2	1.8	26.89	**BG04-../D04LA4**	4.4	650	-
0.06	44	13	1.55	30.91	**BG04-../D04LA4**	4.4	690	-
0.06	40	14.3	1.4	34.00	**BG04-../D04LA4**	4.4	720	-
0.06	38.5	14.8	1.35	35.35	**BG04-../D04LA4**	4.4	730	-
0.06	35	16.3	1.25	38.89	**BG04-../D04LA4**	4.4	750	-
0.06	32	17.9	1.1	42.24	**BG04-../D04LA4**	4.4	750	-
0.06	29.5	19.4	1.05	46.47	**BG04-../D04LA4**	4.4	750	-
0.06	28.5	20	1.0	47.52	**BG04-../D04LA4**	4.4	750	-
0.06	26	22	0.91	52.28	**BG04-../D04LA4**	4.4	750	-
0.06	25	22.5	0.89	54.97	**BG04-../D04LA4**	4.4	750	-
0.06	22.5	25	0.8	60.47	**BG04-../D04LA4**	4.4	750	-
0.06	72	7.9	3.3	18.82	**BG05-../D04LA4**	5.1	680	-
0.06	66	8.6	3.1	20.53	**BG05-../D04LA4**	5.1	700	-
0.06	57	10	2.8	24.00	**BG05-../D04LA4**	5.1	740	-
0.06	52	11	2.6	26.18	**BG05-../D04LA4**	5.1	760	-
0.06	49	11.6	2.6	27.82	**BG05-../D04LA4**	5.1	770	-
0.06	44.5	12.8	2.3	30.35	**BG05-../D04LA4**	5.1	760	-
0.06	39	14.6	2.1	35.00	**BG05-../D04LA4**	5.1	810	-
0.06	35.5	16.1	1.85	38.18	**BG05-../D04LA4**	5.1	850	-
0.06	34	16.8	1.8	39.94	**BG05-../D04LA4**	5.1	860	-
0.06	31	18.4	1.65	43.57	**BG05-../D04LA4**	5.1	900	-
0.06	29	19.7	1.5	47.00	**BG05-../D04LA4**	5.1	930	-
0.06	26.5	21.5	1.4	51.27	**BG05-../D04LA4**	5.1	970	-
0.06	25.5	22	1.35	53.44	**BG05-../D04LA4**	5.1	980	-
0.06	23.5	24	1.25	58.30	**BG05-../D04LA4**	5.1	1000	-
0.06	18	29.5	1.35	75.99	**BG06G04-../D04LA4**	8.4	1070	-
0.06	16.5	32	1.35	82.89	**BG06G04-../D04LA4**	8.4	1070	-

0.06 kW

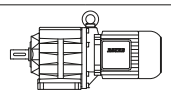

P_N	50 Hz			i	Type	m	F_{RN}	F_{RV}
	n_2	M_2	f_B					
[kW]	[1/min]	[Nm]	[—]	[:1]		[kg]	[N]	[N]
0.06	15	35.5	1.25	93.00	**BG06G04-../D04LA4**	8.4	1070	-
0.06	13.5	39.5	1.15	101.5	**BG06G04-../D04LA4**	8.4	1070	-
0.06	11.5	45.5	0.99	122.0	**BG06G04-../D04LA4**	8.4	1070	-
0.06	42	13.6	3.3	32.22	**BG06-../D04LA4**	6.1	890	-
0.06	38.5	14.8	3.0	35.15	**BG06-../D04LA4**	6.1	880	-
0.06	37	15.4	2.9	36.91	**BG06-../D04LA4**	6.1	890	-
0.06	34	16.8	2.7	40.26	**BG06-../D04LA4**	6.1	890	-
0.06	29.5	19.4	2.3	46.19	**BG06-../D04LA4**	6.1	890	-
0.06	27	21	2.1	50.38	**BG06-../D04LA4**	6.1	940	-
0.06	26	22	2.0	52.56	**BG06-../D04LA4**	6.1	950	-
0.06	24	23.5	1.9	57.34	**BG06-../D04LA4**	6.1	1000	-
0.06	22.5	25	1.8	61.22	**BG06-../D04LA4**	6.1	1020	-
0.06	20.5	27.5	1.65	66.79	**BG06-../D04LA4**	6.1	1070	-
0.06	15	38	3.2	92.19	**BG10Z-../D06LA4**	14	2000	2800
0.06	13.5	42	2.9	102.1	**BG10Z-../D06LA4**	14	2000	2800
0.06	12.5	45.5	2.6	109.8	**BG10Z-../D06LA4**	14	2000	2800
0.06	11.5	49.5	2.4	121.7	**BG10Z-../D06LA4**	14	2000	2800
0.06	10.5	54	2.2	131.8	**BG10Z-../D06LA4**	14	2000	2800
0.06	9.3	61	1.95	146.0	**BG10Z-../D06LA4**	14	2000	2800
0.06	8.2	69	1.75	166.0	**BG10Z-../D06LA4**	14	2000	2800
0.06	7.4	77	1.55	184.0	**BG10Z-../D06LA4**	14	2000	2800
0.06	7.0	81	1.5	194.6	**BG10Z-../D06LA4**	14	2000	2800
0.06	6.3	90	1.35	215.7	**BG10Z-../D06LA4**	14	2000	2800
0.06	5.7	100	1.2	240.4	**BG10Z-../D06LA4**	14	2000	2800
0.06	5.1	112	1.05	266.3	**BG10Z-../D06LA4**	14	2000	2800
0.06	4.9	116	1.05	276.0	**BG10Z-../D06LA4**	14	2000	2800
0.06	4.5	127	0.94	305.8	**BG10Z-../D06LA4**	14	2000	2800
0.06	4.1	107	1.2	332.0	**BG10G06-../D06LA4**	18	2000	2800
0.06	3.6	128	1.0	379.6	**BG10G06-../D06LA4**	18	2000	2800
0.06	3.1	149	0.87	435.9	**BG10G06-../D06LA4**	18	2000	2800
0.06	8.4	68	2.9	162.2	**BG20Z-../D06LA4**	16	5000	-
0.06	7.5	76	2.6	180.1	**BG20Z-../D06LA4**	16	5000	-
0.06	6.8	84	2.4	199.9	**BG20Z-../D06LA4**	16	5000	-
0.06	6.1	93	2.2	222.1	**BG20Z-../D06LA4**	16	5000	-
0.06	5.5	77	2.9	248.0	**BG20G06-../D06LA4**	20	5000	2100
0.06	4.6	95	2.3	297.9	**BG20G06-../D06LA4**	20	5000	2100
0.06	3.9	118	1.85	352.1	**BG20G06-../D06LA4**	20	5000	2100
0.06	3.5	132	1.65	391.1	**BG20G06-../D06LA4**	20	5000	2100
0.06	3.0	156	1.4	460.0	**BG20G06-../D06LA4**	20	5000	2100
0.06	2.5	192	1.15	550.6	**BG20G06-../D06LA4**	20	5000	2100
0.06	2.1	230	0.96	671.9	**BG20G06-../D06LA4**	20	5000	2100
0.06	6.0	95	3.2	225.9	**BG30Z-../D06LA4**	22	6000	-
0.06	5.2	110	2.7	261.9	**BG30Z-../D06LA4**	22	6000	-
0.06	4.7	121	2.5	290.5	**BG30Z-../D06LA4**	22	6000	-
0.06	3.9	118	2.8	346.8	**BG30G06-../D06LA4**	25	6000	-
0.06	3.4	136	2.4	401.9	**BG30G06-../D06LA4**	25	6000	-
0.06	2.9	162	2.0	472.8	**BG30G06-../D06LA4**	25	6000	-
0.06	2.4	200	1.65	565.8	**BG30G06-../D06LA4**	25	6000	-
0.06	2.0	240	1.35	690.6	**BG30G06-../D06LA4**	25	6000	-
0.06	1.8	275	1.2	760.7	**BG30G06-../D06LA4**	25	6000	-
0.06	1.7	290	1.1	829.5	**BG30G06-../D06LA4**	25	6000	-
0.06	1.4	360	0.9	996.8	**BG30G06-../D06LA4**	25	6000	-
0.06	1.3	390	0.83	1088	**BG30G06-../D06LA4**	25	6000	-
0.06	2.2	147	3.2	640.0	**BG40G10-../D06LA4**	43	7000	-
0.06	1.9	176	2.6	710.9	**BG40G10-../D06LA4**	43	7000	-
0.06	1.8	179	2.6	789.1	**BG40G10-../D06LA4**	43	7000	-
0.06	1.4	255	1.8	965.2	**BG40G10-../D06LA4**	43	7000	-
0.06	1.2	315	1.5	1225	**BG40G10-../D06LA4**	43	7000	-
0.06	0.95	440	1.05	1459	**BG40G10-../D06LA4**	43	7000	-
0.06	1.5	230	3.0	960.2	**BG50G10-../D06LA4**	51	10000	-
0.06	1.2	315	2.2	1219	**BG50G10-../D06LA4**	51	10000	-
0.06	0.95	445	1.55	1452	**BG50G10-../D06LA4**	51	10000	-
0.06	0.8	550	1.25	1729	**BG50G10-../D06LA4**	51	10000	-
0.06	0.7	660	1.05	2076	**BG50G10-../D06LA4**	51	10000	-

0.06 kW

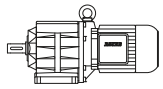

P_N	50 Hz			i	Type	m	F_{RN}	F_{RV}
	n_2	M_2	f_B					
[kW]	[1/min]	[Nm]	[—]	[:1]		[kg]	[N]	[N]
0.06	0.8	445	2.9	1741	**BG60G20-../D06LA4**	100	16000	-
0.06	0.75	490	2.7	1880	**BG60G20-../D06LA4**	100	16000	-
0.06	0.65	610	2.1	2249	**BG60G20-../D06LA4**	100	16000	-
0.06	0.48	920	1.4	2818	**BG60G20-../D06LA4**	100	16000	-
0.06	0.42	1090	1.2	3234	**BG60G20-../D06LA4**	100	16000	-
0.06	0.38	1230	1.05	3592	**BG60G20-../D06LA4**	100	16000	-
0.06	0.49	930	2.7	2774	**BG70G20-../D06LA4**	130	20000	-
0.06	0.43	1090	2.3	3184	**BG70G20-../D06LA4**	130	20000	-
0.06	0.35	1390	1.8	3925	**BG70G20-../D06LA4**	130	20000	-

0.09 kW

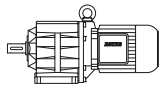

P_N	50 Hz			i	Type	m	F_{RN}	F_{RV}
	n_2	M_2	f_B					
[kW]	[1/min]	[Nm]	[—]	[:1]		[kg]	[N]	[N]
0.09	540	1.59	2.5	2.51	**BG04-../D04LA4**	4.4	340	-
0.09	370	2.3	2.2	3.65	**BG04-../D04LA4**	4.4	390	-
0.09	310	2.75	2.5	4.39	**BG04-../D04LA4**	4.4	380	-
0.09	255	3.35	2.7	5.36	**BG04-../D04LA4**	4.4	380	-
0.09	220	3.9	2.8	6.18	**BG04-../D04LA4**	4.4	415	-
0.09	205	4.15	2.4	6.67	**BG04-../D04LA4**	4.4	410	-
0.09	199	4.3	2.6	6.80	**BG04-../D04LA4**	4.4	420	-
0.09	158	5.4	2.0	8.58	**BG04-../D04LA4**	4.4	410	-
0.09	150	5.7	2.1	9.00	**BG04-../D04LA4**	4.4	470	-
0.09	137	6.2	2.1	9.90	**BG04-../D04LA4**	4.4	480	-
0.09	125	6.8	2.1	10.82	**BG04-../D04LA4**	4.4	480	-
0.09	114	7.5	2.0	11.90	**BG04-../D04LA4**	4.4	490	-
0.09	108	7.9	1.9	12.55	**BG04-../D04LA4**	4.4	490	-
0.09	103	8.3	1.95	13.20	**BG04-../D04LA4**	4.4	500	-
0.09	93	9.2	1.85	14.52	**BG04-../D04LA4**	4.4	510	-
0.09	83	10.3	1.75	16.44	**BG04-../D04LA4**	4.4	530	-
0.09	75	11.4	1.6	18.08	**BG04-../D04LA4**	4.4	540	-
0.09	64	13.4	1.4	21.12	**BG04-../D04LA4**	4.4	560	-
0.09	59	14.5	1.4	23.23	**BG04-../D04LA4**	4.4	600	-
0.09	56	15.3	1.3	24.45	**BG04-../D04LA4**	4.4	610	-
0.09	51	16.8	1.2	26.89	**BG04-../D04LA4**	4.4	650	-
0.09	44	19.5	1.05	30.91	**BG04-../D04LA4**	4.4	690	-
0.09	40	21	0.95	34.00	**BG04-../D04LA4**	4.4	720	-
0.09	38.5	22	0.91	35.35	**BG04-../D04LA4**	4.4	730	-
0.09	35	24.5	0.82	38.89	**BG04-../D04LA4**	4.4	750	-
0.09	128	6.7	3.0	10.59	**BG05-../D04LA4**	5.1	590	-
0.09	117	7.3	2.9	11.55	**BG05-../D04LA4**	5.1	600	-
0.09	113	7.6	2.8	12.05	**BG05-../D04LA4**	5.1	510	-
0.09	108	7.9	2.8	12.60	**BG05-../D04LA4**	5.1	610	-
0.09	99	8.6	2.7	13.75	**BG05-../D04LA4**	5.1	630	-
0.09	89	9.6	2.5	15.23	**BG05-../D04LA4**	5.1	640	-
0.09	82	10.4	2.4	16.62	**BG05-../D04LA4**	5.1	660	-
0.09	72	11.9	2.2	18.82	**BG05-../D04LA4**	5.1	680	-
0.09	66	13	2.1	20.53	**BG05-../D04LA4**	5.1	700	-
0.09	57	15	1.85	24.00	**BG05-../D04LA4**	5.1	740	-
0.09	52	16.5	1.75	26.18	**BG05-../D04LA4**	5.1	760	-
0.09	49	17.5	1.7	27.82	**BG05-../D04LA4**	5.1	770	-
0.09	44.5	19.3	1.55	30.35	**BG05-../D04LA4**	5.1	760	-
0.09	39	22	1.35	35.00	**BG05-../D04LA4**	5.1	810	-
0.09	35.5	24	1.25	38.18	**BG05-../D04LA4**	5.1	850	-
0.09	34	25	1.2	39.94	**BG05-../D04LA4**	5.1	860	-
0.09	31	27.5	1.1	43.57	**BG05-../D04LA4**	5.1	900	-
0.09	29	29.5	1.0	47.00	**BG05-../D04LA4**	5.1	930	-
0.09	26.5	32	0.94	51.27	**BG05-../D04LA4**	5.1	970	-
0.09	25.5	33.5	0.9	53.44	**BG05-../D04LA4**	5.1	980	-
0.09	23.5	36.5	0.82	58.30	**BG05-../D04LA4**	5.1	1000	-
0.09	18	45.5	0.88	75.99	**BG06G04-../D04LA4**	8.4	1070	-
0.09	16.5	49.5	0.87	82.89	**BG06G04-../D04LA4**	8.4	1070	-
0.09	15	54	0.83	93.00	**BG06G04-../D04LA4**	8.4	1070	-

0.09 kW

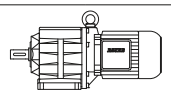

P_N	50 Hz			i	Type	m	F_{RN}	F_{RV}
	n_2	M_2	f_B					
[kW]	[1/min]	[Nm]	[—]	[:1]		[kg]	[N]	[N]
0.09	65	13.2	3.0	20.82	**BG06-../D04LA4**	6.1	800	-
0.09	60	14.3	3.0	22.71	**BG06-../D04LA4**	6.1	810	-
0.09	53	16.2	2.8	25.48	**BG06-../D04LA4**	6.1	850	-
0.09	49	17.5	2.6	27.80	**BG06-../D04LA4**	6.1	840	-
0.09	42	20	2.3	32.22	**BG06-../D04LA4**	6.1	890	-
0.09	38.5	22	2.0	35.15	**BG06-../D04LA4**	6.1	880	-
0.09	37	23	1.95	36.91	**BG06-../D04LA4**	6.1	890	-
0.09	34	25	1.8	40.26	**BG06-../D04LA4**	6.1	890	-
0.09	29.5	29	1.55	46.19	**BG06-../D04LA4**	6.1	890	-
0.09	27	31.5	1.45	50.38	**BG06-../D04LA4**	6.1	940	-
0.09	26	33	1.35	52.56	**BG06-../D04LA4**	6.1	950	-
0.09	24	35.5	1.25	57.34	**BG06-../D04LA4**	6.1	1000	-
0.09	22.5	38	1.2	61.22	**BG06-../D04LA4**	6.1	1020	-
0.09	20.5	41.5	1.1	66.79	**BG06-../D04LA4**	6.1	1070	-
0.09	23.5	36.5	3.3	57.48	**BG10-../D06LA4**	13	2000	2800
0.09	21.5	39.5	3.0	63.69	**BG10-../D06LA4**	13	2000	2800
0.09	20.5	41.5	2.9	66.00	**BG10-../D06LA4**	13	2000	2800
0.09	18.5	46	2.6	73.13	**BG10-../D06LA4**	13	2000	2800
0.09	17.5	49	2.4	77.40	**BG10Z-../D06LA4**	14	2000	2800
0.09	16	53	2.3	85.76	**BG10Z-../D06LA4**	14	2000	2800
0.09	15	57	2.1	92.19	**BG10Z-../D06LA4**	14	2000	2800
0.09	13.5	63	1.9	102.1	**BG10Z-../D06LA4**	14	2000	2800
0.09	12.5	68	1.75	109.8	**BG10Z-../D06LA4**	14	2000	2800
0.09	11.5	74	1.6	121.7	**BG10Z-../D06LA4**	14	2000	2800
0.09	10.5	81	1.5	131.8	**BG10Z-../D06LA4**	14	2000	2800
0.09	9.3	92	1.3	146.0	**BG10Z-../D06LA4**	14	2000	2800
0.09	8.2	104	1.15	166.0	**BG10Z-../D06LA4**	14	2000	2800
0.09	7.4	116	1.05	184.0	**BG10Z-../D06LA4**	14	2000	2800
0.09	7.0	122	0.98	194.6	**BG10Z-../D06LA4**	14	2000	2800
0.09	6.3	136	0.88	215.7	**BG10Z-../D06LA4**	14	2000	2800
0.09	5.7	150	0.8	240.4	**BG10Z-../D06LA4**	14	2000	2800
0.09	4.9	146	0.89	276.4	**BG10G06-../D06LA4**	18	2000	2800
0.09	13	66	3.0	104.7	**BG20Z-../D06LA4**	16	5000	-
0.09	12	71	2.8	112.8	**BG20Z-../D06LA4**	16	5000	-
0.09	11	78	2.6	125.3	**BG20Z-../D06LA4**	16	5000	-
0.09	9.6	89	2.2	141.3	**BG20Z-../D06LA4**	16	5000	-
0.09	8.4	102	1.95	162.2	**BG20Z-../D06LA4**	16	5000	-
0.09	7.5	114	1.75	180.1	**BG20Z-../D06LA4**	16	5000	-
0.09	6.8	126	1.6	199.9	**BG20Z-../D06LA4**	16	5000	-
0.09	6.1	140	1.45	222.1	**BG20Z-../D06LA4**	16	5000	-
0.09	5.5	130	1.7	248.0	**BG20G06-../D06LA4**	20	5000	2100
0.09	4.6	157	1.4	297.9	**BG20G06-../D06LA4**	20	5000	2100
0.09	3.9	192	1.15	352.1	**BG20G06-../D06LA4**	20	5000	2100
0.09	3.5	210	1.05	391.1	**BG20G06-../D06LA4**	20	5000	2100
0.09	3.0	250	0.88	460.0	**BG20G06-../D06LA4**	20	5000	2100
0.09	9.5	90	3.3	142.5	**BG30Z-../D06LA4**	22	6000	-
0.09	9.0	95	3.2	151.5	**BG30Z-../D06LA4**	22	6000	-
0.09	8.1	106	2.8	168.1	**BG30Z-../D06LA4**	22	6000	-
0.09	7.4	116	2.6	182.9	**BG30Z-../D06LA4**	22	6000	-
0.09	6.7	128	2.3	202.9	**BG30Z-../D06LA4**	22	6000	-
0.09	6.0	143	2.1	225.9	**BG30Z-../D06LA4**	22	6000	-
0.09	5.2	165	1.8	261.9	**BG30Z-../D06LA4**	22	6000	-
0.09	4.7	182	1.65	290.5	**BG30Z-../D06LA4**	22	6000	-
0.09	4.5	161	2.0	306.2	**BG30G06-../D06LA4**	25	6000	-
0.09	3.9	192	1.7	346.8	**BG30G06-../D06LA4**	25	6000	-
0.09	3.4	220	1.5	401.9	**BG30G06-../D06LA4**	25	6000	-
0.09	2.9	260	1.25	472.8	**BG30G06-../D06LA4**	25	6000	-
0.09	2.4	320	1.0	565.8	**BG30G06-../D06LA4**	25	6000	-
0.09	2.0	385	0.84	690.6	**BG30G06-../D06LA4**	25	6000	-
0.09	6.1	140	3.0	221.9	**BG40Z-../D06LA4**	38	7000	-
0.09	5.5	156	2.7	246.5	**BG40Z-../D06LA4**	38	7000	-
0.09	5.0	171	2.5	273.6	**BG40Z-../D06LA4**	38	7000	-
0.09	3.1	170	2.7	448.8	**BG40G10-../D06LA4**	43	7000	-
0.09	2.6	210	2.2	534.2	**BG40G10-../D06LA4**	43	7000	-
0.09	2.2	275	1.7	640.0	**BG40G10-../D06LA4**	43	7000	-
0.09	1.9	325	1.45	710.9	**BG40G10-../D06LA4**	43	7000	-

0.09 kW

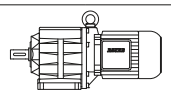

P_N	50 Hz			i	Type	m	F_{RN}	F_{RV}
	n_2	M_2	f_B					
[kW]	[1/min]	[Nm]	[—]	[:1]		[kg]	[N]	[N]
0.09	1.8	335	1.4	789.1	**BG40G10-../D06LA4**	43	7000	-
0.09	1.4	460	1.0	965.2	**BG40G10-../D06LA4**	43	7000	-
0.09	1.2	550	0.85	1225	**BG40G10-../D06LA4**	43	7000	-
0.09	2.6	210	3.3	531.5	**BG50G10-../D06LA4**	51	10000	-
0.09	2.2	280	2.5	621.3	**BG50G10-../D06LA4**	51	10000	-
0.09	2.0	300	2.3	708.3	**BG50G10-../D06LA4**	51	10000	-
0.09	1.8	335	2.1	785.1	**BG50G10-../D06LA4**	51	10000	-
0.09	1.5	420	1.65	960.2	**BG50G10-../D06LA4**	51	10000	-
0.09	1.2	550	1.25	1219	**BG50G10-../D06LA4**	51	10000	-
0.09	1.3	420	3.1	1051	**BG60G20-../D06LA4**	100	16000	-
0.09	1.2	465	2.8	1168	**BG60G20-../D06LA4**	100	16000	-
0.09	1.1	510	2.5	1346	**BG60G20-../D06LA4**	100	16000	-
0.09	0.95	630	2.1	1496	**BG60G20-../D06LA4**	100	16000	-
0.09	0.8	800	1.65	1741	**BG60G20-../D06LA4**	100	16000	-
0.09	0.75	870	1.5	1880	**BG60G20-../D06LA4**	100	16000	-
0.09	0.65	1050	1.25	2249	**BG60G20-../D06LA4**	100	16000	-
0.09	0.85	770	3.2	1666	**BG70G20-../D06LA4**	130	20000	-
0.09	0.7	980	2.6	1994	**BG70G20-../D06LA4**	130	20000	-
0.09	0.65	1080	2.3	2215	**BG70G20-../D06LA4**	130	20000	-
0.09	0.49	1510	1.65	2774	**BG70G20-../D06LA4**	130	20000	-
0.09	0.43	1750	1.45	3184	**BG70G20-../D06LA4**	130	20000	-
0.09	0.35	2200	1.15	3925	**BG70G20-../D06LA4**	130	20000	-

0.11 kW

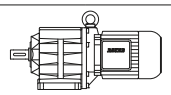

P_N	50 Hz			i	Type	m	F_{RN}	F_{RV}
	n_2	M_2	f_B					
[kW]	[1/min]	[Nm]	[—]	[:1]		[kg]	[N]	[N]
0.11	540	1.94	2.1	2.51	**BG04-../D04LA4**	4.4	340	-
0.11	370	2.8	1.8	3.65	**BG04-../D04LA4**	4.4	390	-
0.11	310	3.35	2.1	4.39	**BG04-../D04LA4**	4.4	380	-
0.11	255	4.1	2.2	5.36	**BG04-../D04LA4**	4.4	380	-
0.11	220	4.75	2.3	6.18	**BG04-../D04LA4**	4.4	415	-
0.11	205	5.1	1.95	6.67	**BG04-../D04LA4**	4.4	410	-
0.11	199	5.2	2.1	6.80	**BG04-../D04LA4**	4.4	420	-
0.11	158	6.6	1.65	8.58	**BG04-../D04LA4**	4.4	410	-
0.11	150	7.0	1.7	9.00	**BG04-../D04LA4**	4.4	470	-
0.11	137	7.6	1.7	9.90	**BG04-../D04LA4**	4.4	480	-
0.11	125	8.4	1.65	10.82	**BG04-../D04LA4**	4.4	480	-
0.11	114	9.2	1.65	11.90	**BG04-../D04LA4**	4.4	490	-
0.11	108	9.7	1.55	12.55	**BG04-../D04LA4**	4.4	490	-
0.11	103	10.1	1.6	13.20	**BG04-../D04LA4**	4.4	500	-
0.11	93	11.2	1.5	14.52	**BG04-../D04LA4**	4.4	510	-
0.11	83	12.6	1.45	16.44	**BG04-../D04LA4**	4.4	530	-
0.11	75	14	1.3	18.08	**BG04-../D04LA4**	4.4	540	-
0.11	64	16.4	1.15	21.12	**BG04-../D04LA4**	4.4	560	-
0.11	59	17.8	1.1	23.23	**BG04-../D04LA4**	4.4	600	-
0.11	56	18.7	1.05	24.45	**BG04-../D04LA4**	4.4	610	-
0.11	51	20.5	0.98	26.89	**BG04-../D04LA4**	4.4	650	-
0.11	44	23.5	0.85	30.91	**BG04-../D04LA4**	4.4	690	-
0.11	250	4.2	3.3	5.46	**BG05-../D04LA4**	5.1	490	-
0.11	205	5.1	3.3	6.64	**BG05-../D04LA4**	5.1	500	-
0.11	174	6.0	3.0	7.80	**BG05-../D04LA4**	5.1	530	-
0.11	166	6.3	2.9	8.15	**BG05-../D04LA4**	5.1	510	-
0.11	159	6.6	2.9	8.51	**BG05-../D04LA4**	5.1	550	-
0.11	128	8.2	2.4	10.59	**BG05-../D04LA4**	5.1	590	-
0.11	117	8.9	2.4	11.55	**BG05-../D04LA4**	5.1	600	-
0.11	113	9.2	2.3	12.05	**BG05-../D04LA4**	5.1	510	-
0.11	108	9.7	2.3	12.60	**BG05-../D04LA4**	5.1	610	-
0.11	99	10.6	2.2	13.75	**BG05-../D04LA4**	5.1	630	-
0.11	89	11.8	2.0	15.23	**BG05-../D04LA4**	5.1	640	-
0.11	82	12.8	1.95	16.62	**BG05-../D04LA4**	5.1	660	-
0.11	72	14.5	1.8	18.82	**BG05-../D04LA4**	5.1	680	-

0.11 kW

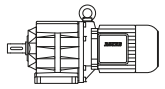

P_N	50 Hz			i	Type	m	F_{RN}	F_{RV}
	n_2	M_2	f_B					
[kW]	[1/min]	[Nm]	[—]	[:1]		[kg]	[N]	[N]
0.11	66	15.9	1.7	20.53	**BG05-../D04LA4**	5.1	700	-
0.11	57	18.4	1.5	24.00	**BG05-../D04LA4**	5.1	740	-
0.11	52	20	1.45	26.18	**BG05-../D04LA4**	5.1	760	-
0.11	49	21	1.45	27.82	**BG05-../D04LA4**	5.1	770	-
0.11	44.5	23.5	1.3	30.35	**BG05-../D04LA4**	5.1	760	-
0.11	39	26.5	1.15	35.00	**BG05-../D04LA4**	5.1	810	-
0.11	35.5	29.5	1.0	38.18	**BG05-../D04LA4**	5.1	850	-
0.11	34	30.5	0.98	39.94	**BG05-../D04LA4**	5.1	860	-
0.11	31	33.5	0.9	43.57	**BG05-../D04LA4**	5.1	900	-
0.11	29	36	0.83	47.00	**BG05-../D04LA4**	5.1	930	-
0.11	18	40*	1.0	75.99	**BG06G04-../D04LA4**	8.4	1070	-
0.11	16.5	43*	1.0	82.89	**BG06G04-../D04LA4**	8.4	1070	-
0.11	15	45*	1.0	93.00	**BG06G04-../D04LA4**	8.4	1070	-
0.11	13.5	45*	1.0	101.5	**BG06G04-../D04LA4**	8.4	1070	-
0.11	11.5	45*	1.0	122.0	**BG06G04-../D04LA4**	8.4	1070	-
0.11	9.1	45*	1.0	149.0	**BG06G04-../D04LA4**	8.4	1070	-
0.11	7.3	45*	1.0	185.4	**BG06G04-../D04LA4**	8.4	1070	-
0.11	5.4	45*	1.0	250.2	**BG06G04-../D04LA4**	8.4	1070	-
0.11	5.0	45*	1.0	275.2	**BG06G04-../D04LA4**	8.4	1070	-
0.11	4.1	45*	1.0	330.8	**BG06G04-../D04LA4**	8.4	1070	-
0.11	3.7	45*	1.0	367.0	**BG06G04-../D04LA4**	8.4	1070	-
0.11	3.0	45*	1.0	457.0	**BG06G04-../D04LA4**	8.4	1070	-
0.11	2.7	45*	1.0	502.6	**BG06G04-../D04LA4**	8.4	1070	-
0.11	2.3	45*	1.0	587.1	**BG06G04-../D04LA4**	8.4	1070	-
0.11	2.1	45*	1.0	645.8	**BG06G04-../D04LA4**	8.4	1070	-
0.11	1.9	45*	1.0	747.5	**BG06G04-../D04LA4**	8.4	1070	-
0.11	1.6	45*	1.0	859.3	**BG06G04-../D04LA4**	8.4	1070	-
0.11	1.5	45*	1.0	945.2	**BG06G04-../D04LA4**	8.4	1070	-
0.11	1.3	45*	1.0	1081	**BG06G04-../D04LA4**	8.4	1070	-
0.11	1.2	45*	1.0	1174	**BG06G04-../D04LA4**	8.4	1070	-
0.11	1.1	45*	1.0	1321	**BG06G04-../D04LA4**	8.4	1070	-
0.11	0.9	45*	1.0	1528	**BG06G04-../D04LA4**	8.4	1070	-
0.11	0.85	45*	1.0	1681	**BG06G04-../D04LA4**	8.4	1070	-
0.11	0.7	45*	1.0	1948	**BG06G04-../D04LA4**	8.4	1070	-
0.11	0.65	45*	1.0	2126	**BG06G04-../D04LA4**	8.4	1070	-
0.11	0.6	45*	1.0	2435	**BG06G04-../D04LA4**	8.4	1070	-
0.11	105	10	3.3	12.98	**BG06-../D04LA4**	6.1	600	-
0.11	92	11.4	3.0	14.78	**BG06-../D04LA4**	6.1	730	-
0.11	84	12.5	2.8	16.13	**BG06-../D04LA4**	6.1	740	-
0.11	78	13.4	2.8	17.40	**BG06-../D04LA4**	6.1	760	-
0.11	72	14.5	2.8	18.98	**BG06-../D04LA4**	6.1	770	-
0.11	65	16.1	2.5	20.82	**BG06-../D04LA4**	6.1	800	-
0.11	60	17.5	2.5	22.71	**BG06-../D04LA4**	6.1	810	-
0.11	53	19.8	2.3	25.48	**BG06-../D04LA4**	6.1	850	-
0.11	49	21	2.1	27.80	**BG06-../D04LA4**	6.1	840	-
0.11	42	25	1.8	32.22	**BG06-../D04LA4**	6.1	890	-
0.11	38.5	27	1.65	35.15	**BG06-../D04LA4**	6.1	880	-
0.11	37	28	1.6	36.91	**BG06-../D04LA4**	6.1	890	-
0.11	34	30.5	1.5	40.26	**BG06-../D04LA4**	6.1	890	-
0.11	29.5	35.5	1.25	46.19	**BG06-../D04LA4**	6.1	890	-
0.11	27	38.5	1.15	50.38	**BG06-../D04LA4**	6.1	940	-
0.11	26	40	1.15	52.56	**BG06-../D04LA4**	6.1	950	-
0.11	24	43.5	1.05	57.34	**BG06-../D04LA4**	6.1	1000	-
0.11	22.5	46.5	0.97	61.22	**BG06-../D04LA4**	6.1	1020	-
0.11	20.5	51	0.88	66.79	**BG06-../D04LA4**	6.1	1070	-
0.11	20	52	2.0	67.54	**BG10Z-../D04LA4**	11	2000	2800
0.11	17.5	60	2.0	77.40	**BG10Z-../D04LA4**	11	2000	2800
0.11	16	65	1.85	85.76	**BG10Z-../D04LA4**	11	2000	2800
0.11	15	70	1.7	92.19	**BG10Z-../D04LA4**	11	2000	2800
0.11	13.5	77	1.55	102.1	**BG10Z-../D04LA4**	11	2000	2800
0.11	12.5	84	1.45	109.8	**BG10Z-../D04LA4**	11	2000	2800
0.11	11.5	91	1.3	121.7	**BG10Z-../D04LA4**	11	2000	2800
0.11	10.5	100	1.2	131.8	**BG10Z-../D04LA4**	11	2000	2800
0.11	9.3	112	1.05	146.0	**BG10Z-../D04LA4**	11	2000	2800
0.11	8.2	128	0.94	166.0	**BG10Z-../D04LA4**	11	2000	2800
0.11	7.4	141	0.85	184.0	**BG10Z-../D04LA4**	11	2000	2800
0.11	7.0	150	0.8	194.6	**BG10Z-../D04LA4**	11	2000	2800

0.11 kW

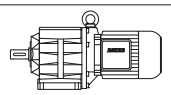

P_N	50 Hz			i	Type	m	F_{RN}	F_{RV}
	n_2	M_2	f_B					
[kW]	[1/min]	[Nm]	[—]	[:1]		[kg]	[N]	[N]
0.11	5.7	158	0.82	240.7	**BG10G06-../D04LA4**	14	2000	2800
0.11	4.9	130*	1.0	276.4	**BG10G06-../D04LA4**	14	2000	2800
0.11	4.1	130*	1.0	332.0	**BG10G06-../D04LA4**	14	2000	2800
0.11	3.6	130*	1.0	379.6	**BG10G06-../D04LA4**	14	2000	2800
0.11	3.1	130*	1.0	435.9	**BG10G06-../D04LA4**	14	2000	2800
0.11	2.7	130*	1.0	512.6	**BG10G06-../D04LA4**	14	2000	2800
0.11	2.3	130*	1.0	613.6	**BG10G06-../D04LA4**	14	2000	2800
0.11	1.9	130*	1.0	748.9	**BG10G06-../D04LA4**	14	2000	2800
0.11	1.6	130*	1.0	899.5	**BG10G06-../D04LA4**	14	2000	2800
0.11	1.3	130*	1.0	1081	**BG10G06-../D04LA4**	14	2000	2800
0.11	1.1	130*	1.0	1272	**BG10G06-../D04LA4**	14	2000	2800
0.11	0.9	130*	1.0	1523	**BG10G06-../D04LA4**	14	2000	2800
0.11	0.75	130*	1.0	1863	**BG10G06-../D04LA4**	14	2000	2800
0.11	0.6	130*	1.0	2356	**BG10G06-../D04LA4**	14	2000	2800
0.11	0.55	130*	1.0	2699	**BG10G06-../D04LA4**	14	2000	2800
0.11	0.46	130*	1.0	2944	**BG10G06-../D04LA4**	14	2000	2800
0.11	0.4	130*	1.0	3378	**BG10G06-../D04LA4**	14	2000	2800
0.11	0.37	130*	1.0	3684	**BG10G06-../D04LA4**	14	2000	2800
0.11	0.31	130*	1.0	4477	**BG10G06-../D04LA4**	14	2000	2800
0.11	0.28	130*	1.0	4884	**BG10G06-../D04LA4**	14	2000	2800
0.11	17.5	60	3.3	78.60	**BG20Z-../D04LA4**	13	5000	-
0.11	15.5	67	3.0	87.30	**BG20Z-../D04LA4**	13	5000	-
0.11	14.5	72	2.8	94.27	**BG20Z-../D04LA4**	13	5000	-
0.11	13	80	2.5	104.7	**BG20Z-../D04LA4**	13	5000	-
0.11	12	87	2.3	112.8	**BG20Z-../D04LA4**	13	5000	-
0.11	11	95	2.1	125.3	**BG20Z-../D04LA4**	13	5000	-
0.11	9.6	109	1.85	141.3	**BG20Z-../D04LA4**	13	5000	-
0.11	8.4	125	1.6	162.2	**BG20Z-../D04LA4**	13	5000	-
0.11	7.5	140	1.45	180.1	**BG20Z-../D04LA4**	13	5000	-
0.11	6.8	154	1.3	199.9	**BG20Z-../D04LA4**	13	5000	-
0.11	6.1	172	1.15	222.1	**BG20Z-../D04LA4**	13	5000	-
0.11	5.5	164	1.35	248.0	**BG20G06-../D04LA4**	17	5000	2100
0.11	4.6	199	1.1	297.9	**BG20G06-../D04LA4**	17	5000	2100
0.11	3.9	240	0.92	352.1	**BG20G06-../D04LA4**	17	5000	2100
0.11	3.5	265	0.83	391.1	**BG20G06-../D04LA4**	17	5000	2100
0.11	3.0	220*	1.0	460.0	**BG20G06-../D04LA4**	17	5000	2100
0.11	2.5	220*	1.0	550.6	**BG20G06-../D04LA4**	17	5000	2100
0.11	2.1	220*	1.0	671.9	**BG20G06-../D04LA4**	17	5000	2100
0.11	1.7	220*	1.0	807.1	**BG20G06-../D04LA4**	17	5000	2100
0.11	1.4	220*	1.0	969.9	**BG20G06-../D04LA4**	17	5000	2100
0.11	1.2	220*	1.0	1142	**BG20G06-../D04LA4**	17	5000	2100
0.11	1.0	220*	1.0	1366	**BG20G06-../D04LA4**	17	5000	2100
0.11	0.85	220*	1.0	1672	**BG20G06-../D04LA4**	17	5000	2100
0.11	0.75	220*	1.0	1824	**BG20G06-../D04LA4**	17	5000	2100
0.11	0.65	220*	1.0	2114	**BG20G06-../D04LA4**	17	5000	2100
0.11	0.6	220*	1.0	2422	**BG20G06-../D04LA4**	17	5000	2100
0.11	0.55	220*	1.0	2642	**BG20G06-../D04LA4**	17	5000	2100
0.11	0.45	220*	1.0	3031	**BG20G06-../D04LA4**	17	5000	2100
0.11	0.41	220*	1.0	3306	**BG20G06-../D04LA4**	17	5000	2100
0.11	0.34	220*	1.0	4017	**BG20G06-../D04LA4**	17	5000	2100
0.11	0.31	220*	1.0	4383	**BG20G06-../D04LA4**	17	5000	2100
0.11	5.3	171	1.9	254.9	**BG30G06-../D04LA4**	21	6000	-
0.11	4.5	200	1.65	306.2	**BG30G06-../D04LA4**	21	6000	-
0.11	3.9	240	1.35	346.8	**BG30G06-../D04LA4**	21	6000	-
0.11	3.4	275	1.2	401.9	**BG30G06-../D04LA4**	21	6000	-
0.11	2.9	325	1.0	472.8	**BG30G06-../D04LA4**	21	6000	-
0.11	2.4	395	0.82	565.8	**BG30G06-../D04LA4**	21	6000	-
0.11	2.0	325*	1.0	690.6	**BG30G06-../D04LA4**	21	6000	-
0.11	1.8	325*	1.0	760.7	**BG30G06-../D04LA4**	21	6000	-
0.11	1.7	325*	1.0	829.5	**BG30G06-../D04LA4**	21	6000	-
0.11	1.4	325*	1.0	996.8	**BG30G06-../D04LA4**	21	6000	-
0.11	1.3	325*	1.0	1088	**BG30G06-../D04LA4**	21	6000	-
0.11	1.1	325*	1.0	1280	**BG30G06-../D04LA4**	21	6000	-
0.11	1.0	325*	1.0	1404	**BG30G06-../D04LA4**	21	6000	-
0.11	0.8	325*	1.0	1718	**BG30G06-../D04LA4**	21	6000	-
0.11	0.75	325*	1.0	1875	**BG30G06-../D04LA4**	21	6000	-
0.11	0.65	325*	1.0	2173	**BG30G06-../D04LA4**	21	6000	-
0.11	0.5	325*	1.0	2715	**BG30G06-../D04LA4**	21	6000	-

0.11 kW

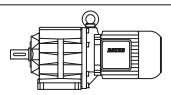

P_N	50 Hz			i	Type	m	F_{RN}	F_{RV}
	n_2	M_2	f_B					
[kW]	[1/min]	[Nm]	[—]	[:1]		[kg]	[N]	[N]
0.11	0.44	325*	1.0	3115	**BG30G06-../D04LA4**	21	6000	-
0.11	0.4	325*	1.0	3398	**BG30G06-../D04LA4**	21	6000	-
0.11	0.35	325*	1.0	3867	**BG30G06-../D04LA4**	21	6000	-
0.11	0.3	325*	1.0	4504	**BG30G06-../D04LA4**	21	6000	-

0.12 kW

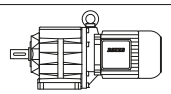

P_N	50 Hz			i	Type	m	F_{RN}	F_{RV}
	n_2	M_2	f_B					
[kW]	[1/min]	[Nm]	[—]	[:1]		[kg]	[N]	[N]
0.12	540	2.1	4.3	2.64	**BG05-../DPE05LA4**	7.0	420	-
0.12	420	2.7	3.7	3.38	**BG05-../DPE05LA4**	7.0	460	-
0.12	310	3.65	3.3	4.59	**BG05-../DPE05LA4**	7.0	490	-
0.12	260	4.4	3.2	5.46	**BG05-../DPE05LA4**	7.0	490	-
0.12	235	4.85	3.5	6.09	**BG05-../DPE05LA4**	7.0	480	-
0.12	215	5.3	3.2	6.64	**BG05-../DPE05LA4**	7.0	500	-
0.12	181	6.3	2.9	7.80	**BG05-../DPE05LA4**	7.0	530	-
0.12	173	6.6	2.7	8.15	**BG05-../DPE05LA4**	7.0	510	-
0.12	166	6.9	2.8	8.51	**BG05-../DPE05LA4**	7.0	550	-
0.12	136	8.4	2.3	10.40	**BG05-../DPE05LA4**	7.0	510	-
0.12	133	8.6	2.3	10.59	**BG05-../DPE05LA4**	7.0	590	-
0.12	122	9.3	2.3	11.55	**BG05-../DPE05LA4**	7.0	600	-
0.12	117	9.7	2.2	12.05	**BG05-../DPE05LA4**	7.0	510	-
0.12	112	10.2	2.2	12.60	**BG05-../DPE05LA4**	7.0	610	-
0.12	103	11.1	2.1	13.75	**BG05-../DPE05LA4**	7.0	630	-
0.12	93	12.3	1.95	15.23	**BG05-../DPE05LA4**	7.0	640	-
0.12	85	13.4	1.85	16.62	**BG05-../DPE05LA4**	7.0	660	-
0.12	75	15.2	1.7	18.82	**BG05-../DPE05LA4**	7.0	680	-
0.12	69	16.6	1.65	20.53	**BG05-../DPE05LA4**	7.0	700	-
0.12	59	19.4	1.45	24.00	**BG05-../DPE05LA4**	7.0	740	-
0.12	54	21	1.4	26.18	**BG05-../DPE05LA4**	7.0	760	-
0.12	51	22	1.35	27.82	**BG05-../DPE05LA4**	7.0	770	-
0.12	46.5	24.5	1.2	30.35	**BG05-../DPE05LA4**	7.0	760	-
0.12	40.5	28	1.05	35.00	**BG05-../DPE05LA4**	7.0	810	-
0.12	37	30.5	0.98	38.18	**BG05-../DPE05LA4**	7.0	850	-
0.12	35.5	32	0.94	39.94	**BG05-../DPE05LA4**	7.0	860	-
0.12	32.5	35	0.86	43.57	**BG05-../DPE05LA4**	7.0	900	-
0.12	115	9.9	3.3	12.30	**BG06-../DPE05LA4**	8.0	670	-
0.12	109	10.5	3.1	12.98	**BG06-../DPE05LA4**	8.0	600	-
0.12	96	11.9	2.9	14.78	**BG06-../DPE05LA4**	8.0	730	-
0.12	88	13	2.7	16.13	**BG06-../DPE05LA4**	8.0	740	-
0.12	81	14.1	2.7	17.40	**BG06-../DPE05LA4**	8.0	760	-
0.12	75	15.2	2.6	18.98	**BG06-../DPE05LA4**	8.0	770	-
0.12	68	16.8	2.4	20.82	**BG06-../DPE05LA4**	8.0	800	-
0.12	62	18.4	2.3	22.71	**BG06-../DPE05LA4**	8.0	810	-
0.12	56	20	2.3	25.48	**BG06-../DPE05LA4**	8.0	850	-
0.12	51	22	2.0	27.80	**BG06-../DPE05LA4**	8.0	840	-
0.12	44	26	1.75	32.22	**BG06-../DPE05LA4**	8.0	890	-
0.12	40	28.5	1.6	35.15	**BG06-../DPE05LA4**	8.0	880	-
0.12	38.5	29.5	1.55	36.91	**BG06-../DPE05LA4**	8.0	890	-
0.12	35	32.5	1.4	40.26	**BG06-../DPE05LA4**	8.0	890	-
0.12	30.5	37.5	1.2	46.19	**BG06-../DPE05LA4**	8.0	890	-
0.12	28	40.5	1.1	50.38	**BG06-../DPE05LA4**	8.0	940	-
0.12	27	42	1.05	52.56	**BG06-../DPE05LA4**	8.0	950	-
0.12	25	45.5	0.99	57.34	**BG06-../DPE05LA4**	8.0	1000	-
0.12	23	49.5	0.91	61.22	**BG06-../DPE05LA4**	8.0	1020	-
0.12	21.5	53	0.85	66.79	**BG06-../DPE05LA4**	8.0	1070	-
0.12	30.5	37.5	3.2	46.55	**BG10-../DPE06LA4**	13	1920	2650
0.12	27.5	41.5	2.9	51.57	**BG10-../DPE06LA4**	13	2000	2800
0.12	24.5	46.5	2.6	57.48	**BG10-../DPE06LA4**	13	2000	2800
0.12	21.5	53	2.3	66.00	**BG10-../DPE06LA4**	13	2000	2800
0.12	19.5	58	2.1	73.13	**BG10-../DPE06LA4**	13	2000	2800
0.12	18.5	61	1.95	77.40	**BG10Z-../DPE06LA4**	14	2000	2800
0.12	16.5	69	1.75	85.76	**BG10Z-../DPE06LA4**	14	2000	2800
0.12	15.5	73	1.65	92.19	**BG10Z-../DPE06LA4**	14	2000	2800

0.12 kW

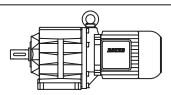

P_N	50 Hz			i	Type	m	F_{RN}	F_{RV}
	n_2	M_2	f_B					
[kW]	[1/min]	[Nm]	[—]	[:1]		[kg]	[N]	[N]
0.12	14	81	1.5	102.1	**BG10Z-../DPE06LA4**	14	2000	2800
0.12	13	88	1.35	109.8	**BG10Z-../DPE06LA4**	14	2000	2800
0.12	12	95	1.25	121.7	**BG10Z-../DPE06LA4**	14	2000	2800
0.12	11	104	1.15	131.8	**BG10Z-../DPE06LA4**	14	2000	2800
0.12	9.6	119	1.0	146.0	**BG10Z-../DPE06LA4**	14	2000	2800
0.12	8.5	134	0.9	166.0	**BG10Z-../DPE06LA4**	14	2000	2800
0.12	7.7	148	0.81	184.0	**BG10Z-../DPE06LA4**	14	2000	2800
0.12	7.2	138	0.94	194.9	**BG10G06-../DPE06LA4**	18	2000	2800
0.12	5.9	130*	1.0	240.7	**BG10G06-../DPE06LA4**	18	2000	2800
0.12	5.1	130*	1.0	276.4	**BG10G06-../DPE06LA4**	18	2000	2800
0.12	4.3	130*	1.0	332.0	**BG10G06-../DPE06LA4**	18	2000	2800
0.12	3.7	130*	1.0	379.6	**BG10G06-../DPE06LA4**	18	2000	2800
0.12	3.3	130*	1.0	435.9	**BG10G06-../DPE06LA4**	18	2000	2800
0.12	2.8	130*	1.0	512.6	**BG10G06-../DPE06LA4**	18	2000	2800
0.12	2.3	130*	1.0	613.6	**BG10G06-../DPE06LA4**	18	2000	2800
0.12	1.9	130*	1.0	748.9	**BG10G06-../DPE06LA4**	18	2000	2800
0.12	1.6	130*	1.0	899.5	**BG10G06-../DPE06LA4**	18	2000	2800
0.12	1.3	130*	1.0	1081	**BG10G06-../DPE06LA4**	18	2000	2800
0.12	1.2	130*	1.0	1272	**BG10G06-../DPE06LA4**	18	2000	2800
0.12	0.95	130*	1.0	1523	**BG10G06-../DPE06LA4**	18	2000	2800
0.12	0.8	130*	1.0	1863	**BG10G06-../DPE06LA4**	18	2000	2800
0.12	0.6	130*	1.0	2356	**BG10G06-../DPE06LA4**	18	2000	2800
0.12	0.55	130*	1.0	2699	**BG10G06-../DPE06LA4**	18	2000	2800
0.12	0.48	130*	1.0	2944	**BG10G06-../DPE06LA4**	18	2000	2800
0.12	0.42	130*	1.0	3378	**BG10G06-../DPE06LA4**	18	2000	2800
0.12	0.39	130*	1.0	3684	**BG10G06-../DPE06LA4**	18	2000	2800
0.12	0.32	130*	1.0	4477	**BG10G06-../DPE06LA4**	18	2000	2800
0.12	0.29	130*	1.0	4884	**BG10G06-../DPE06LA4**	18	2000	2800
0.12	19	60	3.3	75.00	**BG20Z-../DPE06LA4**	16	5000	-
0.12	18	63	3.2	78.60	**BG20Z-../DPE06LA4**	16	5000	-
0.12	16.5	69	2.9	87.30	**BG20Z-../DPE06LA4**	16	5000	-
0.12	15	76	2.6	94.27	**BG20Z-../DPE06LA4**	16	5000	-
0.12	13.5	84	2.4	104.7	**BG20Z-../DPE06LA4**	16	5000	-
0.12	12.5	91	2.2	112.8	**BG20Z-../DPE06LA4**	16	5000	-
0.12	11.5	99	2.0	125.3	**BG20Z-../DPE06LA4**	16	5000	-
0.12	10	114	1.75	141.3	**BG20Z-../DPE06LA4**	16	5000	-
0.12	8.7	131	1.55	162.2	**BG20Z-../DPE06LA4**	16	5000	-
0.12	7.8	146	1.35	180.1	**BG20Z-../DPE06LA4**	16	5000	-
0.12	7.1	161	1.25	199.9	**BG20Z-../DPE06LA4**	16	5000	-
0.12	6.4	179	1.1	222.1	**BG20Z-../DPE06LA4**	16	5000	-
0.12	5.7	174	1.25	248.0	**BG20G06-../DPE06LA4**	20	5000	2100
0.12	4.7	210	1.05	297.9	**BG20G06-../DPE06LA4**	20	5000	2100
0.12	4.0	255	0.86	352.1	**BG20G06-../DPE06LA4**	20	5000	2100
0.12	3.6	220*	1.0	391.1	**BG20G06-../DPE06LA4**	20	5000	2100
0.12	3.1	220*	1.0	460.0	**BG20G06-../DPE06LA4**	20	5000	2100
0.12	2.6	220*	1.0	550.6	**BG20G06-../DPE06LA4**	20	5000	2100
0.12	2.1	220*	1.0	671.9	**BG20G06-../DPE06LA4**	20	5000	2100
0.12	1.8	220*	1.0	807.1	**BG20G06-../DPE06LA4**	20	5000	2100
0.12	1.5	220*	1.0	969.9	**BG20G06-../DPE06LA4**	20	5000	2100
0.12	1.3	220*	1.0	1142	**BG20G06-../DPE06LA4**	20	5000	2100
0.12	1.1	220*	1.0	1366	**BG20G06-../DPE06LA4**	20	5000	2100
0.12	0.85	220*	1.0	1672	**BG20G06-../DPE06LA4**	20	5000	2100
0.12	0.8	220*	1.0	1824	**BG20G06-../DPE06LA4**	20	5000	2100
0.12	0.7	220*	1.0	2114	**BG20G06-../DPE06LA4**	20	5000	2100
0.12	0.6	220*	1.0	2422	**BG20G06-../DPE06LA4**	20	5000	2100
0.12	0.55	220*	1.0	2642	**BG20G06-../DPE06LA4**	20	5000	2100
0.12	0.47	220*	1.0	3031	**BG20G06-../DPE06LA4**	20	5000	2100
0.12	0.43	220*	1.0	3306	**BG20G06-../DPE06LA4**	20	5000	2100
0.12	0.35	220*	1.0	4017	**BG20G06-../DPE06LA4**	20	5000	2100
0.12	0.32	220*	1.0	4383	**BG20G06-../DPE06LA4**	20	5000	2100
0.12	12	95	3.2	121.6	**BG30Z-../DPE06LA4**	22	6000	-
0.12	11	104	2.9	128.5	**BG30Z-../DPE06LA4**	22	6000	-
0.12	9.9	115	2.6	142.5	**BG30Z-../DPE06LA4**	22	6000	-
0.12	9.3	123	2.4	151.5	**BG30Z-../DPE06LA4**	22	6000	-
0.12	8.4	136	2.2	168.1	**BG30Z-../DPE06LA4**	22	6000	-
0.12	7.7	148	2.0	182.9	**BG30Z-../DPE06LA4**	22	6000	-
0.12	6.9	166	1.8	202.9	**BG30Z-../DPE06LA4**	22	6000	-
0.12	6.2	184	1.65	225.9	**BG30Z-../DPE06LA4**	22	6000	-

0.12 kW

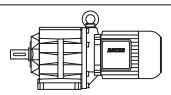

P_N	50 Hz			i	Type	m	F_{RN}	F_{RV}
	n_2	M_2	f_B					
[kW]	[1/min]	[Nm]	[—]	[:1]		[kg]	[N]	[N]
0.12	5.4	210	1.45	261.9	**BG30Z-../DPE06LA4**	22	6000	-
0.12	4.9	230	1.3	290.5	**BG30Z-../DPE06LA4**	22	6000	-
0.12	4.6	215	1.5	306.2	**BG30G06-../DPE06LA4**	25	6000	-
0.12	4.1	250	1.3	346.8	**BG30G06-../DPE06LA4**	25	6000	-
0.12	3.5	295	1.1	401.9	**BG30G06-../DPE06LA4**	25	6000	-
0.12	3.0	345	0.94	472.8	**BG30G06-../DPE06LA4**	25	6000	-
0.12	2.5	325*	1.0	565.8	**BG30G06-../DPE06LA4**	25	6000	-
0.12	2.1	325*	1.0	690.6	**BG30G06-../DPE06LA4**	25	6000	-
0.12	1.9	325*	1.0	760.7	**BG30G06-../DPE06LA4**	25	6000	-
0.12	1.7	325*	1.0	829.5	**BG30G06-../DPE06LA4**	25	6000	-
0.12	1.5	325*	1.0	996.8	**BG30G06-../DPE06LA4**	25	6000	-
0.12	1.3	325*	1.0	1088	**BG30G06-../DPE06LA4**	25	6000	-
0.12	1.1	325*	1.0	1280	**BG30G06-../DPE06LA4**	25	6000	-
0.12	1.0	325*	1.0	1404	**BG30G06-../DPE06LA4**	25	6000	-
0.12	0.85	325*	1.0	1718	**BG30G06-../DPE06LA4**	25	6000	-
0.12	0.75	325*	1.0	1875	**BG30G06-../DPE06LA4**	25	6000	-
0.12	0.65	325*	1.0	2173	**BG30G06-../DPE06LA4**	25	6000	-
0.12	0.55	325*	1.0	2715	**BG30G06-../DPE06LA4**	25	6000	-
0.12	0.45	325*	1.0	3115	**BG30G06-../DPE06LA4**	25	6000	-
0.12	0.42	325*	1.0	3398	**BG30G06-../DPE06LA4**	25	6000	-
0.12	0.37	325*	1.0	3867	**BG30G06-../DPE06LA4**	25	6000	-
0.12	0.32	325*	1.0	4504	**BG30G06-../DPE06LA4**	25	6000	-
0.12	9.0	127	3.3	156.9	**BG40Z-../DPE06LA4**	38	7000	-
0.12	8.5	134	3.2	166.1	**BG40Z-../DPE06LA4**	38	7000	-
0.12	7.6	150	2.8	184.4	**BG40Z-../DPE06LA4**	38	7000	-
0.12	7.1	161	2.6	199.9	**BG40Z-../DPE06LA4**	38	7000	-
0.12	6.4	179	2.4	221.9	**BG40Z-../DPE06LA4**	38	7000	-
0.12	5.7	200	2.1	246.5	**BG40Z-../DPE06LA4**	38	7000	-
0.12	5.2	220	1.95	273.6	**BG40Z-../DPE06LA4**	38	7000	-
0.12	4.9	143	3.3	288.6	**BG40G10-../DPE06LA4**	43	7000	-
0.12	4.0	187	2.5	353.5	**BG40G10-../DPE06LA4**	43	7000	-
0.12	3.2	250	1.85	448.8	**BG40G10-../DPE06LA4**	43	7000	-
0.12	2.7	305	1.5	534.2	**BG40G10-../DPE06LA4**	43	7000	-
0.12	2.2	405	1.15	640.0	**BG40G10-../DPE06LA4**	43	7000	-
0.12	2.0	445	1.05	710.9	**BG40G10-../DPE06LA4**	43	7000	-
0.12	1.8	495	0.94	789.1	**BG40G10-../DPE06LA4**	43	7000	-
0.12	1.5	465*	1.0	965.2	**BG40G10-../DPE06LA4**	43	7000	-
0.12	1.2	465*	1.0	1225	**BG40G10-../DPE06LA4**	43	7000	-
0.12	1.0	465*	1.0	1459	**BG40G10-../DPE06LA4**	43	7000	-
0.12	0.85	465*	1.0	1738	**BG40G10-../DPE06LA4**	43	7000	-
0.12	0.7	465*	1.0	2087	**BG40G10-../DPE06LA4**	43	7000	-
0.12	0.55	465*	1.0	2628	**BG40G10-../DPE06LA4**	43	7000	-
0.12	0.46	465*	1.0	3082	**BG40G10-../DPE06LA4**	43	7000	-
0.12	0.37	465*	1.0	3805	**BG40G10-../DPE06LA4**	43	7000	-
0.12	0.34	465*	1.0	4216	**BG40G10-../DPE06LA4**	43	7000	-
0.12	0.29	465*	1.0	4841	**BG40G10-../DPE06LA4**	43	7000	-
0.12	5.5	205	3.1	258.6	**BG50Z-../DPE06LA4**	47	10000	-
0.12	4.9	230	2.7	286.7	**BG50Z-../DPE06LA4**	47	10000	-
0.12	3.2	250	2.8	446.5	**BG50G10-../DPE06LA4**	51	10000	-
0.12	2.7	305	2.3	531.5	**BG50G10-../DPE06LA4**	51	10000	-
0.12	2.3	385	1.8	621.3	**BG50G10-../DPE06LA4**	51	10000	-
0.12	2.0	445	1.55	708.3	**BG50G10-../DPE06LA4**	51	10000	-
0.12	1.8	495	1.4	785.1	**BG50G10-../DPE06LA4**	51	10000	-
0.12	1.5	610	1.15	960.2	**BG50G10-../DPE06LA4**	51	10000	-
0.12	1.2	790	0.87	1219	**BG50G10-../DPE06LA4**	51	10000	-
0.12	1.0	690*	1.0	1452	**BG50G10-../DPE06LA4**	51	10000	-
0.12	0.85	690*	1.0	1729	**BG50G10-../DPE06LA4**	51	10000	-
0.12	0.7	690*	1.0	2076	**BG50G10-../DPE06LA4**	51	10000	-
0.12	0.55	690*	1.0	2615	**BG50G10-../DPE06LA4**	51	10000	-
0.12	0.46	690*	1.0	3066	**BG50G10-../DPE06LA4**	51	10000	-
0.12	0.37	690*	1.0	3786	**BG50G10-../DPE06LA4**	51	10000	-
0.12	0.34	690*	1.0	4195	**BG50G10-../DPE06LA4**	51	10000	-
0.12	0.3	690*	1.0	4816	**BG50G10-../DPE06LA4**	51	10000	-
0.12	1.8	430	3.0	804.5	**BG60G20-../DPE06LA4**	100	16000	-
0.12	1.6	490	2.7	891.5	**BG60G20-../DPE06LA4**	100	16000	-
0.12	1.4	570	2.3	1051	**BG60G20-../DPE06LA4**	100	16000	-
0.12	1.2	700	1.85	1168	**BG60G20-../DPE06LA4**	100	16000	-

0.12 kW

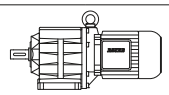

P_N	50 Hz			i	Type	m	F_{RN}	F_{RV}
	n_2	M_2	f_B					
[kW]	[1/min]	[Nm]	[—]	[:1]		[kg]	[N]	[N]
0.12	1.1	770	1.7	1346	**BG60G20-../DPE06LA4**	100	16000	-
0.12	0.95	930	1.4	1496	**BG60G20-../DPE06LA4**	100	16000	-
0.12	0.85	1070	1.2	1741	**BG60G20-../DPE06LA4**	100	16000	-
0.12	0.75	1250	1.05	1880	**BG60G20-../DPE06LA4**	100	16000	-
0.12	0.65	1300*	1.0	2249	**BG60G20-../DPE06LA4**	100	16000	-
0.12	0.5	1300*	1.0	2818	**BG60G20-../DPE06LA4**	100	16000	-
0.12	0.44	1300*	1.0	3234	**BG60G20-../DPE06LA4**	100	16000	-
0.12	0.39	1300*	1.0	3592	**BG60G20-../DPE06LA4**	100	16000	-
0.12	0.32	1300*	1.0	4429	**BG60G20-../DPE06LA4**	100	16000	-
0.12	1.1	800	3.1	1389	**BG70G20-../DPE06LA4**	130	20000	-
0.12	0.95	960	2.6	1543	**BG70G20-../DPE06LA4**	130	20000	-
0.12	0.85	1100	2.3	1666	**BG70G20-../DPE06LA4**	130	20000	-
0.12	0.75	1280	1.95	1994	**BG70G20-../DPE06LA4**	130	20000	-
0.12	0.65	1520	1.65	2215	**BG70G20-../DPE06LA4**	130	20000	-
0.12	0.55	1840	1.35	2774	**BG70G20-../DPE06LA4**	130	20000	-
0.12	0.44	2350	1.05	3184	**BG70G20-../DPE06LA4**	130	20000	-
0.12	0.36	2500*	1.0	3925	**BG70G20-../DPE06LA4**	130	20000	-

0.18 kW

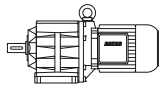

P_N	50 Hz			i	Type	m	F_{RN}	F_{RV}
	n_2	M_2	f_B					
[kW]	[1/min]	[Nm]	[—]	[:1]		[kg]	[N]	[N]
0.18	540	3.15	2.9	2.64	**BG05-../DPE07LA4**	11	420	-
0.18	415	4.1	2.4	3.38	**BG05-../DPE07LA4**	11	460	-
0.18	310	5.5	2.2	4.59	**BG05-../DPE07LA4**	11	490	-
0.18	260	6.6	2.1	5.46	**BG05-../DPE07LA4**	11	490	-
0.18	230	7.4	2.3	6.09	**BG05-../DPE07LA4**	11	480	-
0.18	215	7.9	2.2	6.64	**BG05-../DPE07LA4**	11	500	-
0.18	180	9.5	1.9	7.80	**BG05-../DPE07LA4**	11	530	-
0.18	172	9.9	1.8	8.15	**BG05-../DPE07LA4**	11	510	-
0.18	165	10.4	1.85	8.51	**BG05-../DPE07LA4**	11	550	-
0.18	133	12.9	1.55	10.59	**BG05-../DPE07LA4**	11	590	-
0.18	122	14	1.5	11.55	**BG05-../DPE07LA4**	11	600	-
0.18	117	14.6	1.45	12.05	**BG05-../DPE07LA4**	11	510	-
0.18	112	15.3	1.45	12.60	**BG05-../DPE07LA4**	11	610	-
0.18	102	16.8	1.35	13.75	**BG05-../DPE07LA4**	11	630	-
0.18	92	18.6	1.3	15.23	**BG05-../DPE07LA4**	11	640	-
0.18	85	20	1.25	16.62	**BG05-../DPE07LA4**	11	660	-
0.18	75	22.5	1.15	18.82	**BG05-../DPE07LA4**	11	680	-
0.18	69	24.5	1.1	20.53	**BG05-../DPE07LA4**	11	700	-
0.18	59	29	0.97	24.00	**BG05-../DPE07LA4**	11	740	-
0.18	54	31.5	0.92	26.18	**BG05-../DPE07LA4**	11	760	-
0.18	51	33.5	0.9	27.82	**BG05-../DPE07LA4**	11	770	-
0.18	46.5	36.5	0.82	30.35	**BG05-../DPE07LA4**	11	760	-
0.18	235	7.3	3.3	5.96	**BG06-../DPE07LA4**	12	570	-
0.18	200	8.5	3.1	7.01	**BG06-../DPE07LA4**	12	580	-
0.18	167	10.2	2.7	8.39	**BG06-../DPE07LA4**	12	600	-
0.18	150	11.4	2.6	9.38	**BG06-../DPE07LA4**	12	640	-
0.18	137	12.5	2.5	10.24	**BG06-../DPE07LA4**	12	640	-
0.18	125	13.7	2.3	11.28	**BG06-../DPE07LA4**	12	670	-
0.18	114	15	2.2	12.30	**BG06-../DPE07LA4**	12	670	-
0.18	108	15.9	2.1	12.98	**BG06-../DPE07LA4**	12	600	-
0.18	95	18	1.9	14.78	**BG06-../DPE07LA4**	12	730	-
0.18	87	19.7	1.8	16.13	**BG06-../DPE07LA4**	12	740	-
0.18	81	21	1.8	17.40	**BG06-../DPE07LA4**	12	760	-
0.18	74	23	1.75	18.98	**BG06-../DPE07LA4**	12	770	-
0.18	68	25	1.6	20.82	**BG06-../DPE07LA4**	12	800	-
0.18	62	27.5	1.55	22.71	**BG06-../DPE07LA4**	12	810	-
0.18	55	31	1.45	25.48	**BG06-../DPE07LA4**	12	850	-
0.18	51	33.5	1.35	27.80	**BG06-../DPE07LA4**	12	840	-
0.18	43.5	39.5	1.15	32.22	**BG06-../DPE07LA4**	12	890	-
0.18	40	42.5	1.05	35.15	**BG06-../DPE07LA4**	12	880	-
0.18	38	45	1.0	36.91	**BG06-../DPE07LA4**	12	890	-
0.18	35	49	0.92	40.26	**BG06-../DPE07LA4**	12	890	-

0.18 kW

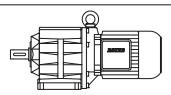

P_N	50 Hz			i	Type	m	F_{RN}	F_{RV}
	n_2	M_2	f_B					
[kW]	[1/min]	[Nm]	[—]	[:1]		[kg]	[N]	[N]
0.18	30.5	56	0.8	46.19	**BG06-../DPE07LA4**	12	890	-
0.18	44.5	38.5	3.1	31.52	**BG10-../DPE07LA4**	15	1600	2200
0.18	40.5	42	2.9	34.92	**BG10-../DPE07LA4**	15	1690	2350
0.18	35.5	48	2.5	39.70	**BG10-../DPE07LA4**	15	1780	2450
0.18	32	53	2.3	43.99	**BG10-../DPE07LA4**	15	1880	2600
0.18	30.5	56	2.1	46.55	**BG10-../DPE07LA4**	15	1920	2650
0.18	27.5	62	1.95	51.57	**BG10-../DPE07LA4**	15	2000	2800
0.18	24.5	70	1.7	57.48	**BG10-../DPE07LA4**	15	2000	2800
0.18	21.5	79	1.5	66.00	**BG10-../DPE07LA4**	15	2000	2800
0.18	19.5	88	1.35	73.13	**BG10-../DPE07LA4**	15	2000	2800
0.18	18.5	92	1.3	77.40	**BG10Z-../DPE07LA4**	16	2000	2800
0.18	16.5	104	1.15	85.76	**BG10Z-../DPE07LA4**	16	2000	2800
0.18	15.5	110	1.1	92.19	**BG10Z-../DPE07LA4**	16	2000	2800
0.18	14	122	0.98	102.1	**BG10Z-../DPE07LA4**	16	2000	2800
0.18	13	132	0.91	109.8	**BG10Z-../DPE07LA4**	16	2000	2800
0.18	12	143	0.84	121.7	**BG10Z-../DPE07LA4**	16	2000	2800
0.18	37	46	3.3	37.90	**BG15-../DPE07LA4**	15	3000	6000
0.18	26.5	64	3.1	53.22	**BG20-../DPE07LA4**	18	4950	-
0.18	24	71	2.8	59.07	**BG20-../DPE07LA4**	18	5000	-
0.18	21.5	79	2.5	65.62	**BG20-../DPE07LA4**	18	5000	-
0.18	21	81	2.5	67.53	**BG20Z-../DPE07LA4**	19	5000	-
0.18	19	90	2.2	75.00	**BG20Z-../DPE07LA4**	19	5000	-
0.18	18	95	2.1	78.60	**BG20Z-../DPE07LA4**	19	5000	-
0.18	16.5	104	1.9	87.30	**BG20Z-../DPE07LA4**	19	5000	-
0.18	15	114	1.75	94.27	**BG20Z-../DPE07LA4**	19	5000	-
0.18	13.5	127	1.55	104.7	**BG20Z-../DPE07LA4**	19	5000	-
0.18	12.5	137	1.45	112.8	**BG20Z-../DPE07LA4**	19	5000	-
0.18	11.5	149	1.35	125.3	**BG20Z-../DPE07LA4**	19	5000	-
0.18	10	171	1.15	141.3	**BG20Z-../DPE07LA4**	19	5000	-
0.18	8.7	197	1.0	162.2	**BG20Z-../DPE07LA4**	19	5000	-
0.18	7.8	220	0.91	180.1	**BG20Z-../DPE07LA4**	19	5000	-
0.18	7.1	240	0.83	199.9	**BG20Z-../DPE07LA4**	19	5000	-
0.18	5.7	275	0.8	248.0	**BG20G06-../DPE07LA4**	23	5000	2100
0.18	17.5	98	3.1	81.55	**BG30Z-../DPE07LA4**	25	6000	-
0.18	16.5	104	2.9	86.13	**BG30Z-../DPE07LA4**	25	6000	-
0.18	15	114	2.6	95.55	**BG30Z-../DPE07LA4**	25	6000	-
0.18	13	132	2.3	109.6	**BG30Z-../DPE07LA4**	25	6000	-
0.18	12	143	2.1	121.6	**BG30Z-../DPE07LA4**	25	6000	-
0.18	11	156	1.9	128.5	**BG30Z-../DPE07LA4**	25	6000	-
0.18	9.9	173	1.75	142.5	**BG30Z-../DPE07LA4**	25	6000	-
0.18	9.3	184	1.65	151.5	**BG30Z-../DPE07LA4**	25	6000	-
0.18	8.4	200	1.5	168.1	**BG30Z-../DPE07LA4**	25	6000	-
0.18	7.7	220	1.35	182.9	**BG30Z-../DPE07LA4**	25	6000	-
0.18	6.9	245	1.2	202.9	**BG30Z-../DPE07LA4**	25	6000	-
0.18	6.2	275	1.1	225.9	**BG30Z-../DPE07LA4**	25	6000	-
0.18	5.4	315	0.95	261.9	**BG30Z-../DPE07LA4**	25	6000	-
0.18	4.9	350	0.86	290.5	**BG30Z-../DPE07LA4**	25	6000	-
0.18	4.6	340	0.96	306.2	**BG30G06-../DPE07LA4**	27	6000	-
0.18	4.1	390	0.83	346.8	**BG30G06-../DPE07LA4**	27	6000	-
0.18	13.5	127	3.3	107.5	**BG40Z-../DPE07LA4**	40	7000	-
0.18	12	143	3.0	121.3	**BG40Z-../DPE07LA4**	40	7000	-
0.18	10.5	163	2.6	134.6	**BG40Z-../DPE07LA4**	40	7000	-
0.18	10	171	2.5	141.4	**BG40Z-../DPE07LA4**	40	7000	-
0.18	9.0	191	2.2	156.9	**BG40Z-../DPE07LA4**	40	7000	-
0.18	8.5	200	2.1	166.1	**BG40Z-../DPE07LA4**	40	7000	-
0.18	7.6	225	1.9	184.4	**BG40Z-../DPE07LA4**	40	7000	-
0.18	7.1	240	1.75	199.9	**BG40Z-../DPE07LA4**	40	7000	-
0.18	6.4	265	1.6	221.9	**BG40Z-../DPE07LA4**	40	7000	-
0.18	5.7	300	1.4	246.5	**BG40Z-../DPE07LA4**	40	7000	-
0.18	5.2	330	1.3	273.6	**BG40Z-../DPE07LA4**	40	7000	-
0.18	4.9	260	1.8	288.6	**BG40G10-../DPE07LA4**	46	7000	-
0.18	4.0	330	1.4	353.5	**BG40G10-../DPE07LA4**	46	7000	-
0.18	3.2	425	1.1	448.8	**BG40G10-../DPE07LA4**	46	7000	-
0.18	2.7	520	0.89	534.2	**BG40G10-../DPE07LA4**	46	7000	-

0.18 kW

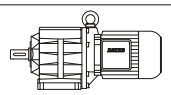

P_N	50 Hz			i	Type	m	F_{RN}	F_{RV}
	n_2	M_2	f_B					
[kW]	[1/min]	[Nm]	[—]	[:1]		[kg]	[N]	[N]
0.18	8.5	200	3.2	164.9	**BG50Z-../DPE07LA4**	50	10000	-
0.18	7.7	220	2.9	182.8	**BG50Z-../DPE07LA4**	50	10000	-
0.18	6.9	245	2.6	204.7	**BG50Z-../DPE07LA4**	50	10000	-
0.18	6.2	275	2.3	226.9	**BG50Z-../DPE07LA4**	50	10000	-
0.18	5.5	310	2.0	258.6	**BG50Z-../DPE07LA4**	50	10000	-
0.18	4.9	350	1.8	286.7	**BG50Z-../DPE07LA4**	50	10000	-
0.18	4.0	330	2.1	351.7	**BG50G10-../DPE07LA4**	54	10000	-
0.18	3.2	430	1.6	446.5	**BG50G10-../DPE07LA4**	54	10000	-
0.18	2.7	520	1.35	531.5	**BG50G10-../DPE07LA4**	54	10000	-
0.18	2.3	630	1.1	621.3	**BG50G10-../DPE07LA4**	54	10000	-
0.18	2.0	730	0.95	708.3	**BG50G10-../DPE07LA4**	54	10000	-
0.18	1.8	810	0.85	785.1	**BG50G10-../DPE07LA4**	54	10000	-
0.18	2.8	465	2.8	504.9	**BG60G20-../DPE07LA4**	102	16000	-
0.18	2.6	495	2.6	559.5	**BG60G20-../DPE07LA4**	102	16000	-
0.18	2.2	610	2.1	651.3	**BG60G20-../DPE07LA4**	102	16000	-
0.18	1.8	750	1.75	804.5	**BG60G20-../DPE07LA4**	102	16000	-
0.18	1.6	840	1.55	891.5	**BG60G20-../DPE07LA4**	102	16000	-
0.18	1.4	980	1.35	1051	**BG60G20-../DPE07LA4**	102	16000	-
0.18	1.2	1180	1.1	1168	**BG60G20-../DPE07LA4**	102	16000	-
0.18	1.1	1290	1.0	1346	**BG60G20-../DPE07LA4**	102	16000	-
0.18	1.8	750	3.3	790.2	**BG70G20-../DPE07LA4**	132	20000	-
0.18	1.6	860	2.9	877.6	**BG70G20-../DPE07LA4**	132	20000	-
0.18	1.4	1000	2.5	1035	**BG70G20-../DPE07LA4**	132	20000	-
0.18	1.2	1190	2.1	1193	**BG70G20-../DPE07LA4**	132	20000	-
0.18	1.1	1320	1.9	1389	**BG70G20-../DPE07LA4**	132	20000	-
0.18	0.95	1570	1.6	1543	**BG70G20-../DPE07LA4**	132	20000	-
0.18	0.85	1780	1.4	1666	**BG70G20-../DPE07LA4**	132	20000	-
0.18	0.75	2050	1.2	1994	**BG70G20-../DPE07LA4**	132	20000	-
0.18	0.65	2400	1.05	2215	**BG70G20-../DPE07LA4**	132	20000	-

0.25 kW

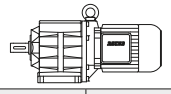

P_N	50 Hz			i	Type	m	F_{RN}	F_{RV}
	n_2	M_2	f_B					
[kW]	[1/min]	[Nm]	[—]	[:1]		[kg]	[N]	[N]
0.25	520	4.55	4.0	2.82	**BG06-../DPE08MA4**	16	470	-
0.25	385	6.2	3.2	3.78	**BG06-../DPE08MA4**	16	520	-
0.25	320	7.4	3.0	4.54	**BG06-../DPE08MA4**	16	530	-
0.25	245	9.7	2.5	5.96	**BG06-../DPE08MA4**	16	570	-
0.25	210	11.3	2.3	7.01	**BG06-../DPE08MA4**	16	580	-
0.25	189	12.6	2.2	7.65	**BG06-../DPE08MA4**	16	580	-
0.25	172	13.8	2.0	8.39	**BG06-../DPE08MA4**	16	600	-
0.25	154	15.5	1.95	9.38	**BG06-../DPE08MA4**	16	640	-
0.25	141	16.9	1.85	10.24	**BG06-../DPE08MA4**	16	640	-
0.25	128	18.6	1.7	11.28	**BG06-../DPE08MA4**	16	670	-
0.25	118	20	1.65	12.30	**BG06-../DPE08MA4**	16	670	-
0.25	111	21.5	1.55	12.98	**BG06-../DPE08MA4**	16	600	-
0.25	98	24	1.4	14.78	**BG06-../DPE08MA4**	16	730	-
0.25	90	26.5	1.3	16.13	**BG06-../DPE08MA4**	16	740	-
0.25	83	28.5	1.35	17.40	**BG06-../DPE08MA4**	16	760	-
0.25	76	31	1.3	18.98	**BG06-../DPE08MA4**	16	770	-
0.25	70	34	1.2	20.82	**BG06-../DPE08MA4**	16	800	-
0.25	64	37	1.15	22.71	**BG06-../DPE08MA4**	16	810	-
0.25	57	41.5	1.1	25.48	**BG06-../DPE08MA4**	16	850	-
0.25	52	45.5	0.99	27.80	**BG06-../DPE08MA4**	16	840	-
0.25	45	53	0.85	32.22	**BG06-../DPE08MA4**	16	890	-
0.25	66	36	3.3	22.04	**BG10-../DPE08MA4**	16	1330	1860
0.25	59	40	3.0	24.42	**BG10-../DPE08MA4**	16	1410	1970
0.25	55	43	2.8	26.26	**BG10-../DPE08MA4**	16	1460	2000
0.25	50	47.5	2.5	29.09	**BG10-../DPE08MA4**	16	1540	2150
0.25	46	51	2.4	31.52	**BG10-../DPE08MA4**	16	1600	2200
0.25	41.5	57	2.1	34.92	**BG10-../DPE08MA4**	16	1690	2350
0.25	36.5	65	1.85	39.70	**BG10-../DPE08MA4**	16	1780	2450
0.25	33	72	1.65	43.99	**BG10-../DPE08MA4**	16	1880	2600

0.25 kW

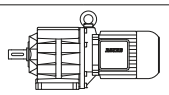

P_N	50 Hz			i	Type	m	F_{RN}	F_{RV}
	n_2	M_2	f_B					
[kW]	[1/min]	[Nm]	[—]	[:1]		[kg]	[N]	[N]
0.25	31	77	1.55	46.55	**BG10-../DPE08MA4**	16	1920	2650
0.25	28	85	1.4	51.57	**BG10-../DPE08MA4**	16	2000	2800
0.25	25.5	93	1.3	57.48	**BG10-../DPE08MA4**	16	2000	2800
0.25	23	103	1.15	63.69	**BG10-../DPE08MA4**	16	2000	2800
0.25	21.5	111	0.93	67.54	**BG10Z-../DPE08MA4**	18	2000	2800
0.25	19	125	0.96	77.40	**BG10Z-../DPE08MA4**	18	2000	2800
0.25	17	140	0.86	85.76	**BG10Z-../DPE08MA4**	18	2000	2800
0.25	16	149	0.81	92.19	**BG10Z-../DPE08MA4**	18	2000	2800
0.25	48	49.5	3.0	30.08	**BG15-../DPE08MA4**	16	3000	6000
0.25	42.5	56	2.7	34.20	**BG15-../DPE08MA4**	16	3000	6000
0.25	38	62	2.4	37.90	**BG15-../DPE08MA4**	16	3000	6000
0.25	39	61	3.3	37.02	**BG20-../DPE08MA4**	19	4300	-
0.25	34.5	69	2.9	41.76	**BG20-../DPE08MA4**	19	4500	-
0.25	31.5	75	2.7	46.38	**BG20-../DPE08MA4**	19	4700	-
0.25	30.5	78	2.6	47.92	**BG20-../DPE08MA4**	19	4750	-
0.25	27.5	86	2.3	53.22	**BG20-../DPE08MA4**	19	4950	-
0.25	24.5	97	2.1	59.07	**BG20-../DPE08MA4**	19	5000	-
0.25	22	108	1.85	65.62	**BG20-../DPE08MA4**	19	5000	-
0.25	21.5	111	1.8	67.53	**BG20Z-../DPE08MA4**	20	5000	-
0.25	19.5	122	1.65	75.00	**BG20Z-../DPE08MA4**	20	5000	-
0.25	18.5	129	1.55	78.60	**BG20Z-../DPE08MA4**	20	5000	-
0.25	16.5	144	1.4	87.30	**BG20Z-../DPE08MA4**	20	5000	-
0.25	15.5	154	1.3	94.27	**BG20Z-../DPE08MA4**	20	5000	-
0.25	14	170	1.2	104.7	**BG20Z-../DPE08MA4**	20	5000	-
0.25	13	183	1.1	112.8	**BG20Z-../DPE08MA4**	20	5000	-
0.25	11.5	205	0.98	125.3	**BG20Z-../DPE08MA4**	20	5000	-
0.25	10.5	225	0.89	141.3	**BG20Z-../DPE08MA4**	20	5000	-
0.25	25	95	3.2	58.18	**BG30-../DPE08MA4**	23	6000	-
0.25	24	99	3.0	60.79	**BG30-../DPE08MA4**	23	6000	-
0.25	21.5	111	2.7	67.44	**BG30-../DPE08MA4**	23	6000	-
0.25	20	119	2.5	73.51	**BG30Z-../DPE08MA4**	26	6000	-
0.25	18	132	2.3	81.55	**BG30Z-../DPE08MA4**	26	6000	-
0.25	17	140	2.1	86.13	**BG30Z-../DPE08MA4**	26	6000	-
0.25	15.5	154	1.95	95.55	**BG30Z-../DPE08MA4**	26	6000	-
0.25	13.5	176	1.7	109.6	**BG30Z-../DPE08MA4**	26	6000	-
0.25	12	198	1.5	121.6	**BG30Z-../DPE08MA4**	26	6000	-
0.25	11.5	205	1.45	128.5	**BG30Z-../DPE08MA4**	26	6000	-
0.25	10.5	225	1.35	142.5	**BG30Z-../DPE08MA4**	26	6000	-
0.25	9.6	245	1.2	151.5	**BG30Z-../DPE08MA4**	26	6000	-
0.25	8.6	275	1.1	168.1	**BG30Z-../DPE08MA4**	26	6000	-
0.25	7.9	300	1.0	182.9	**BG30Z-../DPE08MA4**	26	6000	-
0.25	7.1	335	0.9	202.9	**BG30Z-../DPE08MA4**	26	6000	-
0.25	6.4	370	0.81	225.9	**BG30Z-../DPE08MA4**	26	6000	-
0.25	5.7	390	0.83	254.9	**BG30G06-../DPE08MA4**	32	6000	-
0.25	18	132	3.2	82.00	**BG40Z-../DPE08MA4**	42	7000	-
0.25	16	149	2.9	91.02	**BG40Z-../DPE08MA4**	42	7000	-
0.25	15	159	2.7	96.86	**BG40Z-../DPE08MA4**	42	7000	-
0.25	13.5	176	2.4	107.5	**BG40Z-../DPE08MA4**	42	7000	-
0.25	12	198	2.1	121.3	**BG40Z-../DPE08MA4**	42	7000	-
0.25	11	215	2.0	134.6	**BG40Z-../DPE08MA4**	42	7000	-
0.25	10.5	225	1.9	141.4	**BG40Z-../DPE08MA4**	42	7000	-
0.25	9.2	255	1.65	156.9	**BG40Z-../DPE08MA4**	42	7000	-
0.25	8.7	270	1.55	166.1	**BG40Z-../DPE08MA4**	42	7000	-
0.25	7.9	300	1.4	184.4	**BG40Z-../DPE08MA4**	42	7000	-
0.25	7.3	325	1.3	199.9	**BG40Z-../DPE08MA4**	42	7000	-
0.25	6.5	365	1.15	221.9	**BG40Z-../DPE08MA4**	42	7000	-
0.25	5.9	400	1.05	246.5	**BG40Z-../DPE08MA4**	42	7000	-
0.25	5.3	450	0.94	273.6	**BG40Z-../DPE08MA4**	42	7000	-
0.25	5.0	385	1.2	288.6	**BG40G10-../DPE08MA4**	47	7000	-
0.25	4.1	480	0.97	353.5	**BG40G10-../DPE08MA4**	47	7000	-
0.25	11.5	205	3.1	128.9	**BG50Z-../DPE08MA4**	51	10000	-
0.25	10.5	225	2.8	142.9	**BG50Z-../DPE08MA4**	51	10000	-
0.25	8.8	270	2.3	164.9	**BG50Z-../DPE08MA4**	51	10000	-
0.25	7.9	300	2.1	182.8	**BG50Z-../DPE08MA4**	51	10000	-
0.25	7.1	335	1.9	204.7	**BG50Z-../DPE08MA4**	51	10000	-

0.25 kW

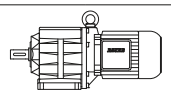

P_N	50 Hz			i	Type	m	F_{RN}	F_{RV}
	n_2	M_2	f_B					
[kW]	[1/min]	[Nm]	[—]	[:1]		[kg]	[N]	[N]
0.25	6.4	370	1.7	226.9	**BG50Z-../DPE08MA4**	51	10000	-
0.25	5.6	425	1.5	258.6	**BG50Z-../DPE08MA4**	51	10000	-
0.25	5.1	465	1.35	286.7	**BG50Z-../DPE08MA4**	51	10000	-
0.25	4.1	480	1.45	351.7	**BG50G10-../DPE08MA4**	55	10000	-
0.25	3.3	610	1.15	446.5	**BG50G10-../DPE08MA4**	55	10000	-
0.25	2.8	730	0.95	531.5	**BG50G10-../DPE08MA4**	55	10000	-
0.25	6.4	370	3.2	226.7	**BG60Z-../DPE08MA4**	96	16000	-
0.25	5.9	400	3.0	247.7	**BG60Z-../DPE08MA4**	96	16000	-
0.25	5.3	450	2.7	274.5	**BG60Z-../DPE08MA4**	96	16000	-
0.25	4.4	400	3.3	334.3	**BG60G20-../DPE08MA4**	103	16000	-
0.25	3.9	455	2.9	370.5	**BG60G20-../DPE08MA4**	103	16000	-
0.25	3.3	550	2.4	437.3	**BG60G20-../DPE08MA4**	103	16000	-
0.25	2.9	670	1.95	504.9	**BG60G20-../DPE08MA4**	103	16000	-
0.25	2.6	750	1.75	559.5	**BG60G20-../DPE08MA4**	103	16000	-
0.25	2.3	870	1.5	651.3	**BG60G20-../DPE08MA4**	103	16000	-
0.25	1.8	1120	1.15	804.5	**BG60G20-../DPE08MA4**	103	16000	-
0.25	1.7	1170	1.1	891.5	**BG60G20-../DPE08MA4**	103	16000	-
0.25	1.4	1460	0.89	1051	**BG60G20-../DPE08MA4**	103	16000	-
0.25	1.3	1580	0.82	1168	**BG60G20-../DPE08MA4**	103	16000	-
0.25	2.5	800	3.1	577.3	**BG70G20-../DPE08MA4**	133	20000	-
0.25	2.2	910	2.7	665.8	**BG70G20-../DPE08MA4**	133	20000	-
0.25	1.9	1050	2.4	790.2	**BG70G20-../DPE08MA4**	133	20000	-
0.25	1.7	1190	2.1	877.6	**BG70G20-../DPE08MA4**	133	20000	-
0.25	1.4	1480	1.7	1035	**BG70G20-../DPE08MA4**	133	20000	-
0.25	1.3	1600	1.55	1193	**BG70G20-../DPE08MA4**	133	20000	-
0.25	1.1	1930	1.3	1389	**BG70G20-../DPE08MA4**	133	20000	-
0.25	0.95	2250	1.1	1543	**BG70G20-../DPE08MA4**	133	20000	-
0.25	0.9	2400	1.05	1666	**BG70G20-../DPE08MA4**	133	20000	-
0.25	1.2	1440	3.2	1261	**BG80G40-../DPE08MA4**	215	26000	-
0.25	1.1	1630	2.8	1400	**BG80G40-../DPE08MA4**	215	26000	-
0.25	0.9	2100	2.2	1653	**BG80G40-../DPE08MA4**	215	26000	-
0.25	0.7	2850	1.6	2070	**BG80G40-../DPE08MA4**	215	26000	-
0.25	0.6	3400	1.35	2413	**BG80G40-../DPE08MA4**	215	26000	-
0.25	0.55	3800	1.2	2836	**BG80G40-../DPE08MA4**	215	26000	-
0.25	0.6	3300	2.8	2514	**BG90G50-../DPE08MA4**	324	65000	-
0.25	0.55	3650	2.5	2786	**BG90G50-../DPE08MA4**	324	65000	-
0.25	0.46	4500	2.0	3177	**BG90G50-../DPE08MA4**	324	65000	-
0.25	0.41	5100	1.8	3521	**BG90G50-../DPE08MA4**	324	65000	-
0.25	0.25	7000	2.6	5888	**BG100G50-../DPE08MA4**	512	90000	-
0.25	0.23	7800	2.4	6529	**BG100G50-../DPE08MA4**	512	90000	-
0.25	0.2	9400	1.95	7533	**BG100G50-../DPE08MA4**	512	90000	-
0.25	0.18	10700	1.75	8350	**BG100G50-../DPE08MA4**	512	90000	-
0.25	0.16	12400	1.5	9348	**BG100G50-../DPE08MA4**	512	90000	-

0.37 kW

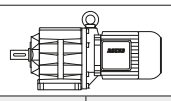

P_N	50 Hz			i	Type	m	F_{RN}	F_{RV}
	n_2	M_2	f_B					
[kW]	[1/min]	[Nm]	[—]	[:1]		[kg]	[N]	[N]
0.37	520	6.7	2.7	2.82	**BG06-../DPE08LA4**	18	470	-
0.37	385	9.1	2.2	3.78	**BG06-../DPE08LA4**	18	520	-
0.37	320	11	2.0	4.54	**BG06-../DPE08LA4**	18	530	-
0.37	245	14.4	1.65	5.96	**BG06-../DPE08LA4**	18	570	-
0.37	210	16.8	1.55	7.01	**BG06-../DPE08LA4**	18	580	-
0.37	189	18.6	1.5	7.65	**BG06-../DPE08LA4**	18	580	-
0.37	173	20	1.4	8.39	**BG06-../DPE08LA4**	18	600	-
0.37	155	22.5	1.35	9.38	**BG06-../DPE08LA4**	18	640	-
0.37	142	24.5	1.25	10.24	**BG06-../DPE08LA4**	18	640	-
0.37	129	27	1.2	11.28	**BG06-../DPE08LA4**	18	670	-
0.37	118	29.5	1.1	12.30	**BG06-../DPE08LA4**	18	670	-
0.37	112	31.5	1.05	12.98	**BG06-../DPE08LA4**	18	600	-
0.37	98	36	0.94	14.78	**BG06-../DPE08LA4**	18	730	-

0.37 kW

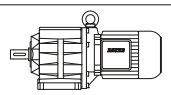

P_N	50 Hz			i	Type	m	F_{RN}	F_{RV}
	n_2	M_2	f_B					
[kW]	[1/min]	[Nm]	[—]	[:1]		[kg]	[N]	[N]
0.37	90	39	0.9	16.13	**BG06-../DPE08LA4**	18	740	-
0.37	84	42	0.9	17.40	**BG06-../DPE08LA4**	18	760	-
0.37	77	45.5	0.88	18.98	**BG06-../DPE08LA4**	18	770	-
0.37	70	50	0.8	20.82	**BG06-../DPE08LA4**	18	800	-
0.37	100	35	3.3	14.58	**BG10-../DPE08LA4**	18	1100	1540
0.37	90	39	3.0	16.15	**BG10-../DPE08LA4**	18	1140	1590
0.37	79	44.5	2.7	18.51	**BG10-../DPE08LA4**	18	1210	1690
0.37	71	49.5	2.4	20.51	**BG10-../DPE08LA4**	18	1290	1800
0.37	66	53	2.3	22.04	**BG10-../DPE08LA4**	18	1330	1860
0.37	60	58	2.1	24.42	**BG10-../DPE08LA4**	18	1410	1970
0.37	56	63	1.9	26.26	**BG10-../DPE08LA4**	18	1460	2000
0.37	50	70	1.7	29.09	**BG10-../DPE08LA4**	18	1540	2150
0.37	46	76	1.6	31.52	**BG10-../DPE08LA4**	18	1600	2200
0.37	41.5	85	1.4	34.92	**BG10-../DPE08LA4**	18	1690	2350
0.37	36.5	96	1.25	39.70	**BG10-../DPE08LA4**	18	1780	2450
0.37	33	107	1.1	43.99	**BG10-../DPE08LA4**	18	1880	2600
0.37	31.5	112	1.05	46.55	**BG10-../DPE08LA4**	18	1920	2650
0.37	28.5	123	0.98	51.57	**BG10-../DPE08LA4**	18	2000	2800
0.37	25.5	138	0.87	57.48	**BG10-../DPE08LA4**	18	2000	2800
0.37	54	65	2.3	27.08	**BG15-../DPE08LA4**	18	3000	6000
0.37	48.5	72	2.1	30.08	**BG15-../DPE08LA4**	18	3000	6000
0.37	42.5	83	1.8	34.20	**BG15-../DPE08LA4**	18	3000	6000
0.37	38.5	91	1.65	37.90	**BG15-../DPE08LA4**	18	3000	6000
0.37	57	61	3.3	25.79	**BG20-../DPE08LA4**	20	3700	-
0.37	52	67	3.0	27.85	**BG20-../DPE08LA4**	20	3800	-
0.37	47	75	2.7	30.94	**BG20-../DPE08LA4**	20	4000	-
0.37	43.5	81	2.5	33.33	**BG20-../DPE08LA4**	20	4100	-
0.37	39.5	89	2.2	37.02	**BG20-../DPE08LA4**	20	4300	-
0.37	35	100	2.0	41.76	**BG20-../DPE08LA4**	20	4500	-
0.37	31.5	112	1.8	46.38	**BG20-../DPE08LA4**	20	4700	-
0.37	30.5	115	1.75	47.92	**BG20-../DPE08LA4**	20	4750	-
0.37	27.5	128	1.55	53.22	**BG20-../DPE08LA4**	20	4950	-
0.37	24.5	144	1.4	59.07	**BG20-../DPE08LA4**	20	5000	-
0.37	22.5	157	1.25	65.62	**BG20-../DPE08LA4**	20	5000	-
0.37	21.5	164	1.2	67.53	**BG20Z-../DPE08LA4**	22	5000	-
0.37	19.5	181	1.1	75.00	**BG20Z-../DPE08LA4**	22	5000	-
0.37	18.5	191	1.05	78.60	**BG20Z-../DPE08LA4**	22	5000	-
0.37	17	205	0.98	87.30	**BG20Z-../DPE08LA4**	22	5000	-
0.37	15.5	225	0.89	94.27	**BG20Z-../DPE08LA4**	22	5000	-
0.37	14	250	0.8	104.7	**BG20Z-../DPE08LA4**	22	5000	-
0.37	37.5	94	3.2	39.02	**BG30-../DPE08LA4**	25	5800	-
0.37	34.5	102	2.9	42.46	**BG30-../DPE08LA4**	25	5900	-
0.37	31	113	2.7	47.11	**BG30-../DPE08LA4**	25	6000	-
0.37	28	126	2.4	52.44	**BG30-../DPE08LA4**	25	6000	-
0.37	25	141	2.1	58.18	**BG30-../DPE08LA4**	25	6000	-
0.37	24	147	2.0	60.79	**BG30-../DPE08LA4**	25	6000	-
0.37	21.5	164	1.85	67.44	**BG30-../DPE08LA4**	25	6000	-
0.37	20	176	1.7	73.51	**BG30Z-../DPE08LA4**	28	6000	-
0.37	18	196	1.55	81.55	**BG30Z-../DPE08LA4**	28	6000	-
0.37	17	205	1.45	86.13	**BG30Z-../DPE08LA4**	28	6000	-
0.37	15.5	225	1.35	95.55	**BG30Z-../DPE08LA4**	28	6000	-
0.37	13.5	260	1.15	109.6	**BG30Z-../DPE08LA4**	28	6000	-
0.37	12	290	1.05	121.6	**BG30Z-../DPE08LA4**	28	6000	-
0.37	11.5	305	0.98	128.5	**BG30Z-../DPE08LA4**	28	6000	-
0.37	10.5	335	0.9	142.5	**BG30Z-../DPE08LA4**	28	6000	-
0.37	9.6	365	0.82	151.5	**BG30Z-../DPE08LA4**	28	6000	-
0.37	27	130	3.3	53.69	**BG40-../DPE08LA4**	40	7000	-
0.37	24.5	144	3.0	59.64	**BG40-../DPE08LA4**	40	7000	-
0.37	22	160	2.7	66.20	**BG40-../DPE08LA4**	40	7000	-
0.37	21.5	164	2.6	67.74	**BG40Z-../DPE08LA4**	43	7000	-
0.37	19.5	181	2.3	75.19	**BG40Z-../DPE08LA4**	43	7000	-
0.37	18	196	2.2	82.00	**BG40Z-../DPE08LA4**	43	7000	-
0.37	16	220	1.95	91.02	**BG40Z-../DPE08LA4**	43	7000	-
0.37	15	235	1.8	96.86	**BG40Z-../DPE08LA4**	43	7000	-
0.37	13.5	260	1.65	107.5	**BG40Z-../DPE08LA4**	43	7000	-

0.37 kW

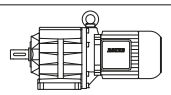

P_N	50 Hz			i	Type	m	F_{RN}	F_{RV}
	n_2	M_2	f_B					
[kW]	[1/min]	[Nm]	[—]	[:1]		[kg]	[N]	[N]
0.37	12	290	1.45	121.3	**BG40Z-../DPE08LA4**	43	7000	-
0.37	11	320	1.35	134.6	**BG40Z-../DPE08LA4**	43	7000	-
0.37	10.5	335	1.25	141.4	**BG40Z-../DPE08LA4**	43	7000	-
0.37	9.3	375	1.15	156.9	**BG40Z-../DPE08LA4**	43	7000	-
0.37	8.7	405	1.05	166.1	**BG40Z-../DPE08LA4**	43	7000	-
0.37	7.9	445	0.96	184.4	**BG40Z-../DPE08LA4**	43	7000	-
0.37	7.3	480	0.89	199.9	**BG40Z-../DPE08LA4**	43	7000	-
0.37	6.6	530	0.8	221.9	**BG40Z-../DPE08LA4**	43	7000	-
0.37	18.5	191	3.3	79.78	**BG50Z-../DPE08LA4**	52	10000	-
0.37	15.5	225	2.8	95.58	**BG50Z-../DPE08LA4**	52	10000	-
0.37	14	250	2.5	106.0	**BG50Z-../DPE08LA4**	52	10000	-
0.37	11.5	305	2.1	128.9	**BG50Z-../DPE08LA4**	52	10000	-
0.37	10.5	335	1.9	142.9	**BG50Z-../DPE08LA4**	52	10000	-
0.37	8.8	400	1.6	164.9	**BG50Z-../DPE08LA4**	52	10000	-
0.37	8.0	440	1.45	182.8	**BG50Z-../DPE08LA4**	52	10000	-
0.37	7.1	495	1.25	204.7	**BG50Z-../DPE08LA4**	52	10000	-
0.37	6.4	550	1.15	226.9	**BG50Z-../DPE08LA4**	52	10000	-
0.37	5.6	630	1.0	258.6	**BG50Z-../DPE08LA4**	52	10000	-
0.37	5.1	690	0.91	286.7	**BG50Z-../DPE08LA4**	52	10000	-
0.37	4.2	740	0.93	351.7	**BG50G10-../DPE08LA4**	56	10000	-
0.37	9.2	380	3.2	158.0	**BG60Z-../DPE08LA4**	97	16000	-
0.37	8.3	425	2.8	175.1	**BG60Z-../DPE08LA4**	97	16000	-
0.37	7.1	495	2.4	204.6	**BG60Z-../DPE08LA4**	97	16000	-
0.37	6.4	550	2.2	226.7	**BG60Z-../DPE08LA4**	97	16000	-
0.37	5.9	590	2.0	247.7	**BG60Z-../DPE08LA4**	97	16000	-
0.37	5.3	660	1.8	274.5	**BG60Z-../DPE08LA4**	97	16000	-
0.37	4.8	600	2.2	306.1	**BG60G20-../DPE08LA4**	105	16000	-
0.37	4.4	660	1.95	334.3	**BG60G20-../DPE08LA4**	105	16000	-
0.37	4.0	720	1.8	370.5	**BG60G20-../DPE08LA4**	105	16000	-
0.37	3.4	870	1.5	437.3	**BG60G20-../DPE08LA4**	105	16000	-
0.37	2.9	1060	1.25	504.9	**BG60G20-../DPE08LA4**	105	16000	-
0.37	2.6	1190	1.1	559.5	**BG60G20-../DPE08LA4**	105	16000	-
0.37	2.3	1370	0.95	651.3	**BG60G20-../DPE08LA4**	105	16000	-
0.37	3.8	780	3.2	387.6	**BG70G20-../DPE08LA4**	135	20000	-
0.37	3.5	880	2.8	417.8	**BG70G20-../DPE08LA4**	135	20000	-
0.37	3.0	1030	2.4	495.9	**BG70G20-../DPE08LA4**	135	20000	-
0.37	2.6	1210	2.1	577.3	**BG70G20-../DPE08LA4**	135	20000	-
0.37	2.2	1430	1.75	665.8	**BG70G20-../DPE08LA4**	135	20000	-
0.37	1.9	1650	1.5	790.2	**BG70G20-../DPE08LA4**	135	20000	-
0.37	1.7	1870	1.35	877.6	**BG70G20-../DPE08LA4**	135	20000	-
0.37	1.4	2300	1.1	1035	**BG70G20-../DPE08LA4**	135	20000	-
0.37	1.3	2450	1.0	1193	**BG70G20-../DPE08LA4**	135	20000	-
0.37	1.1	2950	0.85	1389	**BG70G20-../DPE08LA4**	135	20000	-
0.37	1.8	1440	3.2	817.4	**BG80G40-../DPE08LA4**	216	26000	-
0.37	1.6	1670	2.8	907.6	**BG80G40-../DPE08LA4**	216	26000	-
0.37	1.4	1980	2.3	1042	**BG80G40-../DPE08LA4**	216	26000	-
0.37	1.2	2400	1.9	1261	**BG80G40-../DPE08LA4**	216	26000	-
0.37	1.1	2650	1.75	1400	**BG80G40-../DPE08LA4**	216	26000	-
0.37	0.9	3350	1.35	1653	**BG80G40-../DPE08LA4**	216	26000	-
0.37	0.7	4500	1.0	2070	**BG80G40-../DPE08LA4**	216	26000	-
0.37	0.95	3000	3.1	1583	**BG90G50-../DPE08LA4**	326	65000	-
0.37	0.85	3450	2.7	1756	**BG90G50-../DPE08LA4**	326	65000	-
0.37	0.75	4000	2.3	2026	**BG90G50-../DPE08LA4**	326	65000	-
0.37	0.6	5200	1.75	2514	**BG90G50-../DPE08LA4**	326	65000	-
0.37	0.55	5700	1.6	2786	**BG90G50-../DPE08LA4**	326	65000	-
0.37	0.46	7000	1.3	3177	**BG90G50-../DPE08LA4**	326	65000	-
0.37	0.42	7700	1.2	3521	**BG90G50-../DPE08LA4**	326	65000	-
0.37	0.4	6300	2.9	3644	**BG100G50-../DPE08LA4**	513	90000	-
0.37	0.34	7800	2.4	4366	**BG100G50-../DPE08LA4**	513	90000	-
0.37	0.3	9200	2.0	4839	**BG100G50-../DPE08LA4**	513	90000	-
0.37	0.25	11600	1.6	5888	**BG100G50-../DPE08LA4**	513	90000	-
0.37	0.23	12800	1.45	6529	**BG100G50-../DPE08LA4**	513	90000	-
0.37	0.2	15100	1.25	7533	**BG100G50-../DPE08LA4**	513	90000	-
0.37	0.18	17100	1.1	8350	**BG100G50-../DPE08LA4**	513	90000	-

0.55 kW

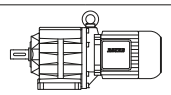

P_N	50 Hz			i	Type	m	F_{RN}	F_{RV}
	n_2	M_2	f_B					
[kW]	[1/min]	[Nm]	[—]	[:1]		[kg]	[N]	[N]
0.55	510	10.2	1.75	2.82	**BG06-../DPE08XA4**	19	470	-
0.55	380	13.8	1.45	3.78	**BG06-../DPE08XA4**	19	520	-
0.55	315	16.6	1.35	4.54	**BG06-../DPE08XA4**	19	530	-
0.55	240	21.5	1.1	5.96	**BG06-../DPE08XA4**	19	570	-
0.55	205	25.5	1.0	7.01	**BG06-../DPE08XA4**	19	580	-
0.55	187	28	1.0	7.65	**BG06-../DPE08XA4**	19	580	-
0.55	171	30.5	0.92	8.39	**BG06-../DPE08XA4**	19	600	-
0.55	153	34	0.88	9.38	**BG06-../DPE08XA4**	19	640	-
0.55	140	37.5	0.83	10.24	**BG06-../DPE08XA4**	19	640	-
0.55	188	27.5	3.2	7.63	**BG10-../DPE08XA4**	19	900	1250
0.55	178	29.5	3.0	8.07	**BG10-../DPE08XA4**	19	660	920
0.55	154	34	2.9	9.33	**BG10-../DPE08XA4**	19	950	1330
0.55	139	37.5	2.6	10.34	**BG10-../DPE08XA4**	19	1000	1400
0.55	120	43.5	2.4	11.92	**BG10-../DPE08XA4**	19	1030	1440
0.55	109	48	2.3	13.21	**BG10-../DPE08XA4**	19	1070	1490
0.55	99	53	2.2	14.58	**BG10-../DPE08XA4**	19	1100	1540
0.55	89	59	2.0	16.15	**BG10-../DPE08XA4**	19	1140	1590
0.55	78	67	1.8	18.51	**BG10-../DPE08XA4**	19	1210	1690
0.55	70	75	1.6	20.51	**BG10-../DPE08XA4**	19	1290	1800
0.55	65	80	1.5	22.04	**BG10-../DPE08XA4**	19	1330	1860
0.55	59	89	1.35	24.42	**BG10-../DPE08XA4**	19	1410	1970
0.55	55	95	1.25	26.26	**BG10-../DPE08XA4**	19	1460	2000
0.55	49.5	106	1.15	29.09	**BG10-../DPE08XA4**	19	1540	2150
0.55	45.5	115	1.05	31.52	**BG10-../DPE08XA4**	19	1600	2200
0.55	41	128	0.94	34.92	**BG10-../DPE08XA4**	19	1690	2350
0.55	36.5	143	0.84	39.70	**BG10-../DPE08XA4**	19	1780	2450
0.55	53	99	1.5	27.08	**BG15-../DPE08XA4**	19	3000	6000
0.55	48	109	1.4	30.08	**BG15-../DPE08XA4**	19	3000	6000
0.55	42	125	1.2	34.20	**BG15-../DPE08XA4**	19	3000	6000
0.55	38	138	1.1	37.90	**BG15-../DPE08XA4**	19	3000	6000
0.55	98	53	3.2	14.67	**BG20-../DPE08XA4**	22	3050	-
0.55	92	57	3.1	15.58	**BG20-../DPE08XA4**	22	3100	-
0.55	83	63	2.9	17.31	**BG20-../DPE08XA4**	22	3200	-
0.55	72	72	2.7	19.95	**BG20-../DPE08XA4**	22	3350	-
0.55	65	80	2.5	22.16	**BG20-../DPE08XA4**	22	3500	-
0.55	62	84	2.4	23.22	**BG20-../DPE08XA4**	22	3550	-
0.55	56	93	2.2	25.79	**BG20-../DPE08XA4**	22	3700	-
0.55	52	101	2.0	27.85	**BG20-../DPE08XA4**	22	3800	-
0.55	46.5	112	1.8	30.94	**BG20-../DPE08XA4**	22	4000	-
0.55	43	122	1.65	33.33	**BG20-../DPE08XA4**	22	4100	-
0.55	39	134	1.5	37.02	**BG20-../DPE08XA4**	22	4300	-
0.55	34.5	152	1.3	41.76	**BG20-../DPE08XA4**	22	4500	-
0.55	31	169	1.2	46.38	**BG20-../DPE08XA4**	22	4700	-
0.55	30	175	1.15	47.92	**BG20-../DPE08XA4**	22	4750	-
0.55	27	194	1.05	53.22	**BG20-../DPE08XA4**	22	4950	-
0.55	24.5	210	0.95	59.07	**BG20-../DPE08XA4**	22	5000	-
0.55	22	235	0.85	65.62	**BG20-../DPE08XA4**	22	5000	-
0.55	21.5	240	0.83	67.53	**BG20Z-../DPE08XA4**	23	5000	-
0.55	57	92	3.3	25.45	**BG30-../DPE08XA4**	26	4850	-
0.55	51	102	2.9	28.24	**BG30-../DPE08XA4**	26	5100	-
0.55	48	109	2.8	29.83	**BG30-../DPE08XA4**	26	5200	-
0.55	43.5	120	2.5	33.09	**BG30-../DPE08XA4**	26	5400	-
0.55	41	128	2.3	35.17	**BG30-../DPE08XA4**	26	5500	-
0.55	37	141	2.1	39.02	**BG30-../DPE08XA4**	26	5800	-
0.55	34	154	1.95	42.46	**BG30-../DPE08XA4**	26	5900	-
0.55	30.5	172	1.75	47.11	**BG30-../DPE08XA4**	26	6000	-
0.55	27.5	191	1.55	52.44	**BG30-../DPE08XA4**	26	6000	-
0.55	25	210	1.45	58.18	**BG30-../DPE08XA4**	26	6000	-
0.55	24	215	1.4	60.79	**BG30-../DPE08XA4**	26	6000	-
0.55	21.5	240	1.25	67.44	**BG30-../DPE08XA4**	26	6000	-
0.55	19.5	265	1.15	73.51	**BG30Z-../DPE08XA4**	28	6000	-
0.55	18	290	1.05	81.55	**BG30Z-../DPE08XA4**	28	6000	-
0.55	17	305	0.98	86.13	**BG30Z-../DPE08XA4**	28	6000	-
0.55	15	350	0.86	95.55	**BG30Z-../DPE08XA4**	28	6000	-
0.55	38	138	3.1	37.96	**BG40-../DPE08XA4**	41	7000	-

0.55 kW

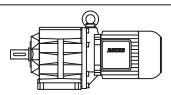

P_N	50 Hz			i	Type	m	F_{RN}	F_{RV}
	n_2	M_2	f_B					
[kW]	[1/min]	[Nm]	[—]	[:1]		[kg]	[N]	[N]
0.55	36	145	2.9	40.19	**BG40-../DPE08XA4**	41	7000	-
0.55	32.5	161	2.6	44.62	**BG40-../DPE08XA4**	41	7000	-
0.55	30	175	2.4	48.36	**BG40-../DPE08XA4**	41	7000	-
0.55	27	194	2.2	53.69	**BG40-../DPE08XA4**	41	7000	-
0.55	24	215	2.0	59.64	**BG40-../DPE08XA4**	41	7000	-
0.55	22	235	1.8	66.20	**BG40-../DPE08XA4**	41	7000	-
0.55	21.5	240	1.75	67.74	**BG40Z-../DPE08XA4**	44	7000	-
0.55	19.5	265	1.6	75.19	**BG40Z-../DPE08XA4**	44	7000	-
0.55	17.5	300	1.4	82.00	**BG40Z-../DPE08XA4**	44	7000	-
0.55	16	325	1.3	91.02	**BG40Z-../DPE08XA4**	44	7000	-
0.55	15	350	1.2	96.86	**BG40Z-../DPE08XA4**	44	7000	-
0.55	13.5	385	1.1	107.5	**BG40Z-../DPE08XA4**	44	7000	-
0.55	12	435	0.98	121.3	**BG40Z-../DPE08XA4**	44	7000	-
0.55	11	475	0.89	134.6	**BG40Z-../DPE08XA4**	44	7000	-
0.55	10.5	500	0.85	141.4	**BG40Z-../DPE08XA4**	44	7000	-
0.55	27.5	191	3.3	52.12	**BG50-../DPE08XA4**	48	10000	-
0.55	24.5	210	3.0	59.42	**BG50-../DPE08XA4**	48	10000	-
0.55	22	235	2.7	65.86	**BG50-../DPE08XA4**	48	10000	-
0.55	20	260	2.4	71.97	**BG50Z-../DPE08XA4**	53	10000	-
0.55	18	290	2.2	79.78	**BG50Z-../DPE08XA4**	53	10000	-
0.55	15	350	1.8	95.58	**BG50Z-../DPE08XA4**	53	10000	-
0.55	13.5	385	1.65	106.0	**BG50Z-../DPE08XA4**	53	10000	-
0.55	11.5	455	1.4	128.9	**BG50Z-../DPE08XA4**	53	10000	-
0.55	10.5	500	1.25	142.9	**BG50Z-../DPE08XA4**	53	10000	-
0.55	8.7	600	1.05	164.9	**BG50Z-../DPE08XA4**	53	10000	-
0.55	7.9	660	0.95	182.8	**BG50Z-../DPE08XA4**	53	10000	-
0.55	7.0	750	0.84	204.7	**BG50Z-../DPE08XA4**	53	10000	-
0.55	14.5	360	3.3	101.0	**BG60Z-../DPE08XA4**	98	16000	-
0.55	12	435	2.8	119.2	**BG60Z-../DPE08XA4**	98	16000	-
0.55	11	475	2.5	132.1	**BG60Z-../DPE08XA4**	98	16000	-
0.55	9.1	570	2.1	158.0	**BG60Z-../DPE08XA4**	98	16000	-
0.55	8.2	640	1.9	175.1	**BG60Z-../DPE08XA4**	98	16000	-
0.55	7.0	750	1.6	204.6	**BG60Z-../DPE08XA4**	98	16000	-
0.55	6.4	820	1.45	226.7	**BG60Z-../DPE08XA4**	98	16000	-
0.55	5.8	900	1.35	247.7	**BG60Z-../DPE08XA4**	98	16000	-
0.55	5.3	990	1.2	274.5	**BG60Z-../DPE08XA4**	98	16000	-
0.55	5.2	890	1.45	276.2	**BG60G20-../DPE08XA4**	106	16000	-
0.55	4.7	980	1.35	306.1	**BG60G20-../DPE08XA4**	106	16000	-
0.55	4.3	1080	1.2	334.3	**BG60G20-../DPE08XA4**	106	16000	-
0.55	3.9	1190	1.1	370.5	**BG60G20-../DPE08XA4**	106	16000	-
0.55	3.3	1420	0.92	437.3	**BG60G20-../DPE08XA4**	106	16000	-
0.55	7.4	700	3.3	194.4	**BG70Z-../DPE08XA4**	138	20000	-
0.55	6.8	770	3.0	210.5	**BG70Z-../DPE08XA4**	138	20000	-
0.55	5.8	900	2.6	249.8	**BG70Z-../DPE08XA4**	138	20000	-
0.55	5.6	830	3.0	255.5	**BG70G20-../DPE08XA4**	136	20000	-
0.55	5.2	890	2.8	276.7	**BG70G20-../DPE08XA4**	136	20000	-
0.55	4.4	1050	2.4	328.4	**BG70G20-../DPE08XA4**	136	20000	-
0.55	3.7	1270	1.95	387.6	**BG70G20-../DPE08XA4**	136	20000	-
0.55	3.5	1370	1.8	417.8	**BG70G20-../DPE08XA4**	136	20000	-
0.55	2.9	1660	1.5	495.9	**BG70G20-../DPE08XA4**	136	20000	-
0.55	2.5	1950	1.3	577.3	**BG70G20-../DPE08XA4**	136	20000	-
0.55	2.2	2200	1.15	665.8	**BG70G20-../DPE08XA4**	136	20000	-
0.55	1.9	2550	0.98	790.2	**BG70G20-../DPE08XA4**	136	20000	-
0.55	1.7	2850	0.88	877.6	**BG70G20-../DPE08XA4**	136	20000	-
0.55	2.5	1720	2.7	572.0	**BG80G40-../DPE08XA4**	217	26000	-
0.55	2.2	1900	2.4	657.8	**BG80G40-../DPE08XA4**	217	26000	-
0.55	2.0	2100	2.2	730.3	**BG80G40-../DPE08XA4**	217	26000	-
0.55	1.8	2350	1.95	817.4	**BG80G40-../DPE08XA4**	217	26000	-
0.55	1.6	2700	1.7	907.6	**BG80G40-../DPE08XA4**	217	26000	-
0.55	1.4	3200	1.45	1042	**BG80G40-../DPE08XA4**	217	26000	-
0.55	1.2	3800	1.2	1261	**BG80G40-../DPE08XA4**	217	26000	-
0.55	1.1	4200	1.1	1400	**BG80G40-../DPE08XA4**	217	26000	-
0.55	1.3	3350	2.7	1174	**BG90G50-../DPE08XA4**	327	65000	-
0.55	1.1	4100	2.2	1301	**BG90G50-../DPE08XA4**	327	65000	-
0.55	0.95	4850	1.9	1583	**BG90G50-../DPE08XA4**	327	65000	-

0.55 kW

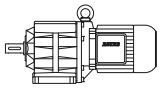

P_N	50 Hz			i	Type	m	F_{RN}	F_{RV}
	n_2	M_2	f_B					
[kW]	[1/min]	[Nm]	[—]	[:1]		[kg]	[N]	[N]
0.55	0.85	5500	1.65	1756	**BG90G50-../DPE08XA4**	327	65000	-
0.55	0.75	6300	1.45	2026	**BG90G50-../DPE08XA4**	327	65000	-
0.55	0.6	8000	1.15	2514	**BG90G50-../DPE08XA4**	327	65000	-
0.55	0.55	8800	1.05	2786	**BG90G50-../DPE08XA4**	327	65000	-
0.55	0.55	7100	2.6	2656	**BG100G50-../DPE08XA4**	514	90000	-
0.55	0.49	8400	2.2	2952	**BG100G50-../DPE08XA4**	514	90000	-
0.55	0.44	9400	1.95	3286	**BG100G50-../DPE08XA4**	514	90000	-
0.55	0.4	10600	1.75	3644	**BG100G50-../DPE08XA4**	514	90000	-
0.55	0.33	13400	1.4	4366	**BG100G50-../DPE08XA4**	514	90000	-
0.55	0.3	15000	1.25	4839	**BG100G50-../DPE08XA4**	514	90000	-

0.75 kW

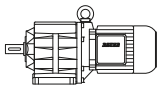

P_N	50 Hz			i	Type	m	F_{RN}	F_{RV}
	n_2	M_2	f_B					
[kW]	[1/min]	[Nm]	[—]	[:1]		[kg]	[N]	[N]
0.75	510	14	1.3	2.82	**BG06-../DPE08XB4**	19	470	-
0.75	380	18.8	1.05	3.78	**BG06-../DPE08XB4**	19	520	-
0.75	315	22.5	0.98	4.54	**BG06-../DPE08XB4**	19	530	-
0.75	240	29.5	0.81	5.96	**BG06-../DPE08XB4**	19	570	-
0.75	330	21.5	3.2	4.36	**BG10-../DPE08XB4**	19	650	910
0.75	270	26.5	2.8	5.34	**BG10-../DPE08XB4**	19	620	910
0.75	215	33	2.5	6.78	**BG10-../DPE08XB4**	19	660	920
0.75	210	34	2.6	6.89	**BG10-../DPE08XB4**	19	850	1200
0.75	187	38	2.3	7.63	**BG10-../DPE08XB4**	19	900	1250
0.75	177	40	2.2	8.07	**BG10-../DPE08XB4**	19	660	920
0.75	153	46.5	2.1	9.33	**BG10-../DPE08XB4**	19	950	1330
0.75	138	51	1.95	10.34	**BG10-../DPE08XB4**	19	1000	1400
0.75	120	59	1.8	11.92	**BG10-../DPE08XB4**	19	1030	1440
0.75	108	66	1.65	13.21	**BG10-../DPE08XB4**	19	1070	1490
0.75	98	73	1.55	14.58	**BG10-../DPE08XB4**	19	1100	1540
0.75	89	80	1.45	16.15	**BG10-../DPE08XB4**	19	1140	1590
0.75	77	93	1.3	18.51	**BG10-../DPE08XB4**	19	1210	1690
0.75	70	102	1.2	20.51	**BG10-../DPE08XB4**	19	1290	1800
0.75	65	110	1.1	22.04	**BG10-../DPE08XB4**	19	1330	1860
0.75	59	121	0.99	24.42	**BG10-../DPE08XB4**	19	1410	1970
0.75	55	130	0.92	26.26	**BG10-../DPE08XB4**	19	1460	2000
0.75	49	146	0.82	29.09	**BG10-../DPE08XB4**	19	1540	2150
0.75	53	135	1.1	27.08	**BG15-../DPE08XB4**	19	3000	6000
0.75	47.5	150	1.0	30.08	**BG15-../DPE08XB4**	19	3000	6000
0.75	42	170	0.88	34.20	**BG15-../DPE08XB4**	19	3000	6000
0.75	38	188	0.8	37.90	**BG15-../DPE08XB4**	19	3000	6000
0.75	172	41.5	2.9	8.29	**BG20-../DPE08XB4**	22	2250	-
0.75	160	44.5	3.2	8.91	**BG20-../DPE08XB4**	22	2600	-
0.75	148	48	2.5	9.65	**BG20-../DPE08XB4**	22	2250	-
0.75	136	52	3.0	10.54	**BG20-../DPE08XB4**	22	2700	-
0.75	122	58	2.7	11.71	**BG20-../DPE08XB4**	22	2800	-
0.75	108	66	2.5	13.21	**BG20-../DPE08XB4**	22	2900	-
0.75	98	73	2.4	14.67	**BG20-../DPE08XB4**	22	3050	-
0.75	92	77	2.3	15.58	**BG20-../DPE08XB4**	22	3100	-
0.75	83	86	2.1	17.31	**BG20-../DPE08XB4**	22	3200	-
0.75	72	99	1.95	19.95	**BG20-../DPE08XB4**	22	3350	-
0.75	65	110	1.8	22.16	**BG20-../DPE08XB4**	22	3500	-
0.75	62	115	1.75	23.22	**BG20-../DPE08XB4**	22	3550	-
0.75	56	127	1.55	25.79	**BG20-../DPE08XB4**	22	3700	-
0.75	52	137	1.45	27.85	**BG20-../DPE08XB4**	22	3800	-
0.75	46.5	154	1.3	30.94	**BG20-../DPE08XB4**	22	4000	-
0.75	43	166	1.2	33.33	**BG20-../DPE08XB4**	22	4100	-
0.75	38.5	186	1.1	37.02	**BG20-../DPE08XB4**	22	4300	-
0.75	34.5	205	0.98	41.76	**BG20-../DPE08XB4**	22	4500	-
0.75	31	230	0.87	46.38	**BG20-../DPE08XB4**	22	4700	-
0.75	30	235	0.85	47.92	**BG20-../DPE08XB4**	22	4750	-

0.75 kW

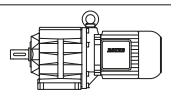

P_N	50 Hz			i	Type	m	F_{RN}	F_{RV}
	n_2	M_2	f_B					
[kW]	[1/min]	[Nm]	[—]	[:1]		[kg]	[N]	[N]
0.75	76	94	3.2	18.93	**BG30-../DPE08XB4**	26	4100	-
0.75	72	99	3.0	19.99	**BG30-../DPE08XB4**	26	4200	-
0.75	65	110	2.7	22.18	**BG30-../DPE08XB4**	26	4600	-
0.75	56	127	2.4	25.45	**BG30-../DPE08XB4**	26	4850	-
0.75	51	140	2.1	28.24	**BG30-../DPE08XB4**	26	5100	-
0.75	48	149	2.0	29.83	**BG30-../DPE08XB4**	26	5200	-
0.75	43.5	164	1.85	33.09	**BG30-../DPE08XB4**	26	5400	-
0.75	41	174	1.7	35.17	**BG30-../DPE08XB4**	26	5500	-
0.75	37	193	1.55	39.02	**BG30-../DPE08XB4**	26	5800	-
0.75	34	210	1.45	42.46	**BG30-../DPE08XB4**	26	5900	-
0.75	30.5	230	1.3	47.11	**BG30-../DPE08XB4**	26	6000	-
0.75	27.5	260	1.15	52.44	**BG30-../DPE08XB4**	26	6000	-
0.75	24.5	290	1.05	58.18	**BG30-../DPE08XB4**	26	6000	-
0.75	23.5	300	1.0	60.79	**BG30-../DPE08XB4**	26	6000	-
0.75	21.5	330	0.91	67.44	**BG30-../DPE08XB4**	26	6000	-
0.75	19.5	365	0.82	73.51	**BG30Z-../DPE08XB4**	29	6000	-
0.75	55	130	3.3	26.01	**BG40-../DPE08XB4**	41	6500	-
0.75	49	146	2.9	29.34	**BG40-../DPE08XB4**	41	6800	-
0.75	44	162	2.6	32.57	**BG40-../DPE08XB4**	41	7000	-
0.75	42	170	2.5	34.20	**BG40-../DPE08XB4**	41	7000	-
0.75	38	188	2.3	37.96	**BG40-../DPE08XB4**	41	7000	-
0.75	35.5	200	2.1	40.19	**BG40-../DPE08XB4**	41	7000	-
0.75	32	220	1.95	44.62	**BG40-../DPE08XB4**	41	7000	-
0.75	29.5	240	1.75	48.36	**BG40-../DPE08XB4**	41	7000	-
0.75	27	265	1.6	53.69	**BG40-../DPE08XB4**	41	7000	-
0.75	24	295	1.45	59.64	**BG40-../DPE08XB4**	41	7000	-
0.75	22	325	1.3	66.20	**BG40-../DPE08XB4**	41	7000	-
0.75	21.5	330	1.3	67.74	**BG40Z-../DPE08XB4**	44	7000	-
0.75	19	375	1.15	75.19	**BG40Z-../DPE08XB4**	44	7000	-
0.75	17.5	405	1.05	82.00	**BG40Z-../DPE08XB4**	44	7000	-
0.75	16	445	0.96	91.02	**BG40Z-../DPE08XB4**	44	7000	-
0.75	15	475	0.89	96.86	**BG40Z-../DPE08XB4**	44	7000	-
0.75	13.5	530	0.8	107.5	**BG40Z-../DPE08XB4**	44	7000	-
0.75	34	210	3.0	42.00	**BG50-../DPE08XB4**	49	10000	-
0.75	30.5	230	2.7	47.02	**BG50-../DPE08XB4**	49	10000	-
0.75	27.5	260	2.4	52.12	**BG50-../DPE08XB4**	49	10000	-
0.75	24	295	2.1	59.42	**BG50-../DPE08XB4**	49	10000	-
0.75	22	325	1.95	65.86	**BG50-../DPE08XB4**	49	10000	-
0.75	20	355	1.75	71.97	**BG50Z-../DPE08XB4**	54	10000	-
0.75	18	395	1.6	79.78	**BG50Z-../DPE08XB4**	54	10000	-
0.75	15	475	1.35	95.58	**BG50Z-../DPE08XB4**	54	10000	-
0.75	13.5	530	1.2	106.0	**BG50Z-../DPE08XB4**	54	10000	-
0.75	11.5	620	1.0	128.9	**BG50Z-../DPE08XB4**	54	10000	-
0.75	10	710	0.89	142.9	**BG50Z-../DPE08XB4**	54	10000	-
0.75	19	375	3.2	75.71	**BG60Z-../DPE08XB4**	99	16000	-
0.75	16	445	2.7	91.09	**BG60Z-../DPE08XB4**	99	16000	-
0.75	14.5	490	2.4	101.0	**BG60Z-../DPE08XB4**	99	16000	-
0.75	12	590	2.0	119.2	**BG60Z-../DPE08XB4**	99	16000	-
0.75	11	650	1.85	132.1	**BG60Z-../DPE08XB4**	99	16000	-
0.75	9.1	780	1.55	158.0	**BG60Z-../DPE08XB4**	99	16000	-
0.75	8.2	870	1.4	175.1	**BG60Z-../DPE08XB4**	99	16000	-
0.75	7.0	1020	1.2	204.6	**BG60Z-../DPE08XB4**	99	16000	-
0.75	6.3	1130	1.05	226.7	**BG60Z-../DPE08XB4**	99	16000	-
0.75	5.8	1230	0.98	247.7	**BG60Z-../DPE08XB4**	99	16000	-
0.75	5.2	1370	0.88	274.5	**BG60Z-../DPE08XB4**	99	16000	-
0.75	4.7	1390	0.94	306.1	**BG60G20-../DPE08XB4**	106	16000	-
0.75	4.3	1520	0.86	334.3	**BG60G20-../DPE08XB4**	106	16000	-
0.75	9.7	730	3.2	147.2	**BG70Z-../DPE08XB4**	138	20000	-
0.75	8.7	820	2.8	163.8	**BG70Z-../DPE08XB4**	138	20000	-
0.75	7.4	960	2.4	194.4	**BG70Z-../DPE08XB4**	138	20000	-
0.75	6.8	1050	2.2	210.5	**BG70Z-../DPE08XB4**	138	20000	-
0.75	5.8	1230	1.85	249.8	**BG70Z-../DPE08XB4**	138	20000	-
0.75	5.6	1170	2.1	255.5	**BG70G20-../DPE08XB4**	136	20000	-
0.75	5.2	1260	2.0	276.7	**BG70G20-../DPE08XB4**	136	20000	-
0.75	4.4	1490	1.7	328.4	**BG70G20-../DPE08XB4**	136	20000	-
0.75	3.7	1780	1.4	387.6	**BG70G20-../DPE08XB4**	136	20000	-

0.75 kW

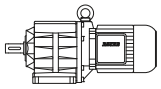

P_N	50 Hz			i	Type	m	F_{RN}	F_{RV}
	n_2	M_2	f_B					
[kW]	[1/min]	[Nm]	[—]	[:1]		[kg]	[N]	[N]
0.75	3.5	1920	1.3	417.8	**BG70G20-../DPE08XB4**	136	20000	-
0.75	2.9	2300	1.1	495.9	**BG70G20-../DPE08XB4**	136	20000	-
0.75	2.5	2700	0.93	577.3	**BG70G20-../DPE08XB4**	136	20000	-
0.75	2.2	3050	0.82	665.8	**BG70G20-../DPE08XB4**	136	20000	-
0.75	4.0	1450	3.2	360.0	**BG80G40-../DPE08XB4**	218	26000	-
0.75	3.6	1610	2.9	399.8	**BG80G40-../DPE08XB4**	218	26000	-
0.75	3.3	1830	2.5	436.2	**BG80G40-../DPE08XB4**	218	26000	-
0.75	3.0	2000	2.3	484.3	**BG80G40-../DPE08XB4**	218	26000	-
0.75	2.5	2450	1.9	572.0	**BG80G40-../DPE08XB4**	218	26000	-
0.75	2.2	2750	1.65	657.8	**BG80G40-../DPE08XB4**	218	26000	-
0.75	2.0	3050	1.5	730.3	**BG80G40-../DPE08XB4**	218	26000	-
0.75	1.8	3450	1.35	817.4	**BG80G40-../DPE08XB4**	218	26000	-
0.75	1.6	3900	1.2	907.6	**BG80G40-../DPE08XB4**	218	26000	-
0.75	1.4	4550	1.0	1042	**BG80G40-../DPE08XB4**	218	26000	-
0.75	1.2	5400	0.85	1261	**BG80G40-../DPE08XB4**	218	26000	-
0.75	2.0	2900	3.2	714.2	**BG90G50-../DPE08XB4**	328	65000	-
0.75	1.7	3500	2.6	883.7	**BG90G50-../DPE08XB4**	328	65000	-
0.75	1.3	4800	1.9	1174	**BG90G50-../DPE08XB4**	328	65000	-
0.75	1.1	5800	1.6	1301	**BG90G50-../DPE08XB4**	328	65000	-
0.75	0.95	6800	1.35	1583	**BG90G50-../DPE08XB4**	328	65000	-
0.75	0.85	7700	1.2	1756	**BG90G50-../DPE08XB4**	328	65000	-
0.75	0.75	8800	1.05	2026	**BG90G50-../DPE08XB4**	328	65000	-
0.75	1.0	5700	3.2	1444	**BG100G50-../DPE08XB4**	514	90000	-
0.75	0.85	6800	2.7	1678	**BG100G50-../DPE08XB4**	514	90000	-
0.75	0.8	7100	2.6	1867	**BG100G50-../DPE08XB4**	514	90000	-
0.75	0.7	8100	2.3	2154	**BG100G50-../DPE08XB4**	514	90000	-
0.75	0.55	10600	1.75	2656	**BG100G50-../DPE08XB4**	514	90000	-
0.75	0.49	12300	1.5	2952	**BG100G50-../DPE08XB4**	514	90000	-
0.75	0.44	13700	1.35	3286	**BG100G50-../DPE08XB4**	514	90000	-
0.75	0.4	15400	1.2	3644	**BG100G50-../DPE08XB4**	514	90000	-

1.1 kW

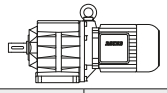

P_N	50 Hz			i	Type	m	F_{RN}	F_{RV}
	n_2	M_2	f_B					
[kW]	[1/min]	[Nm]	[—]	[:1]		[kg]	[N]	[N]
1.1	580	18.1	3.1	2.52	**BG10-../DPE09XA4**	30	570	790
1.1	425	24.5	2.5	3.42	**BG10-../DPE09XA4**	30	630	880
1.1	335	31	2.2	4.36	**BG10-../DPE09XA4**	30	650	910
1.1	270	38.5	1.95	5.34	**BG10-../DPE09XA4**	30	620	910
1.1	215	48.5	1.65	6.78	**BG10-../DPE09XA4**	30	660	920
1.1	210	50	1.75	6.89	**BG10-../DPE09XA4**	30	850	1200
1.1	189	55	1.6	7.63	**BG10-../DPE09XA4**	30	900	1250
1.1	179	58	1.5	8.07	**BG10-../DPE09XA4**	30	660	920
1.1	155	67	1.45	9.33	**BG10-../DPE09XA4**	30	950	1330
1.1	140	75	1.3	10.34	**BG10-../DPE09XA4**	30	1000	1400
1.1	121	86	1.2	11.92	**BG10-../DPE09XA4**	30	1030	1440
1.1	110	95	1.15	13.21	**BG10-../DPE09XA4**	30	1070	1490
1.1	99	106	1.1	14.58	**BG10-../DPE09XA4**	30	1100	1540
1.1	90	116	1.0	16.15	**BG10-../DPE09XA4**	30	1140	1590
1.1	78	134	0.9	18.51	**BG10-../DPE09XA4**	30	1210	1690
1.1	71	147	0.82	20.51	**BG10-../DPE09XA4**	30	1290	1800
1.1	330	31.5	3.3	4.38	**BG20-../DPE09XA4**	32	1990	-
1.1	265	39.5	2.9	5.49	**BG20-../DPE09XA4**	32	2100	-
1.1	240	43.5	2.9	6.06	**BG20-../DPE09XA4**	32	2250	-
1.1	225	46.5	2.6	6.48	**BG20-../DPE09XA4**	32	2250	-
1.1	215	48.5	2.7	6.73	**BG20-../DPE09XA4**	32	2350	2100
1.1	180	58	2.4	8.02	**BG20-../DPE09XA4**	32	2500	-
1.1	174	60	2.0	8.29	**BG20-../DPE09XA4**	32	2250	-
1.1	162	64	2.2	8.91	**BG20-../DPE09XA4**	32	2600	-
1.1	150	70	1.75	9.65	**BG20-../DPE09XA4**	32	2250	-
1.1	137	76	2.0	10.54	**BG20-../DPE09XA4**	32	2700	-
1.1	123	85	1.85	11.71	**BG20-../DPE09XA4**	32	2800	-

1.1 kW

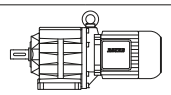

P_N	50 Hz			i	Type	m	F_{RN}	F_{RV}
	n_2	M_2	f_B					
[kW]	[1/min]	[Nm]	[—]	[:1]		[kg]	[N]	[N]
1.1	110	95	1.75	13.21	**BG20-../DPE09XA4**	32	2900	-
1.1	99	106	1.6	14.67	**BG20-../DPE09XA4**	32	3050	-
1.1	93	112	1.6	15.58	**BG20-../DPE09XA4**	32	3100	-
1.1	84	125	1.45	17.31	**BG20-../DPE09XA4**	32	3200	-
1.1	73	143	1.35	19.95	**BG20-../DPE09XA4**	32	3350	-
1.1	65	161	1.25	22.16	**BG20-../DPE09XA4**	32	3500	-
1.1	63	166	1.2	23.22	**BG20-../DPE09XA4**	32	3550	-
1.1	56	187	1.05	25.79	**BG20-../DPE09XA4**	32	3700	-
1.1	52	200	1.0	27.85	**BG20-../DPE09XA4**	32	3800	-
1.1	47	220	0.91	30.94	**BG20-../DPE09XA4**	32	4000	-
1.1	43.5	240	0.83	33.33	**BG20-../DPE09XA4**	32	4100	-
1.1	122	86	3.2	11.82	**BG30-../DPE09XA4**	37	3200	-
1.1	105	100	2.9	13.77	**BG30-../DPE09XA4**	37	3150	-
1.1	95	110	2.7	15.27	**BG30-../DPE09XA4**	37	3450	-
1.1	85	123	2.4	17.06	**BG30-../DPE09XA4**	37	3700	-
1.1	77	136	2.2	18.93	**BG30-../DPE09XA4**	37	4100	-
1.1	73	143	2.1	19.99	**BG30-../DPE09XA4**	37	4200	-
1.1	65	161	1.85	22.18	**BG30-../DPE09XA4**	37	4600	-
1.1	57	184	1.65	25.45	**BG30-../DPE09XA4**	37	4850	-
1.1	51	205	1.45	28.24	**BG30-../DPE09XA4**	37	5100	-
1.1	48.5	215	1.4	29.83	**BG30-../DPE09XA4**	37	5200	-
1.1	44	235	1.3	33.09	**BG30-../DPE09XA4**	37	5400	-
1.1	41	255	1.2	35.17	**BG30-../DPE09XA4**	37	5500	-
1.1	37	280	1.05	39.02	**BG30-../DPE09XA4**	37	5800	-
1.1	34	305	0.98	42.46	**BG30-../DPE09XA4**	37	5900	-
1.1	31	335	0.9	47.11	**BG30-../DPE09XA4**	37	6000	-
1.1	80	131	3.2	18.19	**BG40-../DPE09XA4**	51	5600	-
1.1	73	143	3.0	19.84	**BG40-../DPE09XA4**	51	5800	-
1.1	66	159	2.7	22.02	**BG40-../DPE09XA4**	51	6000	-
1.1	62	169	2.5	23.43	**BG40-../DPE09XA4**	51	6200	-
1.1	56	187	2.3	26.01	**BG40-../DPE09XA4**	51	6500	-
1.1	49.5	210	2.0	29.34	**BG40-../DPE09XA4**	51	6800	-
1.1	44.5	235	1.8	32.57	**BG40-../DPE09XA4**	51	7000	-
1.1	42.5	245	1.75	34.20	**BG40-../DPE09XA4**	51	7000	-
1.1	38	275	1.55	37.96	**BG40-../DPE09XA4**	51	7000	-
1.1	36	290	1.45	40.19	**BG40-../DPE09XA4**	51	7000	-
1.1	32.5	320	1.35	44.62	**BG40-../DPE09XA4**	51	7000	-
1.1	30	350	1.2	48.36	**BG40-../DPE09XA4**	51	7000	-
1.1	27	385	1.1	53.69	**BG40-../DPE09XA4**	51	7000	-
1.1	24.5	425	1.0	59.64	**BG40-../DPE09XA4**	51	7000	-
1.1	22	475	0.89	66.20	**BG40-../DPE09XA4**	51	7000	-
1.1	21.5	485	0.88	67.74	**BG40Z-../DPE09XA4**	55	7000	-
1.1	19.5	530	0.8	75.19	**BG40Z-../DPE09XA4**	55	7000	-
1.1	49	210	3.0	29.62	**BG50-../DPE09XA4**	59	8000	-
1.1	44	235	2.7	32.84	**BG50-../DPE09XA4**	59	8700	-
1.1	38.5	270	2.3	37.89	**BG50-../DPE09XA4**	59	10000	-
1.1	34.5	300	2.1	42.00	**BG50-../DPE09XA4**	59	10000	-
1.1	31	335	1.9	47.02	**BG50-../DPE09XA4**	59	10000	-
1.1	28	375	1.7	52.12	**BG50-../DPE09XA4**	59	10000	-
1.1	24.5	425	1.5	59.42	**BG50-../DPE09XA4**	59	10000	-
1.1	22	475	1.35	65.86	**BG50-../DPE09XA4**	59	10000	-
1.1	20.5	510	1.25	71.97	**BG50Z-../DPE09XA4**	64	10000	-
1.1	18.5	560	1.15	79.78	**BG50Z-../DPE09XA4**	64	10000	-
1.1	15.5	670	0.94	95.58	**BG50Z-../DPE09XA4**	64	10000	-
1.1	14	750	0.84	106.0	**BG50Z-../DPE09XA4**	64	10000	-
1.1	29	360	3.3	50.31	**BG60-../DPE09XA4**	90	16000	-
1.1	26	400	3.0	55.76	**BG60-../DPE09XA4**	90	16000	-
1.1	24	435	2.8	60.90	**BG60-../DPE09XA4**	90	16000	-
1.1	21.5	485	2.5	67.49	**BG60-../DPE09XA4**	90	16000	-
1.1	19.5	530	2.3	75.71	**BG60Z-../DPE09XA4**	109	16000	-
1.1	16	650	1.85	91.09	**BG60Z-../DPE09XA4**	109	16000	-
1.1	14.5	720	1.65	101.0	**BG60Z-../DPE09XA4**	109	16000	-
1.1	12.5	840	1.45	119.2	**BG60Z-../DPE09XA4**	109	16000	-
1.1	11	950	1.25	132.1	**BG60Z-../DPE09XA4**	109	16000	-
1.1	9.2	1140	1.05	158.0	**BG60Z-../DPE09XA4**	109	16000	-
1.1	8.3	1260	0.95	175.1	**BG60Z-../DPE09XA4**	109	16000	-

1.1 kW

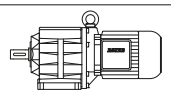

P_N	50 Hz			i	Type	m	F_{RN}	F_{RV}
	n_2	M_2	f_B					
[kW]	[1/min]	[Nm]	[—]	[:1]		[kg]	[N]	[N]
1.1	7.1	1470	0.82	204.6	**BG60Z-../DPE09XA4**	109	16000	-
1.1	13	800	2.9	113.6	**BG70Z-../DPE09XA4**	149	20000	-
1.1	12	870	2.6	124.0	**BG70Z-../DPE09XA4**	149	20000	-
1.1	9.8	1070	2.1	147.2	**BG70Z-../DPE09XA4**	149	20000	-
1.1	8.8	1190	1.95	163.8	**BG70Z-../DPE09XA4**	149	20000	-
1.1	7.5	1400	1.65	194.4	**BG70Z-../DPE09XA4**	149	20000	-
1.1	6.9	1520	1.5	210.5	**BG70Z-../DPE09XA4**	149	20000	-
1.1	5.8	1810	1.25	249.8	**BG70Z-../DPE09XA4**	149	20000	-
1.1	5.7	1730	1.45	255.5	**BG70G20-../DPE09XA4**	146	20000	-
1.1	5.3	1860	1.35	276.7	**BG70G20-../DPE09XA4**	146	20000	-
1.1	4.4	2200	1.15	328.4	**BG70G20-../DPE09XA4**	146	20000	-
1.1	3.8	2600	0.96	387.6	**BG70G20-../DPE09XA4**	146	20000	-
1.1	3.5	2850	0.88	417.8	**BG70G20-../DPE09XA4**	146	20000	-
1.1	7.8	1340	3.1	186.8	**BG80Z-../DPE09XA4**	217	26000	-
1.1	7.0	1500	2.8	207.4	**BG80Z-../DPE09XA4**	217	26000	-
1.1	5.8	1500	3.1	252.3	**BG80G40-../DPE09XA4**	228	26000	-
1.1	5.1	1750	2.6	282.8	**BG80G40-../DPE09XA4**	228	26000	-
1.1	4.6	1940	2.4	314.0	**BG80G40-../DPE09XA4**	228	26000	-
1.1	4.0	2250	2.0	360.0	**BG80G40-../DPE09XA4**	228	26000	-
1.1	3.7	2450	1.9	399.8	**BG80G40-../DPE09XA4**	228	26000	-
1.1	3.4	2750	1.65	436.2	**BG80G40-../DPE09XA4**	228	26000	-
1.1	3.0	3100	1.5	484.3	**BG80G40-../DPE09XA4**	228	26000	-
1.1	2.6	3650	1.25	572.0	**BG80G40-../DPE09XA4**	228	26000	-
1.1	2.2	4250	1.1	657.8	**BG80G40-../DPE09XA4**	228	26000	-
1.1	2.0	4750	0.97	730.3	**BG80G40-../DPE09XA4**	228	26000	-
1.1	1.8	5300	0.87	817.4	**BG80G40-../DPE09XA4**	228	26000	-
1.1	2.9	3100	3.0	504.7	**BG90G50-../DPE09XA4**	338	65000	-
1.1	2.5	3600	2.6	588.8	**BG90G50-../DPE09XA4**	338	65000	-
1.1	2.3	3950	2.3	644.7	**BG90G50-../DPE09XA4**	338	65000	-
1.1	2.1	4350	2.1	714.2	**BG90G50-../DPE09XA4**	338	65000	-
1.1	1.7	5500	1.65	883.7	**BG90G50-../DPE09XA4**	338	65000	-
1.1	1.3	7400	1.25	1174	**BG90G50-../DPE09XA4**	338	65000	-
1.1	1.2	8000	1.15	1301	**BG90G50-../DPE09XA4**	338	65000	-
1.1	1.8	5800	3.2	845.1	**BG100Z-../DPE09XA4**	526	90000	-
1.1	1.4	6100	3.0	1043	**BG100G50-../DPE09XA4**	525	90000	-
1.1	1.2	7100	2.6	1204	**BG100G50-../DPE09XA4**	525	90000	-
1.1	1.0	9100	2.0	1444	**BG100G50-../DPE09XA4**	525	90000	-
1.1	0.9	10000	1.85	1678	**BG100G50-../DPE09XA4**	525	90000	-
1.1	0.8	11300	1.65	1867	**BG100G50-../DPE09XA4**	525	90000	-
1.1	0.7	12900	1.45	2154	**BG100G50-../DPE09XA4**	525	90000	-
1.1	0.55	16700	1.1	2656	**BG100G50-../DPE09XA4**	525	90000	-

1.5 kW

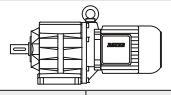

P_N	50 Hz			i	Type	m	F_{RN}	F_{RV}
	n_2	M_2	f_B					
[kW]	[1/min]	[Nm]	[—]	[:1]		[kg]	[N]	[N]
1.5	570	25	2.2	2.52	**BG10-../DPE09XB4**	30	570	790
1.5	420	34	1.8	3.42	**BG10-../DPE09XB4**	30	630	880
1.5	330	43	1.6	4.36	**BG10-../DPE09XB4**	30	650	910
1.5	270	53	1.4	5.34	**BG10-../DPE09XB4**	30	620	910
1.5	215	66	1.25	6.78	**BG10-../DPE09XB4**	30	660	920
1.5	210	68	1.3	6.89	**BG10-../DPE09XB4**	30	850	1200
1.5	189	75	1.2	7.63	**BG10-../DPE09XB4**	30	900	1250
1.5	178	80	1.1	8.07	**BG10-../DPE09XB4**	30	660	920
1.5	154	93	1.05	9.33	**BG10-../DPE09XB4**	30	950	1330
1.5	139	103	0.96	10.34	**BG10-../DPE09XB4**	30	1000	1400
1.5	121	118	0.89	11.92	**BG10-../DPE09XB4**	30	1030	1440
1.5	109	131	0.84	13.21	**BG10-../DPE09XB4**	30	1070	1490
1.5	435	32.5	2.8	3.33	**BG20-../DPE09XB4**	32	1830	-
1.5	330	43	2.4	4.38	**BG20-../DPE09XB4**	32	1990	-
1.5	265	54	2.1	5.49	**BG20-../DPE09XB4**	32	2100	-

1.5 kW

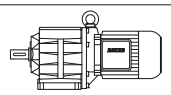

P_N	50 Hz			i	Type	m	F_{RN}	F_{RV}
	n_2	M_2	f_B					
[kW]	[1/min]	[Nm]	[—]	[:1]		[kg]	[N]	[N]
1.5	240	59	2.1	6.06	**BG20-../DPE09XB4**	32	2250	-
1.5	225	63	1.95	6.48	**BG20-../DPE09XB4**	32	2250	-
1.5	215	66	1.95	6.73	**BG20-../DPE09XB4**	32	2350	2100
1.5	179	80	1.7	8.02	**BG20-../DPE09XB4**	32	2500	-
1.5	174	82	1.5	8.29	**BG20-../DPE09XB4**	32	2250	-
1.5	162	88	1.65	8.91	**BG20-../DPE09XB4**	32	2600	-
1.5	149	96	1.25	9.65	**BG20-../DPE09XB4**	32	2250	-
1.5	137	104	1.5	10.54	**BG20-../DPE09XB4**	32	2700	-
1.5	123	116	1.35	11.71	**BG20-../DPE09XB4**	32	2800	-
1.5	109	131	1.25	13.21	**BG20-../DPE09XB4**	32	2900	-
1.5	98	146	1.2	14.67	**BG20-../DPE09XB4**	32	3050	-
1.5	93	154	1.15	15.58	**BG20-../DPE09XB4**	32	3100	-
1.5	83	172	1.05	17.31	**BG20-../DPE09XB4**	32	3200	-
1.5	72	198	0.98	19.95	**BG20-../DPE09XB4**	32	3350	-
1.5	65	220	0.91	22.16	**BG20-../DPE09XB4**	32	3500	-
1.5	62	230	0.87	23.22	**BG20-../DPE09XB4**	32	3550	-
1.5	215	66	3.3	6.75	**BG30-../DPE09XB4**	37	1760	-
1.5	192	74	3.1	7.50	**BG30-../DPE09XB4**	37	2750	-
1.5	182	78	2.8	7.91	**BG30-../DPE09XB4**	37	1760	-
1.5	167	85	2.9	8.60	**BG30-../DPE09XB4**	37	2800	-
1.5	151	94	2.7	9.55	**BG30-../DPE09XB4**	37	3000	-
1.5	135	106	2.5	10.65	**BG30-../DPE09XB4**	37	2950	-
1.5	122	117	2.3	11.82	**BG30-../DPE09XB4**	37	3200	-
1.5	105	136	2.2	13.77	**BG30-../DPE09XB4**	37	3150	-
1.5	94	152	1.95	15.27	**BG30-../DPE09XB4**	37	3450	-
1.5	85	168	1.8	17.06	**BG30-../DPE09XB4**	37	3700	-
1.5	76	188	1.6	18.93	**BG30-../DPE09XB4**	37	4100	-
1.5	72	198	1.5	19.99	**BG30-../DPE09XB4**	37	4200	-
1.5	65	220	1.35	22.18	**BG30-../DPE09XB4**	37	4600	-
1.5	57	250	1.2	25.45	**BG30-../DPE09XB4**	37	4850	-
1.5	51	280	1.05	28.24	**BG30-../DPE09XB4**	37	5100	-
1.5	48.5	295	1.0	29.83	**BG30-../DPE09XB4**	37	5200	-
1.5	43.5	325	0.92	33.09	**BG30-../DPE09XB4**	37	5400	-
1.5	41	345	0.87	35.17	**BG30-../DPE09XB4**	37	5500	-
1.5	160	89	3.3	9.00	**BG40-../DPE09XB4**	51	2650	-
1.5	112	127	3.2	12.86	**BG40-../DPE09XB4**	51	4500	-
1.5	101	141	3.0	14.28	**BG40-../DPE09XB4**	51	4900	-
1.5	88	162	2.6	16.39	**BG40-../DPE09XB4**	51	5300	-
1.5	79	181	2.3	18.19	**BG40-../DPE09XB4**	51	5600	-
1.5	73	196	2.2	19.84	**BG40-../DPE09XB4**	51	5800	-
1.5	66	215	2.0	22.02	**BG40-../DPE09XB4**	51	6000	-
1.5	62	230	1.85	23.43	**BG40-../DPE09XB4**	51	6200	-
1.5	56	255	1.65	26.01	**BG40-../DPE09XB4**	51	6500	-
1.5	49	290	1.45	29.34	**BG40-../DPE09XB4**	51	6800	-
1.5	44.5	320	1.35	32.57	**BG40-../DPE09XB4**	51	7000	-
1.5	42	340	1.25	34.20	**BG40-../DPE09XB4**	51	7000	-
1.5	38	375	1.15	37.96	**BG40-../DPE09XB4**	51	7000	-
1.5	36	395	1.1	40.19	**BG40-../DPE09XB4**	51	7000	-
1.5	32.5	440	0.97	44.62	**BG40-../DPE09XB4**	51	7000	-
1.5	30	475	0.89	48.36	**BG40-../DPE09XB4**	51	7000	-
1.5	27	530	0.8	53.69	**BG40-../DPE09XB4**	51	7000	-
1.5	66	215	2.9	21.96	**BG50-../DPE09XB4**	59	8000	-
1.5	59	240	2.6	24.34	**BG50-../DPE09XB4**	59	8700	-
1.5	48.5	295	2.1	29.62	**BG50-../DPE09XB4**	59	8000	-
1.5	44	325	1.95	32.84	**BG50-../DPE09XB4**	59	8700	-
1.5	38	375	1.7	37.89	**BG50-../DPE09XB4**	59	10000	-
1.5	34.5	415	1.5	42.00	**BG50-../DPE09XB4**	59	10000	-
1.5	31	460	1.35	47.02	**BG50-../DPE09XB4**	59	10000	-
1.5	28	510	1.25	52.12	**BG50-../DPE09XB4**	59	10000	-
1.5	24.5	580	1.1	59.42	**BG50-../DPE09XB4**	59	10000	-
1.5	22	650	0.97	65.86	**BG50-../DPE09XB4**	59	10000	-
1.5	20	710	0.89	71.97	**BG50Z-../DPE09XB4**	64	10000	-
1.5	18	790	0.8	79.78	**BG50Z-../DPE09XB4**	64	10000	-
1.5	37	385	3.1	38.85	**BG60-../DPE09XB4**	90	16000	-
1.5	33.5	425	2.8	43.05	**BG60-../DPE09XB4**	90	16000	-
1.5	29	490	2.4	50.31	**BG60-../DPE09XB4**	90	16000	-

1.5 kW

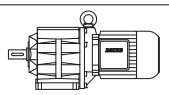

P_N	50 Hz			i	Type	m	F_{RN}	F_{RV}
	n_2	M_2	f_B					
[kW]	[1/min]	[Nm]	[—]	[:1]		[kg]	[N]	[N]
1.5	26	550	2.2	55.76	**BG60-../DPE09XB4**	90	16000	-
1.5	24	590	2.0	60.90	**BG60-../DPE09XB4**	90	16000	-
1.5	21.5	660	1.8	67.49	**BG60-../DPE09XB4**	90	16000	-
1.5	19	750	1.6	75.71	**BG60Z-../DPE09XB4**	109	16000	-
1.5	16	890	1.35	91.09	**BG60Z-../DPE09XB4**	109	16000	-
1.5	14.5	980	1.2	101.0	**BG60Z-../DPE09XB4**	109	16000	-
1.5	12.5	1140	1.05	119.2	**BG60Z-../DPE09XB4**	109	16000	-
1.5	11	1300	0.92	132.1	**BG60Z-../DPE09XB4**	109	16000	-
1.5	19.5	730	3.2	73.82	**BG70Z-../DPE09XB4**	149	20000	-
1.5	16.5	860	2.7	87.61	**BG70Z-../DPE09XB4**	149	20000	-
1.5	15	950	2.4	95.74	**BG70Z-../DPE09XB4**	149	20000	-
1.5	13	1100	2.1	113.6	**BG70Z-../DPE09XB4**	149	20000	-
1.5	12	1190	1.95	124.0	**BG70Z-../DPE09XB4**	149	20000	-
1.5	9.8	1460	1.6	147.2	**BG70Z-../DPE09XB4**	149	20000	-
1.5	8.8	1620	1.4	163.8	**BG70Z-../DPE09XB4**	149	20000	-
1.5	7.4	1930	1.2	194.4	**BG70Z-../DPE09XB4**	149	20000	-
1.5	6.9	2050	1.1	210.5	**BG70Z-../DPE09XB4**	149	20000	-
1.5	5.8	2450	0.94	249.8	**BG70Z-../DPE09XB4**	149	20000	-
1.5	5.7	2400	1.05	255.5	**BG70G20-../DPE09XB4**	146	20000	-
1.5	5.2	2600	0.96	276.7	**BG70G20-../DPE09XB4**	146	20000	-
1.5	4.4	3100	0.81	328.4	**BG70G20-../DPE09XB4**	146	20000	-
1.5	9.9	1440	2.9	145.4	**BG80Z-../DPE09XB4**	217	26000	-
1.5	8.9	1600	2.6	161.5	**BG80Z-../DPE09XB4**	217	26000	-
1.5	7.7	1860	2.3	186.8	**BG80Z-../DPE09XB4**	217	26000	-
1.5	7.0	2000	2.1	207.4	**BG80Z-../DPE09XB4**	217	26000	-
1.5	6.4	1950	2.4	227.2	**BG80G40-../DPE09XB4**	228	26000	-
1.5	5.7	2200	2.1	252.3	**BG80G40-../DPE09XB4**	228	26000	-
1.5	5.1	2500	1.85	282.8	**BG80G40-../DPE09XB4**	228	26000	-
1.5	4.6	2750	1.65	314.0	**BG80G40-../DPE09XB4**	228	26000	-
1.5	4.0	3200	1.45	360.0	**BG80G40-../DPE09XB4**	228	26000	-
1.5	3.6	3600	1.3	399.8	**BG80G40-../DPE09XB4**	228	26000	-
1.5	3.3	4000	1.15	436.2	**BG80G40-../DPE09XB4**	228	26000	-
1.5	3.0	4350	1.05	484.3	**BG80G40-../DPE09XB4**	228	26000	-
1.5	2.6	5100	0.9	572.0	**BG80G40-../DPE09XB4**	228	26000	-
1.5	4.0	3100	3.0	360.3	**BG90G50-../DPE09XB4**	338	65000	-
1.5	3.3	3950	2.3	435.8	**BG90G50-../DPE09XB4**	338	65000	-
1.5	2.9	4450	2.1	504.7	**BG90G50-../DPE09XB4**	338	65000	-
1.5	2.5	5100	1.8	588.8	**BG90G50-../DPE09XB4**	338	65000	-
1.5	2.3	5600	1.65	644.7	**BG90G50-../DPE09XB4**	338	65000	-
1.5	2.1	6100	1.5	714.2	**BG90G50-../DPE09XB4**	338	65000	-
1.5	1.7	7700	1.2	883.7	**BG90G50-../DPE09XB4**	338	65000	-
1.5	1.3	10300	0.89	1174	**BG90G50-../DPE09XB4**	338	65000	-
1.5	1.2	11200	0.82	1301	**BG90G50-../DPE09XB4**	338	65000	-
1.5	2.5	5700	3.2	591.1	**BG100Z-../DPE09XB4**	526	90000	-
1.5	2.2	6500	2.8	658.1	**BG100Z-../DPE09XB4**	526	90000	-
1.5	1.9	7500	2.5	759.0	**BG100Z-../DPE09XB4**	526	90000	-
1.5	1.7	8400	2.2	845.1	**BG100Z-../DPE09XB4**	526	90000	-
1.5	1.5	7900	2.3	976.1	**BG100G50-../DPE09XB4**	525	90000	-
1.5	1.4	8800	2.1	1043	**BG100G50-../DPE09XB4**	525	90000	-
1.5	1.2	10300	1.8	1204	**BG100G50-../DPE09XB4**	525	90000	-
1.5	1.0	12900	1.45	1444	**BG100G50-../DPE09XB4**	525	90000	-
1.5	0.9	14300	1.3	1678	**BG100G50-../DPE09XB4**	525	90000	-
1.5	0.8	16100	1.15	1867	**BG100G50-../DPE09XB4**	525	90000	-
1.5	0.7	18400	1.0	2154	**BG100G50-../DPE09XB4**	525	90000	-

2.2 kW

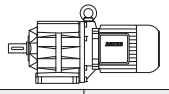

P_N	50 Hz			i	Type	m	F_{RN}	F_{RV}
	n_2	M_2	f_B					
[kW]	[1/min]	[Nm]	[—]	[:1]		[kg]	[N]	[N]
2.2	580	36	1.55	2.52	**BG10-../DPE09XB4C**	30	570	790
2.2	425	49	1.25	3.42	**BG10-../DPE09XB4C**	30	630	880
2.2	335	62	1.1	4.36	**BG10-../DPE09XB4C**	30	650	910

2.2 kW

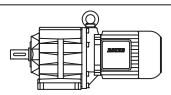

P_N	50 Hz			i	Type	m	F_{RN}	F_{RV}
	n_2	M_2	f_B					
[kW]	[1/min]	[Nm]	[—]	[:1]		[kg]	[N]	[N]
2.2	275	76	0.99	5.34	**BG10-../DPE09XB4C**	30	620	910
2.2	215	97	0.91	6.89	**BG10-../DPE09XB4C**	30	850	1200
2.2	191	110	0.81	7.63	**BG10-../DPE09XB4C**	30	900	1250
2.2	580	36	2.3	2.52	**BG20-../DPE09XB4C**	32	1650	-
2.2	440	47.5	1.95	3.33	**BG20-../DPE09XB4C**	32	1830	-
2.2	335	62	1.7	4.38	**BG20-../DPE09XB4C**	32	1990	-
2.2	265	79	1.45	5.49	**BG20-../DPE09XB4C**	32	2100	-
2.2	240	87	1.45	6.06	**BG20-../DPE09XB4C**	32	2250	-
2.2	225	93	1.3	6.48	**BG20-../DPE09XB4C**	32	2250	-
2.2	220	95	1.35	6.73	**BG20-../DPE09XB4C**	32	2350	2100
2.2	181	116	1.2	8.02	**BG20-../DPE09XB4C**	32	2500	-
2.2	175	120	1.0	8.29	**BG20-../DPE09XB4C**	32	2250	-
2.2	163	128	1.1	8.91	**BG20-../DPE09XB4C**	32	2600	-
2.2	151	139	0.88	9.65	**BG20-../DPE09XB4C**	32	2250	-
2.2	138	152	1.0	10.54	**BG20-../DPE09XB4C**	32	2700	-
2.2	124	169	0.93	11.71	**BG20-../DPE09XB4C**	32	2800	-
2.2	110	191	0.87	13.21	**BG20-../DPE09XB4C**	32	2900	-
2.2	99	210	0.82	14.67	**BG20-../DPE09XB4C**	32	3050	-
2.2	94	220	0.8	15.58	**BG20-../DPE09XB4C**	32	3100	-
2.2	430	48.5	2.9	3.40	**BG30-../DPE09XB4C**	37	1580	-
2.2	345	60	2.9	4.21	**BG30-../DPE09XB4C**	37	1630	-
2.2	270	77	2.6	5.44	**BG30-../DPE09XB4C**	37	1670	-
2.2	215	97	2.3	6.76	**BG30-../DPE09XB4C**	37	2550	-
2.2	194	108	2.1	7.50	**BG30-../DPE09XB4C**	37	2750	-
2.2	184	114	1.9	7.91	**BG30-../DPE09XB4C**	37	1760	-
2.2	169	124	2.0	8.60	**BG30-../DPE09XB4C**	37	2800	-
2.2	152	138	1.85	9.55	**BG30-../DPE09XB4C**	37	3000	-
2.2	137	153	1.75	10.65	**BG30-../DPE09XB4C**	37	2950	-
2.2	123	170	1.6	11.82	**BG30-../DPE09XB4C**	37	3200	-
2.2	106	198	1.5	13.77	**BG30-../DPE09XB4C**	37	3150	-
2.2	95	220	1.35	15.27	**BG30-../DPE09XB4C**	37	3450	-
2.2	85	245	1.2	17.06	**BG30-../DPE09XB4C**	37	3700	-
2.2	77	270	1.1	18.93	**BG30-../DPE09XB4C**	37	4100	-
2.2	73	285	1.05	19.99	**BG30-../DPE09XB4C**	37	4200	-
2.2	66	315	0.95	22.18	**BG30-../DPE09XB4C**	37	4600	-
2.2	57	365	0.82	25.45	**BG30-../DPE09XB4C**	37	4850	-
2.2	235	89	3.3	6.29	**BG40-../DPE09XB4C**	51	2600	-
2.2	205	102	3.2	7.11	**BG40-../DPE09XB4C**	51	3950	-
2.2	191	110	2.7	7.62	**BG40-../DPE09XB4C**	51	2650	-
2.2	175	120	2.9	8.31	**BG40-../DPE09XB4C**	51	4100	-
2.2	162	129	2.3	9.00	**BG40-../DPE09XB4C**	51	2650	-
2.2	158	132	2.7	9.23	**BG40-../DPE09XB4C**	51	4350	-
2.2	141	149	2.5	10.35	**BG40-../DPE09XB4C**	51	4350	-
2.2	127	165	2.4	11.49	**BG40-../DPE09XB4C**	51	4600	-
2.2	113	185	2.2	12.86	**BG40-../DPE09XB4C**	51	4500	-
2.2	102	205	2.1	14.28	**BG40-../DPE09XB4C**	51	4900	-
2.2	89	235	1.8	16.39	**BG40-../DPE09XB4C**	51	5300	-
2.2	80	260	1.65	18.19	**BG40-../DPE09XB4C**	51	5600	-
2.2	74	280	1.5	19.84	**BG40-../DPE09XB4C**	51	5800	-
2.2	66	315	1.35	22.02	**BG40-../DPE09XB4C**	51	6000	-
2.2	62	335	1.25	23.43	**BG40-../DPE09XB4C**	51	6200	-
2.2	56	375	1.15	26.01	**BG40-../DPE09XB4C**	51	6500	-
2.2	49.5	420	1.0	29.34	**BG40-../DPE09XB4C**	51	6800	-
2.2	45	465	0.91	32.57	**BG40-../DPE09XB4C**	51	7000	-
2.2	42.5	490	0.87	34.20	**BG40-../DPE09XB4C**	51	7000	-
2.2	121	173	3.3	12.06	**BG50-../DPE09XB4C**	59	5700	-
2.2	109	192	3.1	13.36	**BG50-../DPE09XB4C**	59	6100	-
2.2	88	235	2.7	16.53	**BG50-../DPE09XB4C**	59	6500	-
2.2	80	260	2.4	18.33	**BG50-../DPE09XB4C**	59	7200	-
2.2	67	310	2.0	21.96	**BG50-../DPE09XB4C**	59	8000	-
2.2	60	350	1.8	24.34	**BG50-../DPE09XB4C**	59	8700	-
2.2	49	425	1.5	29.62	**BG50-../DPE09XB4C**	59	8000	-
2.2	44.5	470	1.35	32.84	**BG50-../DPE09XB4C**	59	8700	-
2.2	38.5	540	1.15	37.89	**BG50-../DPE09XB4C**	59	10000	-
2.2	35	600	1.05	42.00	**BG50-../DPE09XB4C**	59	10000	-
2.2	31	670	0.94	47.02	**BG50-../DPE09XB4C**	59	10000	-

2.2 kW

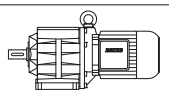

P_N	50 Hz			i	Type	m	F_{RN}	F_{RV}
	n_2	M_2	f_B					
[kW]	[1/min]	[Nm]	[—]	[:1]		[kg]	[N]	[N]
2.2	28	750	0.84	52.12	**BG50-../DPE09XB4C**	59	10000	-
2.2	49.5	420	2.9	29.31	**BG60-../DPE09XB4C**	90	14800	-
2.2	45	465	2.6	32.48	**BG60-../DPE09XB4C**	90	15400	-
2.2	37.5	560	2.1	38.85	**BG60-../DPE09XB4C**	90	16000	-
2.2	34	610	1.95	43.05	**BG60-../DPE09XB4C**	90	16000	-
2.2	29	720	1.65	50.31	**BG60-../DPE09XB4C**	90	16000	-
2.2	26.5	790	1.5	55.76	**BG60-../DPE09XB4C**	90	16000	-
2.2	24	870	1.4	60.90	**BG60-../DPE09XB4C**	90	16000	-
2.2	21.5	970	1.25	67.49	**BG60-../DPE09XB4C**	90	16000	-
2.2	19.5	1070	1.1	75.71	**BG60Z-../DPE09XB4C**	109	16000	-
2.2	16	1310	0.92	91.09	**BG60Z-../DPE09XB4C**	109	16000	-
2.2	14.5	1440	0.83	101.0	**BG60Z-../DPE09XB4C**	109	16000	-
2.2	29	720	3.2	50.40	**BG70-../DPE09XB4C**	128	20000	-
2.2	24.5	850	2.7	59.82	**BG70-../DPE09XB4C**	128	20000	-
2.2	22.5	930	2.5	64.85	**BG70Z-../DPE09XB4C**	149	20000	-
2.2	20	1050	2.2	73.82	**BG70Z-../DPE09XB4C**	149	20000	-
2.2	17	1230	1.85	87.61	**BG70Z-../DPE09XB4C**	149	20000	-
2.2	15.5	1350	1.7	95.74	**BG70Z-../DPE09XB4C**	149	20000	-
2.2	13	1610	1.45	113.6	**BG70Z-../DPE09XB4C**	149	20000	-
2.2	12	1750	1.3	124.0	**BG70Z-../DPE09XB4C**	149	20000	-
2.2	9.9	2100	1.1	147.2	**BG70Z-../DPE09XB4C**	149	20000	-
2.2	8.9	2350	0.98	163.8	**BG70Z-../DPE09XB4C**	149	20000	-
2.2	7.5	2800	0.82	194.4	**BG70Z-../DPE09XB4C**	149	20000	-
2.2	15.5	1350	3.1	93.89	**BG80Z-../DPE09XB4C**	217	26000	-
2.2	13	1610	2.6	112.4	**BG80Z-../DPE09XB4C**	217	26000	-
2.2	12	1750	2.4	124.8	**BG80Z-../DPE09XB4C**	217	26000	-
2.2	10	2100	2.0	145.4	**BG80Z-../DPE09XB4C**	217	26000	-
2.2	9.0	2300	1.85	161.5	**BG80Z-../DPE09XB4C**	217	26000	-
2.2	7.8	2650	1.6	186.8	**BG80Z-../DPE09XB4C**	217	26000	-
2.2	7.0	3000	1.4	207.4	**BG80Z-../DPE09XB4C**	217	26000	-
2.2	6.4	3000	1.55	227.2	**BG80G40-../DPE09XB4C**	228	26000	-
2.2	5.8	3300	1.4	252.3	**BG80G40-../DPE09XB4C**	228	26000	-
2.2	5.2	3700	1.25	282.8	**BG80G40-../DPE09XB4C**	228	26000	-
2.2	4.7	4100	1.1	314.0	**BG80G40-../DPE09XB4C**	228	26000	-
2.2	4.1	4750	0.97	360.0	**BG80G40-../DPE09XB4C**	228	26000	-
2.2	3.7	5300	0.87	399.8	**BG80G40-../DPE09XB4C**	228	26000	-
2.2	8.2	2550	3.3	178.5	**BG90Z-../DPE09XB4C**	327	65000	-
2.2	7.0	3000	2.8	208.3	**BG90Z-../DPE09XB4C**	327	65000	-
2.2	6.4	3250	2.6	228.1	**BG90Z-../DPE09XB4C**	327	65000	-
2.2	5.6	3300	2.8	262.5	**BG90G50-../DPE09XB4C**	338	65000	-
2.2	4.9	4000	2.3	298.8	**BG90G50-../DPE09XB4C**	338	65000	-
2.2	4.1	4600	2.0	360.3	**BG90G50-../DPE09XB4C**	338	65000	-
2.2	3.4	5700	1.6	435.8	**BG90G50-../DPE09XB4C**	338	65000	-
2.2	2.9	6700	1.35	504.7	**BG90G50-../DPE09XB4C**	338	65000	-
2.2	2.5	7800	1.2	588.8	**BG90G50-../DPE09XB4C**	338	65000	-
2.2	2.3	8500	1.1	644.7	**BG90G50-../DPE09XB4C**	338	65000	-
2.2	2.1	9300	0.99	714.2	**BG90G50-../DPE09XB4C**	338	65000	-
2.2	3.2	6500	2.8	456.7	**BG100Z-../DPE09XB4C**	526	90000	-
2.2	2.9	7200	2.6	508.5	**BG100Z-../DPE09XB4C**	526	90000	-
2.2	2.5	8400	2.2	591.1	**BG100Z-../DPE09XB4C**	526	90000	-
2.2	2.3	9100	2.0	658.1	**BG100Z-../DPE09XB4C**	526	90000	-
2.2	2.0	10500	1.75	759.0	**BG100Z-../DPE09XB4C**	526	90000	-
2.2	1.8	11600	1.6	845.1	**BG100Z-../DPE09XB4C**	526	90000	-
2.2	1.5	12400	1.5	976.1	**BG100G50-../DPE09XB4C**	525	90000	-
2.2	1.4	13600	1.35	1043	**BG100G50-../DPE09XB4C**	525	90000	-
2.2	1.3	14500	1.3	1204	**BG100G50-../DPE09XB4C**	525	90000	-
2.2	1.1	17700	1.05	1444	**BG100G50-../DPE09XB4C**	525	90000	-

3 kW

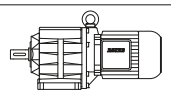

P_N	50 Hz			i	Type	m	F_{RN}	F_{RV}
	n_2	M_2	f_B					
[kW]	[1/min]	[Nm]	[—]	[:1]		[kg]	[N]	[N]
3	550	52	2.5	2.67	**BG30-../DPE11LA4**	58	1450	-
3	430	66	2.1	3.40	**BG30-../DPE11LA4**	58	1580	-
3	350	81	2.1	4.21	**BG30-../DPE11LA4**	58	1630	-
3	270	106	1.9	5.44	**BG30-../DPE11LA4**	58	1670	-
3	220	130	1.75	6.76	**BG30-../DPE11LA4**	58	2550	-
3	194	147	1.55	7.50	**BG30-../DPE11LA4**	58	2750	-
3	184	155	1.4	7.91	**BG30-../DPE11LA4**	58	1760	-
3	170	168	1.45	8.60	**BG30-../DPE11LA4**	58	2800	-
3	153	187	1.35	9.55	**BG30-../DPE11LA4**	58	3000	-
3	137	205	1.3	10.65	**BG30-../DPE11LA4**	58	2950	-
3	124	230	1.2	11.82	**BG30-../DPE11LA4**	58	3200	-
3	106	270	1.1	13.77	**BG30-../DPE11LA4**	58	3150	-
3	96	295	1.0	15.27	**BG30-../DPE11LA4**	58	3450	-
3	86	330	0.91	17.06	**BG30-../DPE11LA4**	58	3700	-
3	77	370	0.81	18.93	**BG30-../DPE11LA4**	58	4100	-
3	370	77	3.2	3.97	**BG40-../DPE11LA4**	77	2400	-
3	295	97	2.8	4.94	**BG40-../DPE11LA4**	77	2450	-
3	235	121	2.4	6.29	**BG40-../DPE11LA4**	77	2600	-
3	230	124	2.5	6.40	**BG40-../DPE11LA4**	77	3750	-
3	205	139	2.3	7.11	**BG40-../DPE11LA4**	77	3950	-
3	191	150	1.95	7.62	**BG40-../DPE11LA4**	77	2650	-
3	176	162	2.1	8.31	**BG40-../DPE11LA4**	77	4100	-
3	162	176	1.7	9.00	**BG40-../DPE11LA4**	77	2650	-
3	158	181	1.95	9.23	**BG40-../DPE11LA4**	77	4350	-
3	141	200	1.9	10.35	**BG40-../DPE11LA4**	77	4350	-
3	127	225	1.75	11.49	**BG40-../DPE11LA4**	77	4600	-
3	114	250	1.65	12.86	**BG40-../DPE11LA4**	77	4500	-
3	102	280	1.5	14.28	**BG40-../DPE11LA4**	77	4900	-
3	89	320	1.35	16.39	**BG40-../DPE11LA4**	77	5300	-
3	80	355	1.2	18.19	**BG40-../DPE11LA4**	77	5600	-
3	74	385	1.1	19.84	**BG40-../DPE11LA4**	77	5800	-
3	67	425	1.0	22.02	**BG40-../DPE11LA4**	77	6000	-
3	63	450	0.94	23.43	**BG40-../DPE11LA4**	77	6200	-
3	56	510	0.83	26.01	**BG40-../DPE11LA4**	77	6500	-
3	168	170	3.0	8.70	**BG50-../DPE11LA4**	86	5300	-
3	151	189	2.8	9.65	**BG50-../DPE11LA4**	86	5600	-
3	121	235	2.5	12.06	**BG50-../DPE11LA4**	86	5700	-
3	109	260	2.3	13.36	**BG50-../DPE11LA4**	86	6100	-
3	89	320	1.95	16.53	**BG50-../DPE11LA4**	86	6500	-
3	80	355	1.75	18.33	**BG50-../DPE11LA4**	86	7200	-
3	67	425	1.5	21.96	**BG50-../DPE11LA4**	86	8000	-
3	60	475	1.35	24.34	**BG50-../DPE11LA4**	86	8700	-
3	49.5	570	1.1	29.62	**BG50-../DPE11LA4**	86	8000	-
3	44.5	640	0.98	32.84	**BG50-../DPE11LA4**	86	8700	-
3	38.5	740	0.85	37.89	**BG50-../DPE11LA4**	86	10000	-
3	79	360	3.2	18.62	**BG60-../DPE11LA4**	119	12400	-
3	65	440	2.7	22.40	**BG60-../DPE11LA4**	119	13300	-
3	59	485	2.5	24.82	**BG60-../DPE11LA4**	119	13800	-
3	50	570	2.1	29.31	**BG60-../DPE11LA4**	119	14800	-
3	45	630	1.9	32.48	**BG60-../DPE11LA4**	119	15400	-
3	37.5	760	1.6	38.85	**BG60-../DPE11LA4**	119	16000	-
3	34	840	1.45	43.05	**BG60-../DPE11LA4**	119	16000	-
3	29	980	1.2	50.31	**BG60-../DPE11LA4**	119	16000	-
3	26.5	1080	1.1	55.76	**BG60-../DPE11LA4**	119	16000	-
3	24	1190	1.0	60.90	**BG60-../DPE11LA4**	119	16000	-
3	22	1300	0.92	67.49	**BG60-../DPE11LA4**	119	16000	-
3	21.5	1330	0.9	68.32	**BG60Z-../DPE11LA4**	135	16000	-
3	19.5	1460	0.82	75.71	**BG60Z-../DPE11LA4**	135	16000	-
3	41.5	690	3.3	35.24	**BG70-../DPE11LA4**	149	18300	-
3	37.5	760	3.0	39.22	**BG70-../DPE11LA4**	149	19100	-
3	31.5	900	2.6	46.54	**BG70-../DPE11LA4**	149	20000	-
3	29	980	2.3	50.40	**BG70-../DPE11LA4**	149	20000	-
3	24.5	1160	2.0	59.82	**BG70-../DPE11LA4**	149	20000	-
3	22.5	1270	1.8	64.85	**BG70Z-../DPE11LA4**	176	20000	-
3	20	1430	1.6	73.82	**BG70Z-../DPE11LA4**	176	20000	-
3	17	1680	1.35	87.61	**BG70Z-../DPE11LA4**	176	20000	-

3 kW

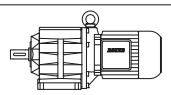

P_N	50 Hz			i	Type	m	F_{RN}	F_{RV}
	n_2	M_2	f_B					
[kW]	[1/min]	[Nm]	[—]	[:1]		[kg]	[N]	[N]
3	15.5	1840	1.25	95.74	**BG70Z-../DPE11LA4**	176	20000	-
3	13	2200	1.05	113.6	**BG70Z-../DPE11LA4**	176	20000	-
3	12	2350	0.98	124.0	**BG70Z-../DPE11LA4**	176	20000	-
3	9.9	2850	0.81	147.2	**BG70Z-../DPE11LA4**	176	20000	-
3	22	1300	3.2	66.40	**BG80Z-../DPE11LA4**	246	26000	-
3	20	1430	2.9	73.73	**BG80Z-../DPE11LA4**	246	26000	-
3	17.5	1630	2.6	84.55	**BG80Z-../DPE11LA4**	246	26000	-
3	15.5	1840	2.3	93.89	**BG80Z-../DPE11LA4**	246	26000	-
3	13	2200	1.9	112.4	**BG80Z-../DPE11LA4**	246	26000	-
3	12	2350	1.8	124.8	**BG80Z-../DPE11LA4**	246	26000	-
3	10.5	2700	1.55	145.4	**BG80Z-../DPE11LA4**	246	26000	-
3	9.1	3100	1.35	161.5	**BG80Z-../DPE11LA4**	246	26000	-
3	7.8	3650	1.15	186.8	**BG80Z-../DPE11LA4**	246	26000	-
3	7.1	4000	1.05	207.4	**BG80Z-../DPE11LA4**	246	26000	-
3	6.5	4100	1.1	227.2	**BG80G40-../DPE11LA4**	254	26000	-
3	5.8	4600	1.0	252.3	**BG80G40-../DPE11LA4**	254	26000	-
3	5.2	5200	0.88	282.8	**BG80G40-../DPE11LA4**	254	26000	-
3	4.7	5700	0.81	314.0	**BG80G40-../DPE11LA4**	254	26000	-
3	10.5	2700	3.1	139.2	**BG90Z-../DPE11LA4**	348	65000	-
3	9.0	3150	2.7	163.0	**BG90Z-../DPE11LA4**	348	65000	-
3	8.2	3450	2.4	178.5	**BG90Z-../DPE11LA4**	348	65000	-
3	7.0	4050	2.1	208.3	**BG90Z-../DPE11LA4**	348	65000	-
3	6.4	4450	1.9	228.1	**BG90Z-../DPE11LA4**	348	65000	-
3	5.6	4650	2.0	262.5	**BG90G50-../DPE11LA4**	365	65000	-
3	4.9	5500	1.65	298.8	**BG90G50-../DPE11LA4**	365	65000	-
3	4.1	6500	1.4	360.3	**BG90G50-../DPE11LA4**	365	65000	-
3	3.4	8000	1.15	435.8	**BG90G50-../DPE11LA4**	365	65000	-
3	2.9	9300	0.99	504.7	**BG90G50-../DPE11LA4**	365	65000	-
3	2.5	10800	0.85	588.8	**BG90G50-../DPE11LA4**	365	65000	-
3	4.9	5800	3.2	300.4	**BG100Z-../DPE11LA4**	555	90000	-
3	4.3	6600	2.8	343.6	**BG100Z-../DPE11LA4**	555	90000	-
3	3.9	7300	2.5	382.6	**BG100Z-../DPE11LA4**	555	90000	-
3	3.2	8900	2.1	456.7	**BG100Z-../DPE11LA4**	555	90000	-
3	2.9	9800	1.9	508.5	**BG100Z-../DPE11LA4**	555	90000	-
3	2.5	11400	1.6	591.1	**BG100Z-../DPE11LA4**	555	90000	-
3	2.3	12400	1.5	658.1	**BG100Z-../DPE11LA4**	555	90000	-
3	2.0	14300	1.3	759.0	**BG100Z-../DPE11LA4**	555	90000	-
3	1.8	15900	1.15	845.1	**BG100Z-../DPE11LA4**	555	90000	-
3	1.5	17500	1.05	976.1	**BG100G50-../DPE11LA4**	552	90000	-
3	1.4	19000	0.97	1043	**BG100G50-../DPE11LA4**	552	90000	-
3	1.3	20400	0.91	1204	**BG100G50-../DPE11LA4**	552	90000	-

4 kW

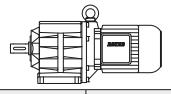

P_N	50 Hz			i	Type	m	F_{RN}	F_{RV}
	n_2	M_2	f_B					
[kW]	[1/min]	[Nm]	[—]	[:1]		[kg]	[N]	[N]
4	550	69	1.85	2.67	**BG30-../DPE11LB4**	58	1450	-
4	430	88	1.6	3.40	**BG30-../DPE11LB4**	58	1580	-
4	345	110	1.55	4.21	**BG30-../DPE11LB4**	58	1630	-
4	270	141	1.4	5.44	**BG30-../DPE11LB4**	58	1670	-
4	215	177	1.3	6.76	**BG30-../DPE11LB4**	58	2550	-
4	194	196	1.2	7.50	**BG30-../DPE11LB4**	58	2750	-
4	184	205	1.05	7.91	**BG30-../DPE11LB4**	58	1760	-
4	169	225	1.1	8.60	**BG30-../DPE11LB4**	58	2800	-
4	152	250	1.0	9.55	**BG30-../DPE11LB4**	58	3000	-
4	137	275	0.97	10.65	**BG30-../DPE11LB4**	58	2950	-
4	123	310	0.88	11.82	**BG30-../DPE11LB4**	58	3200	-
4	106	360	0.82	13.77	**BG30-../DPE11LB4**	58	3150	-
4	590	64	3.2	2.46	**BG40-../DPE11LB4**	77	2150	-
4	455	83	2.7	3.19	**BG40-../DPE11LB4**	77	2350	-
4	370	103	2.4	3.97	**BG40-../DPE11LB4**	77	2400	-
4	295	129	2.1	4.94	**BG40-../DPE11LB4**	77	2450	-

4 kW

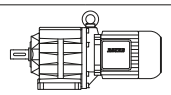

P_N	50 Hz			i	Type	m	F_{RN}	F_{RV}
	n_2	M_2	f_B					
[kW]	[1/min]	[Nm]	[—]	[:1]		[kg]	[N]	[N]
4	235	162	1.8	6.29	**BG40-../DPE11LB4**	77	2600	-
4	230	166	1.9	6.40	**BG40-../DPE11LB4**	77	3750	-
4	205	186	1.75	7.11	**BG40-../DPE11LB4**	77	3950	-
4	191	200	1.5	7.62	**BG40-../DPE11LB4**	77	2650	-
4	175	215	1.6	8.31	**BG40-../DPE11LB4**	77	4100	-
4	162	235	1.25	9.00	**BG40-../DPE11LB4**	77	2650	-
4	158	240	1.5	9.23	**BG40-../DPE11LB4**	77	4350	-
4	141	270	1.4	10.35	**BG40-../DPE11LB4**	77	4350	-
4	127	300	1.3	11.49	**BG40-../DPE11LB4**	77	4600	-
4	113	335	1.25	12.86	**BG40-../DPE11LB4**	77	4500	-
4	102	370	1.15	14.28	**BG40-../DPE11LB4**	77	4900	-
4	89	425	1.0	16.39	**BG40-../DPE11LB4**	77	5300	-
4	80	475	0.89	18.19	**BG40-../DPE11LB4**	77	5600	-
4	74	510	0.83	19.84	**BG40-../DPE11LB4**	77	5800	-
4	300	127	3.1	4.91	**BG50-../DPE11LB4**	86	3500	-
4	240	159	2.8	6.07	**BG50-../DPE11LB4**	86	4700	-
4	220	173	2.6	6.74	**BG50-../DPE11LB4**	86	3750	-
4	167	225	2.3	8.70	**BG50-../DPE11LB4**	86	5300	-
4	151	250	2.1	9.65	**BG50-../DPE11LB4**	86	5600	-
4	121	315	1.85	12.06	**BG50-../DPE11LB4**	86	5700	-
4	109	350	1.7	13.36	**BG50-../DPE11LB4**	86	6100	-
4	88	430	1.45	16.53	**BG50-../DPE11LB4**	86	6500	-
4	80	475	1.35	18.33	**BG50-../DPE11LB4**	86	7200	-
4	67	570	1.1	21.96	**BG50-../DPE11LB4**	86	8000	-
4	60	630	1.0	24.34	**BG50-../DPE11LB4**	86	8700	-
4	49	770	0.82	29.62	**BG50-../DPE11LB4**	86	8000	-
4	120	315	3.1	12.16	**BG60-../DPE11LB4**	119	10800	-
4	108	350	2.9	13.47	**BG60-../DPE11LB4**	119	11200	-
4	87	435	2.5	16.80	**BG60-../DPE11LB4**	119	12000	-
4	78	485	2.4	18.62	**BG60-../DPE11LB4**	119	12400	-
4	65	580	2.1	22.40	**BG60-../DPE11LB4**	119	13300	-
4	59	640	1.9	24.82	**BG60-../DPE11LB4**	119	13800	-
4	49.5	770	1.55	29.31	**BG60-../DPE11LB4**	119	14800	-
4	45	840	1.45	32.48	**BG60-../DPE11LB4**	119	15400	-
4	37.5	1010	1.2	38.85	**BG60-../DPE11LB4**	119	16000	-
4	34	1120	1.05	43.05	**BG60-../DPE11LB4**	119	16000	-
4	29	1310	0.92	50.31	**BG60-../DPE11LB4**	119	16000	-
4	26.5	1440	0.83	55.76	**BG60-../DPE11LB4**	119	16000	-
4	54	700	3.3	27.21	**BG70-../DPE11LB4**	149	16400	-
4	49	770	3.0	29.69	**BG70-../DPE11LB4**	149	16900	-
4	41.5	920	2.5	35.24	**BG70-../DPE11LB4**	149	18300	-
4	37	1030	2.2	39.22	**BG70-../DPE11LB4**	149	19100	-
4	31.5	1210	1.9	46.54	**BG70-../DPE11LB4**	149	20000	-
4	29	1310	1.75	50.40	**BG70-../DPE11LB4**	149	20000	-
4	24.5	1550	1.5	59.82	**BG70-../DPE11LB4**	149	20000	-
4	22.5	1690	1.35	64.85	**BG70Z-../DPE11LB4**	176	20000	-
4	20	1910	1.2	73.82	**BG70Z-../DPE11LB4**	176	20000	-
4	17	2200	1.05	87.61	**BG70Z-../DPE11LB4**	176	20000	-
4	15.5	2450	0.94	95.74	**BG70Z-../DPE11LB4**	176	20000	-
4	30	1270	3.3	48.80	**BG80-../DPE11LB4**	204	23800	-
4	25.5	1490	2.8	57.24	**BG80-../DPE11LB4**	204	25400	-
4	23	1660	2.5	63.56	**BG80-../DPE11LB4**	204	26000	-
4	22	1730	2.4	66.40	**BG80Z-../DPE11LB4**	246	26000	-
4	20	1910	2.2	73.73	**BG80Z-../DPE11LB4**	246	26000	-
4	17.5	2150	1.95	84.55	**BG80Z-../DPE11LB4**	246	26000	-
4	15.5	2450	1.7	93.89	**BG80Z-../DPE11LB4**	246	26000	-
4	13	2900	1.45	112.4	**BG80Z-../DPE11LB4**	246	26000	-
4	12	3150	1.35	124.8	**BG80Z-../DPE11LB4**	246	26000	-
4	10	3800	1.1	145.4	**BG80Z-../DPE11LB4**	246	26000	-
4	9.0	4200	1.0	161.5	**BG80Z-../DPE11LB4**	246	26000	-
4	7.8	4850	0.87	186.8	**BG80Z-../DPE11LB4**	246	26000	-
4	6.4	5600	0.82	227.2	**BG80G40-../DPE11LB4**	254	26000	-
4	14	2700	3.1	105.7	**BG90Z-../DPE11LB4**	348	65000	-
4	11.5	3300	2.5	127.1	**BG90Z-../DPE11LB4**	348	65000	-
4	10.5	3600	2.3	139.2	**BG90Z-../DPE11LB4**	348	65000	-

4 kW

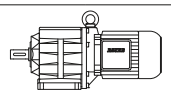

P_N	50 Hz			i	Type	m	F_{RN}	F_{RV}
	n_2	M_2	f_B					
[kW]	[1/min]	[Nm]	[—]	[:1]		[kg]	[N]	[N]
4	8.9	4250	2.0	163.0	**BG90Z-../DPE11LB4**	348	65000	-
4	8.2	4650	1.8	178.5	**BG90Z-../DPE11LB4**	348	65000	-
4	7.0	5400	1.55	208.3	**BG90Z-../DPE11LB4**	348	65000	-
4	6.4	5900	1.4	228.1	**BG90Z-../DPE11LB4**	348	65000	-
4	5.6	6300	1.45	262.5	**BG90G50-../DPE11LB4**	365	65000	-
4	4.9	7500	1.25	298.8	**BG90G50-../DPE11LB4**	365	65000	-
4	4.1	8800	1.05	360.3	**BG90G50-../DPE11LB4**	365	65000	-
4	3.4	10800	0.85	435.8	**BG90G50-../DPE11LB4**	365	65000	-
4	7.3	5200	3.2	198.8	**BG100-../DPE11LB4**	465	90000	-
4	6.3	6000	2.8	232.6	**BG100-../DPE11LB4**	465	90000	-
4	5.6	6800	2.5	259.0	**BG100-../DPE11LB4**	465	90000	-
4	5.4	7000	2.6	269.8	**BG100Z-../DPE11LB4**	555	90000	-
4	4.9	7700	2.4	300.4	**BG100Z-../DPE11LB4**	555	90000	-
4	4.3	8800	2.1	343.6	**BG100Z-../DPE11LB4**	555	90000	-
4	3.8	10000	1.85	382.6	**BG100Z-../DPE11LB4**	555	90000	-
4	3.2	11900	1.55	456.7	**BG100Z-../DPE11LB4**	555	90000	-
4	2.9	13100	1.4	508.5	**BG100Z-../DPE11LB4**	555	90000	-
4	2.5	15200	1.2	591.1	**BG100Z-../DPE11LB4**	555	90000	-
4	2.3	16600	1.1	658.1	**BG100Z-../DPE11LB4**	555	90000	-
4	2.0	19100	0.97	759.0	**BG100Z-../DPE11LB4**	555	90000	-
4	1.8	21200	0.87	845.1	**BG100Z-../DPE11LB4**	555	90000	-

5.5 kW

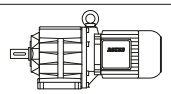

P_N	50 Hz			i	Type	m	F_{RN}	F_{RV}
	n_2	M_2	f_B					
[kW]	[1/min]	[Nm]	[—]	[:1]		[kg]	[N]	[N]
5.5	550	95	1.35	2.67	**BG30-../DPE11LB4C**	62	1450	-
5.5	435	120	1.15	3.40	**BG30-../DPE11LB4C**	62	1580	-
5.5	350	150	1.15	4.21	**BG30-../DPE11LB4C**	62	1630	-
5.5	270	194	1.05	5.44	**BG30-../DPE11LB4C**	62	1670	-
5.5	220	235	0.96	6.76	**BG30-../DPE11LB4C**	62	2550	-
5.5	196	265	0.87	7.50	**BG30-../DPE11LB4C**	62	2750	-
5.5	171	305	0.81	8.60	**BG30-../DPE11LB4C**	62	2800	-
5.5	600	87	2.3	2.46	**BG40-../DPE11LB4C**	81	2150	-
5.5	460	114	1.95	3.19	**BG40-../DPE11LB4C**	81	2350	-
5.5	370	141	1.75	3.97	**BG40-../DPE11LB4C**	81	2400	-
5.5	300	175	1.55	4.94	**BG40-../DPE11LB4C**	81	2450	-
5.5	235	220	1.35	6.29	**BG40-../DPE11LB4C**	81	2600	-
5.5	230	225	1.4	6.40	**BG40-../DPE11LB4C**	81	3750	-
5.5	210	250	1.3	7.11	**BG40-../DPE11LB4C**	81	3950	-
5.5	193	270	1.1	7.62	**BG40-../DPE11LB4C**	81	2650	-
5.5	177	295	1.15	8.31	**BG40-../DPE11LB4C**	81	4100	-
5.5	163	320	0.92	9.00	**BG40-../DPE11LB4C**	81	2650	-
5.5	159	330	1.1	9.23	**BG40-../DPE11LB4C**	81	4350	-
5.5	142	365	1.05	10.35	**BG40-../DPE11LB4C**	81	4350	-
5.5	128	410	0.95	11.49	**BG40-../DPE11LB4C**	81	4600	-
5.5	114	460	0.89	12.86	**BG40-../DPE11LB4C**	81	4500	-
5.5	103	500	0.84	14.28	**BG40-../DPE11LB4C**	81	4900	-
5.5	415	126	2.8	3.55	**BG50-../DPE11LB4C**	90	3300	-
5.5	300	175	2.3	4.91	**BG50-../DPE11LB4C**	90	3500	-
5.5	245	210	2.1	6.07	**BG50-../DPE11LB4C**	90	4700	-
5.5	220	235	1.9	6.74	**BG50-../DPE11LB4C**	90	3750	-
5.5	169	310	1.65	8.70	**BG50-../DPE11LB4C**	90	5300	-
5.5	152	345	1.5	9.65	**BG50-../DPE11LB4C**	90	5600	-
5.5	122	430	1.35	12.06	**BG50-../DPE11LB4C**	90	5700	-
5.5	110	475	1.25	13.36	**BG50-../DPE11LB4C**	90	6100	-
5.5	89	590	1.05	16.53	**BG50-../DPE11LB4C**	90	6500	-
5.5	80	650	0.97	18.33	**BG50-../DPE11LB4C**	90	7200	-
5.5	67	780	0.81	21.96	**BG50-../DPE11LB4C**	90	8000	-
5.5	215	240	3.3	6.88	**BG60-../DPE11LB4C**	123	8600	-
5.5	161	325	2.7	9.13	**BG60-../DPE11LB4C**	123	9800	-
5.5	145	360	2.5	10.12	**BG60-../DPE11LB4C**	123	10200	-

5.5 kW

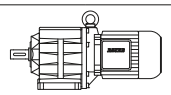

P_N	50 Hz			i	Type	m	F_{RN}	F_{RV}
	n_2	M_2	f_B					
[kW]	[1/min]	[Nm]	[—]	[:1]		[kg]	[N]	[N]
5.5	121	430	2.3	12.16	**BG60-../DPE11LB4C**	123	10800	-
5.5	109	480	2.1	13.47	**BG60-../DPE11LB4C**	123	11200	-
5.5	88	590	1.9	16.80	**BG60-../DPE11LB4C**	123	12000	-
5.5	79	660	1.75	18.62	**BG60-../DPE11LB4C**	123	12400	-
5.5	66	790	1.5	22.40	**BG60-../DPE11LB4C**	123	13300	-
5.5	60	870	1.4	24.82	**BG60-../DPE11LB4C**	123	13800	-
5.5	50	1050	1.15	29.31	**BG60-../DPE11LB4C**	123	14800	-
5.5	45.5	1150	1.05	32.48	**BG60-../DPE11LB4C**	123	15400	-
5.5	38	1380	0.87	38.85	**BG60-../DPE11LB4C**	123	16000	-
5.5	70	750	3.1	20.98	**BG70-../DPE11LB4C**	153	14600	-
5.5	64	820	2.8	22.92	**BG70-../DPE11LB4C**	153	15100	-
5.5	54	970	2.4	27.21	**BG70-../DPE11LB4C**	153	16400	-
5.5	49.5	1060	2.2	29.69	**BG70-../DPE11LB4C**	153	16900	-
5.5	42	1250	1.85	35.24	**BG70-../DPE11LB4C**	153	18300	-
5.5	37.5	1400	1.65	39.22	**BG70-../DPE11LB4C**	153	19100	-
5.5	31.5	1660	1.4	46.54	**BG70-../DPE11LB4C**	153	20000	-
5.5	29.5	1780	1.3	50.40	**BG70-../DPE11LB4C**	153	20000	-
5.5	24.5	2100	1.1	59.82	**BG70-../DPE11LB4C**	153	20000	-
5.5	23	2250	1.0	64.85	**BG70Z-../DPE11LB4C**	180	20000	-
5.5	20	2600	0.88	73.82	**BG70Z-../DPE11LB4C**	180	20000	-
5.5	39	1340	3.1	38.00	**BG80-../DPE11LB4C**	208	21300	-
5.5	33.5	1560	2.7	43.94	**BG80-../DPE11LB4C**	208	22600	-
5.5	30.5	1720	2.4	48.80	**BG80-../DPE11LB4C**	208	23800	-
5.5	26	2000	2.1	57.24	**BG80-../DPE11LB4C**	208	25400	-
5.5	23.5	2200	1.9	63.56	**BG80-../DPE11LB4C**	208	26000	-
5.5	22.5	2300	1.85	66.40	**BG80Z-../DPE11LB4C**	250	26000	-
5.5	20	2600	1.6	73.73	**BG80Z-../DPE11LB4C**	250	26000	-
5.5	17.5	3000	1.4	84.55	**BG80Z-../DPE11LB4C**	250	26000	-
5.5	16	3250	1.3	93.89	**BG80Z-../DPE11LB4C**	250	26000	-
5.5	13.5	3850	1.1	112.4	**BG80Z-../DPE11LB4C**	250	26000	-
5.5	12	4350	0.97	124.8	**BG80Z-../DPE11LB4C**	250	26000	-
5.5	10.5	5000	0.84	145.4	**BG80Z-../DPE11LB4C**	250	26000	-
5.5	19.5	2650	3.2	76.61	**BG90Z-../DPE11LB4C**	352	65000	-
5.5	17.5	3000	2.8	83.91	**BG90Z-../DPE11LB4C**	352	65000	-
5.5	15.5	3350	2.5	96.53	**BG90Z-../DPE11LB4C**	352	65000	-
5.5	14	3750	2.2	105.7	**BG90Z-../DPE11LB4C**	352	65000	-
5.5	12	4350	1.95	127.1	**BG90Z-../DPE11LB4C**	352	65000	-
5.5	11	4750	1.75	139.2	**BG90Z-../DPE11LB4C**	352	65000	-
5.5	9.0	5800	1.45	163.0	**BG90Z-../DPE11LB4C**	352	65000	-
5.5	8.3	6300	1.35	178.5	**BG90Z-../DPE11LB4C**	352	65000	-
5.5	7.1	7300	1.15	208.3	**BG90Z-../DPE11LB4C**	352	65000	-
5.5	6.5	8000	1.05	228.1	**BG90Z-../DPE11LB4C**	352	65000	-
5.5	5.6	8900	1.05	262.5	**BG90G50-../DPE11LB4C**	369	65000	-
5.5	5.0	10200	0.9	298.8	**BG90G50-../DPE11LB4C**	369	65000	-
5.5	9.5	5500	3.1	154.8	**BG100-../DPE11LB4C**	469	90000	-
5.5	8.3	6300	2.7	178.6	**BG100-../DPE11LB4C**	469	90000	-
5.5	7.4	7000	2.4	198.8	**BG100-../DPE11LB4C**	469	90000	-
5.5	6.3	8300	2.0	232.6	**BG100-../DPE11LB4C**	469	90000	-
5.5	5.7	9200	1.85	259.0	**BG100-../DPE11LB4C**	469	90000	-
5.5	5.5	9500	1.95	269.8	**BG100Z-../DPE11LB4C**	559	90000	-
5.5	4.9	10700	1.75	300.4	**BG100Z-../DPE11LB4C**	559	90000	-
5.5	4.3	12200	1.5	343.6	**BG100Z-../DPE11LB4C**	559	90000	-
5.5	3.9	13400	1.4	382.6	**BG100Z-../DPE11LB4C**	559	90000	-
5.5	3.3	15900	1.15	456.7	**BG100Z-../DPE11LB4C**	559	90000	-
5.5	2.9	18100	1.0	508.5	**BG100Z-../DPE11LB4C**	559	90000	-
5.5	2.5	21000	0.88	591.1	**BG100Z-../DPE11LB4C**	559	90000	-
5.5	2.3	22800	0.81	658.1	**BG100Z-../DPE11LB4C**	559	90000	-

7.5 kW

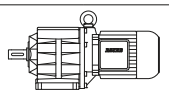

P_N	50 Hz			i	Type	m	F_{RN}	F_{RV}
	n_2	M_2	f_B					
[kW]	[1/min]	[Nm]	[—]	[:1]		[kg]	[N]	[N]
7.5	600	119	2.6	2.47	**BG50-../DPE13XA4**	102	2900	-
7.5	415	172	2.0	3.55	**BG50-../DPE13XA4**	102	3300	-
7.5	300	235	1.7	4.91	**BG50-../DPE13XA4**	102	3500	-
7.5	245	290	1.55	6.07	**BG50-../DPE13XA4**	102	4700	-
7.5	220	325	1.4	6.74	**BG50-../DPE13XA4**	102	3750	-
7.5	168	425	1.2	8.70	**BG50-../DPE13XA4**	102	5300	-
7.5	152	470	1.1	9.65	**BG50-../DPE13XA4**	102	5600	-
7.5	122	580	0.99	12.06	**BG50-../DPE13XA4**	102	5700	-
7.5	110	650	0.91	13.36	**BG50-../DPE13XA4**	102	6100	-
7.5	295	240	2.9	4.98	**BG60-../DPE13XA4**	136	7800	-
7.5	240	295	2.6	6.16	**BG60-../DPE13XA4**	136	8500	-
7.5	215	330	2.4	6.88	**BG60-../DPE13XA4**	136	8600	-
7.5	160	445	2.0	9.13	**BG60-../DPE13XA4**	136	9800	-
7.5	145	490	1.85	10.12	**BG60-../DPE13XA4**	136	10200	-
7.5	121	590	1.7	12.16	**BG60-../DPE13XA4**	136	10800	-
7.5	109	650	1.55	13.47	**BG60-../DPE13XA4**	136	11200	-
7.5	87	820	1.35	16.80	**BG60-../DPE13XA4**	136	12000	-
7.5	79	900	1.25	18.62	**BG60-../DPE13XA4**	136	12400	-
7.5	66	1080	1.1	22.40	**BG60-../DPE13XA4**	136	13300	-
7.5	59	1210	0.99	24.82	**BG60-../DPE13XA4**	136	13800	-
7.5	50	1430	0.84	29.31	**BG60-../DPE13XA4**	136	14800	-
7.5	95	750	3.1	15.53	**BG70-../DPE13XA4**	166	12700	-
7.5	83	860	2.7	17.68	**BG70-../DPE13XA4**	166	13400	-
7.5	70	1020	2.3	20.98	**BG70-../DPE13XA4**	166	14600	-
7.5	64	1110	2.1	22.92	**BG70-../DPE13XA4**	166	15100	-
7.5	54	1320	1.75	27.21	**BG70-../DPE13XA4**	166	16400	-
7.5	49.5	1440	1.6	29.69	**BG70-../DPE13XA4**	166	16900	-
7.5	41.5	1720	1.35	35.24	**BG70-../DPE13XA4**	166	18300	-
7.5	37.5	1910	1.2	39.22	**BG70-../DPE13XA4**	166	19100	-
7.5	31.5	2250	1.0	46.54	**BG70-../DPE13XA4**	166	20000	-
7.5	29	2450	0.94	50.40	**BG70-../DPE13XA4**	166	20000	-
7.5	56	1270	3.3	26.44	**BG80-../DPE13XA4**	220	17900	-
7.5	50	1430	2.9	29.36	**BG80-../DPE13XA4**	220	18900	-
7.5	43	1660	2.5	34.22	**BG80-../DPE13XA4**	220	20200	-
7.5	38.5	1860	2.3	38.00	**BG80-../DPE13XA4**	220	21300	-
7.5	33.5	2100	2.0	43.94	**BG80-../DPE13XA4**	220	22600	-
7.5	30	2350	1.8	48.80	**BG80-../DPE13XA4**	220	23800	-
7.5	26	2750	1.55	57.24	**BG80-../DPE13XA4**	220	25400	-
7.5	23	3100	1.35	63.56	**BG80-../DPE13XA4**	220	26000	-
7.5	22	3250	1.3	66.40	**BG80Z-../DPE13XA4**	263	26000	-
7.5	20	3550	1.2	73.73	**BG80Z-../DPE13XA4**	263	26000	-
7.5	17.5	4050	1.05	84.55	**BG80Z-../DPE13XA4**	263	26000	-
7.5	16	4450	0.94	93.89	**BG80Z-../DPE13XA4**	263	26000	-
7.5	27.5	2600	3.2	53.46	**BG90-../DPE13XA4**	309	65000	-
7.5	26	2750	2.5	57.04	**BG90Z-../DPE13XA4**	365	65000	-
7.5	23.5	3000	2.5	62.47	**BG90Z-../DPE13XA4**	365	65000	-
7.5	19.5	3650	2.3	76.61	**BG90Z-../DPE13XA4**	365	65000	-
7.5	17.5	4050	2.1	83.91	**BG90Z-../DPE13XA4**	365	65000	-
7.5	15.5	4600	1.85	96.53	**BG90Z-../DPE13XA4**	365	65000	-
7.5	14	5100	1.65	105.7	**BG90Z-../DPE13XA4**	365	65000	-
7.5	11.5	6200	1.35	127.1	**BG90Z-../DPE13XA4**	365	65000	-
7.5	10.5	6800	1.25	139.2	**BG90Z-../DPE13XA4**	365	65000	-
7.5	9.0	7900	1.05	163.0	**BG90Z-../DPE13XA4**	365	65000	-
7.5	8.2	8700	0.97	178.5	**BG90Z-../DPE13XA4**	365	65000	-
7.5	7.1	10000	0.84	208.3	**BG90Z-../DPE13XA4**	365	65000	-
7.5	6.7	10300	0.89	219.9	**BG90G50-../DPE13XA4**	381	65000	-
7.5	14	5100	3.3	107.5	**BG100-../DPE13XA4**	481	90000	-
7.5	12.5	5700	2.9	119.7	**BG100-../DPE13XA4**	481	90000	-
7.5	10.5	6800	2.5	139.1	**BG100-../DPE13XA4**	481	90000	-
7.5	9.5	7500	2.2	154.8	**BG100-../DPE13XA4**	481	90000	-
7.5	8.2	8700	1.95	178.6	**BG100-../DPE13XA4**	481	90000	-
7.5	7.4	9600	1.75	198.8	**BG100-../DPE13XA4**	481	90000	-
7.5	6.3	11300	1.5	232.6	**BG100-../DPE13XA4**	481	90000	-
7.5	5.7	12500	1.35	259.0	**BG100-../DPE13XA4**	481	90000	-
7.5	5.5	13000	1.4	269.8	**BG100Z-../DPE13XA4**	572	90000	-

7.5 kW

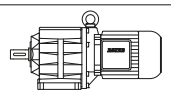

P_N	50 Hz			i	Type	m	F_{RN}	F_{RV}
	n_2	M_2	f_B					
[kW]	[1/min]	[Nm]	[—]	[:1]		[kg]	[N]	[N]
7.5	4.9	14600	1.25	300.4	**BG100Z-../DPE13XA4**	572	90000	-
7.5	4.3	16600	1.1	343.6	**BG100Z-../DPE13XA4**	572	90000	-
7.5	3.9	18300	1.0	382.6	**BG100Z-../DPE13XA4**	572	90000	-
7.5	3.2	22300	0.83	456.7	**BG100Z-../DPE13XA4**	572	90000	-

9.5 kW

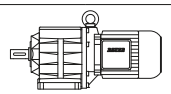

P_N	50 Hz			i	Type	m	F_{RN}	F_{RV}
	n_2	M_2	f_B					
[kW]	[1/min]	[Nm]	[—]	[:1]		[kg]	[N]	[N]
9.5	600	151	2.0	2.47	**BG50-../DPE16LB4**	138	2900	-
9.5	420	215	1.6	3.55	**BG50-../DPE16LB4**	138	3300	-
9.5	305	295	1.35	4.91	**BG50-../DPE16LB4**	138	3500	-
9.5	245	370	1.2	6.07	**BG50-../DPE16LB4**	138	4700	-
9.5	220	410	1.1	6.74	**BG50-../DPE16LB4**	138	3750	-
9.5	170	530	0.96	8.70	**BG50-../DPE16LB4**	138	5300	-
9.5	153	590	0.89	9.65	**BG50-../DPE16LB4**	138	5600	-
9.5	395	225	2.7	3.74	**BG60-../DPE16LB4**	172	7100	-
9.5	300	300	2.3	4.98	**BG60-../DPE16LB4**	172	7800	-
9.5	240	375	2.1	6.16	**BG60-../DPE16LB4**	172	8500	-
9.5	220	410	1.95	6.82	**BG60-../DPE16LB4**	172	8900	-
9.5	215	420	1.85	6.88	**BG60-../DPE16LB4**	172	8600	-
9.5	162	560	1.6	9.13	**BG60-../DPE16LB4**	172	9800	-
9.5	146	620	1.45	10.12	**BG60-../DPE16LB4**	172	10200	-
9.5	122	740	1.35	12.16	**BG60-../DPE16LB4**	172	10800	-
9.5	110	820	1.25	13.47	**BG60-../DPE16LB4**	172	11200	-
9.5	88	1030	1.1	16.80	**BG60-../DPE16LB4**	172	12000	-
9.5	80	1130	1.0	18.62	**BG60-../DPE16LB4**	172	12400	-
9.5	66	1370	0.88	22.40	**BG60-../DPE16LB4**	172	13300	-
9.5	124	730	3.2	11.97	**BG70-../DPE16LB4**	206	11200	-
9.5	113	800	2.9	13.08	**BG70-../DPE16LB4**	206	11600	-
9.5	95	950	2.4	15.53	**BG70-../DPE16LB4**	206	12700	-
9.5	84	1080	2.1	17.68	**BG70-../DPE16LB4**	206	13400	-
9.5	71	1270	1.8	20.98	**BG70-../DPE16LB4**	206	14600	-
9.5	65	1390	1.65	22.92	**BG70-../DPE16LB4**	206	15100	-
9.5	55	1640	1.4	27.21	**BG70-../DPE16LB4**	206	16400	-
9.5	50	1810	1.25	29.69	**BG70-../DPE16LB4**	206	16900	-
9.5	42	2150	1.05	35.24	**BG70-../DPE16LB4**	206	18300	-
9.5	38	2350	0.98	39.22	**BG70-../DPE16LB4**	206	19100	-
9.5	32	2800	0.82	46.54	**BG70-../DPE16LB4**	206	20000	-
9.5	67	1350	3.1	22.09	**BG80-../DPE16LB4**	256	16500	-
9.5	56	1620	2.6	26.44	**BG80-../DPE16LB4**	256	17900	-
9.5	51	1770	2.4	29.36	**BG80-../DPE16LB4**	256	18900	-
9.5	43.5	2050	2.0	34.22	**BG80-../DPE16LB4**	256	20200	-
9.5	39	2300	1.85	38.00	**BG80-../DPE16LB4**	256	21300	-
9.5	34	2650	1.6	43.94	**BG80-../DPE16LB4**	256	22600	-
9.5	30.5	2950	1.4	48.80	**BG80-../DPE16LB4**	256	23800	-
9.5	26	3450	1.2	57.24	**BG80-../DPE16LB4**	256	25400	-
9.5	23.5	3850	1.1	63.56	**BG80-../DPE16LB4**	256	26000	-
9.5	22.5	4000	1.05	66.40	**BG80Z-../DPE16LB4**	299	26000	-
9.5	20.5	4400	0.95	73.73	**BG80Z-../DPE16LB4**	299	26000	-
9.5	17.5	5100	0.82	84.55	**BG80Z-../DPE16LB4**	299	26000	-
9.5	35.5	2550	3.3	41.85	**BG90-../DPE16LB4**	346	65000	-
9.5	30.5	2950	2.8	48.82	**BG90-../DPE16LB4**	346	65000	-
9.5	28	3200	2.6	53.46	**BG90-../DPE16LB4**	346	65000	-
9.5	26	3450	1.95	57.04	**BG90Z-../DPE16LB4**	405	65000	-
9.5	24	3750	2.0	62.47	**BG90Z-../DPE16LB4**	405	65000	-
9.5	19.5	4650	1.8	76.61	**BG90Z-../DPE16LB4**	405	65000	-
9.5	18	5000	1.7	83.91	**BG90Z-../DPE16LB4**	405	65000	-
9.5	15.5	5800	1.45	96.53	**BG90Z-../DPE16LB4**	405	65000	-
9.5	14	6400	1.3	105.7	**BG90Z-../DPE16LB4**	405	65000	-
9.5	12	7500	1.1	127.1	**BG90Z-../DPE16LB4**	405	65000	-
9.5	11	8200	1.0	139.2	**BG90Z-../DPE16LB4**	405	65000	-

9.5 kW

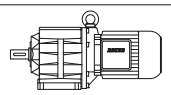

P_N	50 Hz			i	Type	m	F_{RN}	F_{RV}
	n_2	M_2	f_B					
[kW]	[1/min]	[Nm]	[—]	[:1]		[kg]	[N]	[N]
9.5	9.1	9900	0.85	163.0	**BG90Z-../DPE16LB4**	405	65000	-
9.5	16.5	5400	3.1	90.02	**BG100-../DPE16LB4**	516	90000	-
9.5	14	6400	2.6	107.5	**BG100-../DPE16LB4**	516	90000	-
9.5	12.5	7200	2.3	119.7	**BG100-../DPE16LB4**	516	90000	-
9.5	11	8200	2.0	139.1	**BG100-../DPE16LB4**	516	90000	-
9.5	9.6	9400	1.8	154.8	**BG100-../DPE16LB4**	516	90000	-
9.5	8.3	10900	1.55	178.6	**BG100-../DPE16LB4**	516	90000	-
9.5	7.5	12000	1.4	198.8	**BG100-../DPE16LB4**	516	90000	-
9.5	6.4	14100	1.2	232.6	**BG100-../DPE16LB4**	516	90000	-
9.5	5.7	15900	1.05	259.0	**BG100-../DPE16LB4**	516	90000	-
9.5	5.5	16400	1.15	269.8	**BG100Z-../DPE16LB4**	608	90000	-
9.5	5.0	18100	1.0	300.4	**BG100Z-../DPE16LB4**	608	90000	-
9.5	4.3	21000	0.88	343.6	**BG100Z-../DPE16LB4**	608	90000	-
9.5	3.9	23200	0.8	382.6	**BG100Z-../DPE16LB4**	608	90000	-

11 kW

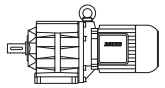

P_N	50 Hz			i	Type	m	F_{RN}	F_{RV}
	n_2	M_2	f_B					
[kW]	[1/min]	[Nm]	[—]	[:1]		[kg]	[N]	[N]
11	600	175	1.75	2.47	**BG50-../DPE16LB4**	138	2900	-
11	420	250	1.4	3.55	**BG50-../DPE16LB4**	138	3300	-
11	305	340	1.15	4.91	**BG50-../DPE16LB4**	138	3500	-
11	245	425	1.05	6.07	**BG50-../DPE16LB4**	138	4700	-
11	220	475	0.95	6.74	**BG50-../DPE16LB4**	138	3750	-
11	170	610	0.83	8.70	**BG50-../DPE16LB4**	138	5300	-
11	590	178	3.0	2.52	**BG60-../DPE16LB4**	172	6200	-
11	395	265	2.3	3.74	**BG60-../DPE16LB4**	172	7100	-
11	300	350	1.95	4.98	**BG60-../DPE16LB4**	172	7800	-
11	240	435	1.75	6.16	**BG60-../DPE16LB4**	172	8500	-
11	220	475	1.7	6.82	**BG60-../DPE16LB4**	172	8900	-
11	215	485	1.6	6.88	**BG60-../DPE16LB4**	172	8600	-
11	162	640	1.4	9.13	**BG60-../DPE16LB4**	172	9800	-
11	146	710	1.3	10.12	**BG60-../DPE16LB4**	172	10200	-
11	122	860	1.15	12.16	**BG60-../DPE16LB4**	172	10800	-
11	110	950	1.05	13.47	**BG60-../DPE16LB4**	172	11200	-
11	88	1190	0.93	16.80	**BG60-../DPE16LB4**	172	12000	-
11	80	1310	0.87	18.62	**BG60-../DPE16LB4**	172	12400	-
11	147	710	3.2	10.09	**BG70-../DPE16LB4**	206	10200	-
11	124	840	2.7	11.97	**BG70-../DPE16LB4**	206	11200	-
11	113	920	2.5	13.08	**BG70-../DPE16LB4**	206	11600	-
11	95	1100	2.1	15.53	**BG70-../DPE16LB4**	206	12700	-
11	84	1250	1.85	17.68	**BG70-../DPE16LB4**	206	13400	-
11	71	1470	1.55	20.98	**BG70-../DPE16LB4**	206	14600	-
11	65	1610	1.45	22.92	**BG70-../DPE16LB4**	206	15100	-
11	55	1910	1.2	27.21	**BG70-../DPE16LB4**	206	16400	-
11	50	2100	1.1	29.69	**BG70-../DPE16LB4**	206	16900	-
11	42	2500	0.92	35.24	**BG70-../DPE16LB4**	206	18300	-
11	38	2750	0.84	39.22	**BG70-../DPE16LB4**	206	19100	-
11	75	1400	3.0	19.89	**BG80-../DPE16LB4**	256	15500	-
11	67	1560	2.7	22.09	**BG80-../DPE16LB4**	256	16500	-
11	56	1870	2.2	26.44	**BG80-../DPE16LB4**	256	17900	-
11	51	2050	2.0	29.36	**BG80-../DPE16LB4**	256	18900	-
11	43.5	2400	1.75	34.22	**BG80-../DPE16LB4**	256	20200	-
11	39	2650	1.6	38.00	**BG80-../DPE16LB4**	256	21300	-
11	34	3050	1.4	43.94	**BG80-../DPE16LB4**	256	22600	-
11	30.5	3400	1.25	48.80	**BG80-../DPE16LB4**	256	23800	-
11	26	4000	1.05	57.24	**BG80-../DPE16LB4**	256	25400	-
11	23.5	4450	0.94	63.56	**BG80-../DPE16LB4**	256	26000	-
11	22.5	4650	0.9	66.40	**BG80Z-../DPE16LB4**	299	26000	-
11	20.5	5100	0.82	73.73	**BG80Z-../DPE16LB4**	299	26000	-
11	39	2650	3.2	38.21	**BG90-../DPE16LB4**	346	65000	-

11 kW

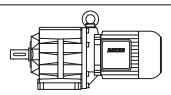

P_N	50 Hz			i	Type	m	F_{RN}	F_{RV}
	n_2	M_2	f_B					
[kW]	[1/min]	[Nm]	[—]	[:1]		[kg]	[N]	[N]
11	35.5	2950	2.8	41.85	**BG90-../DPE16LB4**	346	65000	-
11	30.5	3400	2.5	48.82	**BG90-../DPE16LB4**	346	65000	-
11	28	3750	2.2	53.46	**BG90-../DPE16LB4**	346	65000	-
11	26	4000	1.7	57.04	**BG90Z-../DPE16LB4**	405	65000	-
11	24	4350	1.7	62.47	**BG90Z-../DPE16LB4**	405	65000	-
11	19.5	5300	1.6	76.61	**BG90Z-../DPE16LB4**	405	65000	-
11	18	5800	1.45	83.91	**BG90Z-../DPE16LB4**	405	65000	-
11	15.5	6700	1.25	96.53	**BG90Z-../DPE16LB4**	405	65000	-
11	14	7500	1.1	105.7	**BG90Z-../DPE16LB4**	405	65000	-
11	12	8700	0.97	127.1	**BG90Z-../DPE16LB4**	405	65000	-
11	11	9500	0.88	139.2	**BG90Z-../DPE16LB4**	405	65000	-
11	21	5000	3.2	70.69	**BG100-../DPE16LB4**	516	90000	-
11	18.5	5600	3.0	80.85	**BG100-../DPE16LB4**	516	90000	-
11	16.5	6300	2.7	90.02	**BG100-../DPE16LB4**	516	90000	-
11	14	7500	2.2	107.5	**BG100-../DPE16LB4**	516	90000	-
11	12.5	8400	2.0	119.7	**BG100-../DPE16LB4**	516	90000	-
11	11	9500	1.75	139.1	**BG100-../DPE16LB4**	516	90000	-
11	9.6	10900	1.55	154.8	**BG100-../DPE16LB4**	516	90000	-
11	8.3	12600	1.35	178.6	**BG100-../DPE16LB4**	516	90000	-
11	7.5	14000	1.2	198.8	**BG100-../DPE16LB4**	516	90000	-
11	6.4	16400	1.0	232.6	**BG100-../DPE16LB4**	516	90000	-
11	5.7	18400	0.91	259.0	**BG100-../DPE16LB4**	516	90000	-
11	5.5	19100	0.97	269.8	**BG100Z-../DPE16LB4**	608	90000	-
11	5.0	21000	0.88	300.4	**BG100Z-../DPE16LB4**	608	90000	-

15 kW

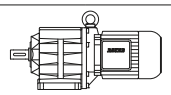

P_N	50 Hz			i	Type	m	F_{RN}	F_{RV}
	n_2	M_2	f_B					
[kW]	[1/min]	[Nm]	[—]	[:1]		[kg]	[N]	[N]
15	600	235	1.3	2.47	**BG50-../DPE16XB4**	148	2900	-
15	420	340	1.0	3.55	**BG50-../DPE16XB4**	148	3300	-
15	305	465	0.86	4.91	**BG50-../DPE16XB4**	148	3500	-
15	590	240	2.2	2.52	**BG60-../DPE16XB4**	182	6200	-
15	395	360	1.7	3.74	**BG60-../DPE16XB4**	182	7100	-
15	300	475	1.45	4.98	**BG60-../DPE16XB4**	182	7800	-
15	240	590	1.3	6.16	**BG60-../DPE16XB4**	182	8500	-
15	220	650	1.25	6.82	**BG60-../DPE16XB4**	182	8900	-
15	215	660	1.2	6.88	**BG60-../DPE16XB4**	182	8600	-
15	162	880	1.0	9.13	**BG60-../DPE16XB4**	182	9800	-
15	146	980	0.93	10.12	**BG60-../DPE16XB4**	182	10200	-
15	122	1170	0.85	12.16	**BG60-../DPE16XB4**	182	10800	-
15	210	680	3.2	7.14	**BG70-../DPE16XB4**	216	8800	-
15	174	820	2.8	8.48	**BG70-../DPE16XB4**	216	9500	-
15	147	970	2.4	10.09	**BG70-../DPE16XB4**	216	10200	-
15	124	1150	2.0	11.97	**BG70-../DPE16XB4**	216	11200	-
15	113	1260	1.85	13.08	**BG70-../DPE16XB4**	216	11600	-
15	95	1500	1.55	15.53	**BG70-../DPE16XB4**	216	12700	-
15	84	1700	1.35	17.68	**BG70-../DPE16XB4**	216	13400	-
15	71	2000	1.15	20.98	**BG70-../DPE16XB4**	216	14600	-
15	65	2200	1.05	22.92	**BG70-../DPE16XB4**	216	15100	-
15	55	2600	0.88	27.21	**BG70-../DPE16XB4**	216	16400	-
15	50	2850	0.81	29.69	**BG70-../DPE16XB4**	216	16900	-
15	95	1500	2.8	15.62	**BG80-../DPE16XB4**	266	13700	-
15	86	1660	2.5	17.35	**BG80-../DPE16XB4**	266	14600	-
15	75	1910	2.2	19.89	**BG80-../DPE16XB4**	266	15500	-
15	67	2100	2.0	22.09	**BG80-../DPE16XB4**	266	16500	-
15	56	2550	1.65	26.44	**BG80-../DPE16XB4**	266	17900	-
15	51	2800	1.5	29.36	**BG80-../DPE16XB4**	266	18900	-
15	43.5	3250	1.3	34.22	**BG80-../DPE16XB4**	266	20200	-
15	39	3650	1.15	38.00	**BG80-../DPE16XB4**	266	21300	-
15	34	4200	1.0	43.94	**BG80-../DPE16XB4**	266	22600	-
15	30.5	4650	0.9	48.80	**BG80-../DPE16XB4**	266	23800	-

15 kW

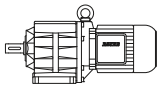

P_N	50 Hz			i	Type	m	F_{RN}	F_{RV}
	n_2	M_2	f_B					
[kW]	[1/min]	[Nm]	[—]	[:1]		[kg]	[N]	[N]
15	50	2850	2.9	29.78	**BG90-../DPE16XB4**	356	65000	-
15	45.5	3100	2.7	32.62	**BG90-../DPE16XB4**	356	65000	-
15	39	3650	2.3	38.21	**BG90-../DPE16XB4**	356	65000	-
15	35.5	4000	2.1	41.85	**BG90-../DPE16XB4**	356	65000	-
15	30.5	4650	1.8	48.82	**BG90-../DPE16XB4**	356	65000	-
15	28	5100	1.65	53.46	**BG90-../DPE16XB4**	356	65000	-
15	26	5500	1.25	57.04	**BG90Z-../DPE16XB4**	415	65000	-
15	24	5900	1.25	62.47	**BG90Z-../DPE16XB4**	415	65000	-
15	19.5	7300	1.15	76.61	**BG90Z-../DPE16XB4**	415	65000	-
15	18	7900	1.05	83.91	**BG90Z-../DPE16XB4**	415	65000	-
15	15.5	9200	0.91	96.53	**BG90Z-../DPE16XB4**	415	65000	-
15	14	10200	0.82	105.7	**BG90Z-../DPE16XB4**	415	65000	-
15	32	4450	3.2	46.43	**BG100-../DPE16XB4**	526	90000	-
15	29	4900	2.9	51.70	**BG100-../DPE16XB4**	526	90000	-
15	23.5	6000	2.6	63.49	**BG100-../DPE16XB4**	526	90000	-
15	21	6800	2.3	70.69	**BG100-../DPE16XB4**	526	90000	-
15	18.5	7700	2.1	80.85	**BG100-../DPE16XB4**	526	90000	-
15	16.5	8600	1.95	90.02	**BG100-../DPE16XB4**	526	90000	-
15	14	10200	1.65	107.5	**BG100-../DPE16XB4**	526	90000	-
15	12.5	11400	1.45	119.7	**BG100-../DPE16XB4**	526	90000	-
15	11	13000	1.3	139.1	**BG100-../DPE16XB4**	526	90000	-
15	9.6	14900	1.15	154.8	**BG100-../DPE16XB4**	526	90000	-
15	8.3	17200	0.98	178.6	**BG100-../DPE16XB4**	526	90000	-
15	7.5	19100	0.88	198.8	**BG100-../DPE16XB4**	526	90000	-

18.5 kW

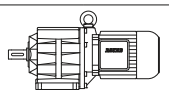

P_N	50 Hz			i	Type	m	F_{RN}	F_{RV}
	n_2	M_2	f_B					
[kW]	[1/min]	[Nm]	[—]	[:1]		[kg]	[N]	[N]
18.5	600	290	1.05	2.47	**BG50-../DPE18LB4**	200	2900	-
18.5	420	420	0.83	3.55	**BG50-../DPE18LB4**	200	3300	-
18.5	590	295	1.8	2.52	**BG60-../DPE18LB4**	229	6200	-
18.5	400	440	1.4	3.74	**BG60-../DPE18LB4**	229	7100	-
18.5	300	580	1.2	4.98	**BG60-../DPE18LB4**	229	7800	-
18.5	220	800	0.98	6.88	**BG60-../DPE18LB4**	229	8600	-
18.5	163	1080	0.82	9.13	**BG60-../DPE18LB4**	229	9800	-
18.5	300	580	2.6	4.95	**BG70-../DPE18LB4**	257	6900	-
18.5	255	690	2.5	5.87	**BG70-../DPE18LB4**	257	8200	-
18.5	210	840	2.6	7.14	**BG70-../DPE18LB4**	257	8800	-
18.5	175	1000	2.3	8.48	**BG70-../DPE18LB4**	257	9500	-
18.5	147	1200	1.9	10.09	**BG70-../DPE18LB4**	257	10200	-
18.5	124	1420	1.6	11.97	**BG70-../DPE18LB4**	257	11200	-
18.5	114	1540	1.5	13.08	**BG70-../DPE18LB4**	257	11600	-
18.5	96	1840	1.25	15.53	**BG70-../DPE18LB4**	257	12700	-
18.5	84	2100	1.1	17.68	**BG70-../DPE18LB4**	257	13400	-
18.5	71	2450	0.94	20.98	**BG70-../DPE18LB4**	257	14600	-
18.5	65	2700	0.85	22.92	**BG70-../DPE18LB4**	257	15100	-
18.5	130	1350	3.1	11.43	**BG80-../DPE18LB4**	311	11600	-
18.5	117	1510	2.8	12.69	**BG80-../DPE18LB4**	311	12400	-
18.5	95	1850	2.3	15.62	**BG80-../DPE18LB4**	311	13700	-
18.5	86	2050	2.0	17.35	**BG80-../DPE18LB4**	311	14600	-
18.5	75	2350	1.8	19.89	**BG80-../DPE18LB4**	311	15500	-
18.5	67	2600	1.6	22.09	**BG80-../DPE18LB4**	311	16500	-
18.5	56	3150	1.35	26.44	**BG80-../DPE18LB4**	311	17900	-
18.5	51	3450	1.2	29.36	**BG80-../DPE18LB4**	311	18900	-
18.5	43.5	4050	1.05	34.22	**BG80-../DPE18LB4**	311	20200	-
18.5	39	4500	0.93	38.00	**BG80-../DPE18LB4**	311	21300	-
18.5	34	5100	0.82	43.94	**BG80-../DPE18LB4**	311	22600	-
18.5	66	2650	3.2	22.62	**BG90-../DPE18LB4**	402	65000	-
18.5	60	2900	2.9	24.78	**BG90-../DPE18LB4**	402	65000	-
18.5	50	3500	2.4	29.78	**BG90-../DPE18LB4**	402	65000	-

18.5 kW

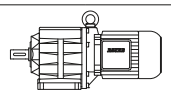

P_N	50 Hz			i	Type	m	F_{RN}	F_{RV}
	n_2	M_2	f_B					
[kW]	[1/min]	[Nm]	[—]	[:1]		[kg]	[N]	[N]
18.5	45.5	3850	2.2	32.62	**BG90-../DPE18LB4**	402	65000	-
18.5	39	4500	1.85	38.21	**BG90-../DPE18LB4**	402	65000	-
18.5	35.5	4950	1.7	41.85	**BG90-../DPE18LB4**	402	65000	-
18.5	30.5	5700	1.45	48.82	**BG90-../DPE18LB4**	402	65000	-
18.5	28	6300	1.35	53.46	**BG90-../DPE18LB4**	402	65000	-
18.5	26	6700	1.0	57.04	**BG90Z-../DPE18LB4**	456	65000	-
18.5	24	7300	1.05	62.47	**BG90Z-../DPE18LB4**	456	65000	-
18.5	19.5	9000	0.93	76.61	**BG90Z-../DPE18LB4**	456	65000	-
18.5	18	9800	0.86	83.91	**BG90Z-../DPE18LB4**	456	65000	-
18.5	44	4000	3.2	33.71	**BG100-../DPE18LB4**	572	88500	-
18.5	39.5	4450	3.0	37.54	**BG100-../DPE18LB4**	572	90000	-
18.5	32	5500	2.6	46.43	**BG100-../DPE18LB4**	572	90000	-
18.5	29	6000	2.4	51.70	**BG100-../DPE18LB4**	572	90000	-
18.5	23.5	7500	2.1	63.49	**BG100-../DPE18LB4**	572	90000	-
18.5	21	8400	1.9	70.69	**BG100-../DPE18LB4**	572	90000	-
18.5	18.5	9500	1.75	80.85	**BG100-../DPE18LB4**	572	90000	-
18.5	16.5	10700	1.55	90.02	**BG100-../DPE18LB4**	572	90000	-
18.5	14	12600	1.35	107.5	**BG100-../DPE18LB4**	572	90000	-
18.5	12.5	14100	1.2	119.7	**BG100-../DPE18LB4**	572	90000	-
18.5	11	16000	1.05	139.1	**BG100-../DPE18LB4**	572	90000	-
18.5	9.6	18400	0.91	154.8	**BG100-../DPE18LB4**	572	90000	-

22 kW

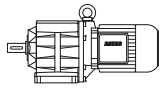

P_N	50 Hz			i	Type	m	F_{RN}	F_{RV}
	n_2	M_2	f_B					
[kW]	[1/min]	[Nm]	[—]	[:1]		[kg]	[N]	[N]
22	300	700	2.1	4.95	**BG70-../DPE18XB4**	275	6900	-
22	255	820	2.1	5.87	**BG70-../DPE18XB4**	275	8200	-
22	210	1000	2.2	7.14	**BG70-../DPE18XB4**	275	8800	-
22	174	1200	1.9	8.48	**BG70-../DPE18XB4**	275	9500	-
22	147	1420	1.6	10.09	**BG70-../DPE18XB4**	275	10200	-
22	124	1690	1.35	11.97	**BG70-../DPE18XB4**	275	11200	-
22	113	1850	1.25	13.08	**BG70-../DPE18XB4**	275	11600	-
22	95	2200	1.05	15.53	**BG70-../DPE18XB4**	275	12700	-
22	84	2500	0.92	17.68	**BG70-../DPE18XB4**	275	13400	-
22	250	840	3.2	5.94	**BG80-../DPE18XB4**	329	8300	-
22	225	930	3.2	6.60	**BG80-../DPE18XB4**	329	9100	-
22	178	1180	3.2	8.30	**BG80-../DPE18XB4**	329	10400	-
22	161	1300	3.0	9.21	**BG80-../DPE18XB4**	329	10800	-
22	130	1610	2.6	11.43	**BG80-../DPE18XB4**	329	11600	-
22	117	1790	2.3	12.69	**BG80-../DPE18XB4**	329	12400	-
22	95	2200	1.9	15.62	**BG80-../DPE18XB4**	329	13700	-
22	86	2400	1.75	17.35	**BG80-../DPE18XB4**	329	14600	-
22	75	2800	1.5	19.89	**BG80-../DPE18XB4**	329	15500	-
22	67	3100	1.35	22.09	**BG80-../DPE18XB4**	329	16500	-
22	56	3750	1.1	26.44	**BG80-../DPE18XB4**	329	17900	-
22	51	4100	1.0	29.36	**BG80-../DPE18XB4**	329	18900	-
22	43.5	4800	0.88	34.22	**BG80-../DPE18XB4**	329	20200	-
22	83	2500	3.3	17.96	**BG90-../DPE18XB4**	420	59800	-
22	75	2800	3.0	19.67	**BG90-../DPE18XB4**	420	62400	-
22	66	3150	2.7	22.62	**BG90-../DPE18XB4**	420	65000	-
22	60	3500	2.4	24.78	**BG90-../DPE18XB4**	420	65000	-
22	50	4200	2.0	29.78	**BG90-../DPE18XB4**	420	65000	-
22	45.5	4600	1.85	32.62	**BG90-../DPE18XB4**	420	65000	-
22	39	5300	1.6	38.21	**BG90-../DPE18XB4**	420	65000	-
22	35.5	5900	1.4	41.85	**BG90-../DPE18XB4**	420	65000	-
22	30.5	6800	1.25	48.82	**BG90-../DPE18XB4**	420	65000	-
22	28	7500	1.1	53.46	**BG90-../DPE18XB4**	420	65000	-
22	26	8000	0.85	57.04	**BG90Z-../DPE18XB4**	474	65000	-
22	24	8700	0.86	62.47	**BG90Z-../DPE18XB4**	474	65000	-
22	44	4750	2.7	33.71	**BG100-../DPE18XB4**	590	88500	-
22	39.5	5300	2.5	37.54	**BG100-../DPE18XB4**	590	90000	-

22 kW

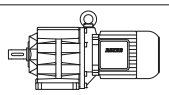

P_N	50 Hz			i	Type	m	F_{RN}	F_{RV}
	n_2	M_2	f_B					
[kW]	[1/min]	[Nm]	[—]	[:1]		[kg]	[N]	[N]
22	32	6500	2.2	46.43	**BG100-../DPE18XB4**	590	90000	-
22	29	7200	2.0	51.70	**BG100-../DPE18XB4**	590	90000	-
22	23.5	8900	1.75	63.49	**BG100-../DPE18XB4**	590	90000	-
22	21	10000	1.6	70.69	**BG100-../DPE18XB4**	590	90000	-
22	18.5	11300	1.45	80.85	**BG100-../DPE18XB4**	590	90000	-
22	16.5	12700	1.3	90.02	**BG100-../DPE18XB4**	590	90000	-
22	14	15000	1.1	107.5	**BG100-../DPE18XB4**	590	90000	-
22	12.5	16800	1.0	119.7	**BG100-../DPE18XB4**	590	90000	-
22	11	19100	0.88	139.1	**BG100-../DPE18XB4**	590	90000	-

30 kW

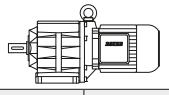

P_N	50 Hz			i	Type	m	F_{RN}	F_{RV}
	n_2	M_2	f_B					
[kW]	[1/min]	[Nm]	[—]	[:1]		[kg]	[N]	[N]
30	300	950	1.55	4.95	**BG70-../DPE20XA4**	430	6900	-
30	255	1120	1.55	5.87	**BG70-../DPE20XA4**	430	8200	-
30	210	1360	1.6	7.14	**BG70-../DPE20XA4**	430	8800	-
30	175	1630	1.4	8.48	**BG70-../DPE20XA4**	430	9500	-
30	147	1940	1.2	10.09	**BG70-../DPE20XA4**	430	10200	-
30	124	2300	1.0	11.97	**BG70-../DPE20XA4**	430	11200	-
30	114	2500	0.92	13.08	**BG70-../DPE20XA4**	430	11600	-
30	250	1140	2.3	5.94	**BG80-../DPE20XA4**	482	8300	-
30	225	1270	2.3	6.60	**BG80-../DPE20XA4**	482	9100	-
30	179	1600	2.4	8.30	**BG80-../DPE20XA4**	482	10400	-
30	161	1770	2.2	9.21	**BG80-../DPE20XA4**	482	10800	-
30	130	2200	1.9	11.43	**BG80-../DPE20XA4**	482	11600	-
30	117	2400	1.75	12.69	**BG80-../DPE20XA4**	482	12400	-
30	95	3000	1.4	15.62	**BG80-../DPE20XA4**	482	13700	-
30	86	3300	1.25	17.35	**BG80-../DPE20XA4**	482	14600	-
30	75	3800	1.1	19.89	**BG80-../DPE20XA4**	482	15500	-
30	67	4250	0.99	22.09	**BG80-../DPE20XA4**	482	16500	-
30	56	5100	0.82	26.44	**BG80-../DPE20XA4**	482	17900	-
30	136	2100	3.3	10.90	**BG90-../DPE20XA4**	574	52300	-
30	111	2550	2.9	13.37	**BG90-../DPE20XA4**	574	55000	-
30	102	2800	2.8	14.64	**BG90-../DPE20XA4**	574	57000	-
30	83	3450	2.4	17.96	**BG90-../DPE20XA4**	574	59800	-
30	76	3750	2.2	19.67	**BG90-../DPE20XA4**	574	62400	-
30	66	4300	1.95	22.62	**BG90-../DPE20XA4**	574	65000	-
30	60	4750	1.75	24.78	**BG90-../DPE20XA4**	574	65000	-
30	50	5700	1.45	29.78	**BG90-../DPE20XA4**	574	65000	-
30	45.5	6200	1.35	32.62	**BG90-../DPE20XA4**	574	65000	-
30	39	7300	1.15	38.21	**BG90-../DPE20XA4**	574	65000	-
30	35.5	8000	1.05	41.85	**BG90-../DPE20XA4**	574	65000	-
30	30.5	9300	0.9	48.82	**BG90-../DPE20XA4**	574	65000	-
30	28	10200	0.82	53.46	**BG90-../DPE20XA4**	574	65000	-
30	119	2400	3.0	12.45	**BG100-../DPE20XA4**	743	72100	-
30	86	3300	3.1	17.39	**BG100-../DPE20XA4**	743	82400	-
30	62	4600	2.4	23.95	**BG100-../DPE20XA4**	743	87900	-
30	44	6500	2.0	33.71	**BG100-../DPE20XA4**	743	88500	-
30	39.5	7200	1.85	37.54	**BG100-../DPE20XA4**	743	90000	-
30	32	8900	1.6	46.43	**BG100-../DPE20XA4**	743	90000	-
30	29	9800	1.45	51.70	**BG100-../DPE20XA4**	743	90000	-
30	23.5	12100	1.25	63.49	**BG100-../DPE20XA4**	743	90000	-
30	21	13600	1.15	70.69	**BG100-../DPE20XA4**	743	90000	-
30	18.5	15400	1.05	80.85	**BG100-../DPE20XA4**	743	90000	-
30	16.5	17300	0.97	90.02	**BG100-../DPE20XA4**	743	90000	-
30	14	20400	0.82	107.5	**BG100-../DPE20XA4**	743	90000	-

37 kW

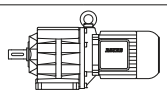

P_N	50 Hz			i	Type	m	F_{RN}	F_{RV}
	n_2	M_2	f_B					
[kW]	[1/min]	[Nm]	[—]	[:1]		[kg]	[N]	[N]
37	300	1170	1.3	4.95	**BG70-../DPE22MA4**	486	6900	-
37	255	1380	1.25	5.87	**BG70-../DPE22MA4**	486	8200	-
37	210	1680	1.3	7.14	**BG70-../DPE22MA4**	486	8800	-
37	175	2000	1.15	8.48	**BG70-../DPE22MA4**	486	9500	-
37	250	1410	1.9	5.94	**BG80-../DPE22MA4**	538	8300	-
37	225	1570	1.9	6.60	**BG80-../DPE22MA4**	538	9100	-
37	179	1970	1.9	8.30	**BG80-../DPE22MA4**	538	10400	-
37	161	2150	1.85	9.21	**BG80-../DPE22MA4**	538	10800	-
37	130	2700	1.55	11.43	**BG80-../DPE22MA4**	538	11600	-
37	117	3000	1.4	12.69	**BG80-../DPE22MA4**	538	12400	-
37	95	3700	1.15	15.62	**BG80-../DPE22MA4**	538	13700	-
37	86	4100	1.0	17.35	**BG80-../DPE22MA4**	538	14600	-
37	186	1890	3.3	7.97	**BG90-../DPE22MA4**	630	47900	-
37	149	2350	2.9	9.95	**BG90-../DPE22MA4**	630	50500	-
37	136	2550	2.7	10.90	**BG90-../DPE22MA4**	630	52300	-
37	111	3150	2.4	13.37	**BG90-../DPE22MA4**	630	55000	-
37	102	3450	2.2	14.64	**BG90-../DPE22MA4**	630	57000	-
37	83	4250	1.95	17.96	**BG90-../DPE22MA4**	630	59800	-
37	76	4600	1.85	19.67	**BG90-../DPE22MA4**	630	62400	-
37	66	5300	1.6	22.62	**BG90-../DPE22MA4**	630	65000	-
37	60	5800	1.45	24.78	**BG90-../DPE22MA4**	630	65000	-
37	50	7000	1.2	29.78	**BG90-../DPE22MA4**	630	65000	-
37	45.5	7700	1.1	32.62	**BG90-../DPE22MA4**	630	65000	-
37	119	2950	2.5	12.45	**BG100-../DPE22MA4**	799	72100	-
37	86	4100	2.5	17.39	**BG100-../DPE22MA4**	799	82400	-
37	62	5600	2.0	23.95	**BG100-../DPE22MA4**	799	87900	-
37	44	8000	1.6	33.71	**BG100-../DPE22MA4**	799	88500	-
37	39.5	8900	1.5	37.54	**BG100-../DPE22MA4**	799	90000	-
37	32	11000	1.3	46.43	**BG100-../DPE22MA4**	799	90000	-
37	29	12100	1.2	51.70	**BG100-../DPE22MA4**	799	90000	-
37	23.5	15000	1.05	63.49	**BG100-../DPE22MA4**	799	90000	-

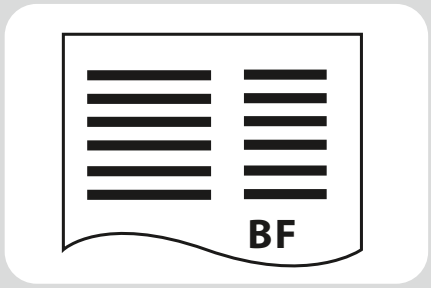

7

BF-series shaft-mounted geared motors - Selection

Description of shaft-mounted gear units 221
Sizes 221
Bauer service factors (f_B) for shaft-mounted geared motors 221
Continuous operation without switching frequency Z ≤1/h 221
Switching duty 221
Bauer service factor 221
Explanation of shock classification 221
Key to abbreviations 222
Selection tables, shaft-mounted geared motors 222
Selection - shaft-mounted geared motors DSE - IE1 223
Selection - shaft-mounted geared motors DHE - IE2 255
Selection - shaft-mounted geared motors DPE - IE3 289

Sizes

Bauer BF-series shaft-mounted geared motors are normally supplied in ten frame sizes and with torques of 90 to 18,500 Nm. Higher torques are available on request. The gear unit is accommodated in a sturdy cast housing

Bauer service factors (f_B) for shaft-mounted geared motors

Of the numerous factors influencing the total loading of a gear unit, the most important include:

- Mean torque (rated torque)
- Daily operating hours
- Severity of torque peaks (shock classification)
- Frequency of torque peaks (switching duty)

These factors can be represented in a simplified and practical manner by **service factors**. The tables and explanations below attempt to provide an objective description of the **shock classification**, rather than a classification of the driven machinery. Experience has shown that, in addition to the torque shocks caused by the driven machinery (M_x/M_N), above all the power transmission components (clutches, chains etc.) plus the mass ratios play a decisive role in this.

See Bauer special imprint SD32 for more information.

Continuous operation without switching frequency Z ≤1/h

Factor f_1 for shock classification and operating time

Shock classification	Operating hours per day t_d	>4 h ≤8 h	>8 h ≤16 h	>16 h ≤24 h
I		0,8	1,0	1,2
II		1,05	1,25	1,45
III		1,45	1,55	1,7

Switching duty

Factor f_2 for shock classification and switching frequency

Switching frequency in single- shift operation t_d ≤8 h/d

Shock classification	1 <Z ≤100	100 <Z ≤1000	1000 <Z
I	0,95	1,1	1,15
II	1,2	1,35	1,4
III	1,55	1,6	1,6

Switching frequency in multiple- shift operation t_d >8 h/d

Shock classification	1 <Z ≤100	100 <Z ≤1000	1000 <Z
I	1,3	1,45	1,5
II	1,5	1,6	1,65
III	1,75	1,8	1,8

Bauer service factor

Bauer Service factor $f_B = f_1$ or $f_B = f_2$

For example: Shock classification II for Z = 100 switching operations per hour and multiple-shift operation yields a service factor $f_B = f_2 = 1.5$

Explanation of shock classification

Shock classification I:
Uniform without shock loads. All the following requirements must be satisfied:

- FI ≤1,3
- M_x/M_N ≤1,0
- Shock-absorbing power transmission components (e.g. highly resilient, zero-play coupling, φ N ≥5°)

Shock classification II:
Moderate shock loads. At least one of the following conditions applies:
- 1,3 <FI ≤4
- 1 <M_x/M_N ≤1,6
- Shock-neutral power transmission components (e.g. gear wheels, zero- play rigid coupling or resilient coupling with φ N <5°)
-

Shock classification III:
Heavy shock loads. At least one of the following conditions applies:
- FI >4
- 1,6 <M_x/M_N ≤2,0
- Shock-amplifying power transmission components (e.g. coupling with play or chain drive)

Key to abbreviations

Z	Switching duty number of switching operations per hour
t_d	Daily operating time in hours (h/d)
FI	Factor of inertia FI = (J_{ext} + J_{rot})/J_{rot}
J_{ext}	Mass moment of inertia of the machine to be driven, in relation to the motor's rotor shaft (kgm2)
J_{rot}	Mass moment of inertia of the motor rotor (kgm^2)
M_x	Highest impact torque above the static torque which can occur during normal operation or in emergency situations
M_N	Required static load torque for the application
M_x/M_N	Relative torque - Factor
φ $_N$	Torsional offset of the resilient coupling under rated torque

Selection tables, shaft-mounted geared motors

Key to abbreviations

P	Rated output
n_2	Rated speed of the output shaft
i	Gear reduction ratio
M_2	Rated torque at the output shaft
f_B	Bauer service factor
F_{RN}	Maximum permissible radial force with normal bearings
F_{RV}	Maximum permissible radial force with reinforced bearings in each case with standard solid shaft (Code -.1 und -.2)

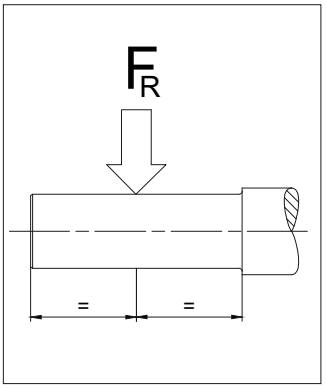

Use the selection tables to determine the size of geared motor required. The codes clearly define the Type of gear unit and output shaft (see chapter 11 „dimensional drawings shaft-mounted gear motors").

Motor power overload protection
Motor-power ratings, particularly in conjunction with four-stage and multi-stage gear units, are more than ample in some instances. Consequently, and in much the same way as with low-power motors, rated current is not a measure of gear loading and cannot be used to protect the gear unit against overloading. It is advisable to provide gears at risk from excessive load or blockage with a protective mechanism (e. g., sliding clutch, sliding hub, shear pin or an alternative).

0.03 kW

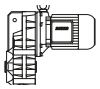

P_N	50 Hz			i	Type	m		
	n_2	M_2	f_B					
[kW]	[1/min]	[Nm]	[—]	[:1]		[kg]	[N]	[N]
0.03	9.0	31.5	7.6	151.2	**BF10Z-../D04LA4**	21	6400	-
0.03	8.2	34.5	7.0	166.2	**BF10Z-../D04LA4**	21	6400	-
0.03	7.5	38	6.3	180.1	**BF10Z-../D04LA4**	21	6400	-
0.03	6.9	41.5	5.8	198.0	**BF10Z-../D04LA4**	21	6400	-
0.03	6.3	45	5.3	214.5	**BF10Z-../D04LA4**	21	6400	-
0.03	5.8	49	4.9	235.8	**BF10Z-../D04LA4**	21	6400	-
0.03	5.3	54	4.4	257.4	**BF10Z-../D04LA4**	21	6400	-
0.03	4.8	59	4.1	283.1	**BF10Z-../D04LA4**	21	6400	-
0.03	4.2	68	3.5	324.3	**BF10Z-../D04LA4**	21	6400	-
0.03	3.8	75	3.2	356.6	**BF10Z-../D04LA4**	21	6400	-
0.03	3.6	79	3.0	380.2	**BF10Z-../D04LA4**	21	6400	-
0.03	3.3	86	2.8	418.0	**BF10Z-../D04LA4**	21	6400	-
0.03	2.9	98	2.4	469.5	**BF10Z-../D04LA4**	21	6400	-
0.03	2.6	110	2.2	539.1	**BF10Z-../D04LA4**	21	6400	-
0.03	2.3	124	1.95	592.8	**BF10Z-../D04LA4**	21	6400	-
0.03	1.8	97	2.7	768.2	**BF10G06-../D04LA4**	25	6400	-
0.03	1.6	110	2.4	845.1	**BF10G06-../D04LA4**	25	6400	-
0.03	1.4	130	2.0	994.0	**BF10G06-../D04LA4**	25	6400	-
0.03	1.2	159	1.65	1190	**BF10G06-../D04LA4**	25	6400	-
0.03	0.95	210	1.25	1452	**BF10G06-../D04LA4**	25	6400	-
0.03	0.8	260*	1.0	1744	**BF10G06-../D04LA4**	25	6400	-
0.03	0.65	260*	1.0	2096	**BF10G06-../D04LA4**	25	6400	-
0.03	0.55	260*	1.0	2467	**BF10G06-../D04LA4**	25	6400	-
0.03	0.46	260*	1.0	2952	**BF10G06-../D04LA4**	25	6400	-
0.03	0.42	260*	1.0	3220	**BF10G06-../D04LA4**	25	6400	-
0.03	0.35	260*	1.0	3942	**BF10G06-../D04LA4**	25	6400	-
0.03	0.3	260*	1.0	4569	**BF10G06-../D04LA4**	25	6400	-
0.03	0.24	260*	1.0	5709	**BF10G06-../D04LA4**	25	6400	-
0.03	0.21	260*	1.0	6550	**BF10G06-../D04LA4**	25	6400	-
0.03	0.19	260*	1.0	7144	**BF10G06-../D04LA4**	25	6400	-
0.03	0.16	260*	1.0	8681	**BF10G06-../D04LA4**	25	6400	-
0.03	0.15	260*	1.0	9471	**BF10G06-../D04LA4**	25	6400	-
0.03	1.2	162	2.8	1140	**BF20G06-../D04LA4**	31	7900	-
0.03	1.0	200	2.3	1392	**BF20G06-../D04LA4**	31	7900	-
0.03	0.9	230	2.0	1533	**BF20G06-../D04LA4**	31	7900	-
0.03	0.8	265	1.75	1764	**BF20G06-../D04LA4**	31	7900	-
0.03	0.65	345	1.35	2192	**BF20G06-../D04LA4**	31	7900	-
0.03	0.55	410	1.1	2579	**BF20G06-../D04LA4**	31	7900	-
0.03	0.48	460*	1.0	2829	**BF20G06-../D04LA4**	31	7900	-
0.03	0.44	460*	1.0	3086	**BF20G06-../D04LA4**	31	7900	-
0.03	0.36	460*	1.0	3778	**BF20G06-../D04LA4**	31	7900	-
0.03	0.31	460*	1.0	4379	**BF20G06-../D04LA4**	31	7900	-
0.03	0.25	460*	1.0	5471	**BF20G06-../D04LA4**	31	7900	-
0.03	0.2	460*	1.0	6847	**BF20G06-../D04LA4**	31	7900	-
0.03	0.17	460*	1.0	8320	**BF20G06-../D04LA4**	31	7900	-
0.03	0.15	460*	1.0	9077	**BF20G06-../D04LA4**	31	7900	-
0.03	1.0	200	3.2	1404	**BF30G06-../D04LA4**	41	7400	-
0.03	0.85	245	2.6	1686	**BF30G06-../D04LA4**	41	7400	-
0.03	0.7	315	2.0	2026	**BF30G06-../D04LA4**	41	7400	-
0.03	0.6	370	1.7	2386	**BF30G06-../D04LA4**	41	7400	-
0.03	0.48	485	1.3	2854	**BF30G06-../D04LA4**	41	7400	-
0.03	0.39	610	1.05	3493	**BF30G06-../D04LA4**	41	7400	-
0.03	0.36	630*	1.0	3811	**BF30G06-../D04LA4**	41	7400	-
0.03	0.31	630*	1.0	4417	**BF30G06-../D04LA4**	41	7400	-
0.03	0.27	630*	1.0	5060	**BF30G06-../D04LA4**	41	7400	-
0.03	0.22	630*	1.0	6333	**BF30G06-../D04LA4**	41	7400	-
0.03	0.19	630*	1.0	7206	**BF30G06-../D04LA4**	41	7400	-
0.03	0.18	630*	1.0	7861	**BF30G06-../D04LA4**	41	7400	-
0.03	0.15	630*	1.0	9157	**BF30G06-../D04LA4**	41	7400	-

The torques marked (*) are maximum permissible torques for service factor f_B=1.0.

0.04 kW

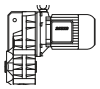

P_N	50 Hz			i	Type	m		
	n_2	M_2	f_B					
[kW]	[1/min]	[Nm]	[—]	[:1]		[kg]	[N]	[N]
0.04	9.0	42	5.7	151.2	**BF10Z-../D04LA4**	21	6400	-
0.04	8.2	46.5	5.2	166.2	**BF10Z-../D04LA4**	21	6400	-
0.04	7.5	50	4.8	180.1	**BF10Z-../D04LA4**	21	6400	-
0.04	6.9	55	4.4	198.0	**BF10Z-../D04LA4**	21	6400	-
0.04	6.3	60	4.0	214.5	**BF10Z-../D04LA4**	21	6400	-
0.04	5.8	65	3.7	235.8	**BF10Z-../D04LA4**	21	6400	-
0.04	5.3	72	3.3	257.4	**BF10Z-../D04LA4**	21	6400	-
0.04	4.8	79	3.0	283.1	**BF10Z-../D04LA4**	21	6400	-
0.04	4.2	90	2.7	324.3	**BF10Z-../D04LA4**	21	6400	-
0.04	3.8	100	2.4	356.6	**BF10Z-../D04LA4**	21	6400	-
0.04	3.6	106	2.3	380.2	**BF10Z-../D04LA4**	21	6400	-
0.04	3.3	115	2.1	418.0	**BF10Z-../D04LA4**	21	6400	-
0.04	2.9	131	1.85	469.5	**BF10Z-../D04LA4**	21	6400	-
0.04	2.6	146	1.65	539.1	**BF10Z-../D04LA4**	21	6400	-
0.04	2.3	166	1.45	592.8	**BF10Z-../D04LA4**	21	6400	-
0.04	2.1	119	2.2	643.8	**BF10G06-../D04LA4**	25	6400	-
0.04	1.8	150	1.75	768.2	**BF10G06-../D04LA4**	25	6400	-
0.04	1.6	170	1.55	845.1	**BF10G06-../D04LA4**	25	6400	-
0.04	1.4	199	1.3	994.0	**BF10G06-../D04LA4**	25	6400	-
0.04	1.2	235	1.1	1190	**BF10G06-../D04LA4**	25	6400	-
0.04	3.0	127	3.3	460.0	**BF20Z-../D04LA4**	28	7900	-
0.04	1.9	141	3.3	736.1	**BF20G06-../D04LA4**	31	7900	-
0.04	1.7	159	2.9	810.0	**BF20G06-../D04LA4**	31	7900	-
0.04	1.5	183	2.5	952.7	**BF20G06-../D04LA4**	31	7900	-
0.04	1.2	240	1.9	1140	**BF20G06-../D04LA4**	31	7900	-
0.04	1.0	295	1.55	1392	**BF20G06-../D04LA4**	31	7900	-
0.04	0.9	335	1.35	1533	**BF20G06-../D04LA4**	31	7900	-
0.04	0.8	385	1.2	1764	**BF20G06-../D04LA4**	31	7900	-
0.04	1.2	240	2.6	1150	**BF30G06-../D04LA4**	41	7400	-
0.04	1.1	265	2.4	1286	**BF30G06-../D04LA4**	41	7400	-
0.04	1.0	295	2.1	1404	**BF30G06-../D04LA4**	41	7400	-
0.04	0.85	355	1.75	1686	**BF30G06-../D04LA4**	41	7400	-
0.04	0.7	450	1.4	2026	**BF30G06-../D04LA4**	41	7400	-
0.04	0.6	530	1.2	2386	**BF30G06-../D04LA4**	41	7400	-

0.06 kW

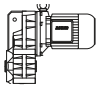

P_N	50 Hz			i	Type	m		
	n_2	M_2	f_B					
[kW]	[1/min]	[Nm]	[—]	[:1]		[kg]	[N]	[N]
0.06	24	23.5	10	56.39	**BF10-../D06LA4**	23	4550	-
0.06	22	26	9.2	61.55	**BF10-../D06LA4**	23	4700	-
0.06	20	28.5	8.4	67.69	**BF10-../D06LA4**	23	4900	-
0.06	17.5	32.5	7.4	77.55	**BF10-../D06LA4**	23	5100	-
0.06	16	35.5	6.8	85.27	**BF10-../D06LA4**	23	5300	-
0.06	15	38	6.3	90.91	**BF10-../D06LA4**	23	5400	-
0.06	14	40.5	5.9	99.97	**BF10-../D06LA4**	23	5600	-
0.06	12.5	45.5	5.3	112.3	**BF10-../D06LA4**	23	5900	-
0.06	11	52	4.6	123.5	**BF10-../D06LA4**	23	6100	-
0.06	10.5	54	4.4	128.9	**BF10-../D06LA4**	23	6200	-
0.06	9.6	59	4.1	141.8	**BF10-../D06LA4**	23	6400	-
0.06	7.5	76	3.2	180.1	**BF10Z-../D06LA4**	24	6400	-
0.06	6.9	83	2.9	198.0	**BF10Z-../D06LA4**	24	6400	-
0.06	6.3	90	2.7	214.5	**BF10Z-../D06LA4**	24	6400	-
0.06	5.8	98	2.4	235.8	**BF10Z-../D06LA4**	24	6400	-
0.06	5.3	108	2.2	257.4	**BF10Z-../D06LA4**	24	6400	-
0.06	4.8	119	2.0	283.1	**BF10Z-../D06LA4**	24	6400	-
0.06	4.2	136	1.75	324.3	**BF10Z-../D06LA4**	24	6400	-
0.06	3.8	150	1.6	356.6	**BF10Z-../D06LA4**	24	6400	-
0.06	3.6	159	1.5	380.2	**BF10Z-../D06LA4**	24	6400	-
0.06	3.3	173	1.4	418.0	**BF10Z-../D06LA4**	24	6400	-
0.06	2.9	197	1.2	469.5	**BF10Z-../D06LA4**	24	6400	-
0.06	2.6	220	1.1	539.1	**BF10Z-../D06LA4**	24	6400	-
0.06	2.3	245	0.98	592.8	**BF10Z-../D06LA4**	24	6400	-

The torques marked (*) are maximum permissible torques for service factor f_B=1.0.

0.06 kW

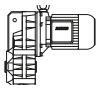

P_N	50 Hz			i	Type	m		
	n_2	M_2	f_B					
[kW]	[1/min]	[Nm]	[—]	[:1]		[kg]	[N]	[N]
0.06	2.1	210	1.25	643.8	**BF10G06-../D06LA4**	28	6400	-
0.06	1.8	255	1.0	768.2	**BF10G06-../D06LA4**	28	6400	-
0.06	1.6	290	0.9	845.1	**BF10G06-../D06LA4**	28	6400	-
0.06	4.2	136	3.1	325.2	**BF20Z-../D06LA4**	31	7900	-
0.06	4.0	143	2.9	339.1	**BF20Z-../D06LA4**	31	7900	-
0.06	3.7	154	2.7	373.1	**BF20Z-../D06LA4**	31	7900	-
0.06	3.3	173	2.4	418.1	**BF20Z-../D06LA4**	31	7900	-
0.06	3.0	191	2.2	460.0	**BF20Z-../D06LA4**	31	7900	-
0.06	2.7	157	2.9	513.7	**BF20G06-../D06LA4**	34	7900	-
0.06	2.2	200	2.3	617.0	**BF20G06-../D06LA4**	34	7900	-
0.06	1.9	240	1.9	736.1	**BF20G06-../D06LA4**	34	7900	-
0.06	1.7	270	1.7	810.0	**BF20G06-../D06LA4**	34	7900	-
0.06	1.5	310	1.5	952.7	**BF20G06-../D06LA4**	34	7900	-
0.06	1.2	400	1.15	1140	**BF20G06-../D06LA4**	34	7900	-
0.06	1.0	485	0.95	1392	**BF20G06-../D06LA4**	34	7900	-
0.06	3.3	173	3.3	412.6	**BF30Z-../D06LA4**	42	7400	-
0.06	3.0	191	3.0	463.3	**BF30Z-../D06LA4**	42	7400	-
0.06	2.6	220	2.6	537.0	**BF30Z-../D06LA4**	42	7400	-
0.06	2.3	245	2.3	590.7	**BF30Z-../D06LA4**	42	7400	-
0.06	2.2	200	3.2	622.4	**BF30G06-../D06LA4**	45	7400	-
0.06	2.0	225	2.8	705.1	**BF30G06-../D06LA4**	45	7400	-
0.06	1.7	270	2.3	817.1	**BF30G06-../D06LA4**	45	7400	-
0.06	1.5	310	2.0	961.1	**BF30G06-../D06LA4**	45	7400	-
0.06	1.2	400	1.6	1150	**BF30G06-../D06LA4**	45	7400	-
0.06	1.1	435	1.45	1286	**BF30G06-../D06LA4**	45	7400	-
0.06	1.0	485	1.3	1404	**BF30G06-../D06LA4**	45	7400	-
0.06	0.85	580	1.1	1686	**BF30G06-../D06LA4**	45	7400	-
0.06	0.95	340	2.9	1484	**BF40G10-../D06LA4**	58	10600	-
0.06	0.75	460	2.2	1810	**BF40G10-../D06LA4**	58	10600	-
0.06	0.7	500	2.0	1997	**BF40G10-../D06LA4**	58	10600	-
0.06	0.55	710	1.4	2536	**BF40G10-../D06LA4**	58	10600	-
0.06	0.49	840	1.2	2810	**BF40G10-../D06LA4**	58	10600	-
0.06	0.7	520	2.7	2059	**BF50G10-../D06LA4**	86	13600	-
0.06	0.6	640	2.2	2360	**BF50G10-../D06LA4**	86	13600	-
0.06	0.49	860	1.65	2810	**BF50G10-../D06LA4**	86	13600	-
0.06	0.41	1090	1.3	3348	**BF50G10-../D06LA4**	86	13600	-
0.06	0.34	1370	1.0	4019	**BF50G10-../D06LA4**	86	13600	-
0.06	0.42	860	2.9	3237	**BF60G20-../D06LA4**	134	15300	43300
0.06	0.35	1130	2.2	3883	**BF60G20-../D06LA4**	134	15300	43300
0.06	0.3	1400	1.8	4646	**BF60G20-../D06LA4**	134	15300	43300
0.06	0.26	1700	1.45	5241	**BF60G20-../D06LA4**	134	15300	43300
0.06	0.23	1980	1.25	6014	**BF60G20-../D06LA4**	134	15300	43300
0.06	0.21	2200	1.15	6679	**BF60G20-../D06LA4**	134	15300	43300
0.06	0.24	1890	3.0	5691	**BF70G20-../D06LA4**	212	16100	47700
0.06	0.21	2200	2.6	6530	**BF70G20-../D06LA4**	212	16100	47700
0.06	0.19	2500	2.3	7248	**BF70G20-../D06LA4**	212	16100	47700
0.06	0.17	2850	2.0	8052	**BF70G20-../D06LA4**	212	16100	47700

0.09 kW

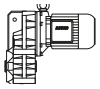

P_N	50 Hz			i	Type	m		
	n_2	M_2	f_B					
[kW]	[1/min]	[Nm]	[—]	[:1]		[kg]	[N]	[N]
0.09	34	25	9.6	39.75	**BF10-../D06LA4**	23	3950	-
0.09	31.5	27	8.9	43.06	**BF10-../D06LA4**	23	4100	-
0.09	29	29.5	8.1	47.35	**BF10-../D06LA4**	23	4250	-
0.09	26.5	32	7.5	51.28	**BF10-../D06LA4**	23	4400	-
0.09	24	35.5	6.8	56.39	**BF10-../D06LA4**	23	4550	-
0.09	22	39	6.2	61.55	**BF10-../D06LA4**	23	4700	-
0.09	20	42.5	5.6	67.69	**BF10-../D06LA4**	23	4900	-

The torques marked (*) are maximum permissible torques for service factor f_B=1.0.

0.09 kW

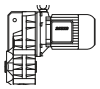

P_N	50 Hz			i	Type	m		
	n_2	M_2	f_B					
[kW]	[1/min]	[Nm]	[—]	[:1]		[kg]	[N]	[N]
0.09	17.5	49	4.9	77.55	**BF10-../D06LA4**	23	5100	-
0.09	16	53	4.5	85.27	**BF10-../D06LA4**	23	5300	-
0.09	15	57	4.2	90.91	**BF10-../D06LA4**	23	5400	-
0.09	14	61	3.9	99.97	**BF10-../D06LA4**	23	5600	-
0.09	12.5	68	3.5	112.3	**BF10-../D06LA4**	23	5900	-
0.09	11	78	3.1	123.5	**BF10-../D06LA4**	23	6100	-
0.09	10.5	81	3.0	128.9	**BF10-../D06LA4**	23	6200	-
0.09	9.6	89	2.7	141.8	**BF10-../D06LA4**	23	6400	-
0.09	9.0	95	2.5	151.2	**BF10Z-../D06LA4**	24	6400	-
0.09	8.2	104	2.3	166.2	**BF10Z-../D06LA4**	24	6400	-
0.09	7.5	114	2.1	180.1	**BF10Z-../D06LA4**	24	6400	-
0.09	6.9	124	1.95	198.0	**BF10Z-../D06LA4**	24	6400	-
0.09	6.3	136	1.75	214.5	**BF10Z-../D06LA4**	24	6400	-
0.09	5.8	148	1.6	235.8	**BF10Z-../D06LA4**	24	6400	-
0.09	5.3	162	1.5	257.4	**BF10Z-../D06LA4**	24	6400	-
0.09	4.8	179	1.35	283.1	**BF10Z-../D06LA4**	24	6400	-
0.09	4.2	200	1.2	324.3	**BF10Z-../D06LA4**	24	6400	-
0.09	3.8	225	1.05	356.6	**BF10Z-../D06LA4**	24	6400	-
0.09	3.6	235	1.0	380.2	**BF10Z-../D06LA4**	24	6400	-
0.09	3.3	260	0.92	418.0	**BF10Z-../D06LA4**	24	6400	-
0.09	2.9	295	0.81	469.5	**BF10Z-../D06LA4**	24	6400	-
0.09	2.6	270	0.96	536.0	**BF10G06-../D06LA4**	28	6400	-
0.09	6.3	136	3.1	216.9	**BF20Z-../D06LA4**	31	7900	-
0.09	5.8	148	2.8	235.9	**BF20Z-../D06LA4**	31	7900	-
0.09	5.3	162	2.6	259.6	**BF20Z-../D06LA4**	31	7900	-
0.09	4.6	186	2.3	295.5	**BF20Z-../D06LA4**	31	7900	-
0.09	4.2	200	2.1	325.2	**BF20Z-../D06LA4**	31	7900	-
0.09	4.0	210	2.0	339.1	**BF20Z-../D06LA4**	31	7900	-
0.09	3.7	230	1.85	373.1	**BF20Z-../D06LA4**	31	7900	-
0.09	3.3	260	1.6	418.1	**BF20Z-../D06LA4**	31	7900	-
0.09	3.0	285	1.45	460.0	**BF20Z-../D06LA4**	31	7900	-
0.09	2.7	260	1.75	513.7	**BF20G06-../D06LA4**	34	7900	-
0.09	2.2	330	1.4	617.0	**BF20G06-../D06LA4**	34	7900	-
0.09	1.9	390	1.2	736.1	**BF20G06-../D06LA4**	34	7900	-
0.09	1.7	440	1.05	810.0	**BF20G06-../D06LA4**	34	7900	-
0.09	1.5	500	0.92	952.7	**BF20G06-../D06LA4**	34	7900	-
0.09	4.7	182	3.2	289.8	**BF30Z-../D06LA4**	42	7400	-
0.09	4.4	195	2.9	310.7	**BF30Z-../D06LA4**	42	7400	-
0.09	4.0	210	2.7	341.8	**BF30Z-../D06LA4**	42	7400	-
0.09	3.6	235	2.4	375.1	**BF30Z-../D06LA4**	42	7400	-
0.09	3.3	260	2.2	412.6	**BF30Z-../D06LA4**	42	7400	-
0.09	3.0	285	2.0	463.3	**BF30Z-../D06LA4**	42	7400	-
0.09	2.6	330	1.75	537.0	**BF30Z-../D06LA4**	42	7400	-
0.09	2.3	370	1.55	590.7	**BF30Z-../D06LA4**	42	7400	-
0.09	2.2	330	1.9	622.4	**BF30G06-../D06LA4**	45	7400	-
0.09	2.0	370	1.7	705.1	**BF30G06-../D06LA4**	45	7400	-
0.09	1.7	435	1.45	817.1	**BF30G06-../D06LA4**	45	7400	-
0.09	1.5	500	1.25	961.1	**BF30G06-../D06LA4**	45	7400	-
0.09	1.2	630	1.0	1150	**BF30G06-../D06LA4**	45	7400	-
0.09	1.1	690	0.91	1286	**BF30G06-../D06LA4**	45	7400	-
0.09	1.0	770	0.82	1404	**BF30G06-../D06LA4**	45	7400	-
0.09	3.0	285	3.2	459.1	**BF40Z-../D06LA4**	53	10600	-
0.09	2.7	315	2.9	514.6	**BF40Z-../D06LA4**	53	10600	-
0.09	2.4	355	2.5	566.1	**BF40Z-../D06LA4**	53	10600	-
0.09	1.5	350	2.9	928.9	**BF40G10-../D06LA4**	58	10600	-
0.09	1.3	420	2.4	1106	**BF40G10-../D06LA4**	58	10600	-
0.09	1.1	540	1.85	1324	**BF40G10-../D06LA4**	58	10600	-
0.09	0.95	640	1.55	1484	**BF40G10-../D06LA4**	58	10600	-
0.09	0.75	840	1.2	1810	**BF40G10-../D06LA4**	58	10600	-
0.09	0.7	910	1.1	1997	**BF40G10-../D06LA4**	58	10600	-
0.09	1.2	500	2.8	1203	**BF50G10-../D06LA4**	86	13600	-
0.09	1.0	620	2.3	1359	**BF50G10-../D06LA4**	86	13600	-
0.09	0.9	680	2.1	1520	**BF50G10-../D06LA4**	86	13600	-
0.09	0.85	730	1.9	1684	**BF50G10-../D06LA4**	86	13600	-
0.09	0.7	920	1.5	2059	**BF50G10-../D06LA4**	86	13600	-
0.09	0.6	1120	1.25	2360	**BF50G10-../D06LA4**	86	13600	-

The torques marked (*) are maximum permissible torques for service factor f_B=1.0.

0.09 kW

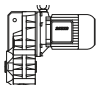

P_N	50 Hz			i	Type	m		
	n_2	M_2	f_B					
[kW]	[1/min]	[Nm]	[—]	[:1]		[kg]	[N]	[N]
0.09	0.7	780	3.2	1955	**BF60G20-../D06LA4**	134	15300	43300
0.09	0.65	860	2.9	2172	**BF60G20-../D06LA4**	134	15300	43300
0.09	0.49	1250	2.0	2781	**BF60G20-../D06LA4**	134	15300	43300
0.09	0.42	1540	1.6	3237	**BF60G20-../D06LA4**	134	15300	43300
0.09	0.35	1950	1.3	3883	**BF60G20-../D06LA4**	134	15300	43300
0.09	0.3	2350	1.05	4646	**BF60G20-../D06LA4**	134	15300	43300
0.09	0.34	2000	2.9	4090	**BF70G20-../D06LA4**	212	16100	47700
0.09	0.3	2350	2.4	4542	**BF70G20-../D06LA4**	212	16100	47700
0.09	0.27	2650	2.2	5124	**BF70G20-../D06LA4**	212	16100	47700
0.09	0.24	3050	1.85	5691	**BF70G20-../D06LA4**	212	16100	47700
0.09	0.21	3600	1.6	6530	**BF70G20-../D06LA4**	212	16100	47700
0.09	0.19	4000	1.45	7248	**BF70G20-../D06LA4**	212	16100	47700
0.09	0.17	4550	1.25	8052	**BF70G20-../D06LA4**	212	16100	47700

0.11 kW

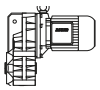

P_N	50 Hz			i	Type	m		
	n_2	M_2	f_B					
[kW]	[1/min]	[Nm]	[—]	[:1]		[kg]	[N]	[N]
0.11	9.0	116	2.1	151.2	**BF10Z-../D04LA4**	21	6400	-
0.11	8.2	128	1.9	166.2	**BF10Z-../D04LA4**	21	6400	-
0.11	7.5	140	1.7	180.1	**BF10Z-../D04LA4**	21	6400	-
0.11	6.9	152	1.6	198.0	**BF10Z-../D04LA4**	21	6400	-
0.11	6.3	166	1.45	214.5	**BF10Z-../D04LA4**	21	6400	-
0.11	5.8	181	1.35	235.8	**BF10Z-../D04LA4**	21	6400	-
0.11	5.3	198	1.2	257.4	**BF10Z-../D04LA4**	21	6400	-
0.11	4.8	215	1.1	283.1	**BF10Z-../D04LA4**	21	6400	-
0.11	4.2	250	0.96	324.3	**BF10Z-../D04LA4**	21	6400	-
0.11	3.8	275	0.87	356.6	**BF10Z-../D04LA4**	21	6400	-
0.11	3.6	290	0.83	380.2	**BF10Z-../D04LA4**	21	6400	-
0.11	3.2	280	0.93	424.5	**BF10G06-../D04LA4**	25	6400	-
0.11	2.6	260*	1.0	536.0	**BF10G06-../D04LA4**	25	6400	-
0.11	2.1	260*	1.0	643.8	**BF10G06-../D04LA4**	25	6400	-
0.11	1.8	260*	1.0	768.2	**BF10G06-../D04LA4**	25	6400	-
0.11	1.6	260*	1.0	845.1	**BF10G06-../D04LA4**	25	6400	-
0.11	1.4	260*	1.0	994.0	**BF10G06-../D04LA4**	25	6400	-
0.11	1.2	260*	1.0	1190	**BF10G06-../D04LA4**	25	6400	-
0.11	0.95	260*	1.0	1452	**BF10G06-../D04LA4**	25	6400	-
0.11	0.8	260*	1.0	1744	**BF10G06-../D04LA4**	25	6400	-
0.11	0.65	260*	1.0	2096	**BF10G06-../D04LA4**	25	6400	-
0.11	0.55	260*	1.0	2467	**BF10G06-../D04LA4**	25	6400	-
0.11	0.46	260*	1.0	2952	**BF10G06-../D04LA4**	25	6400	-
0.11	0.42	260*	1.0	3220	**BF10G06-../D04LA4**	25	6400	-
0.11	0.35	260*	1.0	3942	**BF10G06-../D04LA4**	25	6400	-
0.11	0.3	260*	1.0	4569	**BF10G06-../D04LA4**	25	6400	-
0.11	0.24	260*	1.0	5709	**BF10G06-../D04LA4**	25	6400	-
0.11	0.21	260*	1.0	6550	**BF10G06-../D04LA4**	25	6400	-
0.11	0.19	260*	1.0	7144	**BF10G06-../D04LA4**	25	6400	-
0.11	0.16	260*	1.0	8681	**BF10G06-../D04LA4**	25	6400	-
0.11	0.15	260*	1.0	9471	**BF10G06-../D04LA4**	25	6400	-
0.11	8.3	126	3.3	164.3	**BF20Z-../D04LA4**	28	7900	-
0.11	7.5	140	3.0	180.8	**BF20Z-../D04LA4**	28	7900	-
0.11	6.9	152	2.8	197.1	**BF20Z-../D04LA4**	28	7900	-
0.11	6.3	166	2.5	216.9	**BF20Z-../D04LA4**	28	7900	-
0.11	5.8	181	2.3	235.9	**BF20Z-../D04LA4**	28	7900	-
0.11	5.3	198	2.1	259.6	**BF20Z-../D04LA4**	28	7900	-
0.11	4.6	225	1.85	295.5	**BF20Z-../D04LA4**	28	7900	-
0.11	4.2	250	1.7	325.2	**BF20Z-../D04LA4**	28	7900	-
0.11	4.0	260	1.6	339.1	**BF20Z-../D04LA4**	28	7900	-
0.11	3.7	280	1.5	373.1	**BF20Z-../D04LA4**	28	7900	-
0.11	3.3	315	1.35	418.1	**BF20Z-../D04LA4**	28	7900	-
0.11	3.0	350	1.2	460.0	**BF20Z-../D04LA4**	28	7900	-
0.11	2.7	330	1.4	513.7	**BF20G06-../D04LA4**	31	7900	-
0.11	2.2	415	1.1	617.0	**BF20G06-../D04LA4**	31	7900	-

The torques marked (*) are maximum permissible torques for service factor f_B=1.0.

0.11 kW

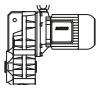

P_N	50 Hz			i	Type	m		
	n_2	M_2	f_B					
[kW]	[1/min]	[Nm]	[—]	[:1]		[kg]	[N]	[N]
0.11	1.9	490	0.94	736.1	**BF20G06-../D04LA4**	31	7900	-
0.11	1.7	550	0.84	810.0	**BF20G06-../D04LA4**	31	7900	-
0.11	1.5	460*	1.0	952.7	**BF20G06-../D04LA4**	31	7900	-
0.11	1.2	460*	1.0	1140	**BF20G06-../D04LA4**	31	7900	-
0.11	1.0	460*	1.0	1392	**BF20G06-../D04LA4**	31	7900	-
0.11	0.9	460*	1.0	1533	**BF20G06-../D04LA4**	31	7900	-
0.11	0.8	460*	1.0	1764	**BF20G06-../D04LA4**	31	7900	-
0.11	0.65	460*	1.0	2192	**BF20G06-../D04LA4**	31	7900	-
0.11	0.55	460*	1.0	2579	**BF20G06-../D04LA4**	31	7900	-
0.11	0.48	460*	1.0	2829	**BF20G06-../D04LA4**	31	7900	-
0.11	0.44	460*	1.0	3086	**BF20G06-../D04LA4**	31	7900	-
0.11	0.36	460*	1.0	3778	**BF20G06-../D04LA4**	31	7900	-
0.11	0.31	460*	1.0	4379	**BF20G06-../D04LA4**	31	7900	-
0.11	0.25	460*	1.0	5471	**BF20G06-../D04LA4**	31	7900	-
0.11	0.2	460*	1.0	6847	**BF20G06-../D04LA4**	31	7900	-
0.11	0.17	460*	1.0	8320	**BF20G06-../D04LA4**	31	7900	-
0.11	0.15	460*	1.0	9077	**BF20G06-../D04LA4**	31	7900	-
0.11	2.2	415	1.5	622.4	**BF30G06-../D04LA4**	41	7400	-
0.11	2.0	465	1.35	705.1	**BF30G06-../D04LA4**	41	7400	-
0.11	1.7	550	1.15	817.1	**BF30G06-../D04LA4**	41	7400	-
0.11	1.5	620	1.0	961.1	**BF30G06-../D04LA4**	41	7400	-
0.11	1.2	790	0.8	1150	**BF30G06-../D04LA4**	41	7400	-
0.11	1.1	630*	1.0	1286	**BF30G06-../D04LA4**	41	7400	-
0.11	1.0	630*	1.0	1404	**BF30G06-../D04LA4**	41	7400	-
0.11	0.85	630*	1.0	1686	**BF30G06-../D04LA4**	41	7400	-
0.11	0.7	630*	1.0	2026	**BF30G06-../D04LA4**	41	7400	-
0.11	0.6	630*	1.0	2386	**BF30G06-../D04LA4**	41	7400	-
0.11	0.48	630*	1.0	2854	**BF30G06-../D04LA4**	41	7400	-
0.11	0.39	630*	1.0	3493	**BF30G06-../D04LA4**	41	7400	-
0.11	0.36	630*	1.0	3811	**BF30G06-../D04LA4**	41	7400	-
0.11	0.31	630*	1.0	4417	**BF30G06-../D04LA4**	41	7400	-
0.11	0.27	630*	1.0	5060	**BF30G06-../D04LA4**	41	7400	-
0.11	0.22	630*	1.0	6333	**BF30G06-../D04LA4**	41	7400	-
0.11	0.19	630*	1.0	7206	**BF30G06-../D04LA4**	41	7400	-
0.11	0.18	630*	1.0	7861	**BF30G06-../D04LA4**	41	7400	-
0.11	0.15	630*	1.0	9157	**BF30G06-../D04LA4**	41	7400	-

0.12 kW

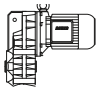

P_N	50 Hz			i	Type	m		
	n_2	M_2	f_B					
[kW]	[1/min]	[Nm]	[—]	[:1]		[kg]	[N]	[N]
0.12	9.0	127	1.9	151.2	**BF10Z-../DSE04LA4**	21	6400	-
0.12	8.2	139	1.75	166.2	**BF10Z-../DSE04LA4**	21	6400	-
0.12	7.5	152	1.6	180.1	**BF10Z-../DSE04LA4**	21	6400	-
0.12	6.9	166	1.45	198.0	**BF10Z-../DSE04LA4**	21	6400	-
0.12	6.3	181	1.35	214.5	**BF10Z-../DSE04LA4**	21	6400	-
0.12	5.8	197	1.2	235.8	**BF10Z-../DSE04LA4**	21	6400	-
0.12	5.3	215	1.1	257.4	**BF10Z-../DSE04LA4**	21	6400	-
0.12	4.8	235	1.0	283.1	**BF10Z-../DSE04LA4**	21	6400	-
0.12	4.2	270	0.89	324.3	**BF10Z-../DSE04LA4**	21	6400	-
0.12	3.8	300	0.8	356.6	**BF10Z-../DSE04LA4**	21	6400	-
0.12	3.6	275	0.95	377.9	**BF10G06-../DSE04LA4**	25	6400	-
0.12	3.2	310	0.84	424.5	**BF10G06-../DSE04LA4**	25	6400	-
0.12	2.6	260*	1.0	536.0	**BF10G06-../DSE04LA4**	25	6400	-
0.12	2.1	260*	1.0	643.8	**BF10G06-../DSE04LA4**	25	6400	-
0.12	1.8	260*	1.0	768.2	**BF10G06-../DSE04LA4**	25	6400	-
0.12	1.6	260*	1.0	845.1	**BF10G06-../DSE04LA4**	25	6400	-
0.12	1.4	260*	1.0	994.0	**BF10G06-../DSE04LA4**	25	6400	-
0.12	1.2	260*	1.0	1190	**BF10G06-../DSE04LA4**	25	6400	-
0.12	0.95	260*	1.0	1452	**BF10G06-../DSE04LA4**	25	6400	-
0.12	0.8	260*	1.0	1744	**BF10G06-../DSE04LA4**	25	6400	-
0.12	0.65	260*	1.0	2096	**BF10G06-../DSE04LA4**	25	6400	-
0.12	0.55	260*	1.0	2467	**BF10G06-../DSE04LA4**	25	6400	-
0.12	0.46	260*	1.0	2952	**BF10G06-../DSE04LA4**	25	6400	-

The torques marked (*) are maximum permissible torques for service factor f_B=1.0.

0.12 kW

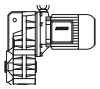

P_N	50 Hz			i	Type	m		
	n_2	M_2	f_B					
[kW]	[1/min]	[Nm]	[—]	[:1]		[kg]	[N]	[N]
0.12	0.42	260*	1.0	3220	**BF10G06-../DSE04LA4**	25	6400	-
0.12	0.35	260*	1.0	3942	**BF10G06-../DSE04LA4**	25	6400	-
0.12	0.3	260*	1.0	4569	**BF10G06-../DSE04LA4**	25	6400	-
0.12	0.24	260*	1.0	5709	**BF10G06-../DSE04LA4**	25	6400	-
0.12	0.21	260*	1.0	6550	**BF10G06-../DSE04LA4**	25	6400	-
0.12	0.19	260*	1.0	7144	**BF10G06-../DSE04LA4**	25	6400	-
0.12	0.16	260*	1.0	8681	**BF10G06-../DSE04LA4**	25	6400	-
0.12	0.15	260*	1.0	9471	**BF10G06-../DSE04LA4**	25	6400	-
0.12	8.7	131	3.2	155.4	**BF20Z-../DSE04LA4**	28	7900	-
0.12	8.3	138	3.0	164.3	**BF20Z-../DSE04LA4**	28	7900	-
0.12	7.5	152	2.8	180.8	**BF20Z-../DSE04LA4**	28	7900	-
0.12	6.9	166	2.5	197.1	**BF20Z-../DSE04LA4**	28	7900	-
0.12	6.3	181	2.3	216.9	**BF20Z-../DSE04LA4**	28	7900	-
0.12	5.8	197	2.1	235.9	**BF20Z-../DSE04LA4**	28	7900	-
0.12	5.3	215	1.95	259.6	**BF20Z-../DSE04LA4**	28	7900	-
0.12	4.6	245	1.7	295.5	**BF20Z-../DSE04LA4**	28	7900	-
0.12	4.2	270	1.55	325.2	**BF20Z-../DSE04LA4**	28	7900	-
0.12	4.0	285	1.45	339.1	**BF20Z-../DSE04LA4**	28	7900	-
0.12	3.7	305	1.4	373.1	**BF20Z-../DSE04LA4**	28	7900	-
0.12	3.3	345	1.2	418.1	**BF20Z-../DSE04LA4**	28	7900	-
0.12	3.0	380	1.1	460.0	**BF20Z-../DSE04LA4**	28	7900	-
0.12	2.7	370	1.25	513.7	**BF20G06-../DSE04LA4**	31	7900	-
0.12	2.2	460	1.0	617.0	**BF20G06-../DSE04LA4**	31	7900	-
0.12	1.9	540	0.85	736.1	**BF20G06-../DSE04LA4**	31	7900	-
0.12	1.7	460*	1.0	810.0	**BF20G06-../DSE04LA4**	31	7900	-
0.12	1.5	460*	1.0	952.7	**BF20G06-../DSE04LA4**	31	7900	-
0.12	1.2	460*	1.0	1140	**BF20G06-../DSE04LA4**	31	7900	-
0.12	1.0	460*	1.0	1392	**BF20G06-../DSE04LA4**	31	7900	-
0.12	0.9	460*	1.0	1533	**BF20G06-../DSE04LA4**	31	7900	-
0.12	0.8	460*	1.0	1764	**BF20G06-../DSE04LA4**	31	7900	-
0.12	0.65	460*	1.0	2192	**BF20G06-../DSE04LA4**	31	7900	-
0.12	0.55	460*	1.0	2579	**BF20G06-../DSE04LA4**	31	7900	-
0.12	0.48	460*	1.0	2829	**BF20G06-../DSE04LA4**	31	7900	-
0.12	0.44	460*	1.0	3086	**BF20G06-../DSE04LA4**	31	7900	-
0.12	0.36	460*	1.0	3778	**BF20G06-../DSE04LA4**	31	7900	-
0.12	0.31	460*	1.0	4379	**BF20G06-../DSE04LA4**	31	7900	-
0.12	0.25	460*	1.0	5471	**BF20G06-../DSE04LA4**	31	7900	-
0.12	0.2	460*	1.0	6847	**BF20G06-../DSE04LA4**	31	7900	-
0.12	0.17	460*	1.0	8320	**BF20G06-../DSE04LA4**	31	7900	-
0.12	0.15	460*	1.0	9077	**BF20G06-../DSE04LA4**	31	7900	-
0.12	2.2	460	1.35	622.4	**BF30G06-../DSE04LA4**	41	7400	-
0.12	2.0	510	1.25	705.1	**BF30G06-../DSE04LA4**	41	7400	-
0.12	1.7	600	1.05	817.1	**BF30G06-../DSE04LA4**	41	7400	-
0.12	1.5	690	0.91	961.1	**BF30G06-../DSE04LA4**	41	7400	-
0.12	1.2	630*	1.0	1150	**BF30G06-../DSE04LA4**	41	7400	-
0.12	1.1	630*	1.0	1286	**BF30G06-../DSE04LA4**	41	7400	-
0.12	1.0	630*	1.0	1404	**BF30G06-../DSE04LA4**	41	7400	-
0.12	0.85	630*	1.0	1686	**BF30G06-../DSE04LA4**	41	7400	-
0.12	0.7	630*	1.0	2026	**BF30G06-../DSE04LA4**	41	7400	-
0.12	0.6	630*	1.0	2386	**BF30G06-../DSE04LA4**	41	7400	-
0.12	0.48	630*	1.0	2854	**BF30G06-../DSE04LA4**	41	7400	-
0.12	0.39	630*	1.0	3493	**BF30G06-../DSE04LA4**	41	7400	-
0.12	0.36	630*	1.0	3811	**BF30G06-../DSE04LA4**	41	7400	-
0.12	0.31	630*	1.0	4417	**BF30G06-../DSE04LA4**	41	7400	-
0.12	0.27	630*	1.0	5060	**BF30G06-../DSE04LA4**	41	7400	-
0.12	0.22	630*	1.0	6333	**BF30G06-../DSE04LA4**	41	7400	-
0.12	0.19	630*	1.0	7206	**BF30G06-../DSE04LA4**	41	7400	-
0.12	0.18	630*	1.0	7861	**BF30G06-../DSE04LA4**	41	7400	-
0.12	0.15	630*	1.0	9157	**BF30G06-../DSE04LA4**	41	7400	-

The torques marked (*) are maximum permissible torques for service factor f_B=1.0.

0.18 kW

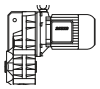

P_N	50 Hz			i	Type	m		
	n_2	M_2	f_B					
[kW]	[1/min]	[Nm]	[—]	[:1]		[kg]	[N]	[N]
0.18	177	9.7	7.0	7.66	**BF06-../DSE05LA4**	10	1800	-
0.18	147	11.6	6.0	9.21	**BF06-../DSE05LA4**	10	1900	-
0.18	112	15.3	4.9	12.07	**BF06-../DSE05LA4**	10	2000	-
0.18	96	17.9	4.7	14.21	**BF06-../DSE05LA4**	10	2100	-
0.18	80	21	4.5	16.99	**BF06-../DSE05LA4**	10	2500	-
0.18	67	25.5	3.7	20.42	**BF06-../DSE05LA4**	10	2700	-
0.18	51	33.5	2.8	26.76	**BF06-../DSE05LA4**	10	3000	-
0.18	43	39.5	2.4	31.50	**BF06-../DSE05LA4**	10	3200	-
0.18	36	47.5	2.0	37.69	**BF06-../DSE05LA4**	10	3500	-
0.18	29.5	58	1.65	46.14	**BF06-../DSE05LA4**	10	3800	-
0.18	23.5	73	1.3	58.33	**BF06-../DSE05LA4**	10	4000	-
0.18	20.5	83	1.15	66.82	**BF06-../DSE05LA4**	10	4000	-
0.18	16.5	104	0.91	83.61	**BF06-../DSE05LA4**	10	4000	-
0.18	14.5	118	0.81	95.16	**BF06-../DSE05LA4**	10	4000	-
0.18	22	78	3.1	61.55	**BF10-../DSE06LA4**	23	4700	-
0.18	20	85	2.8	67.69	**BF10-../DSE06LA4**	23	4900	-
0.18	17.5	98	2.4	77.55	**BF10-../DSE06LA4**	23	5100	-
0.18	16	107	2.2	85.27	**BF10-../DSE06LA4**	23	5300	-
0.18	15	114	2.1	90.91	**BF10-../DSE06LA4**	23	5400	-
0.18	14	122	1.95	99.97	**BF10-../DSE06LA4**	23	5600	-
0.18	12.5	137	1.75	112.3	**BF10-../DSE06LA4**	23	5900	-
0.18	11	156	1.55	123.5	**BF10-../DSE06LA4**	23	6100	-
0.18	10.5	163	1.45	128.9	**BF10-../DSE06LA4**	23	6200	-
0.18	9.6	179	1.35	141.8	**BF10-../DSE06LA4**	23	6400	-
0.18	9.0	191	1.25	151.2	**BF10Z-../DSE06LA4**	24	6400	-
0.18	8.2	205	1.15	166.2	**BF10Z-../DSE06LA4**	24	6400	-
0.18	7.5	225	1.05	180.1	**BF10Z-../DSE06LA4**	24	6400	-
0.18	6.9	245	0.98	198.0	**BF10Z-../DSE06LA4**	24	6400	-
0.18	6.3	270	0.89	214.5	**BF10Z-../DSE06LA4**	24	6400	-
0.18	5.8	295	0.81	235.8	**BF10Z-../DSE06LA4**	24	6400	-
0.18	13.5	127	3.3	100.2	**BF20-../DSE06LA4**	30	7000	-
0.18	12.5	137	3.1	110.2	**BF20-../DSE06LA4**	30	7300	-
0.18	11	156	2.7	123.5	**BF20-../DSE06LA4**	30	7600	-
0.18	10	171	2.5	135.9	**BF20-../DSE06LA4**	30	7900	-
0.18	9.6	179	2.3	141.2	**BF20Z-../DSE06LA4**	31	7900	-
0.18	8.7	197	2.1	155.4	**BF20Z-../DSE06LA4**	31	7900	-
0.18	8.3	205	2.0	164.3	**BF20Z-../DSE06LA4**	31	7900	-
0.18	7.5	225	1.85	180.8	**BF20Z-../DSE06LA4**	31	7900	-
0.18	6.9	245	1.7	197.1	**BF20Z-../DSE06LA4**	31	7900	-
0.18	6.3	270	1.55	216.9	**BF20Z-../DSE06LA4**	31	7900	-
0.18	5.8	295	1.4	235.9	**BF20Z-../DSE06LA4**	31	7900	-
0.18	5.3	320	1.3	259.6	**BF20Z-../DSE06LA4**	31	7900	-
0.18	4.6	370	1.15	295.5	**BF20Z-../DSE06LA4**	31	7900	-
0.18	4.2	405	1.05	325.2	**BF20Z-../DSE06LA4**	31	7900	-
0.18	4.0	425	0.99	339.1	**BF20Z-../DSE06LA4**	31	7900	-
0.18	3.7	460	0.91	373.1	**BF20Z-../DSE06LA4**	31	7900	-
0.18	3.3	520	0.81	418.1	**BF20Z-../DSE06LA4**	31	7900	-
0.18	9.9	173	3.3	137.1	**BF30-../DSE06LA4**	40	7400	-
0.18	9.0	191	3.0	150.7	**BF30Z-../DSE06LA4**	42	7400	-
0.18	8.2	205	2.8	165.8	**BF30Z-../DSE06LA4**	42	7400	-
0.18	7.7	220	2.6	176.6	**BF30Z-../DSE06LA4**	42	7400	-
0.18	7.0	245	2.3	194.3	**BF30Z-../DSE06LA4**	42	7400	-
0.18	6.1	280	2.1	224.8	**BF30Z-../DSE06LA4**	42	7400	-
0.18	5.5	310	1.85	247.3	**BF30Z-../DSE06LA4**	42	7400	-
0.18	5.2	330	1.75	263.5	**BF30Z-../DSE06LA4**	42	7400	-
0.18	4.7	365	1.6	289.8	**BF30Z-../DSE06LA4**	42	7400	-
0.18	4.4	390	1.45	310.7	**BF30Z-../DSE06LA4**	42	7400	-
0.18	4.0	425	1.35	341.8	**BF30Z-../DSE06LA4**	42	7400	-
0.18	3.6	475	1.2	375.1	**BF30Z-../DSE06LA4**	42	7400	-
0.18	3.3	520	1.1	412.6	**BF30Z-../DSE06LA4**	42	7400	-
0.18	3.0	570	1.0	463.3	**BF30Z-../DSE06LA4**	42	7400	-
0.18	2.6	660	0.87	537.0	**BF30Z-../DSE06LA4**	42	7400	-
0.18	2.2	720	0.88	622.4	**BF30G06-../DSE06LA4**	45	7400	-
0.18	6.1	280	3.2	222.4	**BF40Z-../DSE06LA4**	53	10600	-
0.18	5.4	315	2.9	253.2	**BF40Z-../DSE06LA4**	53	10600	-
0.18	4.9	350	2.6	278.5	**BF40Z-../DSE06LA4**	53	10600	-

The torques marked (*) are maximum permissible torques for service factor f_B=1.0.

0.18 kW

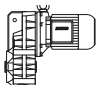

P_N	50 Hz			i	Type	m		
	n_2	M_2	f_B					
[kW]	[1/min]	[Nm]	[—]	[:1]		[kg]	[N]	[N]
0.18	4.6	370	2.4	295.1	**BF40Z-../DSE06LA4**	53	10600	-
0.18	4.2	405	2.2	324.7	**BF40Z-../DSE06LA4**	53	10600	-
0.18	3.9	440	2.0	346.8	**BF40Z-../DSE06LA4**	53	10600	-
0.18	3.6	475	1.9	381.5	**BF40Z-../DSE06LA4**	53	10600	-
0.18	3.3	520	1.75	417.3	**BF40Z-../DSE06LA4**	53	10600	-
0.18	3.0	570	1.6	459.1	**BF40Z-../DSE06LA4**	53	10600	-
0.18	2.7	630	1.45	514.6	**BF40Z-../DSE06LA4**	53	10600	-
0.18	2.4	710	1.25	566.1	**BF40Z-../DSE06LA4**	53	10600	-
0.18	2.3	560	1.8	597.3	**BF40G10-../DSE06LA4**	58	10600	-
0.18	1.9	690	1.45	731.6	**BF40G10-../DSE06LA4**	58	10600	-
0.18	1.5	920	1.1	928.9	**BF40G10-../DSE06LA4**	58	10600	-
0.18	1.3	1080	0.93	1106	**BF40G10-../DSE06LA4**	58	10600	-
0.18	4.3	395	3.3	316.6	**BF50Z-../DSE06LA4**	82	13600	-
0.18	3.9	440	3.0	354.0	**BF50Z-../DSE06LA4**	82	13600	-
0.18	3.5	490	2.7	392.8	**BF50Z-../DSE06LA4**	82	13600	-
0.18	3.1	550	2.4	439.3	**BF50Z-../DSE06LA4**	82	13600	-
0.18	2.8	610	2.1	496.4	**BF50Z-../DSE06LA4**	82	13600	-
0.18	2.5	680	1.9	555.2	**BF50Z-../DSE06LA4**	82	13600	-
0.18	2.0	660	2.1	680.9	**BF50G10-../DSE06LA4**	86	13600	-
0.18	1.6	860	1.65	864.5	**BF50G10-../DSE06LA4**	86	13600	-
0.18	1.4	1000	1.4	1029	**BF50G10-../DSE06LA4**	86	13600	-
0.18	1.2	1220	1.15	1203	**BF50G10-../DSE06LA4**	86	13600	-
0.18	1.0	1470	0.95	1359	**BF50G10-../DSE06LA4**	86	13600	-
0.18	1.5	870	2.9	937.6	**BF60G20-../DSE06LA4**	134	15300	43300
0.18	1.2	1120	2.2	1211	**BF60G20-../DSE06LA4**	134	15300	43300
0.18	0.95	1430	1.75	1494	**BF60G20-../DSE06LA4**	134	15300	43300
0.18	0.85	1600	1.55	1658	**BF60G20-../DSE06LA4**	134	15300	43300
0.18	0.7	2000	1.25	1955	**BF60G20-../DSE06LA4**	134	15300	43300
0.18	0.65	2150	1.15	2172	**BF60G20-../DSE06LA4**	134	15300	43300
0.18	0.75	1850	3.1	1912	**BF70G20-../DSE06LA4**	212	16100	47700
0.18	0.6	2350	2.4	2448	**BF70G20-../DSE06LA4**	212	16100	47700
0.18	0.48	3050	1.85	2849	**BF70G20-../DSE06LA4**	212	16100	47700
0.18	0.4	3800	1.5	3417	**BF70G20-../DSE06LA4**	212	16100	47700
0.18	0.34	4550	1.25	4090	**BF70G20-../DSE06LA4**	212	16100	47700
0.18	0.3	5200	1.1	4542	**BF70G20-../DSE06LA4**	212	16100	47700

0.25 kW

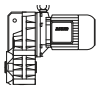

P_N	50 Hz			i	Type	m		
	n_2	M_2	f_B					
[kW]	[1/min]	[Nm]	[—]	[:1]		[kg]	[N]	[N]
0.25	177	13.4	5.1	7.66	**BF06-../DSE05LA4**	10	1800	-
0.25	147	16.2	4.3	9.21	**BF06-../DSE05LA4**	10	1900	-
0.25	112	21	3.6	12.07	**BF06-../DSE05LA4**	10	2000	-
0.25	96	24.5	3.5	14.21	**BF06-../DSE05LA4**	10	2100	-
0.25	80	29.5	3.2	16.99	**BF06-../DSE05LA4**	10	2500	-
0.25	67	35.5	2.7	20.42	**BF06-../DSE05LA4**	10	2700	-
0.25	51	46.5	2.0	26.76	**BF06-../DSE05LA4**	10	3000	-
0.25	43	55	1.75	31.50	**BF06-../DSE05LA4**	10	3200	-
0.25	36	66	1.45	37.69	**BF06-../DSE05LA4**	10	3500	-
0.25	29.5	80	1.2	46.14	**BF06-../DSE05LA4**	10	3800	-
0.25	23.5	101	0.94	58.33	**BF06-../DSE05LA4**	10	4000	-
0.25	20.5	116	0.82	66.82	**BF06-../DSE05LA4**	10	4000	-
0.25	31.5	75	3.2	43.06	**BF10-../DSE06LA4**	23	4100	-
0.25	29	82	2.9	47.35	**BF10-../DSE06LA4**	23	4250	-
0.25	26.5	90	2.7	51.28	**BF10-../DSE06LA4**	23	4400	-
0.25	24	99	2.4	56.39	**BF10-../DSE06LA4**	23	4550	-
0.25	22	108	2.2	61.55	**BF10-../DSE06LA4**	23	4700	-
0.25	20	119	2.0	67.69	**BF10-../DSE06LA4**	23	4900	-
0.25	17.5	136	1.75	77.55	**BF10-../DSE06LA4**	23	5100	-
0.25	16	149	1.6	85.27	**BF10-../DSE06LA4**	23	5300	-
0.25	15	159	1.5	90.91	**BF10-../DSE06LA4**	23	5400	-

The torques marked (*) are maximum permissible torques for service factor f_B=1.0.

0.25 kW

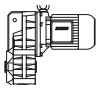

P_N	50 Hz			i	Type	m		
	n_2	M_2	f_B					
[kW]	[1/min]	[Nm]	[—]	[:1]		[kg]	[N]	[N]
0.25	14	170	1.4	99.97	**BF10-../DSE06LA4**	23	5600	-
0.25	12.5	191	1.25	112.3	**BF10-../DSE06LA4**	23	5900	-
0.25	11	215	1.1	123.5	**BF10-../DSE06LA4**	23	6100	-
0.25	10.5	225	1.05	128.9	**BF10-../DSE06LA4**	23	6200	-
0.25	9.6	245	0.98	141.8	**BF10-../DSE06LA4**	23	6400	-
0.25	9.0	265	0.91	151.2	**BF10Z-../DSE06LA4**	24	6400	-
0.25	8.2	290	0.83	166.2	**BF10Z-../DSE06LA4**	24	6400	-
0.25	18	132	3.2	76.69	**BF20-../DSE06LA4**	30	6300	-
0.25	15.5	154	2.7	87.31	**BF20-../DSE06LA4**	30	6600	-
0.25	14.5	164	2.6	96.08	**BF20-../DSE06LA4**	30	6900	-
0.25	13.5	176	2.4	100.2	**BF20-../DSE06LA4**	30	7000	-
0.25	12.5	191	2.2	110.2	**BF20-../DSE06LA4**	30	7300	-
0.25	11	215	1.95	123.5	**BF20-../DSE06LA4**	30	7600	-
0.25	10	235	1.8	135.9	**BF20-../DSE06LA4**	30	7900	-
0.25	9.6	245	1.7	141.2	**BF20Z-../DSE06LA4**	31	7900	-
0.25	8.7	270	1.55	155.4	**BF20Z-../DSE06LA4**	31	7900	-
0.25	8.3	285	1.45	164.3	**BF20Z-../DSE06LA4**	31	7900	-
0.25	7.5	315	1.35	180.8	**BF20Z-../DSE06LA4**	31	7900	-
0.25	6.9	345	1.2	197.1	**BF20Z-../DSE06LA4**	31	7900	-
0.25	6.3	375	1.1	216.9	**BF20Z-../DSE06LA4**	31	7900	-
0.25	5.8	410	1.0	235.9	**BF20Z-../DSE06LA4**	31	7900	-
0.25	5.3	450	0.93	259.6	**BF20Z-../DSE06LA4**	31	7900	-
0.25	4.6	510	0.82	295.5	**BF20Z-../DSE06LA4**	31	7900	-
0.25	13	183	3.1	107.6	**BF30-../DSE06LA4**	40	6700	-
0.25	11.5	205	2.8	118.3	**BF30-../DSE06LA4**	40	7000	-
0.25	11	215	2.7	124.7	**BF30-../DSE06LA4**	40	7100	-
0.25	9.9	240	2.4	137.1	**BF30-../DSE06LA4**	40	7400	-
0.25	9.0	265	2.2	150.7	**BF30Z-../DSE06LA4**	42	7400	-
0.25	8.2	290	2.0	165.8	**BF30Z-../DSE06LA4**	42	7400	-
0.25	7.7	310	1.85	176.6	**BF30Z-../DSE06LA4**	42	7400	-
0.25	7.0	340	1.7	194.3	**BF30Z-../DSE06LA4**	42	7400	-
0.25	6.1	390	1.45	224.8	**BF30Z-../DSE06LA4**	42	7400	-
0.25	5.5	430	1.35	247.3	**BF30Z-../DSE06LA4**	42	7400	-
0.25	5.2	455	1.25	263.5	**BF30Z-../DSE06LA4**	42	7400	-
0.25	4.7	500	1.15	289.8	**BF30Z-../DSE06LA4**	42	7400	-
0.25	4.4	540	1.05	310.7	**BF30Z-../DSE06LA4**	42	7400	-
0.25	4.0	590	0.97	341.8	**BF30Z-../DSE06LA4**	42	7400	-
0.25	3.6	660	0.87	375.1	**BF30Z-../DSE06LA4**	42	7400	-
0.25	3.3	720	0.8	412.6	**BF30Z-../DSE06LA4**	42	7400	-
0.25	8.7	270	3.3	155.6	**BF40Z-../DSE06LA4**	53	10600	-
0.25	7.9	300	3.0	171.2	**BF40Z-../DSE06LA4**	53	10600	-
0.25	7.2	330	2.7	188.3	**BF40Z-../DSE06LA4**	53	10600	-
0.25	6.7	355	2.5	202.2	**BF40Z-../DSE06LA4**	53	10600	-
0.25	6.1	390	2.3	222.4	**BF40Z-../DSE06LA4**	53	10600	-
0.25	5.4	440	2.0	253.2	**BF40Z-../DSE06LA4**	53	10600	-
0.25	4.9	485	1.85	278.5	**BF40Z-../DSE06LA4**	53	10600	-
0.25	4.6	510	1.75	295.1	**BF40Z-../DSE06LA4**	53	10600	-
0.25	4.2	560	1.6	324.7	**BF40Z-../DSE06LA4**	53	10600	-
0.25	3.9	610	1.5	346.8	**BF40Z-../DSE06LA4**	53	10600	-
0.25	3.6	660	1.35	381.5	**BF40Z-../DSE06LA4**	53	10600	-
0.25	3.3	720	1.25	417.3	**BF40Z-../DSE06LA4**	53	10600	-
0.25	3.0	790	1.15	459.1	**BF40Z-../DSE06LA4**	53	10600	-
0.25	2.7	880	1.0	514.6	**BF40Z-../DSE06LA4**	53	10600	-
0.25	2.4	990	0.91	566.1	**BF40Z-../DSE06LA4**	53	10600	-
0.25	2.3	850	1.2	597.3	**BF40G10-../DSE06LA4**	58	10600	-
0.25	1.9	1050	0.95	731.6	**BF40G10-../DSE06LA4**	58	10600	-
0.25	5.5	430	3.0	247.5	**BF50Z-../DSE06LA4**	82	13600	-
0.25	4.9	485	2.7	276.8	**BF50Z-../DSE06LA4**	82	13600	-
0.25	4.3	550	2.4	316.6	**BF50Z-../DSE06LA4**	82	13600	-
0.25	3.9	610	2.1	354.0	**BF50Z-../DSE06LA4**	82	13600	-
0.25	3.5	680	1.9	392.8	**BF50Z-../DSE06LA4**	82	13600	-
0.25	3.1	770	1.7	439.3	**BF50Z-../DSE06LA4**	82	13600	-
0.25	2.8	850	1.55	496.4	**BF50Z-../DSE06LA4**	82	13600	-
0.25	2.5	950	1.35	555.2	**BF50Z-../DSE06LA4**	82	13600	-
0.25	2.0	1000	1.4	680.9	**BF50G10-../DSE06LA4**	86	13600	-

The torques marked (*) are maximum permissible torques for service factor f_B=1.0.

0.25 kW

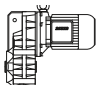

P_N	50 Hz			i	Type	m		
	n_2	M_2	f_B					
[kW]	[1/min]	[Nm]	[—]	[:1]		[kg]	[N]	[N]
0.25	1.6	1280	1.1	864.5	**BF50G10-../DSE06LA4**	86	13600	-
0.25	1.4	1480	0.95	1029	**BF50G10-../DSE06LA4**	86	13600	-
0.25	2.4	750	3.3	569.3	**BF60G20-../DSE06LA4**	134	15300	43300
0.25	2.0	900	2.8	689.0	**BF60G20-../DSE06LA4**	134	15300	43300
0.25	1.7	1090	2.3	813.2	**BF60G20-../DSE06LA4**	134	15300	43300
0.25	1.5	1310	1.9	937.6	**BF60G20-../DSE06LA4**	134	15300	43300
0.25	1.2	1680	1.5	1211	**BF60G20-../DSE06LA4**	134	15300	43300
0.25	0.95	2100	1.2	1494	**BF60G20-../DSE06LA4**	134	15300	43300
0.25	0.85	2350	1.05	1658	**BF60G20-../DSE06LA4**	134	15300	43300
0.25	1.0	2000	2.9	1390	**BF70G20-../DSE06LA4**	212	16100	47700
0.25	0.85	2350	2.4	1621	**BF70G20-../DSE06LA4**	212	16100	47700
0.25	0.75	2700	2.1	1912	**BF70G20-../DSE06LA4**	212	16100	47700
0.25	0.6	3500	1.65	2448	**BF70G20-../DSE06LA4**	212	16100	47700
0.25	0.48	4450	1.3	2849	**BF70G20-../DSE06LA4**	212	16100	47700
0.25	0.4	5400	1.05	3417	**BF70G20-../DSE06LA4**	212	16100	47700

0.37 kW

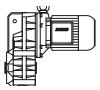

P_N	50 Hz			i	Type	m		
	n_2	M_2	f_B					
[kW]	[1/min]	[Nm]	[—]	[:1]		[kg]	[N]	[N]
0.37	177	19.9	3.4	7.66	**BF06-../DSE07LA4**	14	1800	-
0.37	147	24	2.9	9.21	**BF06-../DSE07LA4**	14	1900	-
0.37	112	31.5	2.4	12.07	**BF06-../DSE07LA4**	14	2000	-
0.37	96	36.5	2.3	14.21	**BF06-../DSE07LA4**	14	2100	-
0.37	80	44	2.2	16.99	**BF06-../DSE07LA4**	14	2500	-
0.37	67	52	1.85	20.42	**BF06-../DSE07LA4**	14	2700	-
0.37	51	69	1.4	26.76	**BF06-../DSE07LA4**	14	3000	-
0.37	43	82	1.15	31.50	**BF06-../DSE07LA4**	14	3200	-
0.37	36	98	0.97	37.69	**BF06-../DSE07LA4**	14	3500	-
0.37	29.5	119	0.8	46.14	**BF06-../DSE07LA4**	14	3800	-
0.37	47.5	74	3.2	28.47	**BF10-../DSE07LA4**	26	3450	-
0.37	43.5	81	3.0	31.31	**BF10-../DSE07LA4**	26	3600	-
0.37	37.5	94	2.6	36.15	**BF10-../DSE07LA4**	26	3800	-
0.37	34	103	2.3	39.75	**BF10-../DSE07LA4**	26	3950	-
0.37	31.5	112	2.1	43.06	**BF10-../DSE07LA4**	26	4100	-
0.37	29	121	2.0	47.35	**BF10-../DSE07LA4**	26	4250	-
0.37	26.5	133	1.8	51.28	**BF10-../DSE07LA4**	26	4400	-
0.37	24	147	1.65	56.39	**BF10-../DSE07LA4**	26	4550	-
0.37	22	160	1.5	61.55	**BF10-../DSE07LA4**	26	4700	-
0.37	20	176	1.35	67.69	**BF10-../DSE07LA4**	26	4900	-
0.37	17.5	200	1.2	77.55	**BF10-../DSE07LA4**	26	5100	-
0.37	16	220	1.1	85.27	**BF10-../DSE07LA4**	26	5300	-
0.37	15	235	1.0	90.91	**BF10-../DSE07LA4**	26	5400	-
0.37	14	250	0.96	99.97	**BF10-../DSE07LA4**	26	5600	-
0.37	12.5	280	0.86	112.3	**BF10-../DSE07LA4**	26	5900	-
0.37	28	126	3.3	48.56	**BF20-../DSE07LA4**	32	5200	-
0.37	25.5	138	3.0	53.43	**BF20-../DSE07LA4**	32	5500	-
0.37	23.5	150	2.8	58.24	**BF20-../DSE07LA4**	32	5600	-
0.37	21.5	164	2.6	64.08	**BF20-../DSE07LA4**	32	5900	-
0.37	19.5	181	2.3	69.70	**BF20-../DSE07LA4**	32	6100	-
0.37	18	196	2.1	76.69	**BF20-../DSE07LA4**	32	6300	-
0.37	15.5	225	1.85	87.31	**BF20-../DSE07LA4**	32	6600	-
0.37	14.5	240	1.75	96.08	**BF20-../DSE07LA4**	32	6900	-
0.37	13.5	260	1.6	100.2	**BF20-../DSE07LA4**	32	7000	-
0.37	12.5	280	1.5	110.2	**BF20-../DSE07LA4**	32	7300	-
0.37	11	320	1.3	123.5	**BF20-../DSE07LA4**	32	7600	-
0.37	10	350	1.2	135.9	**BF20-../DSE07LA4**	32	7900	-
0.37	9.6	365	1.15	141.2	**BF20Z-../DSE07LA4**	34	7900	-
0.37	8.7	405	1.05	155.4	**BF20Z-../DSE07LA4**	34	7900	-
0.37	8.3	425	0.99	164.3	**BF20Z-../DSE07LA4**	34	7900	-
0.37	7.5	470	0.89	180.8	**BF20Z-../DSE07LA4**	34	7900	-

The torques marked (*) are maximum permissible torques for service factor f_B=1.0.

0.37 kW

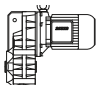

P_N	50 Hz			i	Type	m		
	n_2	M_2	f_B					
[kW]	[1/min]	[Nm]	[—]	[:1]		[kg]	[N]	[N]
0.37	6.9	510	0.82	197.1	**BF20Z-../DSE07LA4**	34	7900	-
0.37	20.5	172	3.3	67.28	**BF30-../DSE07LA4**	42	5500	-
0.37	19	185	3.1	72.13	**BF30-../DSE07LA4**	42	5700	-
0.37	17.5	200	2.9	79.34	**BF30-../DSE07LA4**	42	5900	-
0.37	16	220	2.6	87.08	**BF30-../DSE07LA4**	42	6200	-
0.37	14.5	240	2.4	95.79	**BF30-../DSE07LA4**	42	6400	-
0.37	13	270	2.1	107.6	**BF30-../DSE07LA4**	42	6700	-
0.37	11.5	305	1.9	118.3	**BF30-../DSE07LA4**	42	7000	-
0.37	11	320	1.8	124.7	**BF30-../DSE07LA4**	42	7100	-
0.37	9.9	355	1.6	137.1	**BF30-../DSE07LA4**	42	7400	-
0.37	9.0	390	1.45	150.7	**BF30Z-../DSE07LA4**	45	7400	-
0.37	8.2	430	1.35	165.8	**BF30Z-../DSE07LA4**	45	7400	-
0.37	7.7	455	1.25	176.6	**BF30Z-../DSE07LA4**	45	7400	-
0.37	7.0	500	1.15	194.3	**BF30Z-../DSE07LA4**	45	7400	-
0.37	6.1	570	1.0	224.8	**BF30Z-../DSE07LA4**	45	7400	-
0.37	5.5	640	0.9	247.3	**BF30Z-../DSE07LA4**	45	7400	-
0.37	5.2	670	0.86	263.5	**BF30Z-../DSE07LA4**	45	7400	-
0.37	9.6	365	2.5	141.4	**BF40Z-../DSE07LA4**	55	10600	-
0.37	8.7	405	2.2	155.6	**BF40Z-../DSE07LA4**	55	10600	-
0.37	7.9	445	2.0	171.2	**BF40Z-../DSE07LA4**	55	10600	-
0.37	7.2	490	1.85	188.3	**BF40Z-../DSE07LA4**	55	10600	-
0.37	6.7	520	1.75	202.2	**BF40Z-../DSE07LA4**	55	10600	-
0.37	6.1	570	1.6	222.4	**BF40Z-../DSE07LA4**	55	10600	-
0.37	5.4	650	1.4	253.2	**BF40Z-../DSE07LA4**	55	10600	-
0.37	4.9	720	1.25	278.5	**BF40Z-../DSE07LA4**	55	10600	-
0.37	4.6	760	1.2	295.1	**BF40Z-../DSE07LA4**	55	10600	-
0.37	4.2	840	1.05	324.7	**BF40Z-../DSE07LA4**	55	10600	-
0.37	3.9	900	1.0	346.8	**BF40Z-../DSE07LA4**	55	10600	-
0.37	3.6	980	0.92	381.5	**BF40Z-../DSE07LA4**	55	10600	-
0.37	3.3	1070	0.84	417.3	**BF40Z-../DSE07LA4**	55	10600	-
0.37	8.8	400	3.3	154.5	**BF50Z-../DSE07LA4**	85	13600	-
0.37	7.4	475	2.7	183.5	**BF50Z-../DSE07LA4**	85	13600	-
0.37	6.6	530	2.5	205.2	**BF50Z-../DSE07LA4**	85	13600	-
0.37	5.5	640	2.0	247.5	**BF50Z-../DSE07LA4**	85	13600	-
0.37	4.9	720	1.8	276.8	**BF50Z-../DSE07LA4**	85	13600	-
0.37	4.3	820	1.6	316.6	**BF50Z-../DSE07LA4**	85	13600	-
0.37	3.9	900	1.45	354.0	**BF50Z-../DSE07LA4**	85	13600	-
0.37	3.5	1000	1.3	392.8	**BF50Z-../DSE07LA4**	85	13600	-
0.37	3.1	1130	1.15	439.3	**BF50Z-../DSE07LA4**	85	13600	-
0.37	2.8	1260	1.05	496.4	**BF50Z-../DSE07LA4**	85	13600	-
0.37	2.5	1410	0.92	555.2	**BF50Z-../DSE07LA4**	85	13600	-
0.37	2.0	1570	0.89	680.9	**BF50G10-../DSE07LA4**	89	13600	-
0.37	2.4	1230	2.0	569.3	**BF60G20-../DSE07LA4**	136	15300	43300
0.37	2.0	1470	1.7	689.0	**BF60G20-../DSE07LA4**	136	15300	43300
0.37	1.7	1770	1.4	813.2	**BF60G20-../DSE07LA4**	136	15300	43300
0.37	1.5	2050	1.2	937.6	**BF60G20-../DSE07LA4**	136	15300	43300
0.37	1.2	2600	0.96	1211	**BF60G20-../DSE07LA4**	136	15300	43300
0.37	1.6	1950	2.9	872.1	**BF70G20-../DSE07LA4**	215	16100	47700
0.37	1.4	2200	2.6	1017	**BF70G20-../DSE07LA4**	215	16100	47700
0.37	1.0	3150	1.8	1390	**BF70G20-../DSE07LA4**	215	16100	47700
0.37	0.85	3700	1.55	1621	**BF70G20-../DSE07LA4**	215	16100	47700
0.37	0.75	4250	1.35	1912	**BF70G20-../DSE07LA4**	215	16100	47700
0.37	0.6	5400	1.05	2448	**BF70G20-../DSE07LA4**	215	16100	47700

0.55 kW

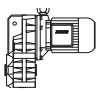

P_N	50 Hz			i	Type	m		
	n_2	M_2	f_B					
[kW]	[1/min]	[Nm]	[—]	[:1]		[kg]	[N]	[N]
0.55	245	21	3.0	5.72	**BF06-../DSE08MA4**	16	1600	-
0.55	183	28.5	2.4	7.66	**BF06-../DSE08MA4**	16	1800	-

The torques marked (*) are maximum permissible torques for service factor f_B=1.0.

0.55 kW

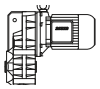

P_N	50 Hz			i	Type	m		
	n_2	M_2	f_B					
[kW]	[1/min]	[Nm]	[—]	[:1]		[kg]	[N]	[N]
0.55	153	34	2.1	9.21	**BF06-../DSE08MA4**	16	1900	-
0.55	116	45	1.65	12.07	**BF06-../DSE08MA4**	16	2000	-
0.55	99	53	1.6	14.21	**BF06-../DSE08MA4**	16	2100	-
0.55	83	63	1.5	16.99	**BF06-../DSE08MA4**	16	2500	-
0.55	69	76	1.25	20.42	**BF06-../DSE08MA4**	16	2700	-
0.55	53	99	0.96	26.76	**BF06-../DSE08MA4**	16	3000	-
0.55	44.5	118	0.81	31.50	**BF06-../DSE08MA4**	16	3200	-
0.55	94	55	3.3	15.04	**BF10-../DSE08MA4**	27	2800	-
0.55	70	75	3.2	20.05	**BF10-../DSE08MA4**	27	3000	-
0.55	61	86	2.8	23.28	**BF10-../DSE08MA4**	27	3200	-
0.55	55	95	2.5	25.60	**BF10-../DSE08MA4**	27	3350	-
0.55	49.5	106	2.3	28.47	**BF10-../DSE08MA4**	27	3450	-
0.55	45	116	2.1	31.31	**BF10-../DSE08MA4**	27	3600	-
0.55	39	134	1.8	36.15	**BF10-../DSE08MA4**	27	3800	-
0.55	35.5	147	1.65	39.75	**BF10-../DSE08MA4**	27	3950	-
0.55	33	159	1.5	43.06	**BF10-../DSE08MA4**	27	4100	-
0.55	30	175	1.35	47.35	**BF10-../DSE08MA4**	27	4250	-
0.55	27.5	191	1.25	51.28	**BF10-../DSE08MA4**	27	4400	-
0.55	25	210	1.15	56.39	**BF10-../DSE08MA4**	27	4550	-
0.55	23	225	1.05	61.55	**BF10-../DSE08MA4**	27	4700	-
0.55	21	250	0.96	67.69	**BF10-../DSE08MA4**	27	4900	-
0.55	18.5	280	0.86	77.55	**BF10-../DSE08MA4**	27	5100	-
0.55	39.5	132	3.2	35.85	**BF20-../DSE08MA4**	33	4650	-
0.55	34	154	2.7	41.72	**BF20-../DSE08MA4**	33	4950	-
0.55	31	169	2.5	45.90	**BF20-../DSE08MA4**	33	5100	-
0.55	29	181	2.3	48.56	**BF20-../DSE08MA4**	33	5200	-
0.55	26.5	198	2.1	53.43	**BF20-../DSE08MA4**	33	5500	-
0.55	24.5	210	2.0	58.24	**BF20-../DSE08MA4**	33	5600	-
0.55	22	235	1.8	64.08	**BF20-../DSE08MA4**	33	5900	-
0.55	20.5	255	1.65	69.70	**BF20-../DSE08MA4**	33	6100	-
0.55	18.5	280	1.5	76.69	**BF20-../DSE08MA4**	33	6300	-
0.55	16.5	315	1.35	87.31	**BF20-../DSE08MA4**	33	6600	-
0.55	15	350	1.2	96.08	**BF20-../DSE08MA4**	33	6900	-
0.55	14	375	1.1	100.2	**BF20-../DSE08MA4**	33	7000	-
0.55	13	400	1.05	110.2	**BF20-../DSE08MA4**	33	7300	-
0.55	11.5	455	0.92	123.5	**BF20-../DSE08MA4**	33	7600	-
0.55	10.5	500	0.84	135.9	**BF20-../DSE08MA4**	33	7900	-
0.55	10	520	0.81	141.2	**BF20Z-../DSE08MA4**	35	7900	-
0.55	27	194	3.0	52.20	**BF30-../DSE08MA4**	43	5000	-
0.55	24.5	210	2.7	57.41	**BF30-../DSE08MA4**	43	5200	-
0.55	23	225	2.6	61.17	**BF30-../DSE08MA4**	43	5300	-
0.55	21	250	2.3	67.28	**BF30-../DSE08MA4**	43	5500	-
0.55	19.5	265	2.2	72.13	**BF30-../DSE08MA4**	43	5700	-
0.55	18	290	2.0	79.34	**BF30-../DSE08MA4**	43	5900	-
0.55	16.5	315	1.85	87.08	**BF30-../DSE08MA4**	43	6200	-
0.55	15	350	1.65	95.79	**BF30-../DSE08MA4**	43	6400	-
0.55	13.5	385	1.5	107.6	**BF30-../DSE08MA4**	43	6700	-
0.55	12	435	1.3	118.3	**BF30-../DSE08MA4**	43	7000	-
0.55	11.5	455	1.25	124.7	**BF30-../DSE08MA4**	43	7100	-
0.55	10.5	500	1.15	137.1	**BF30-../DSE08MA4**	43	7400	-
0.55	9.3	560	1.05	150.7	**BF30Z-../DSE08MA4**	46	7400	-
0.55	8.5	610	0.94	165.8	**BF30Z-../DSE08MA4**	46	7400	-
0.55	8.0	650	0.88	176.6	**BF30Z-../DSE08MA4**	46	7400	-
0.55	7.3	710	0.81	194.3	**BF30Z-../DSE08MA4**	46	7400	-
0.55	18	290	3.1	78.55	**BF40-../DSE08MA4**	53	8500	-
0.55	17	305	3.0	83.91	**BF40-../DSE08MA4**	53	8700	-
0.55	15.5	335	2.7	92.31	**BF40-../DSE08MA4**	53	9100	-
0.55	14	375	2.4	101.0	**BF40-../DSE08MA4**	53	9400	-
0.55	13	400	2.3	111.1	**BF40-../DSE08MA4**	53	9800	-
0.55	11.5	455	2.0	124.5	**BF40-../DSE08MA4**	53	10200	-
0.55	10.5	500	1.8	137.0	**BF40-../DSE08MA4**	53	10600	-
0.55	10	520	1.75	141.4	**BF40Z-../DSE08MA4**	56	10600	-
0.55	9.0	580	1.55	155.6	**BF40Z-../DSE08MA4**	56	10600	-
0.55	8.2	640	1.4	171.2	**BF40Z-../DSE08MA4**	56	10600	-
0.55	7.5	700	1.3	188.3	**BF40Z-../DSE08MA4**	56	10600	-
0.55	7.0	750	1.2	202.2	**BF40Z-../DSE08MA4**	56	10600	-

The torques marked (*) are maximum permissible torques for service factor f_B=1.0.

0.55 kW

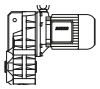

P_N	50 Hz			i	Type	m		
	n_2	M_2	f_B					
[kW]	[1/min]	[Nm]	[—]	[:1]		[kg]	[N]	[N]
0.55	6.3	830	1.1	222.4	**BF40Z-../DSE08MA4**	56	10600	-
0.55	5.6	930	0.97	253.2	**BF40Z-../DSE08MA4**	56	10600	-
0.55	5.1	1020	0.88	278.5	**BF40Z-../DSE08MA4**	56	10600	-
0.55	4.8	1090	0.83	295.1	**BF40Z-../DSE08MA4**	56	10600	-
0.55	12.5	420	3.1	114.0	**BF50-../DSE08MA4**	81	12900	-
0.55	11	475	2.7	127.5	**BF50-../DSE08MA4**	81	13600	-
0.55	10.5	500	2.6	138.1	**BF50Z-../DSE08MA4**	86	13600	-
0.55	9.1	570	2.3	154.5	**BF50Z-../DSE08MA4**	86	13600	-
0.55	7.7	680	1.9	183.5	**BF50Z-../DSE08MA4**	86	13600	-
0.55	6.9	760	1.7	205.2	**BF50Z-../DSE08MA4**	86	13600	-
0.55	5.7	920	1.4	247.5	**BF50Z-../DSE08MA4**	86	13600	-
0.55	5.1	1020	1.25	276.8	**BF50Z-../DSE08MA4**	86	13600	-
0.55	4.5	1160	1.1	316.6	**BF50Z-../DSE08MA4**	86	13600	-
0.55	4.0	1310	0.99	354.0	**BF50Z-../DSE08MA4**	86	13600	-
0.55	3.6	1450	0.9	392.8	**BF50Z-../DSE08MA4**	86	13600	-
0.55	7.5	700	3.3	187.7	**BF60Z-../DSE08MA4**	130	15300	43300
0.55	6.4	820	2.8	221.4	**BF60Z-../DSE08MA4**	130	15300	43300
0.55	5.8	900	2.6	245.6	**BF60Z-../DSE08MA4**	130	15300	43300
0.55	4.8	1090	2.1	293.4	**BF60Z-../DSE08MA4**	130	15300	43300
0.55	4.3	1220	1.9	325.6	**BF60Z-../DSE08MA4**	130	15300	43300
0.55	3.7	1410	1.65	380.0	**BF60Z-../DSE08MA4**	130	15300	43300
0.55	3.4	1540	1.5	421.6	**BF60Z-../DSE08MA4**	130	15300	43300
0.55	3.1	1690	1.35	459.9	**BF60Z-../DSE08MA4**	130	15300	43300
0.55	2.8	1870	1.25	510.3	**BF60Z-../DSE08MA4**	130	15300	43300
0.55	2.5	1860	1.35	569.3	**BF60G20-../DSE08MA4**	137	15300	43300
0.55	2.1	2200	1.15	689.0	**BF60G20-../DSE08MA4**	137	15300	43300
0.55	1.8	2600	0.96	813.2	**BF60G20-../DSE08MA4**	137	15300	43300
0.55	3.2	1640	3.2	439.2	**BF70Z-../DSE08MA4**	218	16100	47700
0.55	2.8	1870	2.8	512.4	**BF70Z-../DSE08MA4**	218	16100	47700
0.55	2.7	1720	3.3	524.1	**BF70G20-../DSE08MA4**	216	16100	47700
0.55	2.5	1850	3.1	577.5	**BF70G20-../DSE08MA4**	216	16100	47700
0.55	2.1	2200	2.6	673.6	**BF70G20-../DSE08MA4**	216	16100	47700
0.55	1.7	2800	2.0	872.1	**BF70G20-../DSE08MA4**	216	16100	47700
0.55	1.4	3450	1.65	1017	**BF70G20-../DSE08MA4**	216	16100	47700
0.55	1.1	4400	1.3	1390	**BF70G20-../DSE08MA4**	216	16100	47700
0.55	0.9	5400	1.05	1621	**BF70G20-../DSE08MA4**	216	16100	47700
0.55	1.5	3500	3.0	990.4	**BF80Z-../DSE08MA4**	334	39600	75000
0.55	1.3	4000	2.6	1124	**BF80Z-../DSE08MA4**	334	39600	75000
0.55	1.1	3300	3.2	1329	**BF80G40-../DSE08MA4**	340	39600	75000
0.55	0.95	4100	2.6	1491	**BF80G40-../DSE08MA4**	340	39600	75000
0.55	0.85	4550	2.3	1693	**BF80G40-../DSE08MA4**	340	39600	75000
0.55	0.7	5900	1.8	2051	**BF80G40-../DSE08MA4**	340	39600	75000
0.55	0.6	7100	1.5	2422	**BF80G40-../DSE08MA4**	340	39600	75000
0.55	0.55	7500	1.4	2785	**BF80G40-../DSE08MA4**	340	39600	75000
0.55	0.46	9300	1.15	3092	**BF80G40-../DSE08MA4**	340	39600	75000
0.55	0.65	6000	3.1	2154	**BF90G50-../DSE08MA4**	610	42800	120000
0.55	0.55	7100	2.6	2656	**BF90G50-../DSE08MA4**	610	42800	120000
0.55	0.48	8600	2.2	2952	**BF90G50-../DSE08MA4**	610	42800	120000
0.55	0.43	9700	1.9	3286	**BF90G50-../DSE08MA4**	610	42800	120000
0.55	0.39	10900	1.7	3644	**BF90G50-../DSE08MA4**	610	42800	120000
0.55	0.33	13400	1.4	4366	**BF90G50-../DSE08MA4**	610	42800	120000
0.55	0.29	15600	1.2	4839	**BF90G50-../DSE08MA4**	610	42800	120000

0.75 kW

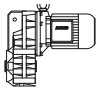

P_N	50 Hz			i	Type	m		
	n_2	M_2	f_B					
[kW]	[1/min]	[Nm]	[—]	[:1]		[kg]	[N]	[N]
0.75	245	29	2.1	5.72	**BF06-../DSE08LA4**	17	1600	-
0.75	183	39	1.75	7.66	**BF06-../DSE08LA4**	17	1800	-
0.75	153	46.5	1.5	9.21	**BF06-../DSE08LA4**	17	1900	-

The torques marked (*) are maximum permissible torques for service factor f_B=1.0.

0.75 kW

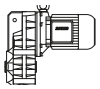

P_N	50 Hz			i	Type	m		
	n_2	M_2	f_B					
[kW]	[1/min]	[Nm]	[—]	[:1]		[kg]	[N]	[N]
0.75	116	61	1.25	12.07	**BF06-../DSE08LA4**	17	2000	-
0.75	99	72	1.2	14.21	**BF06-../DSE08LA4**	17	2100	-
0.75	83	86	1.1	16.99	**BF06-../DSE08LA4**	17	2500	-
0.75	69	103	0.92	20.42	**BF06-../DSE08LA4**	17	2700	-
0.75	119	60	3.1	11.84	**BF10-../DSE08LA4**	28	2500	-
0.75	94	76	2.4	15.04	**BF10-../DSE08LA4**	28	2800	-
0.75	77	93	2.6	18.23	**BF10-../DSE08LA4**	28	2900	-
0.75	70	102	2.4	20.05	**BF10-../DSE08LA4**	28	3000	-
0.75	61	117	2.1	23.28	**BF10-../DSE08LA4**	28	3200	-
0.75	55	130	1.85	25.60	**BF10-../DSE08LA4**	28	3350	-
0.75	49.5	144	1.65	28.47	**BF10-../DSE08LA4**	28	3450	-
0.75	45	159	1.5	31.31	**BF10-../DSE08LA4**	28	3600	-
0.75	39	183	1.3	36.15	**BF10-../DSE08LA4**	28	3800	-
0.75	35.5	200	1.2	39.75	**BF10-../DSE08LA4**	28	3950	-
0.75	33	215	1.1	43.06	**BF10-../DSE08LA4**	28	4100	-
0.75	30	235	1.0	47.35	**BF10-../DSE08LA4**	28	4250	-
0.75	27.5	260	0.92	51.28	**BF10-../DSE08LA4**	28	4400	-
0.75	25	285	0.84	56.39	**BF10-../DSE08LA4**	28	4550	-
0.75	58	123	3.3	24.25	**BF20-../DSE08LA4**	35	3950	-
0.75	51	140	3.0	27.62	**BF20-../DSE08LA4**	35	4150	-
0.75	46.5	154	2.7	30.40	**BF20-../DSE08LA4**	35	4400	-
0.75	43	166	2.5	32.58	**BF20-../DSE08LA4**	35	4450	-
0.75	39.5	181	2.3	35.85	**BF20-../DSE08LA4**	35	4650	-
0.75	34	210	2.0	41.72	**BF20-../DSE08LA4**	35	4950	-
0.75	31	230	1.85	45.90	**BF20-../DSE08LA4**	35	5100	-
0.75	29	245	1.7	48.56	**BF20-../DSE08LA4**	35	5200	-
0.75	26.5	270	1.55	53.43	**BF20-../DSE08LA4**	35	5500	-
0.75	24.5	290	1.45	58.24	**BF20-../DSE08LA4**	35	5600	-
0.75	22	325	1.3	64.08	**BF20-../DSE08LA4**	35	5900	-
0.75	20.5	345	1.2	69.70	**BF20-../DSE08LA4**	35	6100	-
0.75	18.5	385	1.1	76.69	**BF20-../DSE08LA4**	35	6300	-
0.75	16.5	430	0.98	87.31	**BF20-../DSE08LA4**	35	6600	-
0.75	15	475	0.88	96.08	**BF20-../DSE08LA4**	35	6900	-
0.75	14	510	0.82	100.2	**BF20-../DSE08LA4**	35	7000	-
0.75	40	179	3.2	35.00	**BF30-../DSE08LA4**	45	4200	-
0.75	36.5	196	2.9	38.49	**BF30-../DSE08LA4**	45	4400	-
0.75	34.5	205	2.8	41.01	**BF30-../DSE08LA4**	45	4500	-
0.75	31.5	225	2.6	45.10	**BF30-../DSE08LA4**	45	4700	-
0.75	27	265	2.2	52.20	**BF30-../DSE08LA4**	45	5000	-
0.75	24.5	290	2.0	57.41	**BF30-../DSE08LA4**	45	5200	-
0.75	23	310	1.85	61.17	**BF30-../DSE08LA4**	45	5300	-
0.75	21	340	1.7	67.28	**BF30-../DSE08LA4**	45	5500	-
0.75	19.5	365	1.6	72.13	**BF30-../DSE08LA4**	45	5700	-
0.75	18	395	1.45	79.34	**BF30-../DSE08LA4**	45	5900	-
0.75	16.5	430	1.35	87.08	**BF30-../DSE08LA4**	45	6200	-
0.75	15	475	1.2	95.79	**BF30-../DSE08LA4**	45	6400	-
0.75	13.5	530	1.1	107.6	**BF30-../DSE08LA4**	45	6700	-
0.75	12	590	0.97	118.3	**BF30-../DSE08LA4**	45	7000	-
0.75	11.5	620	0.93	124.7	**BF30-../DSE08LA4**	45	7100	-
0.75	10.5	680	0.85	137.1	**BF30-../DSE08LA4**	45	7400	-
0.75	26.5	270	3.3	53.82	**BF40-../DSE08LA4**	54	7200	-
0.75	23	310	2.9	61.25	**BF40-../DSE08LA4**	54	7600	-
0.75	21	340	2.6	67.38	**BF40-../DSE08LA4**	54	8000	-
0.75	20	355	2.5	71.40	**BF40-../DSE08LA4**	54	8100	-
0.75	18	395	2.3	78.55	**BF40-../DSE08LA4**	54	8500	-
0.75	17	420	2.1	83.91	**BF40-../DSE08LA4**	54	8700	-
0.75	15.5	460	1.95	92.31	**BF40-../DSE08LA4**	54	9100	-
0.75	14	510	1.75	101.0	**BF40-../DSE08LA4**	54	9400	-
0.75	13	550	1.65	111.1	**BF40-../DSE08LA4**	54	9800	-
0.75	11.5	620	1.45	124.5	**BF40-../DSE08LA4**	54	10200	-
0.75	10.5	680	1.3	137.0	**BF40-../DSE08LA4**	54	10600	-
0.75	10	710	1.25	141.4	**BF40Z-../DSE08LA4**	58	10600	-
0.75	9.0	790	1.15	155.6	**BF40Z-../DSE08LA4**	58	10600	-
0.75	8.2	870	1.05	171.2	**BF40Z-../DSE08LA4**	58	10600	-
0.75	7.5	950	0.95	188.3	**BF40Z-../DSE08LA4**	58	10600	-
0.75	7.0	1020	0.88	202.2	**BF40Z-../DSE08LA4**	58	10600	-

The torques marked (*) are maximum permissible torques for service factor f_B=1.0.

0.75 kW

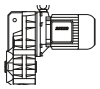

P_N	50 Hz			i	Type	m		
	n_2	M_2	f_B					
[kW]	[1/min]	[Nm]	[—]	[:1]		[kg]	[N]	[N]
0.75	6.3	1130	0.8	222.4	**BF40Z-../DSE08LA4**	58	10600	-
0.75	17.5	405	3.2	81.33	**BF50-../DSE08LA4**	83	11300	-
0.75	16	445	2.9	90.24	**BF50-../DSE08LA4**	83	11800	-
0.75	14	510	2.5	100.9	**BF50-../DSE08LA4**	83	12300	-
0.75	12.5	570	2.3	114.0	**BF50-../DSE08LA4**	83	12900	-
0.75	11	650	2.0	127.5	**BF50-../DSE08LA4**	83	13600	-
0.75	10.5	680	1.9	138.1	**BF50Z-../DSE08LA4**	88	13600	-
0.75	9.1	780	1.65	154.5	**BF50Z-../DSE08LA4**	88	13600	-
0.75	7.7	930	1.4	183.5	**BF50Z-../DSE08LA4**	88	13600	-
0.75	6.9	1030	1.25	205.2	**BF50Z-../DSE08LA4**	88	13600	-
0.75	5.7	1250	1.05	247.5	**BF50Z-../DSE08LA4**	88	13600	-
0.75	5.1	1400	0.93	276.8	**BF50Z-../DSE08LA4**	88	13600	-
0.75	4.5	1590	0.82	316.6	**BF50Z-../DSE08LA4**	88	13600	-
0.75	10	710	3.2	140.8	**BF60Z-../DSE08LA4**	131	15300	43300
0.75	8.3	860	2.7	169.2	**BF60Z-../DSE08LA4**	131	15300	43300
0.75	7.5	950	2.4	187.7	**BF60Z-../DSE08LA4**	131	15300	43300
0.75	6.4	1110	2.1	221.4	**BF60Z-../DSE08LA4**	131	15300	43300
0.75	5.8	1230	1.85	245.6	**BF60Z-../DSE08LA4**	131	15300	43300
0.75	4.8	1490	1.55	293.4	**BF60Z-../DSE08LA4**	131	15300	43300
0.75	4.3	1660	1.4	325.6	**BF60Z-../DSE08LA4**	131	15300	43300
0.75	3.7	1930	1.2	380.0	**BF60Z-../DSE08LA4**	131	15300	43300
0.75	3.4	2100	1.1	421.6	**BF60Z-../DSE08LA4**	131	15300	43300
0.75	3.1	2300	1.0	459.9	**BF60Z-../DSE08LA4**	131	15300	43300
0.75	2.8	2550	0.9	510.3	**BF60Z-../DSE08LA4**	131	15300	43300
0.75	2.5	2600	0.96	569.3	**BF60G20-../DSE08LA4**	139	15300	43300
0.75	2.1	3100	0.81	689.0	**BF60G20-../DSE08LA4**	139	15300	43300
0.75	4.1	1740	3.0	341.7	**BF70Z-../DSE08LA4**	220	16100	47700
0.75	3.6	1980	2.6	398.7	**BF70Z-../DSE08LA4**	220	16100	47700
0.75	3.2	2200	2.4	439.2	**BF70Z-../DSE08LA4**	220	16100	47700
0.75	2.8	2550	2.0	512.4	**BF70Z-../DSE08LA4**	220	16100	47700
0.75	2.7	2400	2.4	524.1	**BF70G20-../DSE08LA4**	217	16100	47700
0.75	2.5	2600	2.2	577.5	**BF70G20-../DSE08LA4**	217	16100	47700
0.75	2.1	3100	1.85	673.6	**BF70G20-../DSE08LA4**	217	16100	47700
0.75	1.7	3950	1.45	872.1	**BF70G20-../DSE08LA4**	217	16100	47700
0.75	1.4	4800	1.2	1017	**BF70G20-../DSE08LA4**	217	16100	47700
0.75	1.1	6100	0.93	1390	**BF70G20-../DSE08LA4**	217	16100	47700
0.75	2.2	3250	3.2	662.1	**BF80Z-../DSE08LA4**	336	39600	75000
0.75	1.9	3750	2.8	770.6	**BF80Z-../DSE08LA4**	336	39600	75000
0.75	1.7	4200	2.5	874.6	**BF80Z-../DSE08LA4**	336	39600	75000
0.75	1.5	4750	2.2	990.4	**BF80Z-../DSE08LA4**	336	39600	75000
0.75	1.3	5500	1.9	1124	**BF80Z-../DSE08LA4**	336	39600	75000
0.75	1.1	5000	2.1	1329	**BF80G40-../DSE08LA4**	341	39600	75000
0.75	0.95	6100	1.7	1491	**BF80G40-../DSE08LA4**	341	39600	75000
0.75	0.85	6800	1.55	1693	**BF80G40-../DSE08LA4**	341	39600	75000
0.75	0.7	8600	1.2	2051	**BF80G40-../DSE08LA4**	341	39600	75000
0.75	0.6	10300	1.0	2422	**BF80G40-../DSE08LA4**	341	39600	75000
0.75	1.0	5700	3.2	1444	**BF90G50-../DSE08LA4**	612	42800	120000
0.75	0.85	6800	2.7	1678	**BF90G50-../DSE08LA4**	612	42800	120000
0.75	0.75	7700	2.4	1867	**BF90G50-../DSE08LA4**	612	42800	120000
0.75	0.65	8900	2.1	2154	**BF90G50-../DSE08LA4**	612	42800	120000
0.75	0.55	10600	1.75	2656	**BF90G50-../DSE08LA4**	612	42800	120000
0.75	0.48	12600	1.45	2952	**BF90G50-../DSE08LA4**	612	42800	120000
0.75	0.43	14100	1.3	3286	**BF90G50-../DSE08LA4**	612	42800	120000
0.75	0.39	15800	1.15	3644	**BF90G50-../DSE08LA4**	612	42800	120000

1.1 kW

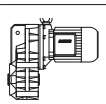

P_N	50 Hz			i	Type	m		
	n_2	M_2	f_B					
[kW]	[1/min]	[Nm]	[—]	[:1]		[kg]	[N]	[N]
1.1	245	42.5	1.45	5.72	**BF06-../DSE08XA4**	18	1600	-

The torques marked (*) are maximum permissible torques for service factor f_B=1.0.

1.1 kW

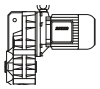

P_N	50 Hz			i	Type	m		
	n_2	M_2	f_B					
[kW]	[1/min]	[Nm]	[—]	[:1]		[kg]	[N]	[N]
1.1	183	57	1.2	7.66	**BF06-../DSE08XA4**	18	1800	-
1.1	153	68	1.05	9.21	**BF06-../DSE08XA4**	18	1900	-
1.1	116	90	0.83	12.07	**BF06-../DSE08XA4**	18	2000	-
1.1	99	106	0.8	14.21	**BF06-../DSE08XA4**	18	2100	-
1.1	250	42	3.3	5.60	**BF10-../DSE08XA4**	30	1950	-
1.1	185	56	2.7	7.58	**BF10-../DSE08XA4**	30	2200	-
1.1	145	72	2.5	9.69	**BF10-../DSE08XA4**	30	2350	-
1.1	119	88	2.1	11.84	**BF10-../DSE08XA4**	30	2500	-
1.1	94	111	1.65	15.04	**BF10-../DSE08XA4**	30	2800	-
1.1	77	136	1.75	18.23	**BF10-../DSE08XA4**	30	2900	-
1.1	70	150	1.6	20.05	**BF10-../DSE08XA4**	30	3000	-
1.1	61	172	1.4	23.28	**BF10-../DSE08XA4**	30	3200	-
1.1	55	191	1.25	25.60	**BF10-../DSE08XA4**	30	3350	-
1.1	49.5	210	1.15	28.47	**BF10-../DSE08XA4**	30	3450	-
1.1	45	230	1.05	31.31	**BF10-../DSE08XA4**	30	3600	-
1.1	39	265	0.91	36.15	**BF10-../DSE08XA4**	30	3800	-
1.1	35.5	295	0.81	39.75	**BF10-../DSE08XA4**	30	3950	-
1.1	134	78	3.3	10.51	**BF20-../DSE08XA4**	36	3100	-
1.1	107	98	2.9	13.18	**BF20-../DSE08XA4**	36	3300	-
1.1	91	115	2.7	15.54	**BF20-../DSE08XA4**	36	3450	-
1.1	84	125	2.9	16.77	**BF20-../DSE08XA4**	36	3500	-
1.1	76	138	2.7	18.45	**BF20-../DSE08XA4**	36	3600	-
1.1	64	164	2.4	22.04	**BF20-../DSE08XA4**	36	3800	-
1.1	58	181	2.2	24.25	**BF20-../DSE08XA4**	36	3950	-
1.1	51	205	2.0	27.62	**BF20-../DSE08XA4**	36	4150	-
1.1	46.5	225	1.85	30.40	**BF20-../DSE08XA4**	36	4400	-
1.1	43	240	1.75	32.58	**BF20-../DSE08XA4**	36	4450	-
1.1	39.5	265	1.6	35.85	**BF20-../DSE08XA4**	36	4650	-
1.1	34	305	1.4	41.72	**BF20-../DSE08XA4**	36	4950	-
1.1	31	335	1.25	45.90	**BF20-../DSE08XA4**	36	5100	-
1.1	29	360	1.15	48.56	**BF20-../DSE08XA4**	36	5200	-
1.1	26.5	395	1.05	53.43	**BF20-../DSE08XA4**	36	5500	-
1.1	24.5	425	0.99	58.24	**BF20-../DSE08XA4**	36	5600	-
1.1	22	475	0.88	64.08	**BF20-../DSE08XA4**	36	5900	-
1.1	20.5	510	0.82	69.70	**BF20-../DSE08XA4**	36	6100	-
1.1	65	161	3.3	21.85	**BF30-../DSE08XA4**	46	3500	-
1.1	59	178	3.1	24.03	**BF30-../DSE08XA4**	46	3600	-
1.1	50	210	2.7	28.23	**BF30-../DSE08XA4**	46	3800	-
1.1	45.5	230	2.5	31.05	**BF30-../DSE08XA4**	46	4000	-
1.1	40	260	2.2	35.00	**BF30-../DSE08XA4**	46	4200	-
1.1	36.5	285	2.0	38.49	**BF30-../DSE08XA4**	46	4400	-
1.1	34.5	300	1.9	41.01	**BF30-../DSE08XA4**	46	4500	-
1.1	31.5	330	1.75	45.10	**BF30-../DSE08XA4**	46	4700	-
1.1	27	385	1.5	52.20	**BF30-../DSE08XA4**	46	5000	-
1.1	24.5	425	1.35	57.41	**BF30-../DSE08XA4**	46	5200	-
1.1	23	455	1.25	61.17	**BF30-../DSE08XA4**	46	5300	-
1.1	21	500	1.15	67.28	**BF30-../DSE08XA4**	46	5500	-
1.1	19.5	530	1.1	72.13	**BF30-../DSE08XA4**	46	5700	-
1.1	18	580	0.99	79.34	**BF30-../DSE08XA4**	46	5900	-
1.1	16.5	630	0.91	87.08	**BF30-../DSE08XA4**	46	6200	-
1.1	15	700	0.82	95.79	**BF30-../DSE08XA4**	46	6400	-
1.1	37.5	280	3.2	37.64	**BF40-../DSE08XA4**	55	6200	-
1.1	34	305	3.0	41.42	**BF40-../DSE08XA4**	55	6500	-
1.1	31	335	2.7	45.56	**BF40-../DSE08XA4**	55	6800	-
1.1	29	360	2.5	48.92	**BF40-../DSE08XA4**	55	7000	-
1.1	26.5	395	2.3	53.82	**BF40-../DSE08XA4**	55	7200	-
1.1	23	455	2.0	61.25	**BF40-../DSE08XA4**	55	7600	-
1.1	21	500	1.8	67.38	**BF40-../DSE08XA4**	55	8000	-
1.1	20	520	1.75	71.40	**BF40-../DSE08XA4**	55	8100	-
1.1	18	580	1.55	78.55	**BF40-../DSE08XA4**	55	8500	-
1.1	17	610	1.5	83.91	**BF40-../DSE08XA4**	55	8700	-
1.1	15.5	670	1.35	92.31	**BF40-../DSE08XA4**	55	9100	-
1.1	14	750	1.2	101.0	**BF40-../DSE08XA4**	55	9400	-
1.1	13	800	1.15	111.1	**BF40-../DSE08XA4**	55	9800	-
1.1	11.5	910	0.99	124.5	**BF40-../DSE08XA4**	55	10200	-
1.1	10.5	1000	0.9	137.0	**BF40-../DSE08XA4**	55	10600	-

The torques marked (*) are maximum permissible torques for service factor f_B=1.0.

1.1 kW

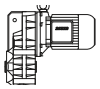

P_N	50 Hz			i	Type	m		
	n_2	M_2	f_B					
[kW]	[1/min]	[Nm]	[—]	[:1]		[kg]	[N]	[N]
1.1	10	1050	0.86	141.4	**BF40Z-../DSE08XA4**	59	10600	-
1.1	25	420	3.1	56.86	**BF50-../DSE08XA4**	84	9300	-
1.1	22.5	465	2.8	63.59	**BF50-../DSE08XA4**	84	9800	-
1.1	19.5	530	2.5	72.72	**BF50-../DSE08XA4**	84	10700	-
1.1	17.5	600	2.2	81.33	**BF50-../DSE08XA4**	84	11300	-
1.1	16	650	2.0	90.24	**BF50-../DSE08XA4**	84	11800	-
1.1	14	750	1.75	100.9	**BF50-../DSE08XA4**	84	12300	-
1.1	12.5	840	1.55	114.0	**BF50-../DSE08XA4**	84	12900	-
1.1	11	950	1.35	127.5	**BF50-../DSE08XA4**	84	13600	-
1.1	10.5	1000	1.3	138.1	**BF50Z-../DSE08XA4**	88	13600	-
1.1	9.1	1150	1.15	154.5	**BF50Z-../DSE08XA4**	88	13600	-
1.1	7.7	1360	0.96	183.5	**BF50Z-../DSE08XA4**	88	13600	-
1.1	6.9	1520	0.86	205.2	**BF50Z-../DSE08XA4**	88	13600	-
1.1	10	1050	2.2	140.8	**BF60Z-../DSE08XA4**	132	15300	43300
1.1	8.3	1260	1.85	169.2	**BF60Z-../DSE08XA4**	132	15300	43300
1.1	7.5	1400	1.65	187.7	**BF60Z-../DSE08XA4**	132	15300	43300
1.1	6.4	1640	1.4	221.4	**BF60Z-../DSE08XA4**	132	15300	43300
1.1	5.8	1810	1.25	245.6	**BF60Z-../DSE08XA4**	132	15300	43300
1.1	4.8	2150	1.05	293.4	**BF60Z-../DSE08XA4**	132	15300	43300
1.1	4.3	2400	0.96	325.6	**BF60Z-../DSE08XA4**	132	15300	43300
1.1	3.7	2800	0.82	380.0	**BF60Z-../DSE08XA4**	132	15300	43300
1.1	6.1	1720	3.0	233.0	**BF70Z-../DSE08XA4**	220	16100	47700
1.1	5.5	1910	2.7	258.7	**BF70Z-../DSE08XA4**	220	16100	47700
1.1	4.7	2200	2.4	301.8	**BF70Z-../DSE08XA4**	220	16100	47700
1.1	4.1	2550	2.0	341.7	**BF70Z-../DSE08XA4**	220	16100	47700
1.1	3.6	2900	1.8	398.7	**BF70Z-../DSE08XA4**	220	16100	47700
1.1	3.2	3250	1.6	439.2	**BF70Z-../DSE08XA4**	220	16100	47700
1.1	2.8	3750	1.4	512.4	**BF70Z-../DSE08XA4**	220	16100	47700
1.1	2.7	3650	1.55	524.1	**BF70G20-../DSE08XA4**	218	16100	47700
1.1	2.5	3950	1.45	577.5	**BF70G20-../DSE08XA4**	218	16100	47700
1.1	2.1	4700	1.2	673.6	**BF70G20-../DSE08XA4**	218	16100	47700
1.1	1.7	5900	0.97	872.1	**BF70G20-../DSE08XA4**	218	16100	47700
1.1	3.2	3250	3.2	450.4	**BF80Z-../DSE08XA4**	337	39600	75000
1.1	2.8	3750	2.8	511.2	**BF80Z-../DSE08XA4**	337	39600	75000
1.1	2.4	4350	2.4	583.4	**BF80Z-../DSE08XA4**	337	39600	75000
1.1	2.2	4750	2.2	662.1	**BF80Z-../DSE08XA4**	337	39600	75000
1.1	1.9	5500	1.9	770.6	**BF80Z-../DSE08XA4**	337	39600	75000
1.1	1.7	6100	1.7	874.6	**BF80Z-../DSE08XA4**	337	39600	75000
1.1	1.5	7000	1.5	990.4	**BF80Z-../DSE08XA4**	337	39600	75000
1.1	1.3	8000	1.3	1124	**BF80Z-../DSE08XA4**	337	39600	75000
1.1	1.1	8100	1.3	1329	**BF80G40-../DSE08XA4**	342	39600	75000
1.1	0.95	9600	1.1	1491	**BF80G40-../DSE08XA4**	342	39600	75000
1.1	1.4	6100	3.0	1043	**BF90G50-../DSE08XA4**	613	42800	120000
1.1	1.2	7100	2.6	1204	**BF90G50-../DSE08XA4**	613	42800	120000
1.1	1.0	9100	2.0	1444	**BF90G50-../DSE08XA4**	613	42800	120000
1.1	0.85	10700	1.75	1678	**BF90G50-../DSE08XA4**	613	42800	120000
1.1	0.75	12200	1.5	1867	**BF90G50-../DSE08XA4**	613	42800	120000
1.1	0.65	14100	1.3	2154	**BF90G50-../DSE08XA4**	613	42800	120000
1.1	0.55	16700	1.1	2656	**BF90G50-../DSE08XA4**	613	42800	120000

1.5 kW

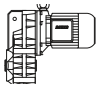

P_N	50 Hz			i	Type	m		
	n_2	M_2	f_B					
[kW]	[1/min]	[Nm]	[—]	[:1]		[kg]	[N]	[N]
1.5	255	56	2.5	5.60	**BF10-../DSE09LA4**	36	1950	-
1.5	188	76	2.0	7.58	**BF10-../DSE09LA4**	36	2200	-
1.5	147	97	1.8	9.69	**BF10-../DSE09LA4**	36	2350	-
1.5	120	119	1.55	11.84	**BF10-../DSE09LA4**	36	2500	-
1.5	95	150	1.2	15.04	**BF10-../DSE09LA4**	36	2800	-
1.5	78	183	1.3	18.23	**BF10-../DSE09LA4**	36	2900	-

The torques marked (*) are maximum permissible torques for service factor f_B=1.0.

1.5 kW

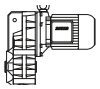

P_N	50 Hz			i	Type	m		
	n_2	M_2	f_B					
[kW]	[1/min]	[Nm]	[—]	[:1]		[kg]	[N]	[N]
1.5	71	200	1.2	20.05	**BF10-../DSE09LA4**	36	3000	-
1.5	61	230	1.05	23.28	**BF10-../DSE09LA4**	36	3200	-
1.5	56	255	0.94	25.60	**BF10-../DSE09LA4**	36	3350	-
1.5	50	285	0.84	28.47	**BF10-../DSE09LA4**	36	3450	-
1.5	178	80	2.8	8.00	**BF20-../DSE09LA4**	42	2850	-
1.5	136	105	2.4	10.51	**BF20-../DSE09LA4**	42	3100	-
1.5	108	132	2.2	13.18	**BF20-../DSE09LA4**	42	3300	-
1.5	92	155	2.0	15.54	**BF20-../DSE09LA4**	42	3450	-
1.5	85	168	2.2	16.77	**BF20-../DSE09LA4**	42	3500	-
1.5	77	186	2.0	18.45	**BF20-../DSE09LA4**	42	3600	-
1.5	65	220	1.8	22.04	**BF20-../DSE09LA4**	42	3800	-
1.5	59	240	1.7	24.25	**BF20-../DSE09LA4**	42	3950	-
1.5	52	275	1.55	27.62	**BF20-../DSE09LA4**	42	4150	-
1.5	47	300	1.4	30.40	**BF20-../DSE09LA4**	42	4400	-
1.5	44	325	1.3	32.58	**BF20-../DSE09LA4**	42	4450	-
1.5	40	355	1.2	35.85	**BF20-../DSE09LA4**	42	4650	-
1.5	34.5	415	1.0	41.72	**BF20-../DSE09LA4**	42	4950	-
1.5	31	460	0.91	45.90	**BF20-../DSE09LA4**	42	5100	-
1.5	29.5	485	0.87	48.56	**BF20-../DSE09LA4**	42	5200	-
1.5	143	100	3.2	9.99	**BF30-../DSE09LA4**	53	2850	-
1.5	110	130	2.8	12.91	**BF30-../DSE09LA4**	53	3050	-
1.5	89	160	2.6	16.00	**BF30-../DSE09LA4**	53	3250	-
1.5	81	176	2.7	17.65	**BF30-../DSE09LA4**	53	3300	-
1.5	74	193	2.6	19.41	**BF30-../DSE09LA4**	53	3400	-
1.5	65	220	2.4	21.85	**BF30-../DSE09LA4**	53	3500	-
1.5	60	235	2.4	24.03	**BF30-../DSE09LA4**	53	3600	-
1.5	51	280	2.1	28.23	**BF30-../DSE09LA4**	53	3800	-
1.5	46	310	1.85	31.05	**BF30-../DSE09LA4**	53	4000	-
1.5	41	345	1.65	35.00	**BF30-../DSE09LA4**	53	4200	-
1.5	37	385	1.5	38.49	**BF30-../DSE09LA4**	53	4400	-
1.5	35	405	1.4	41.01	**BF30-../DSE09LA4**	53	4500	-
1.5	31.5	450	1.3	45.10	**BF30-../DSE09LA4**	53	4700	-
1.5	27.5	520	1.1	52.20	**BF30-../DSE09LA4**	53	5000	-
1.5	25	570	1.0	57.41	**BF30-../DSE09LA4**	53	5200	-
1.5	23.5	600	0.96	61.17	**BF30-../DSE09LA4**	53	5300	-
1.5	21.5	660	0.87	67.28	**BF30-../DSE09LA4**	53	5500	-
1.5	20	710	0.81	72.13	**BF30-../DSE09LA4**	53	5700	-
1.5	66	215	3.3	21.60	**BF40-../DSE09LA4**	62	5200	-
1.5	60	235	3.1	23.77	**BF40-../DSE09LA4**	62	5400	-
1.5	53	270	2.9	26.86	**BF40-../DSE09LA4**	62	5600	-
1.5	48.5	295	2.7	29.55	**BF40-../DSE09LA4**	62	5800	-
1.5	42	340	2.5	34.21	**BF40-../DSE09LA4**	62	6000	-
1.5	38	375	2.4	37.64	**BF40-../DSE09LA4**	62	6200	-
1.5	34.5	415	2.2	41.42	**BF40-../DSE09LA4**	62	6500	-
1.5	31.5	450	2.0	45.56	**BF40-../DSE09LA4**	62	6800	-
1.5	29.5	485	1.85	48.92	**BF40-../DSE09LA4**	62	7000	-
1.5	26.5	540	1.65	53.82	**BF40-../DSE09LA4**	62	7200	-
1.5	23.5	600	1.5	61.25	**BF40-../DSE09LA4**	62	7600	-
1.5	21.5	660	1.35	67.38	**BF40-../DSE09LA4**	62	8000	-
1.5	20	710	1.25	71.40	**BF40-../DSE09LA4**	62	8100	-
1.5	18.5	770	1.15	78.55	**BF40-../DSE09LA4**	62	8500	-
1.5	17	840	1.05	83.91	**BF40-../DSE09LA4**	62	8700	-
1.5	15.5	920	0.98	92.31	**BF40-../DSE09LA4**	62	9100	-
1.5	14.5	980	0.92	101.0	**BF40-../DSE09LA4**	62	9400	-
1.5	13	1100	0.82	111.1	**BF40-../DSE09LA4**	62	9800	-
1.5	34	420	3.1	42.15	**BF50-../DSE09LA4**	90	8500	-
1.5	30.5	465	2.8	47.14	**BF50-../DSE09LA4**	90	8900	-
1.5	25	570	2.3	56.86	**BF50-../DSE09LA4**	90	9300	-
1.5	22.5	630	2.1	63.59	**BF50-../DSE09LA4**	90	9800	-
1.5	20	710	1.85	72.72	**BF50-../DSE09LA4**	90	10700	-
1.5	17.5	810	1.6	81.33	**BF50-../DSE09LA4**	90	11300	-
1.5	16	890	1.45	90.24	**BF50-../DSE09LA4**	90	11800	-
1.5	14.5	980	1.35	100.9	**BF50-../DSE09LA4**	90	12300	-
1.5	12.5	1140	1.15	114.0	**BF50-../DSE09LA4**	90	12900	-
1.5	11.5	1240	1.05	127.5	**BF50-../DSE09LA4**	90	13600	-
1.5	10.5	1360	0.96	138.1	**BF50Z-../DSE09LA4**	95	13600	-

The torques marked (*) are maximum permissible torques for service factor f_B=1.0.

1.5 kW

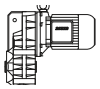

P_N	50 Hz			i	Type	m		
	n_2	M_2	f_B					
[kW]	[1/min]	[Nm]	[—]	[:1]		[kg]	[N]	[N]
1.5	9.2	1550	0.84	154.5	**BF50Z-../DSE09LA4**	95	13600	-
1.5	20	710	3.2	72.15	**BF60-../DSE09LA4**	120	12000	34000
1.5	18	790	2.9	80.05	**BF60-../DSE09LA4**	120	12600	35600
1.5	15.5	920	2.5	93.44	**BF60-../DSE09LA4**	120	13500	38200
1.5	14	1020	2.3	103.7	**BF60-../DSE09LA4**	120	14100	39900
1.5	13	1100	2.1	113.1	**BF60-../DSE09LA4**	120	14600	41300
1.5	11.5	1240	1.85	125.5	**BF60-../DSE09LA4**	120	15300	43300
1.5	10.5	1360	1.7	140.8	**BF60Z-../DSE09LA4**	139	15300	43300
1.5	8.4	1700	1.35	169.2	**BF60Z-../DSE09LA4**	139	15300	43300
1.5	7.6	1880	1.2	187.7	**BF60Z-../DSE09LA4**	139	15300	43300
1.5	6.5	2200	1.05	221.4	**BF60Z-../DSE09LA4**	139	15300	43300
1.5	5.8	2450	0.94	245.6	**BF60Z-../DSE09LA4**	139	15300	43300
1.5	8.0	1790	2.9	179.7	**BF70Z-../DSE09LA4**	227	16100	47700
1.5	7.2	1980	2.6	199.7	**BF70Z-../DSE09LA4**	227	16100	47700
1.5	6.1	2300	2.3	233.0	**BF70Z-../DSE09LA4**	227	16100	47700
1.5	5.5	2600	2.0	258.7	**BF70Z-../DSE09LA4**	227	16100	47700
1.5	4.8	2950	1.75	301.8	**BF70Z-../DSE09LA4**	227	16100	47700
1.5	4.2	3400	1.55	341.7	**BF70Z-../DSE09LA4**	227	16100	47700
1.5	3.6	3950	1.3	398.7	**BF70Z-../DSE09LA4**	227	16100	47700
1.5	3.3	4300	1.2	439.2	**BF70Z-../DSE09LA4**	227	16100	47700
1.5	2.8	5100	1.0	512.4	**BF70Z-../DSE09LA4**	227	16100	47700
1.5	2.5	5400	1.05	577.5	**BF70G20-../DSE09LA4**	225	16100	47700
1.5	2.2	6200	0.92	673.6	**BF70G20-../DSE09LA4**	225	16100	47700
1.5	4.1	3450	3.0	347.3	**BF80Z-../DSE09LA4**	344	39600	75000
1.5	3.7	3850	2.7	394.2	**BF80Z-../DSE09LA4**	344	39600	75000
1.5	3.2	4450	2.4	450.4	**BF80Z-../DSE09LA4**	344	39600	75000
1.5	2.8	5100	2.1	511.2	**BF80Z-../DSE09LA4**	344	39600	75000
1.5	2.5	5700	1.85	583.4	**BF80Z-../DSE09LA4**	344	39600	75000
1.5	2.2	6500	1.6	662.1	**BF80Z-../DSE09LA4**	344	39600	75000
1.5	1.9	7500	1.4	770.6	**BF80Z-../DSE09LA4**	344	39600	75000
1.5	1.7	8400	1.25	874.6	**BF80Z-../DSE09LA4**	344	39600	75000
1.5	1.5	9500	1.1	990.4	**BF80Z-../DSE09LA4**	344	39600	75000
1.5	1.3	11000	0.95	1124	**BF80Z-../DSE09LA4**	344	39600	75000
1.5	1.1	11500	0.91	1329	**BF80G40-../DSE09LA4**	349	39600	75000
1.5	1.0	12900	0.81	1491	**BF80G40-../DSE09LA4**	349	39600	75000
1.5	2.5	5700	3.2	591.1	**BF90Z-../DSE09LA4**	608	42800	120000
1.5	2.2	6500	2.8	658.1	**BF90Z-../DSE09LA4**	608	42800	120000
1.5	1.9	7500	2.5	759.0	**BF90Z-../DSE09LA4**	608	42800	120000
1.5	1.7	8400	2.2	845.1	**BF90Z-../DSE09LA4**	608	42800	120000
1.5	1.5	7900	2.3	976.1	**BF90G50-../DSE09LA4**	620	42800	120000
1.5	1.4	8800	2.1	1043	**BF90G50-../DSE09LA4**	620	42800	120000
1.5	1.2	10300	1.8	1204	**BF90G50-../DSE09LA4**	620	42800	120000
1.5	1.0	12900	1.45	1444	**BF90G50-../DSE09LA4**	620	42800	120000
1.5	0.85	15200	1.2	1678	**BF90G50-../DSE09LA4**	620	42800	120000
1.5	0.8	16100	1.15	1867	**BF90G50-../DSE09LA4**	620	42800	120000
1.5	0.7	18400	1.0	2154	**BF90G50-../DSE09LA4**	620	42800	120000

2.2 kW

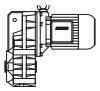

P_N	50 Hz			i	Type	m		
	n_2	M_2	f_B					
[kW]	[1/min]	[Nm]	[—]	[:1]		[kg]	[N]	[N]
2.2	255	82	1.7	5.60	**BF10-../DSE09XA4**	40	1950	-
2.2	188	111	1.4	7.58	**BF10-../DSE09XA4**	40	2200	-
2.2	147	142	1.25	9.69	**BF10-../DSE09XA4**	40	2350	-
2.2	120	175	1.05	11.84	**BF10-../DSE09XA4**	40	2500	-
2.2	95	220	0.83	15.04	**BF10-../DSE09XA4**	40	2800	-
2.2	78	265	0.91	18.23	**BF10-../DSE09XA4**	40	2900	-
2.2	71	295	0.81	20.05	**BF10-../DSE09XA4**	40	3000	-
2.2	240	87	2.3	6.04	**BF20-../DSE09XA4**	46	2550	-
2.2	178	118	1.85	8.00	**BF20-../DSE09XA4**	46	2850	-

The torques marked (*) are maximum permissible torques for service factor f_B=1.0.

2.2 kW

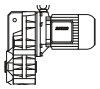

P_N	50 Hz			i	Type	m		
	n_2	M_2	f_B					
[kW]	[1/min]	[Nm]	[—]	[:1]		[kg]	[N]	[N]
2.2	136	154	1.65	10.51	**BF20-../DSE09XA4**	46	3100	-
2.2	108	194	1.45	13.18	**BF20-../DSE09XA4**	46	3300	-
2.2	92	225	1.35	15.54	**BF20-../DSE09XA4**	46	3450	-
2.2	85	245	1.5	16.77	**BF20-../DSE09XA4**	46	3500	-
2.2	77	270	1.35	18.45	**BF20-../DSE09XA4**	46	3600	-
2.2	65	320	1.25	22.04	**BF20-../DSE09XA4**	46	3800	-
2.2	59	355	1.15	24.25	**BF20-../DSE09XA4**	46	3950	-
2.2	52	400	1.05	27.62	**BF20-../DSE09XA4**	46	4150	-
2.2	47	445	0.94	30.40	**BF20-../DSE09XA4**	46	4400	-
2.2	44	475	0.88	32.58	**BF20-../DSE09XA4**	46	4450	-
2.2	40	520	0.81	35.85	**BF20-../DSE09XA4**	46	4650	-
2.2	225	93	2.8	6.34	**BF30-../DSE09XA4**	57	2400	-
2.2	176	119	2.4	8.07	**BF30-../DSE09XA4**	57	2650	-
2.2	143	146	2.2	9.99	**BF30-../DSE09XA4**	57	2850	-
2.2	110	191	1.9	12.91	**BF30-../DSE09XA4**	57	3050	-
2.2	89	235	1.75	16.00	**BF30-../DSE09XA4**	57	3250	-
2.2	81	255	1.9	17.65	**BF30-../DSE09XA4**	57	3300	-
2.2	74	280	1.8	19.41	**BF30-../DSE09XA4**	57	3400	-
2.2	65	320	1.65	21.85	**BF30-../DSE09XA4**	57	3500	-
2.2	60	350	1.6	24.03	**BF30-../DSE09XA4**	57	3600	-
2.2	51	410	1.4	28.23	**BF30-../DSE09XA4**	57	3800	-
2.2	46	455	1.25	31.05	**BF30-../DSE09XA4**	57	4000	-
2.2	41	510	1.15	35.00	**BF30-../DSE09XA4**	57	4200	-
2.2	37	560	1.05	38.49	**BF30-../DSE09XA4**	57	4400	-
2.2	35	600	0.96	41.01	**BF30-../DSE09XA4**	57	4500	-
2.2	31.5	660	0.87	45.10	**BF30-../DSE09XA4**	57	4700	-
2.2	187	112	3.3	7.62	**BF40-../DSE09XA4**	66	3900	-
2.2	150	140	3.0	9.48	**BF40-../DSE09XA4**	66	4150	-
2.2	121	173	2.7	11.79	**BF40-../DSE09XA4**	66	4450	-
2.2	95	220	2.4	15.02	**BF40-../DSE09XA4**	66	4800	-
2.2	82	255	2.5	17.35	**BF40-../DSE09XA4**	66	4950	-
2.2	75	280	2.4	19.09	**BF40-../DSE09XA4**	66	5100	-
2.2	66	315	2.2	21.60	**BF40-../DSE09XA4**	66	5200	-
2.2	60	350	2.1	23.77	**BF40-../DSE09XA4**	66	5400	-
2.2	53	395	1.95	26.86	**BF40-../DSE09XA4**	66	5600	-
2.2	48.5	430	1.9	29.55	**BF40-../DSE09XA4**	66	5800	-
2.2	42	500	1.7	34.21	**BF40-../DSE09XA4**	66	6000	-
2.2	38	550	1.6	37.64	**BF40-../DSE09XA4**	66	6200	-
2.2	34.5	600	1.5	41.42	**BF40-../DSE09XA4**	66	6500	-
2.2	31.5	660	1.35	45.56	**BF40-../DSE09XA4**	66	6800	-
2.2	29.5	710	1.25	48.92	**BF40-../DSE09XA4**	66	7000	-
2.2	26.5	790	1.15	53.82	**BF40-../DSE09XA4**	66	7200	-
2.2	23.5	890	1.0	61.25	**BF40-../DSE09XA4**	66	7600	-
2.2	21.5	970	0.93	67.38	**BF40-../DSE09XA4**	66	8000	-
2.2	20	1050	0.86	71.40	**BF40-../DSE09XA4**	66	8100	-
2.2	18.5	1130	0.8	78.55	**BF40-../DSE09XA4**	66	8500	-
2.2	62	335	3.3	23.14	**BF50-../DSE09XA4**	94	6800	-
2.2	55	380	3.1	25.88	**BF50-../DSE09XA4**	94	7100	-
2.2	45	465	2.7	31.73	**BF50-../DSE09XA4**	94	7500	-
2.2	40.5	510	2.5	35.49	**BF50-../DSE09XA4**	94	7800	-
2.2	34	610	2.1	42.15	**BF50-../DSE09XA4**	94	8500	-
2.2	30.5	680	1.9	47.14	**BF50-../DSE09XA4**	94	8900	-
2.2	25	840	1.55	56.86	**BF50-../DSE09XA4**	94	9300	-
2.2	22.5	930	1.4	63.59	**BF50-../DSE09XA4**	94	9800	-
2.2	20	1050	1.25	72.72	**BF50-../DSE09XA4**	94	10700	-
2.2	17.5	1200	1.1	81.33	**BF50-../DSE09XA4**	94	11300	-
2.2	16	1310	0.99	90.24	**BF50-../DSE09XA4**	94	11800	-
2.2	14.5	1440	0.9	100.9	**BF50-../DSE09XA4**	94	12300	-
2.2	31	670	3.3	46.16	**BF60-../DSE09XA4**	124	9900	28000
2.2	26.5	790	2.9	54.44	**BF60-../DSE09XA4**	124	10500	29700
2.2	24	870	2.6	60.40	**BF60-../DSE09XA4**	124	11100	31400
2.2	20	1050	2.2	72.15	**BF60-../DSE09XA4**	124	12000	34000
2.2	18	1160	2.0	80.05	**BF60-../DSE09XA4**	124	12600	35600
2.2	15.5	1350	1.7	93.44	**BF60-../DSE09XA4**	124	13500	38200
2.2	14	1500	1.55	103.7	**BF60-../DSE09XA4**	124	14100	39900
2.2	13	1610	1.45	113.1	**BF60-../DSE09XA4**	124	14600	41300

The torques marked (*) are maximum permissible torques for service factor f_B=1.0.

2.2 kW

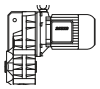

P_N	50 Hz			i	Type	m		
	n_2	M_2	f_B					
[kW]	[1/min]	[Nm]	[—]	[:1]		[kg]	[N]	[N]
2.2	11.5	1820	1.25	125.5	**BF60-../DSE09XA4**	124	15300	43300
2.2	10.5	2000	1.15	140.8	**BF60Z-../DSE09XA4**	143	15300	43300
2.2	8.4	2500	0.92	169.2	**BF60Z-../DSE09XA4**	143	15300	43300
2.2	7.6	2750	0.84	187.7	**BF60Z-../DSE09XA4**	143	15300	43300
2.2	12	1750	3.0	122.7	**BF70-../DSE09XA4**	210	16100	47700
2.2	11	1910	2.7	133.0	**BF70Z-../DSE09XA4**	231	16100	47700
2.2	9.3	2250	2.3	154.0	**BF70Z-../DSE09XA4**	231	16100	47700
2.2	8.0	2600	2.0	179.7	**BF70Z-../DSE09XA4**	231	16100	47700
2.2	7.2	2900	1.8	199.7	**BF70Z-../DSE09XA4**	231	16100	47700
2.2	6.1	3400	1.55	233.0	**BF70Z-../DSE09XA4**	231	16100	47700
2.2	5.5	3800	1.35	258.7	**BF70Z-../DSE09XA4**	231	16100	47700
2.2	4.8	4350	1.2	301.8	**BF70Z-../DSE09XA4**	231	16100	47700
2.2	4.2	5000	1.05	341.7	**BF70Z-../DSE09XA4**	231	16100	47700
2.2	3.6	5800	0.9	398.7	**BF70Z-../DSE09XA4**	231	16100	47700
2.2	3.3	6300	0.83	439.2	**BF70Z-../DSE09XA4**	231	16100	47700
2.2	6.8	3050	3.1	209.4	**BF80-../DSE09XA4**	307	34300	75000
2.2	6.0	3500	2.7	237.1	**BF80-../DSE09XA4**	307	36900	75000
2.2	5.3	3950	2.4	269.1	**BF80-../DSE09XA4**	307	39600	75000
2.2	4.9	4250	2.5	291.7	**BF80Z-../DSE09XA4**	348	39600	75000
2.2	4.1	5100	2.1	347.3	**BF80Z-../DSE09XA4**	348	39600	75000
2.2	3.7	5600	1.9	394.2	**BF80Z-../DSE09XA4**	348	39600	75000
2.2	3.2	6500	1.6	450.4	**BF80Z-../DSE09XA4**	348	39600	75000
2.2	2.8	7500	1.4	511.2	**BF80Z-../DSE09XA4**	348	39600	75000
2.2	2.5	8400	1.25	583.4	**BF80Z-../DSE09XA4**	348	39600	75000
2.2	2.2	9500	1.1	662.1	**BF80Z-../DSE09XA4**	348	39600	75000
2.2	1.9	11000	0.95	770.6	**BF80Z-../DSE09XA4**	348	39600	75000
2.2	1.7	12300	0.85	874.6	**BF80Z-../DSE09XA4**	348	39600	75000
2.2	3.2	6500	2.8	456.7	**BF90Z-../DSE09XA4**	612	42800	120000
2.2	2.8	7500	2.5	508.5	**BF90Z-../DSE09XA4**	612	42800	120000
2.2	2.5	8400	2.2	591.1	**BF90Z-../DSE09XA4**	612	42800	120000
2.2	2.2	9500	1.95	658.1	**BF90Z-../DSE09XA4**	612	42800	120000
2.2	1.9	11000	1.7	759.0	**BF90Z-../DSE09XA4**	612	42800	120000
2.2	1.7	12300	1.5	845.1	**BF90Z-../DSE09XA4**	612	42800	120000
2.2	1.5	12400	1.5	976.1	**BF90G50-../DSE09XA4**	624	42800	120000
2.2	1.4	13600	1.35	1043	**BF90G50-../DSE09XA4**	624	42800	120000
2.2	1.2	15900	1.15	1204	**BF90G50-../DSE09XA4**	624	42800	120000
2.2	1.0	19600	0.94	1444	**BF90G50-../DSE09XA4**	624	42800	120000

3 kW

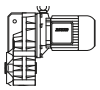

P_N	50 Hz			i	Type	m		
	n_2	M_2	f_B					
[kW]	[1/min]	[Nm]	[—]	[:1]		[kg]	[N]	[N]
3	225	127	2.1	6.34	**BF30-../DSE11SA4**	66	2400	-
3	176	162	1.75	8.07	**BF30-../DSE11SA4**	66	2650	-
3	143	200	1.6	9.99	**BF30-../DSE11SA4**	66	2850	-
3	110	260	1.4	12.91	**BF30-../DSE11SA4**	66	3050	-
3	89	320	1.3	16.00	**BF30-../DSE11SA4**	66	3250	-
3	81	350	1.35	17.65	**BF30-../DSE11SA4**	66	3300	-
3	74	385	1.3	19.41	**BF30-../DSE11SA4**	66	3400	-
3	65	440	1.2	21.85	**BF30-../DSE11SA4**	66	3500	-
3	60	475	1.15	24.03	**BF30-../DSE11SA4**	66	3600	-
3	51	560	1.05	28.23	**BF30-../DSE11SA4**	66	3800	-
3	46	620	0.93	31.05	**BF30-../DSE11SA4**	66	4000	-
3	41	690	0.83	35.00	**BF30-../DSE11SA4**	66	4200	-
3	245	116	2.9	5.87	**BF40-../DSE11SA4**	80	3550	-
3	187	153	2.4	7.62	**BF40-../DSE11SA4**	80	3900	-
3	150	191	2.2	9.48	**BF40-../DSE11SA4**	80	4150	-
3	121	235	2.0	11.79	**BF40-../DSE11SA4**	80	4450	-
3	95	300	1.75	15.02	**BF40-../DSE11SA4**	80	4800	-
3	82	345	1.85	17.35	**BF40-../DSE11SA4**	80	4950	-
3	75	380	1.75	19.09	**BF40-../DSE11SA4**	80	5100	-

The torques marked (*) are maximum permissible torques for service factor f_B=1.0.

3 kW

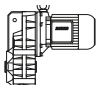

P_N	50 Hz			i	Type	m		
	n_2	M_2	f_B					
[kW]	[1/min]	[Nm]	[—]	[:1]		[kg]	[N]	[N]
3	66	430	1.65	21.60	**BF40-../DSE11SA4**	80	5200	-
3	60	475	1.55	23.77	**BF40-../DSE11SA4**	80	5400	-
3	53	540	1.45	26.86	**BF40-../DSE11SA4**	80	5600	-
3	48.5	590	1.35	29.55	**BF40-../DSE11SA4**	80	5800	-
3	42	680	1.25	34.21	**BF40-../DSE11SA4**	80	6000	-
3	38	750	1.2	37.64	**BF40-../DSE11SA4**	80	6200	-
3	34.5	830	1.1	41.42	**BF40-../DSE11SA4**	80	6500	-
3	31.5	900	1.0	45.56	**BF40-../DSE11SA4**	80	6800	-
3	29.5	970	0.93	48.92	**BF40-../DSE11SA4**	80	7000	-
3	26.5	1080	0.83	53.82	**BF40-../DSE11SA4**	80	7200	-
3	133	215	3.1	10.68	**BF50-../DSE11SA4**	110	5600	-
3	97	295	2.7	14.65	**BF50-../DSE11SA4**	110	6100	-
3	86	330	2.9	16.70	**BF50-../DSE11SA4**	110	6200	-
3	77	370	2.7	18.68	**BF50-../DSE11SA4**	110	6400	-
3	62	460	2.4	23.14	**BF50-../DSE11SA4**	110	6800	-
3	55	520	2.2	25.88	**BF50-../DSE11SA4**	110	7100	-
3	45	630	2.0	31.73	**BF50-../DSE11SA4**	110	7500	-
3	40.5	700	1.85	35.49	**BF50-../DSE11SA4**	110	7800	-
3	34	840	1.55	42.15	**BF50-../DSE11SA4**	110	8500	-
3	30.5	930	1.4	47.14	**BF50-../DSE11SA4**	110	8900	-
3	25	1140	1.15	56.86	**BF50-../DSE11SA4**	110	9300	-
3	22.5	1270	1.0	63.59	**BF50-../DSE11SA4**	110	9800	-
3	20	1430	0.91	72.72	**BF50-../DSE11SA4**	110	10700	-
3	17.5	1630	0.8	81.33	**BF50-../DSE11SA4**	110	11300	-
3	46	620	3.1	31.20	**BF60-../DSE11SA4**	141	8800	24900
3	41.5	690	2.9	34.62	**BF60-../DSE11SA4**	141	9100	25700
3	34.5	830	2.6	41.60	**BF60-../DSE11SA4**	141	9600	27100
3	31	920	2.4	46.16	**BF60-../DSE11SA4**	141	9900	28000
3	26.5	1080	2.1	54.44	**BF60-../DSE11SA4**	141	10500	29700
3	24	1190	1.95	60.40	**BF60-../DSE11SA4**	141	11100	31400
3	20	1430	1.6	72.15	**BF60-../DSE11SA4**	141	12000	34000
3	18	1590	1.45	80.05	**BF60-../DSE11SA4**	141	12600	35600
3	15.5	1840	1.25	93.44	**BF60-../DSE11SA4**	141	13500	38200
3	14	2000	1.15	103.7	**BF60-../DSE11SA4**	141	14100	39900
3	13	2200	1.05	113.1	**BF60-../DSE11SA4**	141	14600	41300
3	11.5	2450	0.94	125.5	**BF60-../DSE11SA4**	141	15300	43300
3	10.5	2700	0.85	140.8	**BF60Z-../DSE11SA4**	157	15300	43300
3	17.5	1630	3.2	81.82	**BF70-../DSE11SA4**	220	12800	41300
3	15	1910	2.7	95.46	**BF70-../DSE11SA4**	220	14000	43700
3	13.5	2100	2.5	105.2	**BF70-../DSE11SA4**	220	14700	45100
3	12	2350	2.2	122.7	**BF70-../DSE11SA4**	220	16100	47700
3	11	2600	2.0	133.0	**BF70Z-../DSE11SA4**	247	16100	47700
3	9.3	3050	1.7	154.0	**BF70Z-../DSE11SA4**	247	16100	47700
3	8.0	3550	1.45	179.7	**BF70Z-../DSE11SA4**	247	16100	47700
3	7.2	3950	1.3	199.7	**BF70Z-../DSE11SA4**	247	16100	47700
3	6.1	4650	1.1	233.0	**BF70Z-../DSE11SA4**	247	16100	47700
3	5.5	5200	1.0	258.7	**BF70Z-../DSE11SA4**	247	16100	47700
3	4.8	5900	0.88	301.8	**BF70Z-../DSE11SA4**	247	16100	47700
3	9.0	3150	3.0	158.5	**BF80-../DSE11SA4**	316	29000	75000
3	7.7	3700	2.6	184.5	**BF80-../DSE11SA4**	316	31800	75000
3	6.8	4200	2.3	209.4	**BF80-../DSE11SA4**	316	34300	75000
3	6.0	4750	2.0	237.1	**BF80-../DSE11SA4**	316	36900	75000
3	5.3	5400	1.75	269.1	**BF80-../DSE11SA4**	316	39600	75000
3	4.9	5800	1.8	291.7	**BF80Z-../DSE11SA4**	363	39600	75000
3	4.1	6900	1.5	347.3	**BF80Z-../DSE11SA4**	363	39600	75000
3	3.7	7700	1.35	394.2	**BF80Z-../DSE11SA4**	363	39600	75000
3	3.2	8900	1.2	450.4	**BF80Z-../DSE11SA4**	363	39600	75000
3	2.8	10200	1.05	511.2	**BF80Z-../DSE11SA4**	363	39600	75000
3	2.5	11400	0.92	583.4	**BF80Z-../DSE11SA4**	363	39600	75000
3	2.2	13000	0.81	662.1	**BF80Z-../DSE11SA4**	363	39600	75000
3	5.5	5200	3.2	259.0	**BF90-../DSE11SA4**	569	42800	120000
3	4.8	5900	3.1	300.4	**BF90Z-../DSE11SA4**	629	42800	120000
3	4.2	6800	2.7	343.6	**BF90Z-../DSE11SA4**	629	42800	120000
3	3.8	7500	2.5	382.6	**BF90Z-../DSE11SA4**	629	42800	120000
3	3.2	8900	2.1	456.7	**BF90Z-../DSE11SA4**	629	42800	120000

The torques marked (*) are maximum permissible torques for service factor f_B=1.0.

3 kW

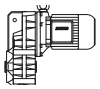

P_N	50 Hz			i	Type	m		
	n_2	M_2	f_B					
[kW]	[1/min]	[Nm]	[—]	[:1]		[kg]	[N]	[N]
3	2.8	10200	1.8	508.5	**BF90Z-../DSE11SA4**	629	42800	120000
3	2.5	11400	1.6	591.1	**BF90Z-../DSE11SA4**	629	42800	120000
3	2.2	13000	1.4	658.1	**BF90Z-../DSE11SA4**	629	42800	120000
3	1.9	15000	1.25	759.0	**BF90Z-../DSE11SA4**	629	42800	120000
3	1.7	16800	1.1	845.1	**BF90Z-../DSE11SA4**	629	42800	120000
3	1.5	17500	1.05	976.1	**BF90G50-../DSE11SA4**	639	42800	120000
3	1.4	19000	0.97	1043	**BF90G50-../DSE11SA4**	639	42800	120000
3	1.2	22200	0.83	1204	**BF90G50-../DSE11SA4**	639	42800	120000

4 kW

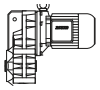

P_N	50 Hz			i	Type	m		
	n_2	M_2	f_B					
[kW]	[1/min]	[Nm]	[—]	[:1]		[kg]	[N]	[N]
4	225	169	1.55	6.34	**BF30-../DSE11MA4**	66	2400	-
4	176	215	1.35	8.07	**BF30-../DSE11MA4**	66	2650	-
4	143	265	1.2	9.99	**BF30-../DSE11MA4**	66	2850	-
4	110	345	1.05	12.91	**BF30-../DSE11MA4**	66	3050	-
4	89	425	0.96	16.00	**BF30-../DSE11MA4**	66	3250	-
4	81	470	1.0	17.65	**BF30-../DSE11MA4**	66	3300	-
4	74	510	0.98	19.41	**BF30-../DSE11MA4**	66	3400	-
4	65	580	0.91	21.85	**BF30-../DSE11MA4**	66	3500	-
4	60	630	0.88	24.03	**BF30-../DSE11MA4**	66	3600	-
4	245	155	2.2	5.87	**BF40-../DSE11MA4**	80	3550	-
4	187	200	1.85	7.62	**BF40-../DSE11MA4**	80	3900	-
4	150	250	1.65	9.48	**BF40-../DSE11MA4**	80	4150	-
4	121	315	1.5	11.79	**BF40-../DSE11MA4**	80	4450	-
4	95	400	1.3	15.02	**BF40-../DSE11MA4**	80	4800	-
4	82	465	1.35	17.35	**BF40-../DSE11MA4**	80	4950	-
4	75	500	1.35	19.09	**BF40-../DSE11MA4**	80	5100	-
4	66	570	1.25	21.60	**BF40-../DSE11MA4**	80	5200	-
4	60	630	1.15	23.77	**BF40-../DSE11MA4**	80	5400	-
4	53	720	1.1	26.86	**BF40-../DSE11MA4**	80	5600	-
4	48.5	780	1.05	29.55	**BF40-../DSE11MA4**	80	5800	-
4	42	900	0.95	34.21	**BF40-../DSE11MA4**	80	6000	-
4	38	1000	0.89	37.64	**BF40-../DSE11MA4**	80	6200	-
4	34.5	1100	0.82	41.42	**BF40-../DSE11MA4**	80	6500	-
4	185	205	2.8	7.71	**BF50-../DSE11MA4**	110	5100	-
4	133	285	2.4	10.68	**BF50-../DSE11MA4**	110	5600	-
4	97	390	2.0	14.65	**BF50-../DSE11MA4**	110	6100	-
4	86	440	2.2	16.70	**BF50-../DSE11MA4**	110	6200	-
4	77	495	2.0	18.68	**BF50-../DSE11MA4**	110	6400	-
4	62	610	1.8	23.14	**BF50-../DSE11MA4**	110	6800	-
4	55	690	1.7	25.88	**BF50-../DSE11MA4**	110	7100	-
4	45	840	1.5	31.73	**BF50-../DSE11MA4**	110	7500	-
4	40.5	940	1.4	35.49	**BF50-../DSE11MA4**	110	7800	-
4	34	1120	1.15	42.15	**BF50-../DSE11MA4**	110	8500	-
4	30.5	1250	1.05	47.14	**BF50-../DSE11MA4**	110	8900	-
4	25	1520	0.86	56.86	**BF50-../DSE11MA4**	110	9300	-
4	100	380	3.1	14.24	**BF60-../DSE11MA4**	141	7100	20000
4	84	450	3.2	16.96	**BF60-../DSE11MA4**	141	7300	20600
4	76	500	3.0	18.81	**BF60-../DSE11MA4**	141	7600	21500
4	63	600	2.8	22.58	**BF60-../DSE11MA4**	141	8000	22600
4	57	670	2.6	25.05	**BF60-../DSE11MA4**	141	8200	23200
4	46	830	2.3	31.20	**BF60-../DSE11MA4**	141	8800	24900
4	41.5	920	2.2	34.62	**BF60-../DSE11MA4**	141	9100	25700
4	34.5	1100	1.95	41.60	**BF60-../DSE11MA4**	141	9600	27100
4	31	1230	1.8	46.16	**BF60-../DSE11MA4**	141	9900	28000
4	26.5	1440	1.6	54.44	**BF60-../DSE11MA4**	141	10500	29700
4	24	1590	1.45	60.40	**BF60-../DSE11MA4**	141	11100	31400
4	20	1910	1.2	72.15	**BF60-../DSE11MA4**	141	12000	34000
4	18	2100	1.1	80.05	**BF60-../DSE11MA4**	141	12600	35600
4	15.5	2450	0.94	93.44	**BF60-../DSE11MA4**	141	13500	38200

The torques marked (*) are maximum permissible torques for service factor f_B=1.0.

4 kW

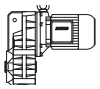

P_N	50 Hz			i	Type	m		
	n_2	M_2	f_B					
[kW]	[1/min]	[Nm]	[—]	[:1]		[kg]	[N]	[N]
4	14	2700	0.85	103.7	**BF60-../DSE11MA4**	141	14100	39900
4	23	1660	3.1	61.94	**BF70-../DSE11MA4**	220	10800	37400
4	20	1910	2.7	72.26	**BF70-../DSE11MA4**	220	12000	39600
4	17.5	2150	2.4	81.82	**BF70-../DSE11MA4**	220	12800	41300
4	15	2500	2.1	95.46	**BF70-../DSE11MA4**	220	14000	43700
4	13.5	2800	1.85	105.2	**BF70-../DSE11MA4**	220	14700	45100
4	12	3150	1.65	122.7	**BF70-../DSE11MA4**	220	16100	47700
4	11	3450	1.5	133.0	**BF70Z-../DSE11MA4**	247	16100	47700
4	9.3	4100	1.25	154.0	**BF70Z-../DSE11MA4**	247	16100	47700
4	8.0	4750	1.1	179.7	**BF70Z-../DSE11MA4**	247	16100	47700
4	7.2	5300	0.98	199.7	**BF70Z-../DSE11MA4**	247	16100	47700
4	6.1	6200	0.84	233.0	**BF70Z-../DSE11MA4**	247	16100	47700
4	12	3150	3.0	122.4	**BF80-../DSE11MA4**	316	24500	75000
4	10.5	3600	2.6	139.7	**BF80-../DSE11MA4**	316	26700	75000
4	9.0	4200	2.3	158.5	**BF80-../DSE11MA4**	316	29000	75000
4	7.7	4950	1.9	184.5	**BF80-../DSE11MA4**	316	31800	75000
4	6.8	5600	1.7	209.4	**BF80-../DSE11MA4**	316	34300	75000
4	6.0	6300	1.5	237.1	**BF80-../DSE11MA4**	316	36900	75000
4	5.3	7200	1.3	269.1	**BF80-../DSE11MA4**	316	39600	75000
4	4.9	7700	1.35	291.7	**BF80Z-../DSE11MA4**	363	39600	75000
4	4.1	9300	1.15	347.3	**BF80Z-../DSE11MA4**	363	39600	75000
4	3.7	10300	1.0	394.2	**BF80Z-../DSE11MA4**	363	39600	75000
4	3.2	11900	0.88	450.4	**BF80Z-../DSE11MA4**	363	39600	75000
4	7.2	5300	3.2	198.8	**BF90-../DSE11MA4**	569	36000	111300
4	6.2	6100	2.8	232.6	**BF90-../DSE11MA4**	569	39900	118300
4	5.5	6900	2.4	259.0	**BF90-../DSE11MA4**	569	42800	120000
4	5.3	7200	2.6	269.8	**BF90Z-../DSE11MA4**	629	42800	120000
4	4.8	7900	2.3	300.4	**BF90Z-../DSE11MA4**	629	42800	120000
4	4.2	9000	2.1	343.6	**BF90Z-../DSE11MA4**	629	42800	120000
4	3.8	10000	1.85	382.6	**BF90Z-../DSE11MA4**	629	42800	120000
4	3.2	11900	1.55	456.7	**BF90Z-../DSE11MA4**	629	42800	120000
4	2.8	13600	1.35	508.5	**BF90Z-../DSE11MA4**	629	42800	120000
4	2.5	15200	1.2	591.1	**BF90Z-../DSE11MA4**	629	42800	120000
4	2.2	17300	1.05	658.1	**BF90Z-../DSE11MA4**	629	42800	120000
4	1.9	20100	0.92	759.0	**BF90Z-../DSE11MA4**	629	42800	120000
4	1.7	22400	0.83	845.1	**BF90Z-../DSE11MA4**	629	42800	120000

5.5 kW

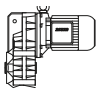

P_N	50 Hz			i	Type	m		
	n_2	M_2	f_B					
[kW]	[1/min]	[Nm]	[—]	[:1]		[kg]	[N]	[N]
5.5	225	230	1.15	6.34	**BF30-../DSE11LA4**	78	2400	-
5.5	176	295	0.97	8.07	**BF30-../DSE11LA4**	78	2650	-
5.5	143	365	0.88	9.99	**BF30-../DSE11LA4**	78	2850	-
5.5	245	210	1.6	5.87	**BF40-../DSE11LA4**	92	3550	-
5.5	187	280	1.3	7.62	**BF40-../DSE11LA4**	92	3900	-
5.5	150	350	1.2	9.48	**BF40-../DSE11LA4**	92	4150	-
5.5	121	430	1.1	11.79	**BF40-../DSE11LA4**	92	4450	-
5.5	95	550	0.95	15.02	**BF40-../DSE11LA4**	92	4800	-
5.5	82	640	0.99	17.35	**BF40-../DSE11LA4**	92	4950	-
5.5	75	700	0.95	19.09	**BF40-../DSE11LA4**	92	5100	-
5.5	66	790	0.89	21.60	**BF40-../DSE11LA4**	92	5200	-
5.5	60	870	0.85	23.77	**BF40-../DSE11LA4**	92	5400	-
5.5	265	198	2.5	5.38	**BF50-../DSE11LA4**	122	4500	-
5.5	185	280	2.0	7.71	**BF50-../DSE11LA4**	122	5100	-
5.5	133	390	1.75	10.68	**BF50-../DSE11LA4**	122	5600	-
5.5	97	540	1.45	14.65	**BF50-../DSE11LA4**	122	6100	-
5.5	86	610	1.55	16.70	**BF50-../DSE11LA4**	122	6200	-
5.5	77	680	1.5	18.68	**BF50-../DSE11LA4**	122	6400	-
5.5	62	840	1.3	23.14	**BF50-../DSE11LA4**	122	6800	-

The torques marked (*) are maximum permissible torques for service factor f_B=1.0.

5.5 kW

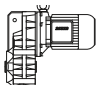

P_N	50 Hz			i	Type	m		
	n_2	M_2	f_B					
[kW]	[1/min]	[Nm]	[—]	[:1]		[kg]	[N]	[N]
5.5	55	950	1.25	25.88	**BF50-../DSE11LA4**	122	7100	-
5.5	45	1160	1.1	31.73	**BF50-../DSE11LA4**	122	7500	-
5.5	40.5	1290	1.0	35.49	**BF50-../DSE11LA4**	122	7800	-
5.5	34	1540	0.84	42.15	**BF50-../DSE11LA4**	122	8500	-
5.5	184	285	3.0	7.74	**BF60-../DSE11LA4**	153	6000	16900
5.5	138	380	2.7	10.31	**BF60-../DSE11LA4**	153	6500	18400
5.5	100	520	2.3	14.24	**BF60-../DSE11LA4**	153	7100	20000
5.5	84	620	2.3	16.96	**BF60-../DSE11LA4**	153	7300	20600
5.5	76	690	2.2	18.81	**BF60-../DSE11LA4**	153	7600	21500
5.5	63	830	2.0	22.58	**BF60-../DSE11LA4**	153	8000	22600
5.5	57	920	1.9	25.05	**BF60-../DSE11LA4**	153	8200	23200
5.5	46	1140	1.65	31.20	**BF60-../DSE11LA4**	153	8800	24900
5.5	41.5	1260	1.6	34.62	**BF60-../DSE11LA4**	153	9100	25700
5.5	34.5	1520	1.4	41.60	**BF60-../DSE11LA4**	153	9600	27100
5.5	31	1690	1.3	46.16	**BF60-../DSE11LA4**	153	9900	28000
5.5	26.5	1980	1.15	54.44	**BF60-../DSE11LA4**	153	10500	29700
5.5	24	2150	1.05	60.40	**BF60-../DSE11LA4**	153	11100	31400
5.5	20	2600	0.88	72.15	**BF60-../DSE11LA4**	153	12000	34000
5.5	33.5	1560	3.3	43.02	**BF70-../DSE11LA4**	232	8700	32800
5.5	30	1750	3.0	47.82	**BF70-../DSE11LA4**	232	9100	34000
5.5	25.5	2050	2.5	55.79	**BF70-../DSE11LA4**	232	10200	36000
5.5	23	2250	2.3	61.94	**BF70-../DSE11LA4**	232	10800	37400
5.5	20	2600	2.0	72.26	**BF70-../DSE11LA4**	232	12000	39600
5.5	17.5	3000	1.75	81.82	**BF70-../DSE11LA4**	232	12800	41300
5.5	15	3500	1.5	95.46	**BF70-../DSE11LA4**	232	14000	43700
5.5	13.5	3850	1.35	105.2	**BF70-../DSE11LA4**	232	14700	45100
5.5	12	4350	1.2	122.7	**BF70-../DSE11LA4**	232	16100	47700
5.5	11	4750	1.1	133.0	**BF70Z-../DSE11LA4**	258	16100	47700
5.5	9.3	5600	0.93	154.0	**BF70Z-../DSE11LA4**	258	16100	47700
5.5	8.0	6500	0.8	179.7	**BF70Z-../DSE11LA4**	258	16100	47700
5.5	17.5	3000	3.2	83.16	**BF80-../DSE11LA4**	328	18400	65100
5.5	15.5	3350	2.8	94.38	**BF80-../DSE11LA4**	328	20300	68500
5.5	13.5	3850	2.5	107.9	**BF80-../DSE11LA4**	328	22400	72300
5.5	12	4350	2.2	122.4	**BF80-../DSE11LA4**	328	24500	75000
5.5	10.5	5000	1.9	139.7	**BF80-../DSE11LA4**	328	26700	75000
5.5	9.0	5800	1.65	158.5	**BF80-../DSE11LA4**	328	29000	75000
5.5	7.7	6800	1.4	184.5	**BF80-../DSE11LA4**	328	31800	75000
5.5	6.8	7700	1.25	209.4	**BF80-../DSE11LA4**	328	34300	75000
5.5	6.0	8700	1.1	237.1	**BF80-../DSE11LA4**	328	36900	75000
5.5	5.3	9900	0.96	269.1	**BF80-../DSE11LA4**	328	39600	75000
5.5	4.9	10700	0.98	291.7	**BF80Z-../DSE11LA4**	375	39600	75000
5.5	4.1	12800	0.82	347.3	**BF80Z-../DSE11LA4**	375	39600	75000
5.5	9.2	5700	2.9	154.8	**BF90-../DSE11LA4**	581	30100	100800
5.5	8.0	6500	2.6	178.6	**BF90-../DSE11LA4**	581	33400	106700
5.5	7.2	7200	2.3	198.8	**BF90-../DSE11LA4**	581	36000	111300
5.5	6.2	8400	2.0	232.6	**BF90-../DSE11LA4**	581	39900	118300
5.5	5.5	9500	1.75	259.0	**BF90-../DSE11LA4**	581	42800	120000
5.5	5.3	9900	1.85	269.8	**BF90Z-../DSE11LA4**	641	42800	120000
5.5	4.8	10900	1.7	300.4	**BF90Z-../DSE11LA4**	641	42800	120000
5.5	4.2	12500	1.5	343.6	**BF90Z-../DSE11LA4**	641	42800	120000
5.5	3.8	13800	1.35	382.6	**BF90Z-../DSE11LA4**	641	42800	120000
5.5	3.2	16400	1.15	456.7	**BF90Z-../DSE11LA4**	641	42800	120000
5.5	2.8	18700	0.99	508.5	**BF90Z-../DSE11LA4**	641	42800	120000
5.5	2.5	21000	0.88	591.1	**BF90Z-../DSE11LA4**	641	42800	120000

7.5 kW

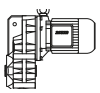

P_N	50 Hz			i	Type	m		
	n_2	M_2	f_B					
[kW]	[1/min]	[Nm]	[—]	[:1]		[kg]	[N]	[N]
7.5	270	265	1.9	5.38	**BF50-../DSE13MA4**	133	4500	-
7.5	187	380	1.5	7.71	**BF50-../DSE13MA4**	133	5100	-

The torques marked (*) are maximum permissible torques for service factor f_B=1.0.

7.5 kW

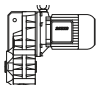

P_N	50 Hz			i	Type	m		
	n_2	M_2	f_B					
[kW]	[1/min]	[Nm]	[—]	[:1]		[kg]	[N]	[N]
7.5	135	530	1.3	10.68	**BF50-../DSE13MA4**	133	5600	-
7.5	99	720	1.1	14.65	**BF50-../DSE13MA4**	133	6100	-
7.5	87	820	1.15	16.70	**BF50-../DSE13MA4**	133	6200	-
7.5	78	910	1.1	18.68	**BF50-../DSE13MA4**	133	6400	-
7.5	63	1130	0.98	23.14	**BF50-../DSE13MA4**	133	6800	-
7.5	56	1270	0.92	25.88	**BF50-../DSE13MA4**	133	7100	-
7.5	45.5	1570	0.81	31.73	**BF50-../DSE13MA4**	133	7500	-
7.5	280	255	3.0	5.22	**BF60-../DSE13MA4**	166	5200	14800
7.5	187	380	2.3	7.74	**BF60-../DSE13MA4**	166	6000	16900
7.5	140	510	2.0	10.31	**BF60-../DSE13MA4**	166	6500	18400
7.5	102	700	1.7	14.24	**BF60-../DSE13MA4**	166	7100	20000
7.5	85	840	1.75	16.96	**BF60-../DSE13MA4**	166	7300	20600
7.5	77	930	1.65	18.81	**BF60-../DSE13MA4**	166	7600	21500
7.5	64	1110	1.5	22.58	**BF60-../DSE13MA4**	166	8000	22600
7.5	58	1230	1.4	25.05	**BF60-../DSE13MA4**	166	8200	23200
7.5	46.5	1540	1.25	31.20	**BF60-../DSE13MA4**	166	8800	24900
7.5	42	1700	1.15	34.62	**BF60-../DSE13MA4**	166	9100	25700
7.5	35	2000	1.05	41.60	**BF60-../DSE13MA4**	166	9600	27100
7.5	31.5	2250	0.99	46.16	**BF60-../DSE13MA4**	166	9900	28000
7.5	26.5	2700	0.85	54.44	**BF60-../DSE13MA4**	166	10500	29700
7.5	45.5	1570	3.3	31.84	**BF70-../DSE13MA4**	245	7700	30000
7.5	39.5	1810	2.9	36.88	**BF70-../DSE13MA4**	245	7900	31100
7.5	33.5	2100	2.5	43.02	**BF70-../DSE13MA4**	245	8700	32800
7.5	30.5	2300	2.3	47.82	**BF70-../DSE13MA4**	245	9100	34000
7.5	26	2750	1.9	55.79	**BF70-../DSE13MA4**	245	10200	36000
7.5	23.5	3000	1.75	61.94	**BF70-../DSE13MA4**	245	10800	37400
7.5	20	3550	1.45	72.26	**BF70-../DSE13MA4**	245	12000	39600
7.5	18	3950	1.3	81.82	**BF70-../DSE13MA4**	245	12800	41300
7.5	15.5	4600	1.15	95.46	**BF70-../DSE13MA4**	245	14000	43700
7.5	14	5100	1.0	105.2	**BF70-../DSE13MA4**	245	14700	45100
7.5	12	5900	0.88	122.7	**BF70-../DSE13MA4**	245	16100	47700
7.5	11	6500	0.8	133.0	**BF70Z-../DSE13MA4**	270	16100	47700
7.5	23.5	3000	3.1	61.55	**BF80-../DSE13MA4**	341	14800	58100
7.5	21	3400	2.8	69.86	**BF80-../DSE13MA4**	341	15900	60600
7.5	17.5	4050	2.3	83.16	**BF80-../DSE13MA4**	341	18400	65100
7.5	15.5	4600	2.1	94.38	**BF80-../DSE13MA4**	341	20300	68500
7.5	13.5	5300	1.8	107.9	**BF80-../DSE13MA4**	341	22400	72300
7.5	12	5900	1.6	122.4	**BF80-../DSE13MA4**	341	24500	75000
7.5	10.5	6800	1.4	139.7	**BF80-../DSE13MA4**	341	26700	75000
7.5	9.1	7800	1.2	158.5	**BF80-../DSE13MA4**	341	29000	75000
7.5	7.9	9000	1.05	184.5	**BF80-../DSE13MA4**	341	31800	75000
7.5	6.9	10300	0.92	209.4	**BF80-../DSE13MA4**	341	34300	75000
7.5	6.1	11700	0.81	237.1	**BF80-../DSE13MA4**	341	36900	75000
7.5	13.5	5300	3.2	107.5	**BF90-../DSE13MA4**	593	22300	86900
7.5	12.5	5700	2.9	119.7	**BF90-../DSE13MA4**	593	24500	90800
7.5	10.5	6800	2.5	139.1	**BF90-../DSE13MA4**	593	27700	96300
7.5	9.4	7600	2.2	154.8	**BF90-../DSE13MA4**	593	30100	100800
7.5	8.1	8800	1.9	178.6	**BF90-../DSE13MA4**	593	33400	106700
7.5	7.3	9800	1.7	198.8	**BF90-../DSE13MA4**	593	36000	111300
7.5	6.2	11500	1.45	232.6	**BF90-../DSE13MA4**	593	39900	118300
7.5	5.6	12700	1.3	259.0	**BF90-../DSE13MA4**	593	42800	120000
7.5	5.4	13200	1.4	269.8	**BF90Z-../DSE13MA4**	654	42800	120000
7.5	4.8	14900	1.25	300.4	**BF90Z-../DSE13MA4**	654	42800	120000
7.5	4.2	17000	1.1	343.6	**BF90Z-../DSE13MA4**	654	42800	120000
7.5	3.8	18800	0.98	382.6	**BF90Z-../DSE13MA4**	654	42800	120000
7.5	3.2	22300	0.83	456.7	**BF90Z-../DSE13MA4**	654	42800	120000

The torques marked (*) are maximum permissible torques for service factor f_B=1.0.

9.5 kW

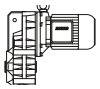

P_N	50 Hz			i	Type	m		
	n_2	M_2	f_B					
[kW]	[1/min]	[Nm]	[—]	[:1]		[kg]	[N]	[N]
9.5	270	335	1.5	5.38	**BF50-../DSE13LA4**	136	4500	-
9.5	187	485	1.15	7.71	**BF50-../DSE13LA4**	136	5100	-
9.5	135	670	1.0	10.68	**BF50-../DSE13LA4**	136	5600	-
9.5	99	910	0.87	14.65	**BF50-../DSE13LA4**	136	6100	-
9.5	87	1040	0.91	16.70	**BF50-../DSE13LA4**	136	6200	-
9.5	78	1160	0.86	18.68	**BF50-../DSE13LA4**	136	6400	-
9.5	280	320	2.4	5.22	**BF60-../DSE13LA4**	169	5200	14800
9.5	187	485	1.8	7.74	**BF60-../DSE13LA4**	169	6000	16900
9.5	140	640	1.6	10.31	**BF60-../DSE13LA4**	169	6500	18400
9.5	102	880	1.35	14.24	**BF60-../DSE13LA4**	169	7100	20000
9.5	85	1060	1.35	16.96	**BF60-../DSE13LA4**	169	7300	20600
9.5	77	1170	1.3	18.81	**BF60-../DSE13LA4**	169	7600	21500
9.5	64	1410	1.15	22.58	**BF60-../DSE13LA4**	169	8000	22600
9.5	58	1560	1.1	25.05	**BF60-../DSE13LA4**	169	8200	23200
9.5	46.5	1950	0.97	31.20	**BF60-../DSE13LA4**	169	8800	24900
9.5	42	2150	0.92	34.62	**BF60-../DSE13LA4**	169	9100	25700
9.5	35	2550	0.84	41.60	**BF60-../DSE13LA4**	169	9600	27100
9.5	59	1530	3.3	24.55	**BF70-../DSE13LA4**	248	7000	27700
9.5	53	1710	3.0	27.29	**BF70-../DSE13LA4**	248	7000	28400
9.5	45.5	1990	2.6	31.84	**BF70-../DSE13LA4**	248	7700	30000
9.5	39.5	2250	2.3	36.88	**BF70-../DSE13LA4**	248	7900	31100
9.5	33.5	2700	1.95	43.02	**BF70-../DSE13LA4**	248	8700	32800
9.5	30.5	2950	1.75	47.82	**BF70-../DSE13LA4**	248	9100	34000
9.5	26	3450	1.5	55.79	**BF70-../DSE13LA4**	248	10200	36000
9.5	23.5	3850	1.35	61.94	**BF70-../DSE13LA4**	248	10800	37400
9.5	20	4500	1.15	72.26	**BF70-../DSE13LA4**	248	12000	39600
9.5	18	5000	1.05	81.82	**BF70-../DSE13LA4**	248	12800	41300
9.5	15.5	5800	0.9	95.46	**BF70-../DSE13LA4**	248	14000	43700
9.5	14	6400	0.81	105.2	**BF70-../DSE13LA4**	248	14700	45100
9.5	30.5	2950	2.9	47.46	**BF80-../DSE13LA4**	344	13400	53700
9.5	27	3350	2.7	53.86	**BF80-../DSE13LA4**	344	14000	55800
9.5	23.5	3850	2.4	61.55	**BF80-../DSE13LA4**	344	14800	58100
9.5	21	4300	2.2	69.86	**BF80-../DSE13LA4**	344	15900	60600
9.5	17.5	5100	1.85	83.16	**BF80-../DSE13LA4**	344	18400	65100
9.5	15.5	5800	1.65	94.38	**BF80-../DSE13LA4**	344	20300	68500
9.5	13.5	6700	1.4	107.9	**BF80-../DSE13LA4**	344	22400	72300
9.5	12	7500	1.25	122.4	**BF80-../DSE13LA4**	344	24500	75000
9.5	10.5	8600	1.1	139.7	**BF80-../DSE13LA4**	344	26700	75000
9.5	9.1	9900	0.96	158.5	**BF80-../DSE13LA4**	344	29000	75000
9.5	7.9	11400	0.83	184.5	**BF80-../DSE13LA4**	344	31800	75000
9.5	18	5000	3.3	80.85	**BF90-../DSE13LA4**	596	17500	77500
9.5	16	5600	3.0	90.02	**BF90-../DSE13LA4**	596	18900	80600
9.5	13.5	6700	2.5	107.5	**BF90-../DSE13LA4**	596	22300	86900
9.5	12.5	7200	2.3	119.7	**BF90-../DSE13LA4**	596	24500	90800
9.5	10.5	8600	1.95	139.1	**BF90-../DSE13LA4**	596	27700	96300
9.5	9.4	9600	1.75	154.8	**BF90-../DSE13LA4**	596	30100	100800
9.5	8.1	11200	1.5	178.6	**BF90-../DSE13LA4**	596	33400	106700
9.5	7.3	12400	1.35	198.8	**BF90-../DSE13LA4**	596	36000	111300
9.5	6.2	14600	1.15	232.6	**BF90-../DSE13LA4**	596	39900	118300
9.5	5.6	16200	1.05	259.0	**BF90-../DSE13LA4**	596	42800	120000
9.5	5.4	16800	1.1	269.8	**BF90Z-../DSE13LA4**	657	42800	120000
9.5	4.8	18900	0.98	300.4	**BF90Z-../DSE13LA4**	657	42800	120000
9.5	4.2	21600	0.86	343.6	**BF90Z-../DSE13LA4**	657	42800	120000

11 kW

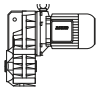

P_N	50 Hz			i	Type	m		
	n_2	M_2	f_B					
[kW]	[1/min]	[Nm]	[—]	[:1]		[kg]	[N]	[N]
11	275	380	1.3	5.38	**BF50-../DSE16MB4**	160	4500	-
11	190	550	1.05	7.71	**BF50-../DSE16MB4**	160	5100	-
11	137	760	0.89	10.68	**BF50-../DSE16MB4**	160	5600	-

The torques marked (*) are maximum permissible torques for service factor f_B=1.0.

11 kW

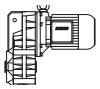

P_N	50 Hz			i	Type	m		
	n_2	M_2	f_B					
[kW]	[1/min]	[Nm]	[—]	[:1]		[kg]	[N]	[N]
11	88	1190	0.8	16.70	**BF50-../DSE16MB4**	160	6200	-
11	280	375	2.0	5.22	**BF60-../DSE16MB4**	193	5200	14800
11	189	550	1.6	7.74	**BF60-../DSE16MB4**	193	6000	16900
11	142	730	1.4	10.31	**BF60-../DSE16MB4**	193	6500	18400
11	103	1010	1.2	14.24	**BF60-../DSE16MB4**	193	7100	20000
11	87	1200	1.2	16.96	**BF60-../DSE16MB4**	193	7300	20600
11	78	1340	1.15	18.81	**BF60-../DSE16MB4**	193	7600	21500
11	65	1610	1.05	22.58	**BF60-../DSE16MB4**	193	8000	22600
11	59	1780	0.97	25.05	**BF60-../DSE16MB4**	193	8200	23200
11	47	2200	0.86	31.20	**BF60-../DSE16MB4**	193	8800	24900
11	42.5	2450	0.81	34.62	**BF60-../DSE16MB4**	193	9100	25700
11	70	1500	3.1	21.04	**BF70-../DSE16MB4**	276	6400	26300
11	60	1750	2.9	24.55	**BF70-../DSE16MB4**	276	7000	27700
11	54	1940	2.7	27.29	**BF70-../DSE16MB4**	276	7000	28400
11	46	2250	2.3	31.84	**BF70-../DSE16MB4**	276	7700	30000
11	40	2600	2.0	36.88	**BF70-../DSE16MB4**	276	7900	31100
11	34	3050	1.7	43.02	**BF70-../DSE16MB4**	276	8700	32800
11	31	3350	1.55	47.82	**BF70-../DSE16MB4**	276	9100	34000
11	26.5	3950	1.3	55.79	**BF70-../DSE16MB4**	276	10200	36000
11	24	4350	1.2	61.94	**BF70-../DSE16MB4**	276	10800	37400
11	20.5	5100	1.0	72.26	**BF70-../DSE16MB4**	276	12000	39600
11	18	5800	0.9	81.82	**BF70-../DSE16MB4**	276	12800	41300
11	48.5	2150	3.3	30.21	**BF80-../DSE16MB4**	372	12300	47900
11	43.5	2400	3.2	33.61	**BF80-../DSE16MB4**	372	11700	48400
11	38.5	2700	3.0	38.14	**BF80-../DSE16MB4**	372	12200	50300
11	31	3350	2.6	47.46	**BF80-../DSE16MB4**	372	13400	53700
11	27.5	3800	2.4	53.86	**BF80-../DSE16MB4**	372	14000	55800
11	24	4350	2.1	61.55	**BF80-../DSE16MB4**	372	14800	58100
11	21	5000	1.9	69.86	**BF80-../DSE16MB4**	372	15900	60600
11	18	5800	1.65	83.16	**BF80-../DSE16MB4**	372	18400	65100
11	15.5	6700	1.4	94.38	**BF80-../DSE16MB4**	372	20300	68500
11	14	7500	1.25	107.9	**BF80-../DSE16MB4**	372	22400	72300
11	12	8700	1.1	122.4	**BF80-../DSE16MB4**	372	24500	75000
11	10.5	10000	0.95	139.7	**BF80-../DSE16MB4**	372	26700	75000
11	9.3	11200	0.85	158.5	**BF80-../DSE16MB4**	372	29000	75000
11	21	5000	3.2	70.69	**BF90-../DSE16MB4**	620	16800	74700
11	18.5	5600	3.0	80.85	**BF90-../DSE16MB4**	620	17500	77500
11	16.5	6300	2.7	90.02	**BF90-../DSE16MB4**	620	18900	80600
11	14	7500	2.2	107.5	**BF90-../DSE16MB4**	620	22300	86900
11	12.5	8400	2.0	119.7	**BF90-../DSE16MB4**	620	24500	90800
11	10.5	10000	1.7	139.1	**BF90-../DSE16MB4**	620	27700	96300
11	9.5	11000	1.55	154.8	**BF90-../DSE16MB4**	620	30100	100800
11	8.2	12800	1.3	178.6	**BF90-../DSE16MB4**	620	33400	106700
11	7.4	14100	1.2	198.8	**BF90-../DSE16MB4**	620	36000	111300
11	6.3	16600	1.0	232.6	**BF90-../DSE16MB4**	620	39900	118300
11	5.7	18400	0.91	259.0	**BF90-../DSE16MB4**	620	42800	120000
11	5.5	19100	0.97	269.8	**BF90Z-../DSE16MB4**	681	42800	120000
11	4.9	21400	0.86	300.4	**BF90Z-../DSE16MB4**	681	42800	120000

15 kW

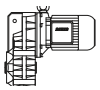

P_N	50 Hz			i	Type	m		
	n_2	M_2	f_B					
[kW]	[1/min]	[Nm]	[—]	[:1]		[kg]	[N]	[N]
15	275	520	0.96	5.38	**BF50-../DSE16LB4**	173	4500	-
15	280	510	1.5	5.22	**BF60-../DSE16LB4**	206	5200	14800
15	189	750	1.15	7.74	**BF60-../DSE16LB4**	206	6000	16900
15	142	1000	1.0	10.31	**BF60-../DSE16LB4**	206	6500	18400
15	103	1390	0.86	14.24	**BF60-../DSE16LB4**	206	7100	20000
15	87	1640	0.88	16.96	**BF60-../DSE16LB4**	206	7300	20600
15	78	1830	0.83	18.81	**BF60-../DSE16LB4**	206	7600	21500

The torques marked (*) are maximum permissible torques for service factor f_B=1.0.

15 kW

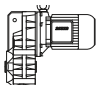

P_N	50 Hz			i	Type	m		
	n_2	M_2	f_B					
[kW]	[1/min]	[Nm]	[—]	[:1]		[kg]	[N]	[N]
15	98	1460	2.5	14.90	**BF70-../DSE16LB4**	289	5900	24000
15	84	1700	2.5	17.39	**BF70-../DSE16LB4**	289	6200	25000
15	70	2000	2.3	21.04	**BF70-../DSE16LB4**	289	6400	26300
15	60	2350	2.1	24.55	**BF70-../DSE16LB4**	289	7000	27700
15	54	2650	1.95	27.29	**BF70-../DSE16LB4**	289	7000	28400
15	46	3100	1.7	31.84	**BF70-../DSE16LB4**	289	7700	30000
15	40	3550	1.45	36.88	**BF70-../DSE16LB4**	289	7900	31100
15	34	4200	1.25	43.02	**BF70-../DSE16LB4**	289	8700	32800
15	31	4600	1.15	47.82	**BF70-../DSE16LB4**	289	9100	34000
15	26.5	5400	0.96	55.79	**BF70-../DSE16LB4**	289	10200	36000
15	24	5900	0.88	61.94	**BF70-../DSE16LB4**	289	10800	37400
15	89	1600	3.3	16.49	**BF80-../DSE16LB4**	385	11400	41400
15	63	2250	2.8	23.29	**BF80-../DSE16LB4**	385	11800	44900
15	48.5	2950	2.4	30.21	**BF80-../DSE16LB4**	385	12300	47900
15	43.5	3250	2.4	33.61	**BF80-../DSE16LB4**	385	11700	48400
15	38.5	3700	2.2	38.14	**BF80-../DSE16LB4**	385	12200	50300
15	31	4600	1.85	47.46	**BF80-../DSE16LB4**	385	13400	53700
15	27.5	5200	1.7	53.86	**BF80-../DSE16LB4**	385	14000	55800
15	24	5900	1.6	61.55	**BF80-../DSE16LB4**	385	14800	58100
15	21	6800	1.4	69.86	**BF80-../DSE16LB4**	385	15900	60600
15	18	7900	1.2	83.16	**BF80-../DSE16LB4**	385	18400	65100
15	15.5	9200	1.05	94.38	**BF80-../DSE16LB4**	385	20300	68500
15	14	10200	0.93	107.9	**BF80-../DSE16LB4**	385	22400	72300
15	12	11900	0.8	122.4	**BF80-../DSE16LB4**	385	24500	75000
15	31.5	4500	3.1	46.43	**BF90-../DSE16LB4**	632	13800	65500
15	28.5	5000	2.9	51.70	**BF90-../DSE16LB4**	632	14600	67800
15	23	6200	2.5	63.49	**BF90-../DSE16LB4**	632	15800	72000
15	21	6800	2.3	70.69	**BF90-../DSE16LB4**	632	16800	74700
15	18.5	7700	2.1	80.85	**BF90-../DSE16LB4**	632	17500	77500
15	16.5	8600	1.95	90.02	**BF90-../DSE16LB4**	632	18900	80600
15	14	10200	1.65	107.5	**BF90-../DSE16LB4**	632	22300	86900
15	12.5	11400	1.45	119.7	**BF90-../DSE16LB4**	632	24500	90800
15	10.5	13600	1.25	139.1	**BF90-../DSE16LB4**	632	27700	96300
15	9.5	15000	1.1	154.8	**BF90-../DSE16LB4**	632	30100	100800
15	8.2	17400	0.97	178.6	**BF90-../DSE16LB4**	632	33400	106700
15	7.4	19300	0.87	198.8	**BF90-../DSE16LB4**	632	36000	111300

18.5 kW

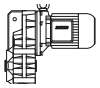

P_N	50 Hz			i	Type	m		
	n_2	M_2	f_B					
[kW]	[1/min]	[Nm]	[—]	[:1]		[kg]	[N]	[N]
18.5	280	630	1.2	5.22	**BF60-../DSE16XB4**	216	5200	14800
18.5	189	930	0.93	7.74	**BF60-../DSE16XB4**	216	6000	16900
18.5	142	1240	0.82	10.31	**BF60-../DSE16XB4**	216	6500	18400
18.5	98	1800	2.0	14.90	**BF70-../DSE16XB4**	299	5900	24000
18.5	84	2100	2.0	17.39	**BF70-../DSE16XB4**	299	6200	25000
18.5	70	2500	1.85	21.04	**BF70-../DSE16XB4**	299	6400	26300
18.5	60	2900	1.75	24.55	**BF70-../DSE16XB4**	299	7000	27700
18.5	54	3250	1.6	27.29	**BF70-../DSE16XB4**	299	7000	28400
18.5	46	3800	1.35	31.84	**BF70-../DSE16XB4**	299	7700	30000
18.5	40	4400	1.2	36.88	**BF70-../DSE16XB4**	299	7900	31100
18.5	34	5100	1.0	43.02	**BF70-../DSE16XB4**	299	8700	32800
18.5	31	5600	0.93	47.82	**BF70-../DSE16XB4**	299	9100	34000
18.5	89	1980	2.7	16.49	**BF80-../DSE16XB4**	395	11400	41400
18.5	63	2800	2.3	23.29	**BF80-../DSE16XB4**	395	11800	44900
18.5	48.5	3600	2.0	30.21	**BF80-../DSE16XB4**	395	12300	47900
18.5	43.5	4050	1.9	33.61	**BF80-../DSE16XB4**	395	11700	48400
18.5	38.5	4550	1.75	38.14	**BF80-../DSE16XB4**	395	12200	50300
18.5	31	5600	1.55	47.46	**BF80-../DSE16XB4**	395	13400	53700
18.5	27.5	6400	1.4	53.86	**BF80-../DSE16XB4**	395	14000	55800
18.5	24	7300	1.25	61.55	**BF80-../DSE16XB4**	395	14800	58100

The torques marked (*) are maximum permissible torques for service factor f_B=1.0.

18.5 kW

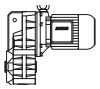

P_N	50 Hz			i	Type	m		
	n_2	M_2	f_B					
[kW]	[1/min]	[Nm]	[—]	[:1]		[kg]	[N]	[N]
18.5	21	8400	1.15	69.86	**BF80-../DSE16XB4**	395	15900	60600
18.5	18	9800	0.97	83.16	**BF80-../DSE16XB4**	395	18400	65100
18.5	15.5	11300	0.84	94.38	**BF80-../DSE16XB4**	395	20300	68500
18.5	31.5	5600	2.5	46.43	**BF90-../DSE16XB4**	642	13800	65500
18.5	28.5	6100	2.4	51.70	**BF90-../DSE16XB4**	642	14600	67800
18.5	23	7600	2.0	63.49	**BF90-../DSE16XB4**	642	15800	72000
18.5	21	8400	1.9	70.69	**BF90-../DSE16XB4**	642	16800	74700
18.5	18.5	9500	1.75	80.85	**BF90-../DSE16XB4**	642	17500	77500
18.5	16.5	10700	1.55	90.02	**BF90-../DSE16XB4**	642	18900	80600
18.5	14	12600	1.35	107.5	**BF90-../DSE16XB4**	642	22300	86900
18.5	12.5	14100	1.2	119.7	**BF90-../DSE16XB4**	642	24500	90800
18.5	10.5	16800	1.0	139.1	**BF90-../DSE16XB4**	642	27700	96300
18.5	9.5	18500	0.91	154.8	**BF90-../DSE16XB4**	642	30100	100800

22 kW

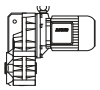

P_N	50 Hz			i	Type	m		
	n_2	M_2	f_B					
[kW]	[1/min]	[Nm]	[—]	[:1]		[kg]	[N]	[N]
22	142	1470	1.7	10.32	**BF70-../DSE18LB4**	340	4600	18700
22	122	1720	1.7	12.04	**BF70-../DSE18LB4**	340	4900	19700
22	98	2100	1.75	14.90	**BF70-../DSE18LB4**	340	5900	24000
22	84	2500	1.7	17.39	**BF70-../DSE18LB4**	340	6200	25000
22	70	3000	1.55	21.04	**BF70-../DSE18LB4**	340	6400	26300
22	60	3500	1.45	24.55	**BF70-../DSE18LB4**	340	7000	27700
22	54	3850	1.35	27.29	**BF70-../DSE18LB4**	340	7000	28400
22	46	4550	1.15	31.84	**BF70-../DSE18LB4**	340	7700	30000
22	40	5200	1.0	36.88	**BF70-../DSE18LB4**	340	7900	31100
22	34	6100	0.85	43.02	**BF70-../DSE18LB4**	340	8700	32800
22	128	1640	2.2	11.42	**BF80-../DSE18LB4**	436	8900	32200
22	89	2350	2.3	16.49	**BF80-../DSE18LB4**	436	11400	41400
22	63	3300	1.9	23.29	**BF80-../DSE18LB4**	436	11800	44900
22	48.5	4300	1.65	30.21	**BF80-../DSE18LB4**	436	12300	47900
22	43.5	4800	1.6	33.61	**BF80-../DSE18LB4**	436	11700	48400
22	38.5	5400	1.5	38.14	**BF80-../DSE18LB4**	436	12200	50300
22	31	6700	1.3	47.46	**BF80-../DSE18LB4**	436	13400	53700
22	27.5	7600	1.2	53.86	**BF80-../DSE18LB4**	436	14000	55800
22	24	8700	1.05	61.55	**BF80-../DSE18LB4**	436	14800	58100
22	21	10000	0.95	69.86	**BF80-../DSE18LB4**	436	15900	60600
22	18	11600	0.82	83.16	**BF80-../DSE18LB4**	436	18400	65100
22	61	3400	3.3	23.95	**BF90-../DSE18LB4**	688	11100	54300
22	43.5	4800	2.7	33.71	**BF90-../DSE18LB4**	688	11900	59300
22	39	5300	2.5	37.54	**BF90-../DSE18LB4**	688	12700	61500
22	31.5	6600	2.1	46.43	**BF90-../DSE18LB4**	688	13800	65500
22	28.5	7300	2.0	51.70	**BF90-../DSE18LB4**	688	14600	67800
22	23	9100	1.7	63.49	**BF90-../DSE18LB4**	688	15800	72000
22	21	10000	1.6	70.69	**BF90-../DSE18LB4**	688	16800	74700
22	18.5	11300	1.45	80.85	**BF90-../DSE18LB4**	688	17500	77500
22	16.5	12700	1.3	90.02	**BF90-../DSE18LB4**	688	18900	80600
22	14	15000	1.1	107.5	**BF90-../DSE18LB4**	688	22300	86900
22	12.5	16800	1.0	119.7	**BF90-../DSE18LB4**	688	24500	90800
22	10.5	20000	0.84	139.1	**BF90-../DSE18LB4**	688	27700	96300

30 kW

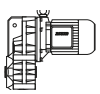

P_N	50 Hz			i	Type	m		
	n_2	M_2	f_B					
[kW]	[1/min]	[Nm]	[—]	[:1]		[kg]	[N]	[N]
30	142	2000	1.25	10.32	**BF70-../DSE18XB4**	358	4600	18700

The torques marked (*) are maximum permissible torques for service factor f_B=1.0.

30 kW

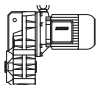

P_N	50 Hz			i	**Type**	m		
	n_2	M_2	f_B					
[kW]	[1/min]	[Nm]	[—]	[:1]		[kg]	[N]	[N]
30	122	2300	1.3	12.04	**BF70-../DSE18XB4**	358	4900	19700
30	98	2900	1.25	14.90	**BF70-../DSE18XB4**	358	5900	24000
30	84	3400	1.25	17.39	**BF70-../DSE18XB4**	358	6200	25000
30	70	4050	1.15	21.04	**BF70-../DSE18XB4**	358	6400	26300
30	60	4750	1.05	24.55	**BF70-../DSE18XB4**	358	7000	27700
30	54	5300	0.98	27.29	**BF70-../DSE18XB4**	358	7000	28400
30	46	6200	0.84	31.84	**BF70-../DSE18XB4**	358	7700	30000
30	128	2200	1.65	11.42	**BF80-../DSE18XB4**	454	8900	32200
30	89	3200	1.65	16.49	**BF80-../DSE18XB4**	454	11400	41400
30	63	4500	1.4	23.29	**BF80-../DSE18XB4**	454	11800	44900
30	48.5	5900	1.2	30.21	**BF80-../DSE18XB4**	454	12300	47900
30	43.5	6500	1.2	33.61	**BF80-../DSE18XB4**	454	11700	48400
30	38.5	7400	1.1	38.14	**BF80-../DSE18XB4**	454	12200	50300
30	31	9200	0.94	47.46	**BF80-../DSE18XB4**	454	13400	53700
30	27.5	10400	0.86	53.86	**BF80-../DSE18XB4**	454	14000	55800
30	118	2400	3.0	12.45	**BF90-../DSE18XB4**	706	8000	39700
30	84	3400	3.0	17.39	**BF90-../DSE18XB4**	706	10000	49500
30	61	4650	2.4	23.95	**BF90-../DSE18XB4**	706	11100	54300
30	43.5	6500	2.0	33.71	**BF90-../DSE18XB4**	706	11900	59300
30	39	7300	1.8	37.54	**BF90-../DSE18XB4**	706	12700	61500
30	31.5	9000	1.55	46.43	**BF90-../DSE18XB4**	706	13800	65500
30	28.5	10000	1.45	51.70	**BF90-../DSE18XB4**	706	14600	67800
30	23	12400	1.25	63.49	**BF90-../DSE18XB4**	706	15800	72000
30	21	13600	1.15	70.69	**BF90-../DSE18XB4**	706	16800	74700
30	18.5	15400	1.05	80.85	**BF90-../DSE18XB4**	706	17500	77500
30	16.5	17300	0.97	90.02	**BF90-../DSE18XB4**	706	18900	80600
30	14	20400	0.82	107.5	**BF90-../DSE18XB4**	706	22300	86900

The torques marked (*) are maximum permissible torques for service factor f_B=1.0.

0.03 kW

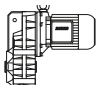

P_N	50 Hz			i	Type	m		
	n_2	M_2	f_B					
[kW]	[1/min]	[Nm]	[—]	[:1]		[kg]	[N]	[N]
0.03	9.0	31.5	7.6	151.2	**BF10Z-../D04LA4**	21	6400	-
0.03	8.2	34.5	7.0	166.2	**BF10Z-../D04LA4**	21	6400	-
0.03	7.5	38	6.3	180.1	**BF10Z-../D04LA4**	21	6400	-
0.03	6.9	41.5	5.8	198.0	**BF10Z-../D04LA4**	21	6400	-
0.03	6.3	45	5.3	214.5	**BF10Z-../D04LA4**	21	6400	-
0.03	5.8	49	4.9	235.8	**BF10Z-../D04LA4**	21	6400	-
0.03	5.3	54	4.4	257.4	**BF10Z-../D04LA4**	21	6400	-
0.03	4.8	59	4.1	283.1	**BF10Z-../D04LA4**	21	6400	-
0.03	4.2	68	3.5	324.3	**BF10Z-../D04LA4**	21	6400	-
0.03	3.8	75	3.2	356.6	**BF10Z-../D04LA4**	21	6400	-
0.03	3.6	79	3.0	380.2	**BF10Z-../D04LA4**	21	6400	-
0.03	3.3	86	2.8	418.0	**BF10Z-../D04LA4**	21	6400	-
0.03	2.9	98	2.4	469.5	**BF10Z-../D04LA4**	21	6400	-
0.03	2.6	110	2.2	539.1	**BF10Z-../D04LA4**	21	6400	-
0.03	2.3	124	1.95	592.8	**BF10Z-../D04LA4**	21	6400	-
0.03	1.8	97	2.7	768.2	**BF10G06-../D04LA4**	25	6400	-
0.03	1.6	110	2.4	845.1	**BF10G06-../D04LA4**	25	6400	-
0.03	1.4	130	2.0	994.0	**BF10G06-../D04LA4**	25	6400	-
0.03	1.2	159	1.65	1190	**BF10G06-../D04LA4**	25	6400	-
0.03	0.95	210	1.25	1452	**BF10G06-../D04LA4**	25	6400	-
0.03	0.8	260*	1.0	1744	**BF10G06-../D04LA4**	25	6400	-
0.03	0.65	260*	1.0	2096	**BF10G06-../D04LA4**	25	6400	-
0.03	0.55	260*	1.0	2467	**BF10G06-../D04LA4**	25	6400	-
0.03	0.46	260*	1.0	2952	**BF10G06-../D04LA4**	25	6400	-
0.03	0.42	260*	1.0	3220	**BF10G06-../D04LA4**	25	6400	-
0.03	0.35	260*	1.0	3942	**BF10G06-../D04LA4**	25	6400	-
0.03	0.3	260*	1.0	4569	**BF10G06-../D04LA4**	25	6400	-
0.03	0.24	260*	1.0	5709	**BF10G06-../D04LA4**	25	6400	-
0.03	0.21	260*	1.0	6550	**BF10G06-../D04LA4**	25	6400	-
0.03	0.19	260*	1.0	7144	**BF10G06-../D04LA4**	25	6400	-
0.03	0.16	260*	1.0	8681	**BF10G06-../D04LA4**	25	6400	-
0.03	0.15	260*	1.0	9471	**BF10G06-../D04LA4**	25	6400	-
0.03	1.2	162	2.8	1140	**BF20G06-../D04LA4**	31	7900	-
0.03	1.0	200	2.3	1392	**BF20G06-../D04LA4**	31	7900	-
0.03	0.9	230	2.0	1533	**BF20G06-../D04LA4**	31	7900	-
0.03	0.8	265	1.75	1764	**BF20G06-../D04LA4**	31	7900	-
0.03	0.65	345	1.35	2192	**BF20G06-../D04LA4**	31	7900	-
0.03	0.55	410	1.1	2579	**BF20G06-../D04LA4**	31	7900	-
0.03	0.48	460*	1.0	2829	**BF20G06-../D04LA4**	31	7900	-
0.03	0.44	460*	1.0	3086	**BF20G06-../D04LA4**	31	7900	-
0.03	0.36	460*	1.0	3778	**BF20G06-../D04LA4**	31	7900	-
0.03	0.31	460*	1.0	4379	**BF20G06-../D04LA4**	31	7900	-
0.03	0.25	460*	1.0	5471	**BF20G06-../D04LA4**	31	7900	-
0.03	0.2	460*	1.0	6847	**BF20G06-../D04LA4**	31	7900	-
0.03	0.17	460*	1.0	8320	**BF20G06-../D04LA4**	31	7900	-
0.03	0.15	460*	1.0	9077	**BF20G06-../D04LA4**	31	7900	-
0.03	1.0	200	3.2	1404	**BF30G06-../D04LA4**	41	7400	-
0.03	0.85	245	2.6	1686	**BF30G06-../D04LA4**	41	7400	-
0.03	0.7	315	2.0	2026	**BF30G06-../D04LA4**	41	7400	-
0.03	0.6	370	1.7	2386	**BF30G06-../D04LA4**	41	7400	-
0.03	0.48	485	1.3	2854	**BF30G06-../D04LA4**	41	7400	-
0.03	0.39	610	1.05	3493	**BF30G06-../D04LA4**	41	7400	-
0.03	0.36	630*	1.0	3811	**BF30G06-../D04LA4**	41	7400	-
0.03	0.31	630*	1.0	4417	**BF30G06-../D04LA4**	41	7400	-
0.03	0.27	630*	1.0	5060	**BF30G06-../D04LA4**	41	7400	-
0.03	0.22	630*	1.0	6333	**BF30G06-../D04LA4**	41	7400	-
0.03	0.19	630*	1.0	7206	**BF30G06-../D04LA4**	41	7400	-
0.03	0.18	630*	1.0	7861	**BF30G06-../D04LA4**	41	7400	-
0.03	0.15	630*	1.0	9157	**BF30G06-../D04LA4**	41	7400	-

The torques marked (*) are maximum permissible torques for service factor f_B=1,0.

0.04 kW

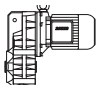

P_N	50 Hz			i	Type	m		
	n_2	M_2	f_B					
[kW]	[1/min]	[Nm]	[—]	[:1]		[kg]	[N]	[N]
0.04	9.0	42	5.7	151.2	**BF10Z-../D04LA4**	21	6400	-
0.04	8.2	46.5	5.2	166.2	**BF10Z-../D04LA4**	21	6400	-
0.04	7.5	50	4.8	180.1	**BF10Z-../D04LA4**	21	6400	-
0.04	6.9	55	4.4	198.0	**BF10Z-../D04LA4**	21	6400	-
0.04	6.3	60	4.0	214.5	**BF10Z-../D04LA4**	21	6400	-
0.04	5.8	65	3.7	235.8	**BF10Z-../D04LA4**	21	6400	-
0.04	5.3	72	3.3	257.4	**BF10Z-../D04LA4**	21	6400	-
0.04	4.8	79	3.0	283.1	**BF10Z-../D04LA4**	21	6400	-
0.04	4.2	90	2.7	324.3	**BF10Z-../D04LA4**	21	6400	-
0.04	3.8	100	2.4	356.6	**BF10Z-../D04LA4**	21	6400	-
0.04	3.6	106	2.3	380.2	**BF10Z-../D04LA4**	21	6400	-
0.04	3.3	115	2.1	418.0	**BF10Z-../D04LA4**	21	6400	-
0.04	2.9	131	1.85	469.5	**BF10Z-../D04LA4**	21	6400	-
0.04	2.6	146	1.65	539.1	**BF10Z-../D04LA4**	21	6400	-
0.04	2.3	166	1.45	592.8	**BF10Z-../D04LA4**	21	6400	-
0.04	2.1	119	2.2	643.8	**BF10G06-../D04LA4**	25	6400	-
0.04	1.8	150	1.75	768.2	**BF10G06-../D04LA4**	25	6400	-
0.04	1.6	170	1.55	845.1	**BF10G06-../D04LA4**	25	6400	-
0.04	1.4	199	1.3	994.0	**BF10G06-../D04LA4**	25	6400	-
0.04	1.2	235	1.1	1190	**BF10G06-../D04LA4**	25	6400	-
0.04	3.0	127	3.3	460.0	**BF20Z-../D04LA4**	28	7900	-
0.04	1.9	141	3.3	736.1	**BF20G06-../D04LA4**	31	7900	-
0.04	1.7	159	2.9	810.0	**BF20G06-../D04LA4**	31	7900	-
0.04	1.5	183	2.5	952.7	**BF20G06-../D04LA4**	31	7900	-
0.04	1.2	240	1.9	1140	**BF20G06-../D04LA4**	31	7900	-
0.04	1.0	295	1.55	1392	**BF20G06-../D04LA4**	31	7900	-
0.04	0.9	335	1.35	1533	**BF20G06-../D04LA4**	31	7900	-
0.04	0.8	385	1.2	1764	**BF20G06-../D04LA4**	31	7900	-
0.04	1.2	240	2.6	1150	**BF30G06-../D04LA4**	41	7400	-
0.04	1.1	265	2.4	1286	**BF30G06-../D04LA4**	41	7400	-
0.04	1.0	295	2.1	1404	**BF30G06-../D04LA4**	41	7400	-
0.04	0.85	355	1.75	1686	**BF30G06-../D04LA4**	41	7400	-
0.04	0.7	450	1.4	2026	**BF30G06-../D04LA4**	41	7400	-
0.04	0.6	530	1.2	2386	**BF30G06-../D04LA4**	41	7400	-

0.06 kW

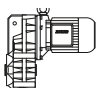

P_N	50 Hz			i	Type	m		
	n_2	M_2	f_B					
[kW]	[1/min]	[Nm]	[—]	[:1]		[kg]	[N]	[N]
0.06	24	23.5	10	56.39	**BF10-../D06LA4**	23	4550	-
0.06	22	26	9.2	61.55	**BF10-../D06LA4**	23	4700	-
0.06	20	28.5	8.4	67.69	**BF10-../D06LA4**	23	4900	-
0.06	17.5	32.5	7.4	77.55	**BF10-../D06LA4**	23	5100	-
0.06	16	35.5	6.8	85.27	**BF10-../D06LA4**	23	5300	-
0.06	15	38	6.3	90.91	**BF10-../D06LA4**	23	5400	-
0.06	14	40.5	5.9	99.97	**BF10-../D06LA4**	23	5600	-
0.06	12.5	45.5	5.3	112.3	**BF10-../D06LA4**	23	5900	-
0.06	11	52	4.6	123.5	**BF10-../D06LA4**	23	6100	-
0.06	10.5	54	4.4	128.9	**BF10-../D06LA4**	23	6200	-
0.06	9.6	59	4.1	141.8	**BF10-../D06LA4**	23	6400	-
0.06	7.5	76	3.2	180.1	**BF10Z-../D06LA4**	24	6400	-
0.06	6.9	83	2.9	198.0	**BF10Z-../D06LA4**	24	6400	-
0.06	6.3	90	2.7	214.5	**BF10Z-../D06LA4**	24	6400	-
0.06	5.8	98	2.4	235.8	**BF10Z-../D06LA4**	24	6400	-
0.06	5.3	108	2.2	257.4	**BF10Z-../D06LA4**	24	6400	-
0.06	4.8	119	2.0	283.1	**BF10Z-../D06LA4**	24	6400	-
0.06	4.2	136	1.75	324.3	**BF10Z-../D06LA4**	24	6400	-
0.06	3.8	150	1.6	356.6	**BF10Z-../D06LA4**	24	6400	-
0.06	3.6	159	1.5	380.2	**BF10Z-../D06LA4**	24	6400	-
0.06	3.3	173	1.4	418.0	**BF10Z-../D06LA4**	24	6400	-
0.06	2.9	197	1.2	469.5	**BF10Z-../D06LA4**	24	6400	-
0.06	2.6	220	1.1	539.1	**BF10Z-../D06LA4**	24	6400	-
0.06	2.3	245	0.98	592.8	**BF10Z-../D06LA4**	24	6400	-

The torques marked (*) are maximum permissible torques for service factor f_B=1,0.

0.06 kW

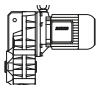

P_N	50 Hz			i	Type	m		
	n_2	M_2	f_B					
[kW]	[1/min]	[Nm]	[—]	[:1]		[kg]	[N]	[N]
0.06	2.1	210	1.25	643.8	**BF10G06-../D06LA4**	28	6400	-
0.06	1.8	255	1.0	768.2	**BF10G06-../D06LA4**	28	6400	-
0.06	1.6	290	0.9	845.1	**BF10G06-../D06LA4**	28	6400	-
0.06	4.2	136	3.1	325.2	**BF20Z-../D06LA4**	31	7900	-
0.06	4.0	143	2.9	339.1	**BF20Z-../D06LA4**	31	7900	-
0.06	3.7	154	2.7	373.1	**BF20Z-../D06LA4**	31	7900	-
0.06	3.3	173	2.4	418.1	**BF20Z-../D06LA4**	31	7900	-
0.06	3.0	191	2.2	460.0	**BF20Z-../D06LA4**	31	7900	-
0.06	2.7	157	2.9	513.7	**BF20G06-../D06LA4**	34	7900	-
0.06	2.2	200	2.3	617.0	**BF20G06-../D06LA4**	34	7900	-
0.06	1.9	240	1.9	736.1	**BF20G06-../D06LA4**	34	7900	-
0.06	1.7	270	1.7	810.0	**BF20G06-../D06LA4**	34	7900	-
0.06	1.5	310	1.5	952.7	**BF20G06-../D06LA4**	34	7900	-
0.06	1.2	400	1.15	1140	**BF20G06-../D06LA4**	34	7900	-
0.06	1.0	485	0.95	1392	**BF20G06-../D06LA4**	34	7900	-
0.06	3.3	173	3.3	412.6	**BF30Z-../D06LA4**	42	7400	-
0.06	3.0	191	3.0	463.3	**BF30Z-../D06LA4**	42	7400	-
0.06	2.6	220	2.6	537.0	**BF30Z-../D06LA4**	42	7400	-
0.06	2.3	245	2.3	590.7	**BF30Z-../D06LA4**	42	7400	-
0.06	2.2	200	3.2	622.4	**BF30G06-../D06LA4**	45	7400	-
0.06	2.0	225	2.8	705.1	**BF30G06-../D06LA4**	45	7400	-
0.06	1.7	270	2.3	817.1	**BF30G06-../D06LA4**	45	7400	-
0.06	1.5	310	2.0	961.1	**BF30G06-../D06LA4**	45	7400	-
0.06	1.2	400	1.6	1150	**BF30G06-../D06LA4**	45	7400	-
0.06	1.1	435	1.45	1286	**BF30G06-../D06LA4**	45	7400	-
0.06	1.0	485	1.3	1404	**BF30G06-../D06LA4**	45	7400	-
0.06	0.85	580	1.1	1686	**BF30G06-../D06LA4**	45	7400	-
0.06	0.95	340	2.9	1484	**BF40G10-../D06LA4**	58	10600	-
0.06	0.75	460	2.2	1810	**BF40G10-../D06LA4**	58	10600	-
0.06	0.7	500	2.0	1997	**BF40G10-../D06LA4**	58	10600	-
0.06	0.55	710	1.4	2536	**BF40G10-../D06LA4**	58	10600	-
0.06	0.49	840	1.2	2810	**BF40G10-../D06LA4**	58	10600	-
0.06	0.7	520	2.7	2059	**BF50G10-../D06LA4**	86	13600	-
0.06	0.6	640	2.2	2360	**BF50G10-../D06LA4**	86	13600	-
0.06	0.49	860	1.65	2810	**BF50G10-../D06LA4**	86	13600	-
0.06	0.41	1090	1.3	3348	**BF50G10-../D06LA4**	86	13600	-
0.06	0.34	1370	1.0	4019	**BF50G10-../D06LA4**	86	13600	-
0.06	0.42	860	2.9	3237	**BF60G20-../D06LA4**	134	15300	43300
0.06	0.35	1130	2.2	3883	**BF60G20-../D06LA4**	134	15300	43300
0.06	0.3	1400	1.8	4646	**BF60G20-../D06LA4**	134	15300	43300
0.06	0.26	1700	1.45	5241	**BF60G20-../D06LA4**	134	15300	43300
0.06	0.23	1980	1.25	6014	**BF60G20-../D06LA4**	134	15300	43300
0.06	0.21	2200	1.15	6679	**BF60G20-../D06LA4**	134	15300	43300
0.06	0.24	1890	3.0	5691	**BF70G20-../D06LA4**	212	16100	47700
0.06	0.21	2200	2.6	6530	**BF70G20-../D06LA4**	212	16100	47700
0.06	0.19	2500	2.3	7248	**BF70G20-../D06LA4**	212	16100	47700
0.06	0.17	2850	2.0	8052	**BF70G20-../D06LA4**	212	16100	47700

0.09 kW

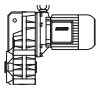

P_N	50 Hz			i	Type	m		
	n_2	M_2	f_B					
[kW]	[1/min]	[Nm]	[—]	[:1]		[kg]	[N]	[N]
0.09	34	25	9.6	39.75	**BF10-../D06LA4**	23	3950	-
0.09	31.5	27	8.9	43.06	**BF10-../D06LA4**	23	4100	-
0.09	29	29.5	8.1	47.35	**BF10-../D06LA4**	23	4250	-
0.09	26.5	32	7.5	51.28	**BF10-../D06LA4**	23	4400	-
0.09	24	35.5	6.8	56.39	**BF10-../D06LA4**	23	4550	-
0.09	22	39	6.2	61.55	**BF10-../D06LA4**	23	4700	-
0.09	20	42.5	5.6	67.69	**BF10-../D06LA4**	23	4900	-

The torques marked (*) are maximum permissible torques for service factor f_B=1,0.

0.09 kW

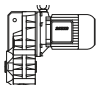

P_N	50 Hz			i	Type	m		
	n_2	M_2	f_B					
[kW]	[1/min]	[Nm]	[—]	[:1]		[kg]	[N]	[N]
0.09	17.5	49	4.9	77.55	**BF10-../D06LA4**	23	5100	-
0.09	16	53	4.5	85.27	**BF10-../D06LA4**	23	5300	-
0.09	15	57	4.2	90.91	**BF10-../D06LA4**	23	5400	-
0.09	14	61	3.9	99.97	**BF10-../D06LA4**	23	5600	-
0.09	12.5	68	3.5	112.3	**BF10-../D06LA4**	23	5900	-
0.09	11	78	3.1	123.5	**BF10-../D06LA4**	23	6100	-
0.09	10.5	81	3.0	128.9	**BF10-../D06LA4**	23	6200	-
0.09	9.6	89	2.7	141.8	**BF10-../D06LA4**	23	6400	-
0.09	9.0	95	2.5	151.2	**BF10Z-../D06LA4**	24	6400	-
0.09	8.2	104	2.3	166.2	**BF10Z-../D06LA4**	24	6400	-
0.09	7.5	114	2.1	180.1	**BF10Z-../D06LA4**	24	6400	-
0.09	6.9	124	1.95	198.0	**BF10Z-../D06LA4**	24	6400	-
0.09	6.3	136	1.75	214.5	**BF10Z-../D06LA4**	24	6400	-
0.09	5.8	148	1.6	235.8	**BF10Z-../D06LA4**	24	6400	-
0.09	5.3	162	1.5	257.4	**BF10Z-../D06LA4**	24	6400	-
0.09	4.8	179	1.35	283.1	**BF10Z-../D06LA4**	24	6400	-
0.09	4.2	200	1.2	324.3	**BF10Z-../D06LA4**	24	6400	-
0.09	3.8	225	1.05	356.6	**BF10Z-../D06LA4**	24	6400	-
0.09	3.6	235	1.0	380.2	**BF10Z-../D06LA4**	24	6400	-
0.09	3.3	260	0.92	418.0	**BF10Z-../D06LA4**	24	6400	-
0.09	2.9	295	0.81	469.5	**BF10Z-../D06LA4**	24	6400	-
0.09	2.6	270	0.96	536.0	**BF10G06-../D06LA4**	28	6400	-
0.09	6.3	136	3.1	216.9	**BF20Z-../D06LA4**	31	7900	-
0.09	5.8	148	2.8	235.9	**BF20Z-../D06LA4**	31	7900	-
0.09	5.3	162	2.6	259.6	**BF20Z-../D06LA4**	31	7900	-
0.09	4.6	186	2.3	295.5	**BF20Z-../D06LA4**	31	7900	-
0.09	4.2	200	2.1	325.2	**BF20Z-../D06LA4**	31	7900	-
0.09	4.0	210	2.0	339.1	**BF20Z-../D06LA4**	31	7900	-
0.09	3.7	230	1.85	373.1	**BF20Z-../D06LA4**	31	7900	-
0.09	3.3	260	1.6	418.1	**BF20Z-../D06LA4**	31	7900	-
0.09	3.0	285	1.45	460.0	**BF20Z-../D06LA4**	31	7900	-
0.09	2.7	260	1.75	513.7	**BF20G06-../D06LA4**	34	7900	-
0.09	2.2	330	1.4	617.0	**BF20G06-../D06LA4**	34	7900	-
0.09	1.9	390	1.2	736.1	**BF20G06-../D06LA4**	34	7900	-
0.09	1.7	440	1.05	810.0	**BF20G06-../D06LA4**	34	7900	-
0.09	1.5	500	0.92	952.7	**BF20G06-../D06LA4**	34	7900	-
0.09	4.7	182	3.2	289.8	**BF30Z-../D06LA4**	42	7400	-
0.09	4.4	195	2.9	310.7	**BF30Z-../D06LA4**	42	7400	-
0.09	4.0	210	2.7	341.8	**BF30Z-../D06LA4**	42	7400	-
0.09	3.6	235	2.4	375.1	**BF30Z-../D06LA4**	42	7400	-
0.09	3.3	260	2.2	412.6	**BF30Z-../D06LA4**	42	7400	-
0.09	3.0	285	2.0	463.3	**BF30Z-../D06LA4**	42	7400	-
0.09	2.6	330	1.75	537.0	**BF30Z-../D06LA4**	42	7400	-
0.09	2.3	370	1.55	590.7	**BF30Z-../D06LA4**	42	7400	-
0.09	2.2	330	1.9	622.4	**BF30G06-../D06LA4**	45	7400	-
0.09	2.0	370	1.7	705.1	**BF30G06-../D06LA4**	45	7400	-
0.09	1.7	435	1.45	817.1	**BF30G06-../D06LA4**	45	7400	-
0.09	1.5	500	1.25	961.1	**BF30G06-../D06LA4**	45	7400	-
0.09	1.2	630	1.0	1150	**BF30G06-../D06LA4**	45	7400	-
0.09	1.1	690	0.91	1286	**BF30G06-../D06LA4**	45	7400	-
0.09	1.0	770	0.82	1404	**BF30G06-../D06LA4**	45	7400	-
0.09	3.0	285	3.2	459.1	**BF40Z-../D06LA4**	53	10600	-
0.09	2.7	315	2.9	514.6	**BF40Z-../D06LA4**	53	10600	-
0.09	2.4	355	2.5	566.1	**BF40Z-../D06LA4**	53	10600	-
0.09	1.5	350	2.9	928.9	**BF40G10-../D06LA4**	58	10600	-
0.09	1.3	420	2.4	1106	**BF40G10-../D06LA4**	58	10600	-
0.09	1.1	540	1.85	1324	**BF40G10-../D06LA4**	58	10600	-
0.09	0.95	640	1.55	1484	**BF40G10-../D06LA4**	58	10600	-
0.09	0.75	840	1.2	1810	**BF40G10-../D06LA4**	58	10600	-
0.09	0.7	910	1.1	1997	**BF40G10-../D06LA4**	58	10600	-
0.09	1.2	500	2.8	1203	**BF50G10-../D06LA4**	86	13600	-
0.09	1.0	620	2.3	1359	**BF50G10-../D06LA4**	86	13600	-
0.09	0.9	680	2.1	1520	**BF50G10-../D06LA4**	86	13600	-
0.09	0.85	730	1.9	1684	**BF50G10-../D06LA4**	86	13600	-
0.09	0.7	920	1.5	2059	**BF50G10-../D06LA4**	86	13600	-
0.09	0.6	1120	1.25	2360	**BF50G10-../D06LA4**	86	13600	-

The torques marked (*) are maximum permissible torques for service factor f_B=1,0.

0.09 kW

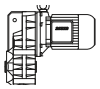

P_N	50 Hz			i	Type	m		
	n_2	M_2	f_B					
[kW]	[1/min]	[Nm]	[—]	[:1]		[kg]	[N]	[N]
0.09	0.7	780	3.2	1955	**BF60G20-../D06LA4**	134	15300	43300
0.09	0.65	860	2.9	2172	**BF60G20-../D06LA4**	134	15300	43300
0.09	0.49	1250	2.0	2781	**BF60G20-../D06LA4**	134	15300	43300
0.09	0.42	1540	1.6	3237	**BF60G20-../D06LA4**	134	15300	43300
0.09	0.35	1950	1.3	3883	**BF60G20-../D06LA4**	134	15300	43300
0.09	0.3	2350	1.05	4646	**BF60G20-../D06LA4**	134	15300	43300
0.09	0.34	2000	2.9	4090	**BF70G20-../D06LA4**	212	16100	47700
0.09	0.3	2350	2.4	4542	**BF70G20-../D06LA4**	212	16100	47700
0.09	0.27	2650	2.2	5124	**BF70G20-../D06LA4**	212	16100	47700
0.09	0.24	3050	1.85	5691	**BF70G20-../D06LA4**	212	16100	47700
0.09	0.21	3600	1.6	6530	**BF70G20-../D06LA4**	212	16100	47700
0.09	0.19	4000	1.45	7248	**BF70G20-../D06LA4**	212	16100	47700
0.09	0.17	4550	1.25	8052	**BF70G20-../D06LA4**	212	16100	47700

0.11 kW

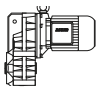

P_N	50 Hz			i	Type	m		
	n_2	M_2	f_B					
[kW]	[1/min]	[Nm]	[—]	[:1]		[kg]	[N]	[N]
0.11	9.0	116	2.1	151.2	**BF10Z-../D04LA4**	21	6400	-
0.11	8.2	128	1.9	166.2	**BF10Z-../D04LA4**	21	6400	-
0.11	7.5	140	1.7	180.1	**BF10Z-../D04LA4**	21	6400	-
0.11	6.9	152	1.6	198.0	**BF10Z-../D04LA4**	21	6400	-
0.11	6.3	166	1.45	214.5	**BF10Z-../D04LA4**	21	6400	-
0.11	5.8	181	1.35	235.8	**BF10Z-../D04LA4**	21	6400	-
0.11	5.3	198	1.2	257.4	**BF10Z-../D04LA4**	21	6400	-
0.11	4.8	215	1.1	283.1	**BF10Z-../D04LA4**	21	6400	-
0.11	4.2	250	0.96	324.3	**BF10Z-../D04LA4**	21	6400	-
0.11	3.8	275	0.87	356.6	**BF10Z-../D04LA4**	21	6400	-
0.11	3.6	290	0.83	380.2	**BF10Z-../D04LA4**	21	6400	-
0.11	3.2	280	0.93	424.5	**BF10G06-../D04LA4**	25	6400	-
0.11	2.6	260*	1.0	536.0	**BF10G06-../D04LA4**	25	6400	-
0.11	2.1	260*	1.0	643.8	**BF10G06-../D04LA4**	25	6400	-
0.11	1.8	260*	1.0	768.2	**BF10G06-../D04LA4**	25	6400	-
0.11	1.6	260*	1.0	845.1	**BF10G06-../D04LA4**	25	6400	-
0.11	1.4	260*	1.0	994.0	**BF10G06-../D04LA4**	25	6400	-
0.11	1.2	260*	1.0	1190	**BF10G06-../D04LA4**	25	6400	-
0.11	0.95	260*	1.0	1452	**BF10G06-../D04LA4**	25	6400	-
0.11	0.8	260*	1.0	1744	**BF10G06-../D04LA4**	25	6400	-
0.11	0.65	260*	1.0	2096	**BF10G06-../D04LA4**	25	6400	-
0.11	0.55	260*	1.0	2467	**BF10G06-../D04LA4**	25	6400	-
0.11	0.46	260*	1.0	2952	**BF10G06-../D04LA4**	25	6400	-
0.11	0.42	260*	1.0	3220	**BF10G06-../D04LA4**	25	6400	-
0.11	0.35	260*	1.0	3942	**BF10G06-../D04LA4**	25	6400	-
0.11	0.3	260*	1.0	4569	**BF10G06-../D04LA4**	25	6400	-
0.11	0.24	260*	1.0	5709	**BF10G06-../D04LA4**	25	6400	-
0.11	0.21	260*	1.0	6550	**BF10G06-../D04LA4**	25	6400	-
0.11	0.19	260*	1.0	7144	**BF10G06-../D04LA4**	25	6400	-
0.11	0.16	260*	1.0	8681	**BF10G06-../D04LA4**	25	6400	-
0.11	0.15	260*	1.0	9471	**BF10G06-../D04LA4**	25	6400	-
0.11	8.3	126	3.3	164.3	**BF20Z-../D04LA4**	28	7900	-
0.11	7.5	140	3.0	180.8	**BF20Z-../D04LA4**	28	7900	-
0.11	6.9	152	2.8	197.1	**BF20Z-../D04LA4**	28	7900	-
0.11	6.3	166	2.5	216.9	**BF20Z-../D04LA4**	28	7900	-
0.11	5.8	181	2.3	235.9	**BF20Z-../D04LA4**	28	7900	-
0.11	5.3	198	2.1	259.6	**BF20Z-../D04LA4**	28	7900	-
0.11	4.6	225	1.85	295.5	**BF20Z-../D04LA4**	28	7900	-
0.11	4.2	250	1.7	325.2	**BF20Z-../D04LA4**	28	7900	-
0.11	4.0	260	1.6	339.1	**BF20Z-../D04LA4**	28	7900	-
0.11	3.7	280	1.5	373.1	**BF20Z-../D04LA4**	28	7900	-
0.11	3.3	315	1.35	418.1	**BF20Z-../D04LA4**	28	7900	-
0.11	3.0	350	1.2	460.0	**BF20Z-../D04LA4**	28	7900	-
0.11	2.7	330	1.4	513.7	**BF20G06-../D04LA4**	31	7900	-
0.11	2.2	415	1.1	617.0	**BF20G06-../D04LA4**	31	7900	-

The torques marked (*) are maximum permissible torques for service factor f_B=1,0.

0.11 kW

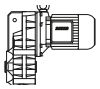

P_N	50 Hz			i	**Type**	m		
	n_2	M_2	f_B					
[kW]	[1/min]	[Nm]	[—]	[:1]		[kg]	[N]	[N]
0.11	1.9	490	0.94	736.1	**BF20G06-../D04LA4**	31	7900	-
0.11	1.7	550	0.84	810.0	**BF20G06-../D04LA4**	31	7900	-
0.11	1.5	460*	1.0	952.7	**BF20G06-../D04LA4**	31	7900	-
0.11	1.2	460*	1.0	1140	**BF20G06-../D04LA4**	31	7900	-
0.11	1.0	460*	1.0	1392	**BF20G06-../D04LA4**	31	7900	-
0.11	0.9	460*	1.0	1533	**BF20G06-../D04LA4**	31	7900	-
0.11	0.8	460*	1.0	1764	**BF20G06-../D04LA4**	31	7900	-
0.11	0.65	460*	1.0	2192	**BF20G06-../D04LA4**	31	7900	-
0.11	0.55	460*	1.0	2579	**BF20G06-../D04LA4**	31	7900	-
0.11	0.48	460*	1.0	2829	**BF20G06-../D04LA4**	31	7900	-
0.11	0.44	460*	1.0	3086	**BF20G06-../D04LA4**	31	7900	-
0.11	0.36	460*	1.0	3778	**BF20G06-../D04LA4**	31	7900	-
0.11	0.31	460*	1.0	4379	**BF20G06-../D04LA4**	31	7900	-
0.11	0.25	460*	1.0	5471	**BF20G06-../D04LA4**	31	7900	-
0.11	0.2	460*	1.0	6847	**BF20G06-../D04LA4**	31	7900	-
0.11	0.17	460*	1.0	8320	**BF20G06-../D04LA4**	31	7900	-
0.11	0.15	460*	1.0	9077	**BF20G06-../D04LA4**	31	7900	-
0.11	2.2	415	1.5	622.4	**BF30G06-../D04LA4**	41	7400	-
0.11	2.0	465	1.35	705.1	**BF30G06-../D04LA4**	41	7400	-
0.11	1.7	550	1.15	817.1	**BF30G06-../D04LA4**	41	7400	-
0.11	1.5	620	1.0	961.1	**BF30G06-../D04LA4**	41	7400	-
0.11	1.2	790	0.8	1150	**BF30G06-../D04LA4**	41	7400	-
0.11	1.1	630*	1.0	1286	**BF30G06-../D04LA4**	41	7400	-
0.11	1.0	630*	1.0	1404	**BF30G06-../D04LA4**	41	7400	-
0.11	0.85	630*	1.0	1686	**BF30G06-../D04LA4**	41	7400	-
0.11	0.7	630*	1.0	2026	**BF30G06-../D04LA4**	41	7400	-
0.11	0.6	630*	1.0	2386	**BF30G06-../D04LA4**	41	7400	-
0.11	0.48	630*	1.0	2854	**BF30G06-../D04LA4**	41	7400	-
0.11	0.39	630*	1.0	3493	**BF30G06-../D04LA4**	41	7400	-
0.11	0.36	630*	1.0	3811	**BF30G06-../D04LA4**	41	7400	-
0.11	0.31	630*	1.0	4417	**BF30G06-../D04LA4**	41	7400	-
0.11	0.27	630*	1.0	5060	**BF30G06-../D04LA4**	41	7400	-
0.11	0.22	630*	1.0	6333	**BF30G06-../D04LA4**	41	7400	-
0.11	0.19	630*	1.0	7206	**BF30G06-../D04LA4**	41	7400	-
0.11	0.18	630*	1.0	7861	**BF30G06-../D04LA4**	41	7400	-
0.11	0.15	630*	1.0	9157	**BF30G06-../D04LA4**	41	7400	-

0.12 kW

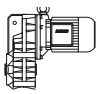

P_N	50 Hz			i	**Type**	m		
	n_2	M_2	f_B					
[kW]	[1/min]	[Nm]	[—]	[:1]		[kg]	[N]	[N]
0.12	151	7.5	9.3	9.21	**BF06-../DHE05LA4**	10	1900	-
0.12	116	9.8	7.7	12.07	**BF06-../DHE05LA4**	10	2000	-
0.12	98	11.6	7.3	14.21	**BF06-../DHE05LA4**	10	2100	-
0.12	82	13.9	6.8	16.99	**BF06-../DHE05LA4**	10	2500	-
0.12	69	16.6	5.7	20.42	**BF06-../DHE05LA4**	10	2700	-
0.12	52	22	4.3	26.76	**BF06-../DHE05LA4**	10	3000	-
0.12	44.5	25.5	3.7	31.50	**BF06-../DHE05LA4**	10	3200	-
0.12	37	30.5	3.1	37.69	**BF06-../DHE05LA4**	10	3500	-
0.12	30.5	37.5	2.5	46.14	**BF06-../DHE05LA4**	10	3800	-
0.12	24	47.5	2.0	58.33	**BF06-../DHE05LA4**	10	4000	-
0.12	21	54	1.75	66.82	**BF06-../DHE05LA4**	10	4000	-
0.12	17	67	1.4	83.61	**BF06-../DHE05LA4**	10	4000	-
0.12	15	76	1.25	95.16	**BF06-../DHE05LA4**	10	4000	-
0.12	13	88	0.92	110.8	**BF06-../DHE05LA4**	10	4000	-
0.12	15.5	73	3.3	90.91	**BF10-../DHE06LA4**	23	5400	-
0.12	14	81	3.0	99.97	**BF10-../DHE06LA4**	23	5600	-
0.12	12.5	91	2.6	112.3	**BF10-../DHE06LA4**	23	5900	-
0.12	11.5	99	2.4	123.5	**BF10-../DHE06LA4**	23	6100	-
0.12	11	104	2.3	128.9	**BF10-../DHE06LA4**	23	6200	-
0.12	9.8	116	2.1	141.8	**BF10-../DHE06LA4**	23	6400	-
0.12	9.2	124	1.95	151.2	**BF10Z-../DHE06LA4**	24	6400	-
0.12	8.4	136	1.75	166.2	**BF10Z-../DHE06LA4**	24	6400	-

The torques marked (*) are maximum permissible torques for service factor f_B=1,0.

0.12 kW

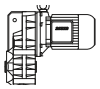

P_N	50 Hz			i	Type	m		
	n_2	M_2	f_B					
[kW]	[1/min]	[Nm]	[—]	[:1]		[kg]	[N]	[N]
0.12	7.7	148	1.6	180.1	**BF10Z-../DHE06LA4**	24	6400	-
0.12	7.0	163	1.45	198.0	**BF10Z-../DHE06LA4**	24	6400	-
0.12	6.5	176	1.35	214.5	**BF10Z-../DHE06LA4**	24	6400	-
0.12	5.9	194	1.25	235.8	**BF10Z-../DHE06LA4**	24	6400	-
0.12	5.4	210	1.15	257.4	**BF10Z-../DHE06LA4**	24	6400	-
0.12	4.9	230	1.05	283.1	**BF10Z-../DHE06LA4**	24	6400	-
0.12	4.3	265	0.91	324.3	**BF10Z-../DHE06LA4**	24	6400	-
0.12	3.9	290	0.83	356.6	**BF10Z-../DHE06LA4**	24	6400	-
0.12	3.7	265	0.98	377.9	**BF10G06-../DHE06LA4**	28	6400	-
0.12	3.3	300	0.87	424.5	**BF10G06-../DHE06LA4**	28	6400	-
0.12	2.6	260*	1.0	536.0	**BF10G06-../DHE06LA4**	28	6400	-
0.12	2.2	260*	1.0	643.8	**BF10G06-../DHE06LA4**	28	6400	-
0.12	1.9	260*	1.0	768.2	**BF10G06-../DHE06LA4**	28	6400	-
0.12	1.7	260*	1.0	845.1	**BF10G06-../DHE06LA4**	28	6400	-
0.12	1.4	260*	1.0	994.0	**BF10G06-../DHE06LA4**	28	6400	-
0.12	1.2	260*	1.0	1190	**BF10G06-../DHE06LA4**	28	6400	-
0.12	1.0	260*	1.0	1452	**BF10G06-../DHE06LA4**	28	6400	-
0.12	0.8	260*	1.0	1744	**BF10G06-../DHE06LA4**	28	6400	-
0.12	0.7	260*	1.0	2096	**BF10G06-../DHE06LA4**	28	6400	-
0.12	0.6	260*	1.0	2467	**BF10G06-../DHE06LA4**	28	6400	-
0.12	0.47	260*	1.0	2952	**BF10G06-../DHE06LA4**	28	6400	-
0.12	0.44	260*	1.0	3220	**BF10G06-../DHE06LA4**	28	6400	-
0.12	0.36	260*	1.0	3942	**BF10G06-../DHE06LA4**	28	6400	-
0.12	0.31	260*	1.0	4569	**BF10G06-../DHE06LA4**	28	6400	-
0.12	0.25	260*	1.0	5709	**BF10G06-../DHE06LA4**	28	6400	-
0.12	0.22	260*	1.0	6550	**BF10G06-../DHE06LA4**	28	6400	-
0.12	0.2	260*	1.0	7144	**BF10G06-../DHE06LA4**	28	6400	-
0.12	0.16	260*	1.0	8681	**BF10G06-../DHE06LA4**	28	6400	-
0.12	0.15	260*	1.0	9471	**BF10G06-../DHE06LA4**	28	6400	-
0.12	9.0	127	3.3	155.4	**BF20Z-../DHE06LA4**	31	7900	-
0.12	8.5	134	3.1	164.3	**BF20Z-../DHE06LA4**	31	7900	-
0.12	7.7	148	2.8	180.8	**BF20Z-../DHE06LA4**	31	7900	-
0.12	7.1	161	2.6	197.1	**BF20Z-../DHE06LA4**	31	7900	-
0.12	6.4	179	2.3	216.9	**BF20Z-../DHE06LA4**	31	7900	-
0.12	5.9	194	2.2	235.9	**BF20Z-../DHE06LA4**	31	7900	-
0.12	5.4	210	2.0	259.6	**BF20Z-../DHE06LA4**	31	7900	-
0.12	4.7	240	1.75	295.5	**BF20Z-../DHE06LA4**	31	7900	-
0.12	4.3	265	1.6	325.2	**BF20Z-../DHE06LA4**	31	7900	-
0.12	4.1	275	1.55	339.1	**BF20Z-../DHE06LA4**	31	7900	-
0.12	3.8	300	1.4	373.1	**BF20Z-../DHE06LA4**	31	7900	-
0.12	3.4	335	1.25	418.1	**BF20Z-../DHE06LA4**	31	7900	-
0.12	3.1	365	1.15	460.0	**BF20Z-../DHE06LA4**	31	7900	-
0.12	2.7	370	1.25	513.7	**BF20G06-../DHE06LA4**	34	7900	-
0.12	2.3	435	1.05	617.0	**BF20G06-../DHE06LA4**	34	7900	-
0.12	1.9	540	0.85	736.1	**BF20G06-../DHE06LA4**	34	7900	-
0.12	1.8	570	0.81	810.0	**BF20G06-../DHE06LA4**	34	7900	-
0.12	1.5	460*	1.0	952.7	**BF20G06-../DHE06LA4**	34	7900	-
0.12	1.3	460*	1.0	1140	**BF20G06-../DHE06LA4**	34	7900	-
0.12	1.0	460*	1.0	1392	**BF20G06-../DHE06LA4**	34	7900	-
0.12	0.95	460*	1.0	1533	**BF20G06-../DHE06LA4**	34	7900	-
0.12	0.8	460*	1.0	1764	**BF20G06-../DHE06LA4**	34	7900	-
0.12	0.65	460*	1.0	2192	**BF20G06-../DHE06LA4**	34	7900	-
0.12	0.55	460*	1.0	2579	**BF20G06-../DHE06LA4**	34	7900	-
0.12	0.49	460*	1.0	2829	**BF20G06-../DHE06LA4**	34	7900	-
0.12	0.45	460*	1.0	3086	**BF20G06-../DHE06LA4**	34	7900	-
0.12	0.37	460*	1.0	3778	**BF20G06-../DHE06LA4**	34	7900	-
0.12	0.32	460*	1.0	4379	**BF20G06-../DHE06LA4**	34	7900	-
0.12	0.26	460*	1.0	5471	**BF20G06-../DHE06LA4**	34	7900	-
0.12	0.21	460*	1.0	6847	**BF20G06-../DHE06LA4**	34	7900	-
0.12	0.17	460*	1.0	8320	**BF20G06-../DHE06LA4**	34	7900	-
0.12	0.16	460*	1.0	9077	**BF20G06-../DHE06LA4**	34	7900	-
0.12	6.2	184	3.1	224.8	**BF30Z-../DHE06LA4**	42	7400	-
0.12	5.7	200	2.9	247.3	**BF30Z-../DHE06LA4**	42	7400	-
0.12	5.3	215	2.7	263.5	**BF30Z-../DHE06LA4**	42	7400	-
0.12	4.8	235	2.4	289.8	**BF30Z-../DHE06LA4**	42	7400	-
0.12	4.5	250	2.3	310.7	**BF30Z-../DHE06LA4**	42	7400	-
0.12	4.1	275	2.1	341.8	**BF30Z-../DHE06LA4**	42	7400	-

The torques marked (*) are maximum permissible torques for service factor f_B=1,0.

0.12 kW

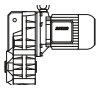

P_N	50 Hz			i	Type	m		
	n_2	M_2	f_B					
[kW]	[1/min]	[Nm]	[—]	[:1]		[kg]	[N]	[N]
0.12	3.7	305	1.9	375.1	**BF30Z-../DHE06LA4**	42	7400	-
0.12	3.4	335	1.7	412.6	**BF30Z-../DHE06LA4**	42	7400	-
0.12	3.0	380	1.5	463.3	**BF30Z-../DHE06LA4**	42	7400	-
0.12	2.8	405	1.4	509.6	**BF30Z-../DHE06LA4**	42	7400	-
0.12	2.6	440	1.3	537.0	**BF30Z-../DHE06LA4**	42	7400	-
0.12	2.4	475	1.2	590.7	**BF30Z-../DHE06LA4**	42	7400	-
0.12	2.3	435	1.45	622.4	**BF30G06-../DHE06LA4**	45	7400	-
0.12	2.0	510	1.25	705.1	**BF30G06-../DHE06LA4**	45	7400	-
0.12	1.7	600	1.05	817.1	**BF30G06-../DHE06LA4**	45	7400	-
0.12	1.5	690	0.91	961.1	**BF30G06-../DHE06LA4**	45	7400	-
0.12	1.3	630*	1.0	1150	**BF30G06-../DHE06LA4**	45	7400	-
0.12	1.1	630*	1.0	1286	**BF30G06-../DHE06LA4**	45	7400	-
0.12	1.0	630*	1.0	1404	**BF30G06-../DHE06LA4**	45	7400	-
0.12	0.85	630*	1.0	1686	**BF30G06-../DHE06LA4**	45	7400	-
0.12	0.7	630*	1.0	2026	**BF30G06-../DHE06LA4**	45	7400	-
0.12	0.6	630*	1.0	2386	**BF30G06-../DHE06LA4**	45	7400	-
0.12	0.49	630*	1.0	2854	**BF30G06-../DHE06LA4**	45	7400	-
0.12	0.4	630*	1.0	3493	**BF30G06-../DHE06LA4**	45	7400	-
0.12	0.37	630*	1.0	3811	**BF30G06-../DHE06LA4**	45	7400	-
0.12	0.32	630*	1.0	4417	**BF30G06-../DHE06LA4**	45	7400	-
0.12	0.28	630*	1.0	5060	**BF30G06-../DHE06LA4**	45	7400	-
0.12	0.22	630*	1.0	6333	**BF30G06-../DHE06LA4**	45	7400	-
0.12	0.2	630*	1.0	7206	**BF30G06-../DHE06LA4**	45	7400	-
0.12	0.18	630*	1.0	7861	**BF30G06-../DHE06LA4**	45	7400	-
0.12	0.16	630*	1.0	9157	**BF30G06-../DHE06LA4**	45	7400	-
0.12	4.0	285	3.2	346.8	**BF40Z-../DHE06LA4**	53	10600	-
0.12	3.7	305	3.0	381.5	**BF40Z-../DHE06LA4**	53	10600	-
0.12	3.4	335	2.7	417.3	**BF40Z-../DHE06LA4**	53	10600	-
0.12	3.1	365	2.5	459.1	**BF40Z-../DHE06LA4**	53	10600	-
0.12	2.7	420	2.1	514.6	**BF40Z-../DHE06LA4**	53	10600	-
0.12	2.5	455	2.0	566.1	**BF40Z-../DHE06LA4**	53	10600	-
0.12	1.9	395	2.5	731.6	**BF40G10-../DHE06LA4**	58	10600	-
0.12	1.5	540	1.85	928.9	**BF40G10-../DHE06LA4**	58	10600	-
0.12	1.3	640	1.55	1106	**BF40G10-../DHE06LA4**	58	10600	-
0.12	1.1	800	1.25	1324	**BF40G10-../DHE06LA4**	58	10600	-
0.12	0.95	940	1.05	1484	**BF40G10-../DHE06LA4**	58	10600	-
0.12	0.8	1000*	1.0	1810	**BF40G10-../DHE06LA4**	58	10600	-
0.12	0.7	1000*	1.0	1997	**BF40G10-../DHE06LA4**	58	10600	-
0.12	0.55	1000*	1.0	2536	**BF40G10-../DHE06LA4**	58	10600	-
0.12	0.5	1000*	1.0	2810	**BF40G10-../DHE06LA4**	58	10600	-
0.12	0.42	1000*	1.0	3346	**BF40G10-../DHE06LA4**	58	10600	-
0.12	0.35	1000*	1.0	3985	**BF40G10-../DHE06LA4**	58	10600	-
0.12	0.29	1000*	1.0	4784	**BF40G10-../DHE06LA4**	58	10600	-
0.12	0.26	1000*	1.0	5439	**BF40G10-../DHE06LA4**	58	10600	-
0.12	0.22	1000*	1.0	6377	**BF40G10-../DHE06LA4**	58	10600	-
0.12	0.18	1000*	1.0	7875	**BF40G10-../DHE06LA4**	58	10600	-
0.12	0.16	1000*	1.0	9042	**BF40G10-../DHE06LA4**	58	10600	-
0.12	2.8	405	3.2	496.4	**BF50Z-../DHE06LA4**	82	13600	-
0.12	2.5	455	2.9	555.2	**BF50Z-../DHE06LA4**	82	13600	-
0.12	1.7	465	3.0	864.5	**BF50G10-../DHE06LA4**	86	13600	-
0.12	1.4	590	2.4	1029	**BF50G10-../DHE06LA4**	86	13600	-
0.12	1.2	740	1.9	1203	**BF50G10-../DHE06LA4**	86	13600	-
0.12	1.1	800	1.75	1359	**BF50G10-../DHE06LA4**	86	13600	-
0.12	0.95	930	1.5	1520	**BF50G10-../DHE06LA4**	86	13600	-
0.12	0.85	1060	1.3	1684	**BF50G10-../DHE06LA4**	86	13600	-
0.12	0.7	1330	1.05	2059	**BF50G10-../DHE06LA4**	86	13600	-
0.12	0.6	1400*	1.0	2360	**BF50G10-../DHE06LA4**	86	13600	-
0.12	0.5	1400*	1.0	2810	**BF50G10-../DHE06LA4**	86	13600	-
0.12	0.42	1400*	1.0	3348	**BF50G10-../DHE06LA4**	86	13600	-
0.12	0.35	1400*	1.0	4019	**BF50G10-../DHE06LA4**	86	13600	-
0.12	0.28	1400*	1.0	5062	**BF50G10-../DHE06LA4**	86	13600	-
0.12	0.24	1400*	1.0	5935	**BF50G10-../DHE06LA4**	86	13600	-
0.12	0.19	1400*	1.0	7329	**BF50G10-../DHE06LA4**	86	13600	-
0.12	0.18	1400*	1.0	8120	**BF50G10-../DHE06LA4**	86	13600	-
0.12	0.15	1400*	1.0	9324	**BF50G10-../DHE06LA4**	86	13600	-
0.12	0.95	820	3.0	1494	**BF60G20-../DHE06LA4**	134	15300	43300
0.12	0.85	920	2.7	1658	**BF60G20-../DHE06LA4**	134	15300	43300

The torques marked (*) are maximum permissible torques for service factor f_B=1,0.

0.12 kW

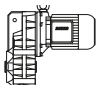

P_N	50 Hz			i	Type	m		
	n_2	M_2	f_B					
[kW]	[1/min]	[Nm]	[—]	[:1]		[kg]	[N]	[N]
0.12	0.75	1080	2.3	1955	**BF60G20-../DHE06LA4**	134	15300	43300
0.12	0.65	1300	1.9	2172	**BF60G20-../DHE06LA4**	134	15300	43300
0.12	0.5	1790	1.4	2781	**BF60G20-../DHE06LA4**	134	15300	43300
0.12	0.43	2150	1.15	3237	**BF60G20-../DHE06LA4**	134	15300	43300
0.12	0.36	2500*	1.0	3883	**BF60G20-../DHE06LA4**	134	15300	43300
0.12	0.3	2500*	1.0	4646	**BF60G20-../DHE06LA4**	134	15300	43300
0.12	0.27	2500*	1.0	5241	**BF60G20-../DHE06LA4**	134	15300	43300
0.12	0.24	2500*	1.0	6014	**BF60G20-../DHE06LA4**	134	15300	43300
0.12	0.21	2500*	1.0	6679	**BF60G20-../DHE06LA4**	134	15300	43300
0.12	0.17	2500*	1.0	8235	**BF60G20-../DHE06LA4**	134	15300	43300
0.12	0.49	1840	3.1	2849	**BF70G20-../DHE06LA4**	212	16100	47700
0.12	0.41	2300	2.5	3417	**BF70G20-../DHE06LA4**	212	16100	47700
0.12	0.34	2850	2.0	4090	**BF70G20-../DHE06LA4**	212	16100	47700
0.12	0.31	3200	1.8	4542	**BF70G20-../DHE06LA4**	212	16100	47700
0.12	0.28	3600	1.6	5124	**BF70G20-../DHE06LA4**	212	16100	47700
0.12	0.25	4050	1.4	5691	**BF70G20-../DHE06LA4**	212	16100	47700
0.12	0.22	4700	1.2	6530	**BF70G20-../DHE06LA4**	212	16100	47700
0.12	0.2	5200	1.1	7248	**BF70G20-../DHE06LA4**	212	16100	47700
0.12	0.18	5700*	1.0	8052	**BF70G20-../DHE06LA4**	212	16100	47700

0.18 kW

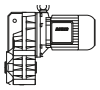

P_N	50 Hz			i	Type	m		
	n_2	M_2	f_B					
[kW]	[1/min]	[Nm]	[—]	[:1]		[kg]	[N]	[N]
0.18	180	9.5	7.2	7.66	**BF06-../DHE05LA4**	10	1800	-
0.18	150	11.4	6.1	9.21	**BF06-../DHE05LA4**	10	1900	-
0.18	114	15	5.0	12.07	**BF06-../DHE05LA4**	10	2000	-
0.18	97	17.7	4.8	14.21	**BF06-../DHE05LA4**	10	2100	-
0.18	81	21	4.5	16.99	**BF06-../DHE05LA4**	10	2500	-
0.18	68	25	3.8	20.42	**BF06-../DHE05LA4**	10	2700	-
0.18	52	33	2.9	26.76	**BF06-../DHE05LA4**	10	3000	-
0.18	44	39	2.4	31.50	**BF06-../DHE05LA4**	10	3200	-
0.18	36.5	47	2.0	37.69	**BF06-../DHE05LA4**	10	3500	-
0.18	30	57	1.65	46.14	**BF06-../DHE05LA4**	10	3800	-
0.18	24	71	1.35	58.33	**BF06-../DHE05LA4**	10	4000	-
0.18	21	81	1.15	66.82	**BF06-../DHE05LA4**	10	4000	-
0.18	16.5	104	0.91	83.61	**BF06-../DHE05LA4**	10	4000	-
0.18	14.5	118	0.81	95.16	**BF06-../DHE05LA4**	10	4000	-
0.18	22.5	76	3.2	61.55	**BF10-../DHE06LA4**	23	4700	-
0.18	20.5	83	2.9	67.69	**BF10-../DHE06LA4**	23	4900	-
0.18	18	95	2.5	77.55	**BF10-../DHE06LA4**	23	5100	-
0.18	16.5	104	2.3	85.27	**BF10-../DHE06LA4**	23	5300	-
0.18	15.5	110	2.2	90.91	**BF10-../DHE06LA4**	23	5400	-
0.18	14	122	1.95	99.97	**BF10-../DHE06LA4**	23	5600	-
0.18	12.5	137	1.75	112.3	**BF10-../DHE06LA4**	23	5900	-
0.18	11.5	149	1.6	123.5	**BF10-../DHE06LA4**	23	6100	-
0.18	11	156	1.55	128.9	**BF10-../DHE06LA4**	23	6200	-
0.18	9.7	177	1.35	141.8	**BF10-../DHE06LA4**	23	6400	-
0.18	9.1	188	1.3	151.2	**BF10Z-../DHE06LA4**	24	6400	-
0.18	8.3	205	1.15	166.2	**BF10Z-../DHE06LA4**	24	6400	-
0.18	7.7	220	1.1	180.1	**BF10Z-../DHE06LA4**	24	6400	-
0.18	7.0	245	0.98	198.0	**BF10Z-../DHE06LA4**	24	6400	-
0.18	6.4	265	0.91	214.5	**BF10Z-../DHE06LA4**	24	6400	-
0.18	5.9	290	0.83	235.8	**BF10Z-../DHE06LA4**	24	6400	-
0.18	12.5	137	3.1	110.2	**BF20-../DHE06LA4**	30	7300	-
0.18	11.5	149	2.8	123.5	**BF20-../DHE06LA4**	30	7600	-
0.18	10.5	163	2.6	135.9	**BF20-../DHE06LA4**	30	7900	-
0.18	9.8	175	2.4	141.2	**BF20Z-../DHE06LA4**	31	7900	-
0.18	8.9	193	2.2	155.4	**BF20Z-../DHE06LA4**	31	7900	-
0.18	8.4	200	2.1	164.3	**BF20Z-../DHE06LA4**	31	7900	-
0.18	7.6	225	1.85	180.8	**BF20Z-../DHE06LA4**	31	7900	-
0.18	7.0	245	1.7	197.1	**BF20Z-../DHE06LA4**	31	7900	-

The torques marked (*) are maximum permissible torques for service factor f_B=1,0.

0.18 kW

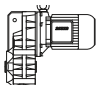

P_N	50 Hz			i	Type	m		
	n_2	M_2	f_B					
[kW]	[1/min]	[Nm]	[—]	[:1]		[kg]	[N]	[N]
0.18	6.4	265	1.6	216.9	**BF20Z-../DHE06LA4**	31	7900	-
0.18	5.9	290	1.45	235.9	**BF20Z-../DHE06LA4**	31	7900	-
0.18	5.3	320	1.3	259.6	**BF20Z-../DHE06LA4**	31	7900	-
0.18	4.7	365	1.15	295.5	**BF20Z-../DHE06LA4**	31	7900	-
0.18	4.3	395	1.05	325.2	**BF20Z-../DHE06LA4**	31	7900	-
0.18	4.1	415	1.0	339.1	**BF20Z-../DHE06LA4**	31	7900	-
0.18	3.7	460	0.91	373.1	**BF20Z-../DHE06LA4**	31	7900	-
0.18	3.3	520	0.81	418.1	**BF20Z-../DHE06LA4**	31	7900	-
0.18	9.1	188	3.1	150.7	**BF30Z-../DHE06LA4**	42	7400	-
0.18	8.3	205	2.8	165.8	**BF30Z-../DHE06LA4**	42	7400	-
0.18	7.8	220	2.6	176.6	**BF30Z-../DHE06LA4**	42	7400	-
0.18	7.1	240	2.4	194.3	**BF30Z-../DHE06LA4**	42	7400	-
0.18	6.1	280	2.1	224.8	**BF30Z-../DHE06LA4**	42	7400	-
0.18	5.6	305	1.9	247.3	**BF30Z-../DHE06LA4**	42	7400	-
0.18	5.2	330	1.75	263.5	**BF30Z-../DHE06LA4**	42	7400	-
0.18	4.8	355	1.6	289.8	**BF30Z-../DHE06LA4**	42	7400	-
0.18	4.5	380	1.5	310.7	**BF30Z-../DHE06LA4**	42	7400	-
0.18	4.1	415	1.4	341.8	**BF30Z-../DHE06LA4**	42	7400	-
0.18	3.7	460	1.25	375.1	**BF30Z-../DHE06LA4**	42	7400	-
0.18	3.4	500	1.15	412.6	**BF30Z-../DHE06LA4**	42	7400	-
0.18	3.0	570	1.0	463.3	**BF30Z-../DHE06LA4**	42	7400	-
0.18	2.6	660	0.87	537.0	**BF30Z-../DHE06LA4**	42	7400	-
0.18	2.4	710	0.81	590.7	**BF30Z-../DHE06LA4**	42	7400	-
0.18	2.3	680	0.93	622.4	**BF30G06-../DHE06LA4**	45	7400	-
0.18	6.2	275	3.3	222.4	**BF40Z-../DHE06LA4**	53	10600	-
0.18	5.5	310	2.9	253.2	**BF40Z-../DHE06LA4**	53	10600	-
0.18	5.0	340	2.6	278.5	**BF40Z-../DHE06LA4**	53	10600	-
0.18	4.7	365	2.5	295.1	**BF40Z-../DHE06LA4**	53	10600	-
0.18	4.3	395	2.3	324.7	**BF40Z-../DHE06LA4**	53	10600	-
0.18	4.0	425	2.1	346.8	**BF40Z-../DHE06LA4**	53	10600	-
0.18	3.6	475	1.9	381.5	**BF40Z-../DHE06LA4**	53	10600	-
0.18	3.3	520	1.75	417.3	**BF40Z-../DHE06LA4**	53	10600	-
0.18	3.0	570	1.6	459.1	**BF40Z-../DHE06LA4**	53	10600	-
0.18	2.7	630	1.45	514.6	**BF40Z-../DHE06LA4**	53	10600	-
0.18	2.5	680	1.3	566.1	**BF40Z-../DHE06LA4**	53	10600	-
0.18	2.3	560	1.8	597.3	**BF40G10-../DHE06LA4**	58	10600	-
0.18	1.9	690	1.45	731.6	**BF40G10-../DHE06LA4**	58	10600	-
0.18	1.5	920	1.1	928.9	**BF40G10-../DHE06LA4**	58	10600	-
0.18	1.3	1080	0.93	1106	**BF40G10-../DHE06LA4**	58	10600	-
0.18	4.4	390	3.3	316.6	**BF50Z-../DHE06LA4**	82	13600	-
0.18	3.9	440	3.0	354.0	**BF50Z-../DHE06LA4**	82	13600	-
0.18	3.5	490	2.7	392.8	**BF50Z-../DHE06LA4**	82	13600	-
0.18	3.2	530	2.5	439.3	**BF50Z-../DHE06LA4**	82	13600	-
0.18	2.8	610	2.1	496.4	**BF50Z-../DHE06LA4**	82	13600	-
0.18	2.5	680	1.9	555.2	**BF50Z-../DHE06LA4**	82	13600	-
0.18	2.1	620	2.3	680.9	**BF50G10-../DHE06LA4**	86	13600	-
0.18	1.6	860	1.65	864.5	**BF50G10-../DHE06LA4**	86	13600	-
0.18	1.4	1000	1.4	1029	**BF50G10-../DHE06LA4**	86	13600	-
0.18	1.2	1220	1.15	1203	**BF50G10-../DHE06LA4**	86	13600	-
0.18	1.1	1320	1.05	1359	**BF50G10-../DHE06LA4**	86	13600	-
0.18	1.5	870	2.9	937.6	**BF60G20-../DHE06LA4**	134	15300	43300
0.18	1.2	1120	2.2	1211	**BF60G20-../DHE06LA4**	134	15300	43300
0.18	0.95	1430	1.75	1494	**BF60G20-../DHE06LA4**	134	15300	43300
0.18	0.85	1600	1.55	1658	**BF60G20-../DHE06LA4**	134	15300	43300
0.18	0.75	1840	1.35	1955	**BF60G20-../DHE06LA4**	134	15300	43300
0.18	0.65	2150	1.15	2172	**BF60G20-../DHE06LA4**	134	15300	43300
0.18	0.75	1850	3.1	1912	**BF70G20-../DHE06LA4**	212	16100	47700
0.18	0.6	2350	2.4	2448	**BF70G20-../DHE06LA4**	212	16100	47700
0.18	0.49	3000	1.9	2849	**BF70G20-../DHE06LA4**	212	16100	47700
0.18	0.41	3700	1.55	3417	**BF70G20-../DHE06LA4**	212	16100	47700
0.18	0.34	4550	1.25	4090	**BF70G20-../DHE06LA4**	212	16100	47700
0.18	0.31	5000	1.15	4542	**BF70G20-../DHE06LA4**	212	16100	47700

The torques marked (*) are maximum permissible torques for service factor f_B=1,0.

0.25 kW

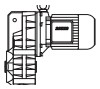

P_N	50 Hz			i	Type	m		
	n_2	M_2	f_B					
[kW]	[1/min]	[Nm]	[—]	[:1]		[kg]	[N]	[N]
0.25	180	13.2	5.2	7.66	**BF06-../DHE07LA4**	14	1800	-
0.25	150	15.9	4.4	9.21	**BF06-../DHE07LA4**	14	1900	-
0.25	114	20.5	3.7	12.07	**BF06-../DHE07LA4**	14	2000	-
0.25	97	24.5	3.5	14.21	**BF06-../DHE07LA4**	14	2100	-
0.25	81	29	3.3	16.99	**BF06-../DHE07LA4**	14	2500	-
0.25	68	35	2.7	20.42	**BF06-../DHE07LA4**	14	2700	-
0.25	52	45.5	2.1	26.76	**BF06-../DHE07LA4**	14	3000	-
0.25	44	54	1.75	31.50	**BF06-../DHE07LA4**	14	3200	-
0.25	36.5	65	1.45	37.69	**BF06-../DHE07LA4**	14	3500	-
0.25	30	79	1.2	46.14	**BF06-../DHE07LA4**	14	3800	-
0.25	24	99	0.96	58.33	**BF06-../DHE07LA4**	14	4000	-
0.25	21	113	0.84	66.82	**BF06-../DHE07LA4**	14	4000	-
0.25	32	74	3.2	43.06	**BF10-../DHE07LA4**	26	4100	-
0.25	29.5	80	3.0	47.35	**BF10-../DHE07LA4**	26	4250	-
0.25	27	88	2.7	51.28	**BF10-../DHE07LA4**	26	4400	-
0.25	24.5	97	2.5	56.39	**BF10-../DHE07LA4**	26	4550	-
0.25	22.5	106	2.3	61.55	**BF10-../DHE07LA4**	26	4700	-
0.25	20.5	116	2.1	67.69	**BF10-../DHE07LA4**	26	4900	-
0.25	18	132	1.8	77.55	**BF10-../DHE07LA4**	26	5100	-
0.25	16.5	144	1.65	85.27	**BF10-../DHE07LA4**	26	5300	-
0.25	15.5	154	1.55	90.91	**BF10-../DHE07LA4**	26	5400	-
0.25	14	170	1.4	99.97	**BF10-../DHE07LA4**	26	5600	-
0.25	12.5	191	1.25	112.3	**BF10-../DHE07LA4**	26	5900	-
0.25	11.5	205	1.15	123.5	**BF10-../DHE07LA4**	26	6100	-
0.25	11	215	1.1	128.9	**BF10-../DHE07LA4**	26	6200	-
0.25	9.7	245	0.98	141.8	**BF10-../DHE07LA4**	26	6400	-
0.25	9.1	260	0.92	151.2	**BF10Z-../DHE07LA4**	27	6400	-
0.25	8.3	285	0.84	166.2	**BF10Z-../DHE07LA4**	27	6400	-
0.25	18	132	3.2	76.69	**BF20-../DHE07LA4**	32	6300	-
0.25	16	149	2.8	87.31	**BF20-../DHE07LA4**	32	6600	-
0.25	14	170	2.5	100.2	**BF20-../DHE07LA4**	32	7000	-
0.25	12.5	191	2.2	110.2	**BF20-../DHE07LA4**	32	7300	-
0.25	11.5	205	2.0	123.5	**BF20-../DHE07LA4**	32	7600	-
0.25	10.5	225	1.85	135.9	**BF20-../DHE07LA4**	32	7900	-
0.25	9.8	240	1.75	141.2	**BF20Z-../DHE07LA4**	34	7900	-
0.25	8.9	265	1.6	155.4	**BF20Z-../DHE07LA4**	34	7900	-
0.25	8.4	280	1.5	164.3	**BF20Z-../DHE07LA4**	34	7900	-
0.25	7.7	310	1.35	180.8	**BF20Z-../DHE07LA4**	34	7900	-
0.25	7.0	340	1.25	197.1	**BF20Z-../DHE07LA4**	34	7900	-
0.25	6.4	370	1.15	216.9	**BF20Z-../DHE07LA4**	34	7900	-
0.25	5.9	400	1.05	235.9	**BF20Z-../DHE07LA4**	34	7900	-
0.25	5.3	450	0.93	259.6	**BF20Z-../DHE07LA4**	34	7900	-
0.25	4.7	500	0.84	295.5	**BF20Z-../DHE07LA4**	34	7900	-
0.25	13	183	3.1	107.6	**BF30-../DHE07LA4**	42	6700	-
0.25	12	198	2.9	118.3	**BF30-../DHE07LA4**	42	7000	-
0.25	11.5	205	2.8	124.7	**BF30-../DHE07LA4**	42	7100	-
0.25	10.5	225	2.6	137.1	**BF30-../DHE07LA4**	42	7400	-
0.25	9.2	255	2.3	150.7	**BF30Z-../DHE07LA4**	45	7400	-
0.25	8.3	285	2.0	165.8	**BF30Z-../DHE07LA4**	45	7400	-
0.25	7.8	305	1.9	176.6	**BF30Z-../DHE07LA4**	45	7400	-
0.25	7.1	335	1.7	194.3	**BF30Z-../DHE07LA4**	45	7400	-
0.25	6.2	385	1.5	224.8	**BF30Z-../DHE07LA4**	45	7400	-
0.25	5.6	425	1.35	247.3	**BF30Z-../DHE07LA4**	45	7400	-
0.25	5.3	450	1.3	263.5	**BF30Z-../DHE07LA4**	45	7400	-
0.25	4.8	495	1.15	289.8	**BF30Z-../DHE07LA4**	45	7400	-
0.25	4.5	530	1.1	310.7	**BF30Z-../DHE07LA4**	45	7400	-
0.25	4.1	580	0.99	341.8	**BF30Z-../DHE07LA4**	45	7400	-
0.25	3.7	640	0.9	375.1	**BF30Z-../DHE07LA4**	45	7400	-
0.25	3.4	700	0.82	412.6	**BF30Z-../DHE07LA4**	45	7400	-
0.25	8.1	290	3.1	171.2	**BF40Z-../DHE07LA4**	55	10600	-
0.25	7.4	320	2.8	188.3	**BF40Z-../DHE07LA4**	55	10600	-
0.25	6.9	345	2.6	202.2	**BF40Z-../DHE07LA4**	55	10600	-
0.25	6.2	385	2.3	222.4	**BF40Z-../DHE07LA4**	55	10600	-
0.25	5.5	430	2.1	253.2	**BF40Z-../DHE07LA4**	55	10600	-
0.25	5.0	475	1.9	278.5	**BF40Z-../DHE07LA4**	55	10600	-
0.25	4.7	500	1.8	295.1	**BF40Z-../DHE07LA4**	55	10600	-

The torques marked (*) are maximum permissible torques for service factor f_B=1,0.

0.25 kW

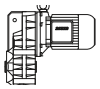

P_N	50 Hz			i	Type	m		
	n_2	M_2	f_B					
[kW]	[1/min]	[Nm]	[—]	[:1]		[kg]	[N]	[N]
0.25	4.3	550	1.65	324.7	**BF40Z-../DHE07LA4**	55	10600	-
0.25	4.0	590	1.55	346.8	**BF40Z-../DHE07LA4**	55	10600	-
0.25	3.7	640	1.4	381.5	**BF40Z-../DHE07LA4**	55	10600	-
0.25	3.3	720	1.25	417.3	**BF40Z-../DHE07LA4**	55	10600	-
0.25	3.0	790	1.15	459.1	**BF40Z-../DHE07LA4**	55	10600	-
0.25	2.7	880	1.0	514.6	**BF40Z-../DHE07LA4**	55	10600	-
0.25	2.5	950	0.95	566.1	**BF40Z-../DHE07LA4**	55	10600	-
0.25	2.4	800	1.25	597.3	**BF40G10-../DHE07LA4**	61	10600	-
0.25	1.9	1050	0.95	731.6	**BF40G10-../DHE07LA4**	61	10600	-
0.25	5.6	425	3.1	247.5	**BF50Z-../DHE07LA4**	85	13600	-
0.25	5.0	475	2.7	276.8	**BF50Z-../DHE07LA4**	85	13600	-
0.25	4.4	540	2.4	316.6	**BF50Z-../DHE07LA4**	85	13600	-
0.25	3.9	610	2.1	354.0	**BF50Z-../DHE07LA4**	85	13600	-
0.25	3.6	660	1.95	392.8	**BF50Z-../DHE07LA4**	85	13600	-
0.25	3.2	740	1.75	439.3	**BF50Z-../DHE07LA4**	85	13600	-
0.25	2.8	850	1.55	496.4	**BF50Z-../DHE07LA4**	85	13600	-
0.25	2.5	950	1.35	555.2	**BF50Z-../DHE07LA4**	85	13600	-
0.25	2.1	940	1.5	680.9	**BF50G10-../DHE07LA4**	89	13600	-
0.25	1.6	1280	1.1	864.5	**BF50G10-../DHE07LA4**	89	13600	-
0.25	1.4	1480	0.95	1029	**BF50G10-../DHE07LA4**	89	13600	-
0.25	2.0	900	2.8	689.0	**BF60G20-../DHE07LA4**	136	15300	43300
0.25	1.7	1090	2.3	813.2	**BF60G20-../DHE07LA4**	136	15300	43300
0.25	1.5	1310	1.9	937.6	**BF60G20-../DHE07LA4**	136	15300	43300
0.25	1.2	1680	1.5	1211	**BF60G20-../DHE07LA4**	136	15300	43300
0.25	0.95	2100	1.2	1494	**BF60G20-../DHE07LA4**	136	15300	43300
0.25	0.85	2350	1.05	1658	**BF60G20-../DHE07LA4**	136	15300	43300
0.25	1.0	2000	2.9	1390	**BF70G20-../DHE07LA4**	215	16100	47700
0.25	0.85	2350	2.4	1621	**BF70G20-../DHE07LA4**	215	16100	47700
0.25	0.75	2700	2.1	1912	**BF70G20-../DHE07LA4**	215	16100	47700
0.25	0.6	3500	1.65	2448	**BF70G20-../DHE07LA4**	215	16100	47700
0.25	0.49	4350	1.3	2849	**BF70G20-../DHE07LA4**	215	16100	47700
0.25	0.41	5300	1.1	3417	**BF70G20-../DHE07LA4**	215	16100	47700

0.3 kW

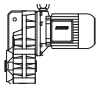

P_N	50 Hz			i	Type	m		
	n_2	M_2	f_B					
[kW]	[1/min]	[Nm]	[—]	[:1]		[kg]	[N]	[N]
0.3	178	16	4.3	7.66	**BF06-../DHE07LA4**	14	1800	-
0.3	148	19.3	3.6	9.21	**BF06-../DHE07LA4**	14	1900	-
0.3	113	25	3.0	12.07	**BF06-../DHE07LA4**	14	2000	-
0.3	96	29.5	2.9	14.21	**BF06-../DHE07LA4**	14	2100	-
0.3	81	35	2.7	16.99	**BF06-../DHE07LA4**	14	2500	-
0.3	67	42.5	2.2	20.42	**BF06-../DHE07LA4**	14	2700	-
0.3	51	56	1.7	26.76	**BF06-../DHE07LA4**	14	3000	-
0.3	43.5	65	1.45	31.50	**BF06-../DHE07LA4**	14	3200	-
0.3	36.5	78	1.2	37.69	**BF06-../DHE07LA4**	14	3500	-
0.3	29.5	97	0.98	46.14	**BF06-../DHE07LA4**	14	3800	-
0.3	38	75	3.2	36.15	**BF10-../DHE07LA4**	26	3800	-
0.3	34.5	83	2.9	39.75	**BF10-../DHE07LA4**	26	3950	-
0.3	32	89	2.7	43.06	**BF10-../DHE07LA4**	26	4100	-
0.3	29	98	2.4	47.35	**BF10-../DHE07LA4**	26	4250	-
0.3	27	106	2.3	51.28	**BF10-../DHE07LA4**	26	4400	-
0.3	24.5	116	2.1	56.39	**BF10-../DHE07LA4**	26	4550	-
0.3	22.5	127	1.9	61.55	**BF10-../DHE07LA4**	26	4700	-
0.3	20.5	139	1.75	67.69	**BF10-../DHE07LA4**	26	4900	-
0.3	18	159	1.5	77.55	**BF10-../DHE07LA4**	26	5100	-
0.3	16	179	1.35	85.27	**BF10-../DHE07LA4**	26	5300	-
0.3	15	191	1.25	90.91	**BF10-../DHE07LA4**	26	5400	-
0.3	14	200	1.2	99.97	**BF10-../DHE07LA4**	26	5600	-
0.3	12.5	225	1.05	112.3	**BF10-../DHE07LA4**	26	5900	-
0.3	11.5	245	0.98	123.5	**BF10-../DHE07LA4**	26	6100	-

The torques marked (*) are maximum permissible torques for service factor f_B=1,0.

0.3 kW

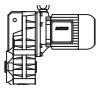

P_N	50 Hz			i	Type	m		
	n_2	M_2	f_B					
[kW]	[1/min]	[Nm]	[—]	[:1]		[kg]	[N]	[N]
0.3	11	260	0.92	128.9	**BF10-../DHE07LA4**	26	6200	-
0.3	9.6	295	0.81	141.8	**BF10-../DHE07LA4**	26	6400	-
0.3	21.5	133	3.2	64.08	**BF20-../DHE07LA4**	32	5900	-
0.3	20	143	2.9	69.70	**BF20-../DHE07LA4**	32	6100	-
0.3	18	159	2.6	76.69	**BF20-../DHE07LA4**	32	6300	-
0.3	16	179	2.3	87.31	**BF20-../DHE07LA4**	32	6600	-
0.3	14	200	2.1	100.2	**BF20-../DHE07LA4**	32	7000	-
0.3	12.5	225	1.85	110.2	**BF20-../DHE07LA4**	32	7300	-
0.3	11.5	245	1.7	123.5	**BF20-../DHE07LA4**	32	7600	-
0.3	10.5	270	1.55	135.9	**BF20-../DHE07LA4**	32	7900	-
0.3	9.7	295	1.4	141.2	**BF20Z-../DHE07LA4**	34	7900	-
0.3	8.8	325	1.3	155.4	**BF20Z-../DHE07LA4**	34	7900	-
0.3	8.3	345	1.2	164.3	**BF20Z-../DHE07LA4**	34	7900	-
0.3	7.6	375	1.1	180.8	**BF20Z-../DHE07LA4**	34	7900	-
0.3	7.0	405	1.05	197.1	**BF20Z-../DHE07LA4**	34	7900	-
0.3	6.3	450	0.93	216.9	**BF20Z-../DHE07LA4**	34	7900	-
0.3	5.8	490	0.86	235.9	**BF20Z-../DHE07LA4**	34	7900	-
0.3	16	179	3.2	87.08	**BF30-../DHE07LA4**	42	6200	-
0.3	14.5	197	2.9	95.79	**BF30-../DHE07LA4**	42	6400	-
0.3	13	220	2.6	107.6	**BF30-../DHE07LA4**	42	6700	-
0.3	11.5	245	2.3	118.3	**BF30-../DHE07LA4**	42	7000	-
0.3	11	260	2.2	124.7	**BF30-../DHE07LA4**	42	7100	-
0.3	10	285	2.0	137.1	**BF30-../DHE07LA4**	42	7400	-
0.3	9.1	310	1.85	150.7	**BF30Z-../DHE07LA4**	45	7400	-
0.3	8.3	345	1.65	165.8	**BF30Z-../DHE07LA4**	45	7400	-
0.3	7.8	365	1.6	176.6	**BF30Z-../DHE07LA4**	45	7400	-
0.3	7.0	405	1.4	194.3	**BF30Z-../DHE07LA4**	45	7400	-
0.3	6.1	465	1.25	224.8	**BF30Z-../DHE07LA4**	45	7400	-
0.3	5.5	520	1.1	247.3	**BF30Z-../DHE07LA4**	45	7400	-
0.3	5.2	550	1.05	263.5	**BF30Z-../DHE07LA4**	45	7400	-
0.3	4.7	600	0.96	289.8	**BF30Z-../DHE07LA4**	45	7400	-
0.3	4.4	650	0.88	310.7	**BF30Z-../DHE07LA4**	45	7400	-
0.3	4.0	710	0.81	341.8	**BF30Z-../DHE07LA4**	45	7400	-
0.3	9.7	295	3.1	141.4	**BF40Z-../DHE07LA4**	55	10600	-
0.3	8.8	325	2.8	155.6	**BF40Z-../DHE07LA4**	55	10600	-
0.3	8.0	355	2.5	171.2	**BF40Z-../DHE07LA4**	55	10600	-
0.3	7.3	390	2.3	188.3	**BF40Z-../DHE07LA4**	55	10600	-
0.3	6.8	420	2.1	202.2	**BF40Z-../DHE07LA4**	55	10600	-
0.3	6.2	460	1.95	222.4	**BF40Z-../DHE07LA4**	55	10600	-
0.3	5.4	530	1.7	253.2	**BF40Z-../DHE07LA4**	55	10600	-
0.3	4.9	580	1.55	278.5	**BF40Z-../DHE07LA4**	55	10600	-
0.3	4.7	600	1.5	295.1	**BF40Z-../DHE07LA4**	55	10600	-
0.3	4.2	680	1.3	324.7	**BF40Z-../DHE07LA4**	55	10600	-
0.3	4.0	710	1.25	346.8	**BF40Z-../DHE07LA4**	55	10600	-
0.3	3.6	790	1.15	381.5	**BF40Z-../DHE07LA4**	55	10600	-
0.3	3.3	860	1.05	417.3	**BF40Z-../DHE07LA4**	55	10600	-
0.3	3.0	950	0.95	459.1	**BF40Z-../DHE07LA4**	55	10600	-
0.3	2.7	1060	0.85	514.6	**BF40Z-../DHE07LA4**	55	10600	-
0.3	2.3	1050	0.95	597.3	**BF40G10-../DHE07LA4**	61	10600	-
0.3	6.7	425	3.1	205.2	**BF50Z-../DHE07LA4**	85	13600	-
0.3	5.5	520	2.5	247.5	**BF50Z-../DHE07LA4**	85	13600	-
0.3	5.0	570	2.3	276.8	**BF50Z-../DHE07LA4**	85	13600	-
0.3	4.3	660	1.95	316.6	**BF50Z-../DHE07LA4**	85	13600	-
0.3	3.9	730	1.8	354.0	**BF50Z-../DHE07LA4**	85	13600	-
0.3	3.5	810	1.6	392.8	**BF50Z-../DHE07LA4**	85	13600	-
0.3	3.1	920	1.4	439.3	**BF50Z-../DHE07LA4**	85	13600	-
0.3	2.8	1020	1.25	496.4	**BF50Z-../DHE07LA4**	85	13600	-
0.3	2.5	1140	1.15	555.2	**BF50Z-../DHE07LA4**	85	13600	-
0.3	2.0	1240	1.15	680.9	**BF50G10-../DHE07LA4**	89	13600	-
0.3	1.6	1580	0.89	864.5	**BF50G10-../DHE07LA4**	89	13600	-
0.3	2.4	950	2.6	569.3	**BF60G20-../DHE07LA4**	136	15300	43300
0.3	2.0	1140	2.2	689.0	**BF60G20-../DHE07LA4**	136	15300	43300
0.3	1.7	1370	1.8	813.2	**BF60G20-../DHE07LA4**	136	15300	43300
0.3	1.5	1630	1.55	937.6	**BF60G20-../DHE07LA4**	136	15300	43300
0.3	1.2	2050	1.2	1211	**BF60G20-../DHE07LA4**	136	15300	43300

The torques marked (*) are maximum permissible torques for service factor f_B=1,0.

0.3 kW

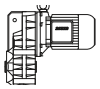

P_N	50 Hz			i	Type	m		
	n_2	M_2	f_B					
[kW]	[1/min]	[Nm]	[—]	[:1]		[kg]	[N]	[N]
0.3	1.4	1740	3.3	1017	**BF70G20-../DHE07LA4**	215	16100	47700
0.3	1.0	2500	2.3	1390	**BF70G20-../DHE07LA4**	215	16100	47700
0.3	0.85	2950	1.95	1621	**BF70G20-../DHE07LA4**	215	16100	47700
0.3	0.75	3350	1.7	1912	**BF70G20-../DHE07LA4**	215	16100	47700
0.3	0.6	4250	1.35	2448	**BF70G20-../DHE07LA4**	215	16100	47700
0.3	0.48	5400	1.05	2849	**BF70G20-../DHE07LA4**	215	16100	47700

0.37 kW

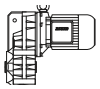

P_N	50 Hz			i	Type	m		
	n_2	M_2	f_B					
[kW]	[1/min]	[Nm]	[—]	[:1]		[kg]	[N]	[N]
0.37	250	14.1	4.4	5.72	**BF06-../DHE08MA4**	16	1600	-
0.37	187	18.8	3.6	7.66	**BF06-../DHE08MA4**	16	1800	-
0.37	156	22.5	3.1	9.21	**BF06-../DHE08MA4**	16	1900	-
0.37	119	29.5	2.5	12.07	**BF06-../DHE08MA4**	16	2000	-
0.37	101	34.5	2.5	14.21	**BF06-../DHE08MA4**	16	2100	-
0.37	85	41.5	2.3	16.99	**BF06-../DHE08MA4**	16	2500	-
0.37	71	49.5	1.9	20.42	**BF06-../DHE08MA4**	16	2700	-
0.37	54	65	1.45	26.76	**BF06-../DHE08MA4**	16	3000	-
0.37	45.5	77	1.25	31.50	**BF06-../DHE08MA4**	16	3200	-
0.37	38	92	1.05	37.69	**BF06-../DHE08MA4**	16	3500	-
0.37	31	113	0.84	46.14	**BF06-../DHE08MA4**	16	3800	-
0.37	46	76	3.2	31.31	**BF10-../DHE08MA4**	27	3600	-
0.37	40	88	2.7	36.15	**BF10-../DHE08MA4**	27	3800	-
0.37	36	98	2.4	39.75	**BF10-../DHE08MA4**	27	3950	-
0.37	33.5	105	2.3	43.06	**BF10-../DHE08MA4**	27	4100	-
0.37	30.5	115	2.1	47.35	**BF10-../DHE08MA4**	27	4250	-
0.37	28	126	1.9	51.28	**BF10-../DHE08MA4**	27	4400	-
0.37	25.5	138	1.75	56.39	**BF10-../DHE08MA4**	27	4550	-
0.37	23.5	150	1.6	61.55	**BF10-../DHE08MA4**	27	4700	-
0.37	21.5	164	1.45	67.69	**BF10-../DHE08MA4**	27	4900	-
0.37	18.5	191	1.25	77.55	**BF10-../DHE08MA4**	27	5100	-
0.37	17	205	1.15	85.27	**BF10-../DHE08MA4**	27	5300	-
0.37	16	220	1.1	90.91	**BF10-../DHE08MA4**	27	5400	-
0.37	14.5	240	1.0	99.97	**BF10-../DHE08MA4**	27	5600	-
0.37	13	270	0.89	112.3	**BF10-../DHE08MA4**	27	5900	-
0.37	12	290	0.83	123.5	**BF10-../DHE08MA4**	27	6100	-
0.37	27	130	3.2	53.43	**BF20-../DHE08MA4**	33	5500	-
0.37	25	141	3.0	58.24	**BF20-../DHE08MA4**	33	5600	-
0.37	22.5	157	2.7	64.08	**BF20-../DHE08MA4**	33	5900	-
0.37	21	168	2.5	69.70	**BF20-../DHE08MA4**	33	6100	-
0.37	19	185	2.3	76.69	**BF20-../DHE08MA4**	33	6300	-
0.37	16.5	210	2.0	87.31	**BF20-../DHE08MA4**	33	6600	-
0.37	14.5	240	1.75	100.2	**BF20-../DHE08MA4**	33	7000	-
0.37	13	270	1.55	110.2	**BF20-../DHE08MA4**	33	7300	-
0.37	12	290	1.45	123.5	**BF20-../DHE08MA4**	33	7600	-
0.37	11	320	1.3	135.9	**BF20-../DHE08MA4**	33	7900	-
0.37	10.5	335	1.25	141.2	**BF20Z-../DHE08MA4**	35	7900	-
0.37	9.3	375	1.1	155.4	**BF20Z-../DHE08MA4**	35	7900	-
0.37	8.8	400	1.05	164.3	**BF20Z-../DHE08MA4**	35	7900	-
0.37	8.0	440	0.95	180.8	**BF20Z-../DHE08MA4**	35	7900	-
0.37	7.3	480	0.88	197.1	**BF20Z-../DHE08MA4**	35	7900	-
0.37	20	176	3.3	72.13	**BF30-../DHE08MA4**	43	5700	-
0.37	18.5	191	3.0	79.34	**BF30-../DHE08MA4**	43	5900	-
0.37	16.5	210	2.7	87.08	**BF30-../DHE08MA4**	43	6200	-
0.37	15	235	2.4	95.79	**BF30-../DHE08MA4**	43	6400	-
0.37	13.5	260	2.2	107.6	**BF30-../DHE08MA4**	43	6700	-
0.37	12.5	280	2.1	118.3	**BF30-../DHE08MA4**	43	7000	-
0.37	11.5	305	1.9	124.7	**BF30-../DHE08MA4**	43	7100	-
0.37	10.5	335	1.7	137.1	**BF30-../DHE08MA4**	43	7400	-
0.37	9.5	370	1.55	150.7	**BF30Z-../DHE08MA4**	46	7400	-
0.37	8.7	405	1.4	165.8	**BF30Z-../DHE08MA4**	46	7400	-

The torques marked (*) are maximum permissible torques for service factor f_B=1,0.

0.37 kW

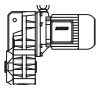

P_N	50 Hz			i	Type	m		
	n_2	M_2	f_B					
[kW]	[1/min]	[Nm]	[—]	[:1]		[kg]	[N]	[N]
0.37	8.1	435	1.3	176.6	**BF30Z-../DHE08MA4**	46	7400	-
0.37	7.4	475	1.2	194.3	**BF30Z-../DHE08MA4**	46	7400	-
0.37	6.4	550	1.05	224.8	**BF30Z-../DHE08MA4**	46	7400	-
0.37	5.8	600	0.96	247.3	**BF30Z-../DHE08MA4**	46	7400	-
0.37	5.5	640	0.9	263.5	**BF30Z-../DHE08MA4**	46	7400	-
0.37	5.0	700	0.82	289.8	**BF30Z-../DHE08MA4**	46	7400	-
0.37	13	270	3.3	111.1	**BF40-../DHE08MA4**	53	9800	-
0.37	11.5	305	3.0	124.5	**BF40-../DHE08MA4**	53	10200	-
0.37	10.5	335	2.7	137.0	**BF40-../DHE08MA4**	53	10600	-
0.37	9.2	380	2.4	155.6	**BF40Z-../DHE08MA4**	56	10600	-
0.37	8.4	420	2.1	171.2	**BF40Z-../DHE08MA4**	56	10600	-
0.37	7.6	460	1.95	188.3	**BF40Z-../DHE08MA4**	56	10600	-
0.37	7.1	495	1.8	202.2	**BF40Z-../DHE08MA4**	56	10600	-
0.37	6.5	540	1.65	222.4	**BF40Z-../DHE08MA4**	56	10600	-
0.37	5.7	610	1.5	253.2	**BF40Z-../DHE08MA4**	56	10600	-
0.37	5.2	670	1.35	278.5	**BF40Z-../DHE08MA4**	56	10600	-
0.37	4.9	720	1.25	295.1	**BF40Z-../DHE08MA4**	56	10600	-
0.37	4.5	780	1.15	324.7	**BF40Z-../DHE08MA4**	56	10600	-
0.37	4.2	840	1.05	346.8	**BF40Z-../DHE08MA4**	56	10600	-
0.37	3.8	920	0.98	381.5	**BF40Z-../DHE08MA4**	56	10600	-
0.37	3.5	1000	0.9	417.3	**BF40Z-../DHE08MA4**	56	10600	-
0.37	3.2	1100	0.82	459.1	**BF40Z-../DHE08MA4**	56	10600	-
0.37	7.8	450	2.9	183.5	**BF50Z-../DHE08MA4**	86	13600	-
0.37	7.0	500	2.6	205.2	**BF50Z-../DHE08MA4**	86	13600	-
0.37	5.8	600	2.2	247.5	**BF50Z-../DHE08MA4**	86	13600	-
0.37	5.2	670	1.95	276.8	**BF50Z-../DHE08MA4**	86	13600	-
0.37	4.6	760	1.7	316.6	**BF50Z-../DHE08MA4**	86	13600	-
0.37	4.1	860	1.5	354.0	**BF50Z-../DHE08MA4**	86	13600	-
0.37	3.7	950	1.35	392.8	**BF50Z-../DHE08MA4**	86	13600	-
0.37	3.3	1070	1.2	439.3	**BF50Z-../DHE08MA4**	86	13600	-
0.37	2.9	1210	1.05	496.4	**BF50Z-../DHE08MA4**	86	13600	-
0.37	2.6	1350	0.96	555.2	**BF50Z-../DHE08MA4**	86	13600	-
0.37	2.2	1410	0.99	680.9	**BF50G10-../DHE08MA4**	90	13600	-
0.37	4.9	720	3.2	293.4	**BF60Z-../DHE08MA4**	130	15300	43300
0.37	4.4	800	2.9	325.6	**BF60Z-../DHE08MA4**	130	15300	43300
0.37	3.8	920	2.5	380.0	**BF60Z-../DHE08MA4**	130	15300	43300
0.37	3.4	1030	2.2	421.6	**BF60Z-../DHE08MA4**	130	15300	43300
0.37	3.2	1100	2.1	459.9	**BF60Z-../DHE08MA4**	130	15300	43300
0.37	2.9	1210	1.9	510.3	**BF60Z-../DHE08MA4**	130	15300	43300
0.37	2.6	1120	2.2	569.3	**BF60G20-../DHE08MA4**	137	15300	43300
0.37	2.1	1390	1.8	689.0	**BF60G20-../DHE08MA4**	137	15300	43300
0.37	1.8	1650	1.5	813.2	**BF60G20-../DHE08MA4**	137	15300	43300
0.37	1.6	1930	1.3	937.6	**BF60G20-../DHE08MA4**	137	15300	43300
0.37	1.2	2600	0.96	1211	**BF60G20-../DHE08MA4**	137	15300	43300
0.37	1.7	1820	3.1	872.1	**BF70G20-../DHE08MA4**	216	16100	47700
0.37	1.5	2050	2.8	1017	**BF70G20-../DHE08MA4**	216	16100	47700
0.37	1.1	2850	2.0	1390	**BF70G20-../DHE08MA4**	216	16100	47700
0.37	0.9	3500	1.65	1621	**BF70G20-../DHE08MA4**	216	16100	47700
0.37	0.75	4250	1.35	1912	**BF70G20-../DHE08MA4**	216	16100	47700
0.37	0.6	5400	1.05	2448	**BF70G20-../DHE08MA4**	216	16100	47700
0.37	0.7	3450	3.0	2051	**BF80G40-../DHE08MA4**	340	39600	75000
0.37	0.6	4300	2.4	2422	**BF80G40-../DHE08MA4**	340	39600	75000
0.37	0.55	4400	2.4	2785	**BF80G40-../DHE08MA4**	340	39600	75000
0.37	0.47	5400	1.95	3092	**BF80G40-../DHE08MA4**	340	39600	75000
0.37	0.42	6200	1.7	3461	**BF80G40-../DHE08MA4**	340	39600	75000
0.37	0.38	7000	1.5	3843	**BF80G40-../DHE08MA4**	340	39600	75000
0.37	0.33	8400	1.25	4411	**BF80G40-../DHE08MA4**	340	39600	75000
0.37	0.3	9400	1.1	4895	**BF80G40-../DHE08MA4**	340	39600	75000
0.37	0.4	6300	2.9	3644	**BF90G50-../DHE08MA4**	610	42800	120000
0.37	0.33	8200	2.3	4366	**BF90G50-../DHE08MA4**	610	42800	120000
0.37	0.3	9200	2.0	4839	**BF90G50-../DHE08MA4**	610	42800	120000
0.37	0.25	11600	1.6	5888	**BF90G50-../DHE08MA4**	610	42800	120000
0.37	0.22	13500	1.35	6529	**BF90G50-../DHE08MA4**	610	42800	120000
0.37	0.19	16000	1.15	7533	**BF90G50-../DHE08MA4**	610	42800	120000

The torques marked (*) are maximum permissible torques for service factor f_B=1,0.

0.37 kW

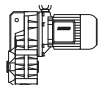

P_N	50 Hz			i	**Type**	m		
	n_2	M_2	f_B					
[kW]	[1/min]	[Nm]	[—]	[:1]		[kg]	[N]	[N]
0.37	0.18	17100	1.1	8350	**BF90G50-../DHE08MA4**	610	42800	120000

0.55 kW

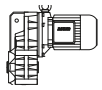

P_N	50 Hz			i	**Type**	m		
	n_2	M_2	f_B					
[kW]	[1/min]	[Nm]	[—]	[:1]		[kg]	[N]	[N]
0.55	250	21	3.0	5.72	**BF06-../DHE08LA4**	17	1600	-
0.55	185	28	2.4	7.66	**BF06-../DHE08LA4**	17	1800	-
0.55	154	34	2.1	9.21	**BF06-../DHE08LA4**	17	1900	-
0.55	118	44.5	1.7	12.07	**BF06-../DHE08LA4**	17	2000	-
0.55	100	52	1.65	14.21	**BF06-../DHE08LA4**	17	2100	-
0.55	84	62	1.55	16.99	**BF06-../DHE08LA4**	17	2500	-
0.55	70	75	1.25	20.42	**BF06-../DHE08LA4**	17	2700	-
0.55	53	99	0.96	26.76	**BF06-../DHE08LA4**	17	3000	-
0.55	45	116	0.82	31.50	**BF06-../DHE08LA4**	17	3200	-
0.55	95	55	3.3	15.04	**BF10-../DHE08LA4**	28	2800	-
0.55	71	73	3.3	20.05	**BF10-../DHE08LA4**	28	3000	-
0.55	61	86	2.8	23.28	**BF10-../DHE08LA4**	28	3200	-
0.55	56	93	2.6	25.60	**BF10-../DHE08LA4**	28	3350	-
0.55	50	105	2.3	28.47	**BF10-../DHE08LA4**	28	3450	-
0.55	45.5	115	2.1	31.31	**BF10-../DHE08LA4**	28	3600	-
0.55	39.5	132	1.8	36.15	**BF10-../DHE08LA4**	28	3800	-
0.55	36	145	1.65	39.75	**BF10-../DHE08LA4**	28	3950	-
0.55	33	159	1.5	43.06	**BF10-../DHE08LA4**	28	4100	-
0.55	30	175	1.35	47.35	**BF10-../DHE08LA4**	28	4250	-
0.55	28	187	1.3	51.28	**BF10-../DHE08LA4**	28	4400	-
0.55	25.5	205	1.15	56.39	**BF10-../DHE08LA4**	28	4550	-
0.55	23	225	1.05	61.55	**BF10-../DHE08LA4**	28	4700	-
0.55	21	250	0.96	67.69	**BF10-../DHE08LA4**	28	4900	-
0.55	18.5	280	0.86	77.55	**BF10-../DHE08LA4**	28	5100	-
0.55	39.5	132	3.2	35.85	**BF20-../DHE08LA4**	35	4650	-
0.55	34	154	2.7	41.72	**BF20-../DHE08LA4**	35	4950	-
0.55	31	169	2.5	45.90	**BF20-../DHE08LA4**	35	5100	-
0.55	29.5	178	2.4	48.56	**BF20-../DHE08LA4**	35	5200	-
0.55	26.5	198	2.1	53.43	**BF20-../DHE08LA4**	35	5500	-
0.55	24.5	210	2.0	58.24	**BF20-../DHE08LA4**	35	5600	-
0.55	22.5	230	1.85	64.08	**BF20-../DHE08LA4**	35	5900	-
0.55	20.5	255	1.65	69.70	**BF20-../DHE08LA4**	35	6100	-
0.55	18.5	280	1.5	76.69	**BF20-../DHE08LA4**	35	6300	-
0.55	16.5	315	1.35	87.31	**BF20-../DHE08LA4**	35	6600	-
0.55	14.5	360	1.15	100.2	**BF20-../DHE08LA4**	35	7000	-
0.55	13	400	1.05	110.2	**BF20-../DHE08LA4**	35	7300	-
0.55	11.5	455	0.92	123.5	**BF20-../DHE08LA4**	35	7600	-
0.55	10.5	500	0.84	135.9	**BF20-../DHE08LA4**	35	7900	-
0.55	27.5	191	3.0	52.20	**BF30-../DHE08LA4**	45	5000	-
0.55	25	210	2.7	57.41	**BF30-../DHE08LA4**	45	5200	-
0.55	23.5	220	2.6	61.17	**BF30-../DHE08LA4**	45	5300	-
0.55	21.5	240	2.4	67.28	**BF30-../DHE08LA4**	45	5500	-
0.55	20	260	2.2	72.13	**BF30-../DHE08LA4**	45	5700	-
0.55	18	290	2.0	79.34	**BF30-../DHE08LA4**	45	5900	-
0.55	16.5	315	1.85	87.08	**BF30-../DHE08LA4**	45	6200	-
0.55	15	350	1.65	95.79	**BF30-../DHE08LA4**	45	6400	-
0.55	13.5	385	1.5	107.6	**BF30-../DHE08LA4**	45	6700	-
0.55	12	435	1.3	118.3	**BF30-../DHE08LA4**	45	7000	-
0.55	11.5	455	1.25	124.7	**BF30-../DHE08LA4**	45	7100	-
0.55	10.5	500	1.15	137.1	**BF30-../DHE08LA4**	45	7400	-
0.55	9.4	550	1.05	150.7	**BF30Z-../DHE08LA4**	48	7400	-
0.55	8.6	610	0.94	165.8	**BF30Z-../DHE08LA4**	48	7400	-
0.55	8.1	640	0.9	176.6	**BF30Z-../DHE08LA4**	48	7400	-
0.55	7.3	710	0.81	194.3	**BF30Z-../DHE08LA4**	48	7400	-
0.55	18.5	280	3.2	78.55	**BF40-../DHE08LA4**	54	8500	-

The torques marked (*) are maximum permissible torques for service factor f_B=1,0.

0.55 kW

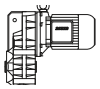

P_N	50 Hz			i	Type	m		
	n_2	M_2	f_B					
[kW]	[1/min]	[Nm]	[—]	[:1]		[kg]	[N]	[N]
0.55	17	305	3.0	83.91	**BF40-../DHE08LA4**	54	8700	-
0.55	15.5	335	2.7	92.31	**BF40-../DHE08LA4**	54	9100	-
0.55	14.5	360	2.5	101.0	**BF40-../DHE08LA4**	54	9400	-
0.55	13	400	2.3	111.1	**BF40-../DHE08LA4**	54	9800	-
0.55	11.5	455	2.0	124.5	**BF40-../DHE08LA4**	54	10200	-
0.55	10.5	500	1.8	137.0	**BF40-../DHE08LA4**	54	10600	-
0.55	9.1	570	1.6	155.6	**BF40Z-../DHE08LA4**	58	10600	-
0.55	8.3	630	1.45	171.2	**BF40Z-../DHE08LA4**	58	10600	-
0.55	7.6	690	1.3	188.3	**BF40Z-../DHE08LA4**	58	10600	-
0.55	7.0	750	1.2	202.2	**BF40Z-../DHE08LA4**	58	10600	-
0.55	6.4	820	1.1	222.4	**BF40Z-../DHE08LA4**	58	10600	-
0.55	5.6	930	0.97	253.2	**BF40Z-../DHE08LA4**	58	10600	-
0.55	5.1	1020	0.88	278.5	**BF40Z-../DHE08LA4**	58	10600	-
0.55	4.8	1090	0.83	295.1	**BF40Z-../DHE08LA4**	58	10600	-
0.55	12.5	420	3.1	114.0	**BF50-../DHE08LA4**	83	12900	-
0.55	11.5	455	2.9	127.5	**BF50-../DHE08LA4**	83	13600	-
0.55	10.5	500	2.6	138.1	**BF50Z-../DHE08LA4**	88	13600	-
0.55	9.2	570	2.3	154.5	**BF50Z-../DHE08LA4**	88	13600	-
0.55	7.8	670	1.95	183.5	**BF50Z-../DHE08LA4**	88	13600	-
0.55	6.9	760	1.7	205.2	**BF50Z-../DHE08LA4**	88	13600	-
0.55	5.8	900	1.45	247.5	**BF50Z-../DHE08LA4**	88	13600	-
0.55	5.2	1010	1.3	276.8	**BF50Z-../DHE08LA4**	88	13600	-
0.55	4.5	1160	1.1	316.6	**BF50Z-../DHE08LA4**	88	13600	-
0.55	4.0	1310	0.99	354.0	**BF50Z-../DHE08LA4**	88	13600	-
0.55	3.7	1410	0.92	392.8	**BF50Z-../DHE08LA4**	88	13600	-
0.55	3.3	1590	0.82	439.3	**BF50Z-../DHE08LA4**	88	13600	-
0.55	7.6	690	3.3	187.7	**BF60Z-../DHE08LA4**	131	15300	43300
0.55	6.4	820	2.8	221.4	**BF60Z-../DHE08LA4**	131	15300	43300
0.55	5.8	900	2.6	245.6	**BF60Z-../DHE08LA4**	131	15300	43300
0.55	4.9	1070	2.1	293.4	**BF60Z-../DHE08LA4**	131	15300	43300
0.55	4.4	1190	1.95	325.6	**BF60Z-../DHE08LA4**	131	15300	43300
0.55	3.8	1380	1.65	380.0	**BF60Z-../DHE08LA4**	131	15300	43300
0.55	3.4	1540	1.5	421.6	**BF60Z-../DHE08LA4**	131	15300	43300
0.55	3.1	1690	1.35	459.9	**BF60Z-../DHE08LA4**	131	15300	43300
0.55	2.8	1870	1.25	510.3	**BF60Z-../DHE08LA4**	131	15300	43300
0.55	2.5	1860	1.35	569.3	**BF60G20-../DHE08LA4**	139	15300	43300
0.55	2.1	2200	1.15	689.0	**BF60G20-../DHE08LA4**	139	15300	43300
0.55	1.8	2600	0.96	813.2	**BF60G20-../DHE08LA4**	139	15300	43300
0.55	1.6	3000	0.83	937.6	**BF60G20-../DHE08LA4**	139	15300	43300
0.55	3.3	1590	3.3	439.2	**BF70Z-../DHE08LA4**	220	16100	47700
0.55	2.8	1870	2.8	512.4	**BF70Z-../DHE08LA4**	220	16100	47700
0.55	2.7	1720	3.3	524.1	**BF70G20-../DHE08LA4**	217	16100	47700
0.55	2.5	1850	3.1	577.5	**BF70G20-../DHE08LA4**	217	16100	47700
0.55	2.2	2100	2.7	673.6	**BF70G20-../DHE08LA4**	217	16100	47700
0.55	1.7	2800	2.0	872.1	**BF70G20-../DHE08LA4**	217	16100	47700
0.55	1.4	3450	1.65	1017	**BF70G20-../DHE08LA4**	217	16100	47700
0.55	1.1	4400	1.3	1390	**BF70G20-../DHE08LA4**	217	16100	47700
0.55	0.9	5400	1.05	1621	**BF70G20-../DHE08LA4**	217	16100	47700
0.55	1.5	3500	3.0	990.4	**BF80Z-../DHE08LA4**	336	39600	75000
0.55	1.3	4000	2.6	1124	**BF80Z-../DHE08LA4**	336	39600	75000
0.55	1.1	3300	3.2	1329	**BF80G40-../DHE08LA4**	341	39600	75000
0.55	0.95	4100	2.6	1491	**BF80G40-../DHE08LA4**	341	39600	75000
0.55	0.85	4550	2.3	1693	**BF80G40-../DHE08LA4**	341	39600	75000
0.55	0.7	5900	1.8	2051	**BF80G40-../DHE08LA4**	341	39600	75000
0.55	0.6	7100	1.5	2422	**BF80G40-../DHE08LA4**	341	39600	75000
0.55	0.55	7500	1.4	2785	**BF80G40-../DHE08LA4**	341	39600	75000
0.55	0.46	9300	1.15	3092	**BF80G40-../DHE08LA4**	341	39600	75000
0.55	0.55	7100	2.6	2656	**BF90G50-../DHE08LA4**	612	42800	120000
0.55	0.48	8600	2.2	2952	**BF90G50-../DHE08LA4**	612	42800	120000
0.55	0.44	9400	1.95	3286	**BF90G50-../DHE08LA4**	612	42800	120000
0.55	0.39	10900	1.7	3644	**BF90G50-../DHE08LA4**	612	42800	120000
0.55	0.33	13400	1.4	4366	**BF90G50-../DHE08LA4**	612	42800	120000
0.55	0.3	15000	1.25	4839	**BF90G50-../DHE08LA4**	612	42800	120000

The torques marked (*) are maximum permissible torques for service factor f_B=1,0.

0.75 kW

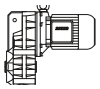

P_N	50 Hz			i	Type	m		
	n_2	M_2	f_B					
[kW]	[1/min]	[Nm]	[—]	[:1]		[kg]	[N]	[N]
0.75	250	28.5	2.2	5.72	**BF06-../DHE08XA4**	18	1600	-
0.75	186	38.5	1.75	7.66	**BF06-../DHE08XA4**	18	1800	-
0.75	155	46	1.5	9.21	**BF06-../DHE08XA4**	18	1900	-
0.75	118	60	1.25	12.07	**BF06-../DHE08XA4**	18	2000	-
0.75	100	71	1.2	14.21	**BF06-../DHE08XA4**	18	2100	-
0.75	84	85	1.1	16.99	**BF06-../DHE08XA4**	18	2500	-
0.75	70	102	0.93	20.42	**BF06-../DHE08XA4**	18	2700	-
0.75	120	59	3.1	11.84	**BF10-../DHE08XA4**	30	2500	-
0.75	95	75	2.4	15.04	**BF10-../DHE08XA4**	30	2800	-
0.75	78	91	2.6	18.23	**BF10-../DHE08XA4**	30	2900	-
0.75	71	100	2.4	20.05	**BF10-../DHE08XA4**	30	3000	-
0.75	61	117	2.1	23.28	**BF10-../DHE08XA4**	30	3200	-
0.75	56	127	1.9	25.60	**BF10-../DHE08XA4**	30	3350	-
0.75	50	143	1.7	28.47	**BF10-../DHE08XA4**	30	3450	-
0.75	45.5	157	1.55	31.31	**BF10-../DHE08XA4**	30	3600	-
0.75	39.5	181	1.35	36.15	**BF10-../DHE08XA4**	30	3800	-
0.75	36	198	1.2	39.75	**BF10-../DHE08XA4**	30	3950	-
0.75	33	215	1.1	43.06	**BF10-../DHE08XA4**	30	4100	-
0.75	30	235	1.0	47.35	**BF10-../DHE08XA4**	30	4250	-
0.75	28	255	0.94	51.28	**BF10-../DHE08XA4**	30	4400	-
0.75	25.5	280	0.86	56.39	**BF10-../DHE08XA4**	30	4550	-
0.75	23.5	300	0.8	61.55	**BF10-../DHE08XA4**	30	4700	-
0.75	59	121	3.3	24.25	**BF20-../DHE08XA4**	36	3950	-
0.75	52	137	3.1	27.62	**BF20-../DHE08XA4**	36	4150	-
0.75	47	152	2.8	30.40	**BF20-../DHE08XA4**	36	4400	-
0.75	44	162	2.6	32.58	**BF20-../DHE08XA4**	36	4450	-
0.75	40	179	2.3	35.85	**BF20-../DHE08XA4**	36	4650	-
0.75	34.5	205	2.0	41.72	**BF20-../DHE08XA4**	36	4950	-
0.75	31	230	1.85	45.90	**BF20-../DHE08XA4**	36	5100	-
0.75	29.5	240	1.75	48.56	**BF20-../DHE08XA4**	36	5200	-
0.75	27	265	1.6	53.43	**BF20-../DHE08XA4**	36	5500	-
0.75	24.5	290	1.45	58.24	**BF20-../DHE08XA4**	36	5600	-
0.75	22.5	315	1.35	64.08	**BF20-../DHE08XA4**	36	5900	-
0.75	20.5	345	1.2	69.70	**BF20-../DHE08XA4**	36	6100	-
0.75	19	375	1.1	76.69	**BF20-../DHE08XA4**	36	6300	-
0.75	16.5	430	0.98	87.31	**BF20-../DHE08XA4**	36	6600	-
0.75	14.5	490	0.86	100.2	**BF20-../DHE08XA4**	36	7000	-
0.75	41	174	3.3	35.00	**BF30-../DHE08XA4**	46	4200	-
0.75	37	193	3.0	38.49	**BF30-../DHE08XA4**	46	4400	-
0.75	35	200	2.9	41.01	**BF30-../DHE08XA4**	46	4500	-
0.75	31.5	225	2.6	45.10	**BF30-../DHE08XA4**	46	4700	-
0.75	27.5	260	2.2	52.20	**BF30-../DHE08XA4**	46	5000	-
0.75	25	285	2.0	57.41	**BF30-../DHE08XA4**	46	5200	-
0.75	23.5	300	1.9	61.17	**BF30-../DHE08XA4**	46	5300	-
0.75	21.5	330	1.75	67.28	**BF30-../DHE08XA4**	46	5500	-
0.75	20	355	1.6	72.13	**BF30-../DHE08XA4**	46	5700	-
0.75	18	395	1.45	79.34	**BF30-../DHE08XA4**	46	5900	-
0.75	16.5	430	1.35	87.08	**BF30-../DHE08XA4**	46	6200	-
0.75	15	475	1.2	95.79	**BF30-../DHE08XA4**	46	6400	-
0.75	13.5	530	1.1	107.6	**BF30-../DHE08XA4**	46	6700	-
0.75	12.5	570	1.0	118.3	**BF30-../DHE08XA4**	46	7000	-
0.75	11.5	620	0.93	124.7	**BF30-../DHE08XA4**	46	7100	-
0.75	10.5	680	0.85	137.1	**BF30-../DHE08XA4**	46	7400	-
0.75	26.5	270	3.3	53.82	**BF40-../DHE08XA4**	55	7200	-
0.75	23.5	300	3.0	61.25	**BF40-../DHE08XA4**	55	7600	-
0.75	21.5	330	2.7	67.38	**BF40-../DHE08XA4**	55	8000	-
0.75	20	355	2.5	71.40	**BF40-../DHE08XA4**	55	8100	-
0.75	18.5	385	2.3	78.55	**BF40-../DHE08XA4**	55	8500	-
0.75	17	420	2.1	83.91	**BF40-../DHE08XA4**	55	8700	-
0.75	15.5	460	1.95	92.31	**BF40-../DHE08XA4**	55	9100	-
0.75	14.5	490	1.85	101.0	**BF40-../DHE08XA4**	55	9400	-
0.75	13	550	1.65	111.1	**BF40-../DHE08XA4**	55	9800	-
0.75	11.5	620	1.45	124.5	**BF40-../DHE08XA4**	55	10200	-
0.75	10.5	680	1.3	137.0	**BF40-../DHE08XA4**	55	10600	-
0.75	9.2	770	1.15	155.6	**BF40Z-../DHE08XA4**	59	10600	-
0.75	8.3	860	1.05	171.2	**BF40Z-../DHE08XA4**	59	10600	-

The torques marked (*) are maximum permissible torques for service factor f_B=1,0.

0.75 kW

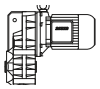

P_N	50 Hz			i	Type	m		
	n_2	M_2	f_B					
[kW]	[1/min]	[Nm]	[—]	[:1]		[kg]	[N]	[N]
0.75	7.6	940	0.96	188.3	**BF40Z-../DHE08XA4**	59	10600	-
0.75	7.1	1000	0.9	202.2	**BF40Z-../DHE08XA4**	59	10600	-
0.75	6.4	1110	0.81	222.4	**BF40Z-../DHE08XA4**	59	10600	-
0.75	17.5	405	3.2	81.33	**BF50-../DHE08XA4**	84	11300	-
0.75	16	445	2.9	90.24	**BF50-../DHE08XA4**	84	11800	-
0.75	14.5	490	2.7	100.9	**BF50-../DHE08XA4**	84	12300	-
0.75	12.5	570	2.3	114.0	**BF50-../DHE08XA4**	84	12900	-
0.75	11.5	620	2.1	127.5	**BF50-../DHE08XA4**	84	13600	-
0.75	10.5	680	1.9	138.1	**BF50Z-../DHE08XA4**	88	13600	-
0.75	9.2	770	1.7	154.5	**BF50Z-../DHE08XA4**	88	13600	-
0.75	7.8	910	1.45	183.5	**BF50Z-../DHE08XA4**	88	13600	-
0.75	7.0	1020	1.25	205.2	**BF50Z-../DHE08XA4**	88	13600	-
0.75	5.8	1230	1.05	247.5	**BF50Z-../DHE08XA4**	88	13600	-
0.75	5.2	1370	0.95	276.8	**BF50Z-../DHE08XA4**	88	13600	-
0.75	4.5	1590	0.82	316.6	**BF50Z-../DHE08XA4**	88	13600	-
0.75	8.4	850	2.7	169.2	**BF60Z-../DHE08XA4**	132	15300	43300
0.75	7.6	940	2.4	187.7	**BF60Z-../DHE08XA4**	132	15300	43300
0.75	6.5	1100	2.1	221.4	**BF60Z-../DHE08XA4**	132	15300	43300
0.75	5.8	1230	1.85	245.6	**BF60Z-../DHE08XA4**	132	15300	43300
0.75	4.9	1460	1.6	293.4	**BF60Z-../DHE08XA4**	132	15300	43300
0.75	4.4	1620	1.4	325.6	**BF60Z-../DHE08XA4**	132	15300	43300
0.75	3.8	1880	1.2	380.0	**BF60Z-../DHE08XA4**	132	15300	43300
0.75	3.4	2100	1.1	421.6	**BF60Z-../DHE08XA4**	132	15300	43300
0.75	3.1	2300	1.0	459.9	**BF60Z-../DHE08XA4**	132	15300	43300
0.75	2.8	2550	0.9	510.3	**BF60Z-../DHE08XA4**	132	15300	43300
0.75	2.5	2600	0.96	569.3	**BF60G20-../DHE08XA4**	140	15300	43300
0.75	2.1	3100	0.81	689.0	**BF60G20-../DHE08XA4**	140	15300	43300
0.75	4.2	1700	3.1	341.7	**BF70Z-../DHE08XA4**	220	16100	47700
0.75	3.6	1980	2.6	398.7	**BF70Z-../DHE08XA4**	220	16100	47700
0.75	3.3	2150	2.4	439.2	**BF70Z-../DHE08XA4**	220	16100	47700
0.75	2.8	2550	2.0	512.4	**BF70Z-../DHE08XA4**	220	16100	47700
0.75	2.5	2600	2.2	577.5	**BF70G20-../DHE08XA4**	218	16100	47700
0.75	2.2	2950	1.95	673.6	**BF70G20-../DHE08XA4**	218	16100	47700
0.75	1.7	3950	1.45	872.1	**BF70G20-../DHE08XA4**	218	16100	47700
0.75	1.4	4800	1.2	1017	**BF70G20-../DHE08XA4**	218	16100	47700
0.75	1.1	6100	0.93	1390	**BF70G20-../DHE08XA4**	218	16100	47700
0.75	2.2	3250	3.2	662.1	**BF80Z-../DHE08XA4**	337	39600	75000
0.75	1.9	3750	2.8	770.6	**BF80Z-../DHE08XA4**	337	39600	75000
0.75	1.7	4200	2.5	874.6	**BF80Z-../DHE08XA4**	337	39600	75000
0.75	1.5	4750	2.2	990.4	**BF80Z-../DHE08XA4**	337	39600	75000
0.75	1.3	5500	1.9	1124	**BF80Z-../DHE08XA4**	337	39600	75000
0.75	1.1	5000	2.1	1329	**BF80G40-../DHE08XA4**	342	39600	75000
0.75	1.0	5700	1.85	1491	**BF80G40-../DHE08XA4**	342	39600	75000
0.75	0.85	6800	1.55	1693	**BF80G40-../DHE08XA4**	342	39600	75000
0.75	0.7	8600	1.2	2051	**BF80G40-../DHE08XA4**	342	39600	75000
0.75	0.6	10300	1.0	2422	**BF80G40-../DHE08XA4**	342	39600	75000
0.75	1.0	5700	3.2	1444	**BF90G50-../DHE08XA4**	613	42800	120000
0.75	0.85	6800	2.7	1678	**BF90G50-../DHE08XA4**	613	42800	120000
0.75	0.8	7100	2.6	1867	**BF90G50-../DHE08XA4**	613	42800	120000
0.75	0.7	8100	2.3	2154	**BF90G50-../DHE08XA4**	613	42800	120000
0.75	0.55	10600	1.75	2656	**BF90G50-../DHE08XA4**	613	42800	120000
0.75	0.49	12300	1.5	2952	**BF90G50-../DHE08XA4**	613	42800	120000
0.75	0.44	13700	1.35	3286	**BF90G50-../DHE08XA4**	613	42800	120000
0.75	0.39	15800	1.15	3644	**BF90G50-../DHE08XA4**	613	42800	120000

1.1 kW

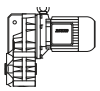

P_N	50 Hz			i	Type	m		
	n_2	M_2	f_B					
[kW]	[1/min]	[Nm]	[—]	[:1]		[kg]	[N]	[N]
1.1	260	40	3.5	5.60	**BF10-../DHE09LA4**	36	1950	-

The torques marked (*) are maximum permissible torques for service factor f_B=1,0.

1.1 kW

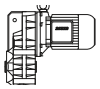

P_N	50 Hz			i	Type	m		
	n_2	M_2	f_B					
[kW]	[1/min]	[Nm]	[—]	[:1]		[kg]	[N]	[N]
1.1	190	55	2.8	7.58	**BF10-../DHE09LA4**	36	2200	-
1.1	149	70	2.5	9.69	**BF10-../DHE09LA4**	36	2350	-
1.1	122	86	2.1	11.84	**BF10-../DHE09LA4**	36	2500	-
1.1	96	109	1.7	15.04	**BF10-../DHE09LA4**	36	2800	-
1.1	79	132	1.8	18.23	**BF10-../DHE09LA4**	36	2900	-
1.1	72	145	1.65	20.05	**BF10-../DHE09LA4**	36	3000	-
1.1	62	169	1.4	23.28	**BF10-../DHE09LA4**	36	3200	-
1.1	57	184	1.3	25.60	**BF10-../DHE09LA4**	36	3350	-
1.1	51	205	1.15	28.47	**BF10-../DHE09LA4**	36	3450	-
1.1	46	225	1.05	31.31	**BF10-../DHE09LA4**	36	3600	-
1.1	40	260	0.92	36.15	**BF10-../DHE09LA4**	36	3800	-
1.1	36.5	285	0.84	39.75	**BF10-../DHE09LA4**	36	3950	-
1.1	110	95	3.0	13.18	**BF20-../DHE09LA4**	42	3300	-
1.1	93	112	2.8	15.54	**BF20-../DHE09LA4**	42	3450	-
1.1	86	122	3.0	16.77	**BF20-../DHE09LA4**	42	3500	-
1.1	79	132	2.8	18.45	**BF20-../DHE09LA4**	42	3600	-
1.1	66	159	2.5	22.04	**BF20-../DHE09LA4**	42	3800	-
1.1	60	175	2.3	24.25	**BF20-../DHE09LA4**	42	3950	-
1.1	53	198	2.1	27.62	**BF20-../DHE09LA4**	42	4150	-
1.1	47.5	220	1.9	30.40	**BF20-../DHE09LA4**	42	4400	-
1.1	44.5	235	1.8	32.58	**BF20-../DHE09LA4**	42	4450	-
1.1	40.5	255	1.65	35.85	**BF20-../DHE09LA4**	42	4650	-
1.1	35	300	1.4	41.72	**BF20-../DHE09LA4**	42	4950	-
1.1	31.5	330	1.25	45.90	**BF20-../DHE09LA4**	42	5100	-
1.1	30	350	1.2	48.56	**BF20-../DHE09LA4**	42	5200	-
1.1	27	385	1.1	53.43	**BF20-../DHE09LA4**	42	5500	-
1.1	25	420	1.0	58.24	**BF20-../DHE09LA4**	42	5600	-
1.1	22.5	465	0.9	64.08	**BF20-../DHE09LA4**	42	5900	-
1.1	21	500	0.84	69.70	**BF20-../DHE09LA4**	42	6100	-
1.1	66	159	3.3	21.85	**BF30-../DHE09LA4**	53	3500	-
1.1	60	175	3.2	24.03	**BF30-../DHE09LA4**	53	3600	-
1.1	52	200	2.9	28.23	**BF30-../DHE09LA4**	53	3800	-
1.1	46.5	225	2.6	31.05	**BF30-../DHE09LA4**	53	4000	-
1.1	41.5	250	2.3	35.00	**BF30-../DHE09LA4**	53	4200	-
1.1	37.5	280	2.1	38.49	**BF30-../DHE09LA4**	53	4400	-
1.1	35.5	295	1.95	41.01	**BF30-../DHE09LA4**	53	4500	-
1.1	32	325	1.75	45.10	**BF30-../DHE09LA4**	53	4700	-
1.1	28	375	1.55	52.20	**BF30-../DHE09LA4**	53	5000	-
1.1	25.5	410	1.4	57.41	**BF30-../DHE09LA4**	53	5200	-
1.1	24	435	1.3	61.17	**BF30-../DHE09LA4**	53	5300	-
1.1	21.5	485	1.2	67.28	**BF30-../DHE09LA4**	53	5500	-
1.1	20	520	1.1	72.13	**BF30-../DHE09LA4**	53	5700	-
1.1	18.5	560	1.05	79.34	**BF30-../DHE09LA4**	53	5900	-
1.1	17	610	0.94	87.08	**BF30-../DHE09LA4**	53	6200	-
1.1	15.5	670	0.86	95.79	**BF30-../DHE09LA4**	53	6400	-
1.1	38.5	270	3.3	37.64	**BF40-../DHE09LA4**	62	6200	-
1.1	35	300	3.0	41.42	**BF40-../DHE09LA4**	62	6500	-
1.1	32	325	2.8	45.56	**BF40-../DHE09LA4**	62	6800	-
1.1	29.5	355	2.5	48.92	**BF40-../DHE09LA4**	62	7000	-
1.1	27	385	2.3	53.82	**BF40-../DHE09LA4**	62	7200	-
1.1	24	435	2.1	61.25	**BF40-../DHE09LA4**	62	7600	-
1.1	21.5	485	1.85	67.38	**BF40-../DHE09LA4**	62	8000	-
1.1	20.5	510	1.75	71.40	**BF40-../DHE09LA4**	62	8100	-
1.1	18.5	560	1.6	78.55	**BF40-../DHE09LA4**	62	8500	-
1.1	17.5	600	1.5	83.91	**BF40-../DHE09LA4**	62	8700	-
1.1	16	650	1.4	92.31	**BF40-../DHE09LA4**	62	9100	-
1.1	14.5	720	1.25	101.0	**BF40-../DHE09LA4**	62	9400	-
1.1	13	800	1.15	111.1	**BF40-../DHE09LA4**	62	9800	-
1.1	12	870	1.05	124.5	**BF40-../DHE09LA4**	62	10200	-
1.1	11	950	0.95	137.0	**BF40-../DHE09LA4**	62	10600	-
1.1	10.5	1000	0.9	141.4	**BF40Z-../DHE09LA4**	66	10600	-
1.1	9.3	1120	0.8	155.6	**BF40Z-../DHE09LA4**	66	10600	-
1.1	25.5	410	3.2	56.86	**BF50-../DHE09LA4**	90	9300	-
1.1	23	455	2.9	63.59	**BF50-../DHE09LA4**	90	9800	-
1.1	20	520	2.5	72.72	**BF50-../DHE09LA4**	90	10700	-
1.1	18	580	2.2	81.33	**BF50-../DHE09LA4**	90	11300	-

The torques marked (*) are maximum permissible torques for service factor f_B=1,0.

1.1 kW

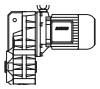

P_N	50 Hz			i	Type	m		
	n_2	M_2	f_B					
[kW]	[1/min]	[Nm]	[—]	[:1]		[kg]	[N]	[N]
1.1	16	650	2.0	90.24	**BF50-../DHE09LA4**	90	11800	-
1.1	14.5	720	1.8	100.9	**BF50-../DHE09LA4**	90	12300	-
1.1	13	800	1.65	114.0	**BF50-../DHE09LA4**	90	12900	-
1.1	11.5	910	1.45	127.5	**BF50-../DHE09LA4**	90	13600	-
1.1	10.5	1000	1.3	138.1	**BF50Z-../DHE09LA4**	95	13600	-
1.1	9.4	1110	1.15	154.5	**BF50Z-../DHE09LA4**	95	13600	-
1.1	7.9	1320	0.98	183.5	**BF50Z-../DHE09LA4**	95	13600	-
1.1	7.1	1470	0.88	205.2	**BF50Z-../DHE09LA4**	95	13600	-
1.1	14	750	3.1	103.7	**BF60-../DHE09LA4**	120	14100	39900
1.1	13	800	2.9	113.1	**BF60-../DHE09LA4**	120	14600	41300
1.1	11.5	910	2.5	125.5	**BF60-../DHE09LA4**	120	15300	43300
1.1	10.5	1000	2.3	140.8	**BF60Z-../DHE09LA4**	139	15300	43300
1.1	8.6	1220	1.9	169.2	**BF60Z-../DHE09LA4**	139	15300	43300
1.1	7.7	1360	1.7	187.7	**BF60Z-../DHE09LA4**	139	15300	43300
1.1	6.6	1590	1.45	221.4	**BF60Z-../DHE09LA4**	139	15300	43300
1.1	5.9	1780	1.3	245.6	**BF60Z-../DHE09LA4**	139	15300	43300
1.1	5.0	2100	1.1	293.4	**BF60Z-../DHE09LA4**	139	15300	43300
1.1	4.5	2300	1.0	325.6	**BF60Z-../DHE09LA4**	139	15300	43300
1.1	3.8	2750	0.84	380.0	**BF60Z-../DHE09LA4**	139	15300	43300
1.1	6.2	1690	3.1	233.0	**BF70Z-../DHE09LA4**	227	16100	47700
1.1	5.6	1870	2.8	258.7	**BF70Z-../DHE09LA4**	227	16100	47700
1.1	4.8	2150	2.4	301.8	**BF70Z-../DHE09LA4**	227	16100	47700
1.1	4.3	2400	2.2	341.7	**BF70Z-../DHE09LA4**	227	16100	47700
1.1	3.7	2800	1.85	398.7	**BF70Z-../DHE09LA4**	227	16100	47700
1.1	3.3	3150	1.65	439.2	**BF70Z-../DHE09LA4**	227	16100	47700
1.1	2.9	3600	1.45	512.4	**BF70Z-../DHE09LA4**	227	16100	47700
1.1	2.8	3500	1.65	524.1	**BF70G20-../DHE09LA4**	225	16100	47700
1.1	2.5	3950	1.45	577.5	**BF70G20-../DHE09LA4**	225	16100	47700
1.1	2.2	4450	1.3	673.6	**BF70G20-../DHE09LA4**	225	16100	47700
1.1	1.7	5900	0.97	872.1	**BF70G20-../DHE09LA4**	225	16100	47700
1.1	1.5	6700	0.85	1017	**BF70G20-../DHE09LA4**	225	16100	47700
1.1	3.2	3250	3.2	450.4	**BF80Z-../DHE09LA4**	344	39600	75000
1.1	2.9	3600	2.9	511.2	**BF80Z-../DHE09LA4**	344	39600	75000
1.1	2.5	4200	2.5	583.4	**BF80Z-../DHE09LA4**	344	39600	75000
1.1	2.2	4750	2.2	662.1	**BF80Z-../DHE09LA4**	344	39600	75000
1.1	1.9	5500	1.9	770.6	**BF80Z-../DHE09LA4**	344	39600	75000
1.1	1.7	6100	1.7	874.6	**BF80Z-../DHE09LA4**	344	39600	75000
1.1	1.5	7000	1.5	990.4	**BF80Z-../DHE09LA4**	344	39600	75000
1.1	1.3	8000	1.3	1124	**BF80Z-../DHE09LA4**	344	39600	75000
1.1	1.1	8100	1.3	1329	**BF80G40-../DHE09LA4**	349	39600	75000
1.1	1.0	9100	1.15	1491	**BF80G40-../DHE09LA4**	349	39600	75000
1.1	0.9	10000	1.05	1693	**BF80G40-../DHE09LA4**	349	39600	75000
1.1	1.8	5800	3.2	845.1	**BF90Z-../DHE09LA4**	608	42800	120000
1.1	1.4	6100	3.0	1043	**BF90G50-../DHE09LA4**	620	42800	120000
1.1	1.2	7100	2.6	1204	**BF90G50-../DHE09LA4**	620	42800	120000
1.1	1.0	9100	2.0	1444	**BF90G50-../DHE09LA4**	620	42800	120000
1.1	0.9	10000	1.85	1678	**BF90G50-../DHE09LA4**	620	42800	120000
1.1	0.8	11300	1.65	1867	**BF90G50-../DHE09LA4**	620	42800	120000
1.1	0.7	12900	1.45	2154	**BF90G50-../DHE09LA4**	620	42800	120000
1.1	0.55	16700	1.1	2656	**BF90G50-../DHE09LA4**	620	42800	120000

1.5 kW

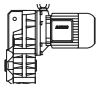

P_N	50 Hz			i	Type	m		
	n_2	M_2	f_B					
[kW]	[1/min]	[Nm]	[—]	[:1]		[kg]	[N]	[N]
1.5	260	55	2.5	5.60	**BF10-../DHE09XA4**	40	1950	-
1.5	190	75	2.0	7.58	**BF10-../DHE09XA4**	40	2200	-
1.5	149	96	1.85	9.69	**BF10-../DHE09XA4**	40	2350	-
1.5	122	117	1.55	11.84	**BF10-../DHE09XA4**	40	2500	-
1.5	96	149	1.25	15.04	**BF10-../DHE09XA4**	40	2800	-
1.5	79	181	1.35	18.23	**BF10-../DHE09XA4**	40	2900	-

The torques marked (*) are maximum permissible torques for service factor f_B=1,0.

1.5 kW

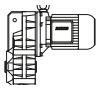

P_N	50 Hz			i	Type	m		
	n_2	M_2	f_B					
[kW]	[1/min]	[Nm]	[—]	[:1]		[kg]	[N]	[N]
1.5	72	198	1.2	20.05	**BF10-../DHE09XA4**	40	3000	-
1.5	62	230	1.05	23.28	**BF10-../DHE09XA4**	40	3200	-
1.5	57	250	0.96	25.60	**BF10-../DHE09XA4**	40	3350	-
1.5	51	280	0.86	28.47	**BF10-../DHE09XA4**	40	3450	-
1.5	180	79	2.8	8.00	**BF20-../DHE09XA4**	46	2850	-
1.5	138	103	2.5	10.51	**BF20-../DHE09XA4**	46	3100	-
1.5	110	130	2.2	13.18	**BF20-../DHE09XA4**	46	3300	-
1.5	93	154	2.0	15.54	**BF20-../DHE09XA4**	46	3450	-
1.5	86	166	2.2	16.77	**BF20-../DHE09XA4**	46	3500	-
1.5	79	181	2.0	18.45	**BF20-../DHE09XA4**	46	3600	-
1.5	66	215	1.85	22.04	**BF20-../DHE09XA4**	46	3800	-
1.5	60	235	1.7	24.25	**BF20-../DHE09XA4**	46	3950	-
1.5	53	270	1.55	27.62	**BF20-../DHE09XA4**	46	4150	-
1.5	47.5	300	1.4	30.40	**BF20-../DHE09XA4**	46	4400	-
1.5	44.5	320	1.3	32.58	**BF20-../DHE09XA4**	46	4450	-
1.5	40.5	350	1.2	35.85	**BF20-../DHE09XA4**	46	4650	-
1.5	35	405	1.05	41.72	**BF20-../DHE09XA4**	46	4950	-
1.5	31.5	450	0.93	45.90	**BF20-../DHE09XA4**	46	5100	-
1.5	30	475	0.88	48.56	**BF20-../DHE09XA4**	46	5200	-
1.5	145	98	3.3	9.99	**BF30-../DHE09XA4**	57	2850	-
1.5	112	127	2.9	12.91	**BF30-../DHE09XA4**	57	3050	-
1.5	90	159	2.6	16.00	**BF30-../DHE09XA4**	57	3250	-
1.5	82	174	2.8	17.65	**BF30-../DHE09XA4**	57	3300	-
1.5	75	191	2.6	19.41	**BF30-../DHE09XA4**	57	3400	-
1.5	66	215	2.5	21.85	**BF30-../DHE09XA4**	57	3500	-
1.5	60	235	2.4	24.03	**BF30-../DHE09XA4**	57	3600	-
1.5	52	275	2.1	28.23	**BF30-../DHE09XA4**	57	3800	-
1.5	46.5	305	1.9	31.05	**BF30-../DHE09XA4**	57	4000	-
1.5	41.5	345	1.65	35.00	**BF30-../DHE09XA4**	57	4200	-
1.5	37.5	380	1.5	38.49	**BF30-../DHE09XA4**	57	4400	-
1.5	35.5	400	1.45	41.01	**BF30-../DHE09XA4**	57	4500	-
1.5	32	445	1.3	45.10	**BF30-../DHE09XA4**	57	4700	-
1.5	28	510	1.15	52.20	**BF30-../DHE09XA4**	57	5000	-
1.5	25.5	560	1.05	57.41	**BF30-../DHE09XA4**	57	5200	-
1.5	24	590	0.97	61.17	**BF30-../DHE09XA4**	57	5300	-
1.5	21.5	660	0.87	67.28	**BF30-../DHE09XA4**	57	5500	-
1.5	20	710	0.81	72.13	**BF30-../DHE09XA4**	57	5700	-
1.5	67	210	3.3	21.60	**BF40-../DHE09XA4**	66	5200	-
1.5	61	230	3.2	23.77	**BF40-../DHE09XA4**	66	5400	-
1.5	54	265	2.9	26.86	**BF40-../DHE09XA4**	66	5600	-
1.5	49	290	2.8	29.55	**BF40-../DHE09XA4**	66	5800	-
1.5	42.5	335	2.6	34.21	**BF40-../DHE09XA4**	66	6000	-
1.5	38.5	370	2.4	37.64	**BF40-../DHE09XA4**	66	6200	-
1.5	35	405	2.2	41.42	**BF40-../DHE09XA4**	66	6500	-
1.5	32	445	2.0	45.56	**BF40-../DHE09XA4**	66	6800	-
1.5	29.5	485	1.85	48.92	**BF40-../DHE09XA4**	66	7000	-
1.5	27	530	1.7	53.82	**BF40-../DHE09XA4**	66	7200	-
1.5	24	590	1.55	61.25	**BF40-../DHE09XA4**	66	7600	-
1.5	21.5	660	1.35	67.38	**BF40-../DHE09XA4**	66	8000	-
1.5	20.5	690	1.3	71.40	**BF40-../DHE09XA4**	66	8100	-
1.5	18.5	770	1.15	78.55	**BF40-../DHE09XA4**	66	8500	-
1.5	17.5	810	1.1	83.91	**BF40-../DHE09XA4**	66	8700	-
1.5	16	890	1.0	92.31	**BF40-../DHE09XA4**	66	9100	-
1.5	14.5	980	0.92	101.0	**BF40-../DHE09XA4**	66	9400	-
1.5	13	1100	0.82	111.1	**BF40-../DHE09XA4**	66	9800	-
1.5	34.5	415	3.1	42.15	**BF50-../DHE09XA4**	94	8500	-
1.5	31	460	2.8	47.14	**BF50-../DHE09XA4**	94	8900	-
1.5	25.5	560	2.3	56.86	**BF50-../DHE09XA4**	94	9300	-
1.5	23	620	2.1	63.59	**BF50-../DHE09XA4**	94	9800	-
1.5	20	710	1.85	72.72	**BF50-../DHE09XA4**	94	10700	-
1.5	18	790	1.65	81.33	**BF50-../DHE09XA4**	94	11300	-
1.5	16	890	1.45	90.24	**BF50-../DHE09XA4**	94	11800	-
1.5	14.5	980	1.35	100.9	**BF50-../DHE09XA4**	94	12300	-
1.5	13	1100	1.2	114.0	**BF50-../DHE09XA4**	94	12900	-
1.5	11.5	1240	1.05	127.5	**BF50-../DHE09XA4**	94	13600	-
1.5	10.5	1360	0.96	138.1	**BF50Z-../DHE09XA4**	99	13600	-

The torques marked (*) are maximum permissible torques for service factor f_B=1,0.

1.5 kW

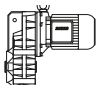

P_N	50 Hz			i	Type	m		
	n_2	M_2	f_B					
[kW]	[1/min]	[Nm]	[—]	[:1]		[kg]	[N]	[N]
1.5	9.4	1520	0.86	154.5	**BF50Z-../DHE09XA4**	99	13600	-
1.5	20	710	3.2	72.15	**BF60-../DHE09XA4**	124	12000	34000
1.5	18	790	2.9	80.05	**BF60-../DHE09XA4**	124	12600	35600
1.5	15.5	920	2.5	93.44	**BF60-../DHE09XA4**	124	13500	38200
1.5	14	1020	2.3	103.7	**BF60-../DHE09XA4**	124	14100	39900
1.5	13	1100	2.1	113.1	**BF60-../DHE09XA4**	124	14600	41300
1.5	11.5	1240	1.85	125.5	**BF60-../DHE09XA4**	124	15300	43300
1.5	10.5	1360	1.7	140.8	**BF60Z-../DHE09XA4**	143	15300	43300
1.5	8.6	1660	1.4	169.2	**BF60Z-../DHE09XA4**	143	15300	43300
1.5	7.7	1860	1.25	187.7	**BF60Z-../DHE09XA4**	143	15300	43300
1.5	6.6	2150	1.05	221.4	**BF60Z-../DHE09XA4**	143	15300	43300
1.5	5.9	2400	0.96	245.6	**BF60Z-../DHE09XA4**	143	15300	43300
1.5	5.0	2850	0.81	293.4	**BF60Z-../DHE09XA4**	143	15300	43300
1.5	8.1	1760	3.0	179.7	**BF70Z-../DHE09XA4**	231	16100	47700
1.5	7.3	1960	2.7	199.7	**BF70Z-../DHE09XA4**	231	16100	47700
1.5	6.2	2300	2.3	233.0	**BF70Z-../DHE09XA4**	231	16100	47700
1.5	5.6	2550	2.0	258.7	**BF70Z-../DHE09XA4**	231	16100	47700
1.5	4.8	2950	1.75	301.8	**BF70Z-../DHE09XA4**	231	16100	47700
1.5	4.3	3300	1.6	341.7	**BF70Z-../DHE09XA4**	231	16100	47700
1.5	3.7	3850	1.35	398.7	**BF70Z-../DHE09XA4**	231	16100	47700
1.5	3.3	4300	1.2	439.2	**BF70Z-../DHE09XA4**	231	16100	47700
1.5	2.9	4900	1.05	512.4	**BF70Z-../DHE09XA4**	231	16100	47700
1.5	2.8	4850	1.2	524.1	**BF70G20-../DHE09XA4**	229	16100	47700
1.5	2.5	5400	1.05	577.5	**BF70G20-../DHE09XA4**	229	16100	47700
1.5	2.2	6200	0.92	673.6	**BF70G20-../DHE09XA4**	229	16100	47700
1.5	4.2	3400	3.1	347.3	**BF80Z-../DHE09XA4**	348	39600	75000
1.5	3.7	3850	2.7	394.2	**BF80Z-../DHE09XA4**	348	39600	75000
1.5	3.2	4450	2.4	450.4	**BF80Z-../DHE09XA4**	348	39600	75000
1.5	2.9	4900	2.1	511.2	**BF80Z-../DHE09XA4**	348	39600	75000
1.5	2.5	5700	1.85	583.4	**BF80Z-../DHE09XA4**	348	39600	75000
1.5	2.2	6500	1.6	662.1	**BF80Z-../DHE09XA4**	348	39600	75000
1.5	1.9	7500	1.4	770.6	**BF80Z-../DHE09XA4**	348	39600	75000
1.5	1.7	8400	1.25	874.6	**BF80Z-../DHE09XA4**	348	39600	75000
1.5	1.5	9500	1.1	990.4	**BF80Z-../DHE09XA4**	348	39600	75000
1.5	1.3	11000	0.95	1124	**BF80Z-../DHE09XA4**	348	39600	75000
1.5	1.1	11500	0.91	1329	**BF80G40-../DHE09XA4**	353	39600	75000
1.5	1.0	12900	0.81	1491	**BF80G40-../DHE09XA4**	353	39600	75000
1.5	2.5	5700	3.2	591.1	**BF90Z-../DHE09XA4**	612	42800	120000
1.5	2.2	6500	2.8	658.1	**BF90Z-../DHE09XA4**	612	42800	120000
1.5	1.9	7500	2.5	759.0	**BF90Z-../DHE09XA4**	612	42800	120000
1.5	1.8	7900	2.3	845.1	**BF90Z-../DHE09XA4**	612	42800	120000
1.5	1.5	7900	2.3	976.1	**BF90G50-../DHE09XA4**	624	42800	120000
1.5	1.4	8800	2.1	1043	**BF90G50-../DHE09XA4**	624	42800	120000
1.5	1.2	10300	1.8	1204	**BF90G50-../DHE09XA4**	624	42800	120000
1.5	1.0	12900	1.45	1444	**BF90G50-../DHE09XA4**	624	42800	120000
1.5	0.9	14300	1.3	1678	**BF90G50-../DHE09XA4**	624	42800	120000
1.5	0.8	16100	1.15	1867	**BF90G50-../DHE09XA4**	624	42800	120000
1.5	0.7	18400	1.0	2154	**BF90G50-../DHE09XA4**	624	42800	120000

2.2 kW

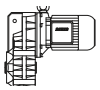

P_N	50 Hz			i	Type	m		
	n_2	M_2	f_B					
[kW]	[1/min]	[Nm]	[—]	[:1]		[kg]	[N]	[N]
2.2	260	80	1.75	5.60	**BF10-../DHE09XA4C**	43	1950	-
2.2	190	110	1.4	7.58	**BF10-../DHE09XA4C**	43	2200	-
2.2	149	141	1.25	9.69	**BF10-../DHE09XA4C**	43	2350	-
2.2	122	172	1.05	11.84	**BF10-../DHE09XA4C**	43	2500	-
2.2	96	215	0.85	15.04	**BF10-../DHE09XA4C**	43	2800	-
2.2	79	265	0.91	18.23	**BF10-../DHE09XA4C**	43	2900	-
2.2	72	290	0.83	20.05	**BF10-../DHE09XA4C**	43	3000	-

The torques marked (*) are maximum permissible torques for service factor f_B=1,0.

2.2 kW

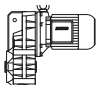

P_N	50 Hz			i	Type	m		
	n_2	M_2	f_B					
[kW]	[1/min]	[Nm]	[—]	[:1]		[kg]	[N]	[N]
2.2	240	87	2.3	6.04	**BF20-../DHE09XA4C**	49	2550	-
2.2	180	116	1.9	8.00	**BF20-../DHE09XA4C**	49	2850	-
2.2	138	152	1.7	10.51	**BF20-../DHE09XA4C**	49	3100	-
2.2	110	191	1.5	13.18	**BF20-../DHE09XA4C**	49	3300	-
2.2	93	225	1.35	15.54	**BF20-../DHE09XA4C**	49	3450	-
2.2	86	240	1.5	16.77	**BF20-../DHE09XA4C**	49	3500	-
2.2	79	265	1.4	18.45	**BF20-../DHE09XA4C**	49	3600	-
2.2	66	315	1.25	22.04	**BF20-../DHE09XA4C**	49	3800	-
2.2	60	350	1.15	24.25	**BF20-../DHE09XA4C**	49	3950	-
2.2	53	395	1.05	27.62	**BF20-../DHE09XA4C**	49	4150	-
2.2	47.5	440	0.95	30.40	**BF20-../DHE09XA4C**	49	4400	-
2.2	44.5	470	0.89	32.58	**BF20-../DHE09XA4C**	49	4450	-
2.2	40.5	510	0.82	35.85	**BF20-../DHE09XA4C**	49	4650	-
2.2	230	91	2.9	6.34	**BF30-../DHE09XA4C**	59	2400	-
2.2	179	117	2.4	8.07	**BF30-../DHE09XA4C**	59	2650	-
2.2	145	144	2.2	9.99	**BF30-../DHE09XA4C**	59	2850	-
2.2	112	187	1.95	12.91	**BF30-../DHE09XA4C**	59	3050	-
2.2	90	230	1.75	16.00	**BF30-../DHE09XA4C**	59	3250	-
2.2	82	255	1.9	17.65	**BF30-../DHE09XA4C**	59	3300	-
2.2	75	280	1.8	19.41	**BF30-../DHE09XA4C**	59	3400	-
2.2	66	315	1.7	21.85	**BF30-../DHE09XA4C**	59	3500	-
2.2	60	350	1.6	24.03	**BF30-../DHE09XA4C**	59	3600	-
2.2	52	400	1.45	28.23	**BF30-../DHE09XA4C**	59	3800	-
2.2	46.5	450	1.3	31.05	**BF30-../DHE09XA4C**	59	4000	-
2.2	41.5	500	1.15	35.00	**BF30-../DHE09XA4C**	59	4200	-
2.2	37.5	560	1.05	38.49	**BF30-../DHE09XA4C**	59	4400	-
2.2	35.5	590	0.97	41.01	**BF30-../DHE09XA4C**	59	4500	-
2.2	32	650	0.88	45.10	**BF30-../DHE09XA4C**	59	4700	-
2.2	189	111	3.3	7.62	**BF40-../DHE09XA4C**	69	3900	-
2.2	152	138	3.0	9.48	**BF40-../DHE09XA4C**	69	4150	-
2.2	123	170	2.7	11.79	**BF40-../DHE09XA4C**	69	4450	-
2.2	96	215	2.4	15.02	**BF40-../DHE09XA4C**	69	4800	-
2.2	83	250	2.5	17.35	**BF40-../DHE09XA4C**	69	4950	-
2.2	76	275	2.4	19.09	**BF40-../DHE09XA4C**	69	5100	-
2.2	67	310	2.3	21.60	**BF40-../DHE09XA4C**	69	5200	-
2.2	61	340	2.2	23.77	**BF40-../DHE09XA4C**	69	5400	-
2.2	54	385	2.0	26.86	**BF40-../DHE09XA4C**	69	5600	-
2.2	49	425	1.9	29.55	**BF40-../DHE09XA4C**	69	5800	-
2.2	42.5	490	1.75	34.21	**BF40-../DHE09XA4C**	69	6000	-
2.2	38.5	540	1.65	37.64	**BF40-../DHE09XA4C**	69	6200	-
2.2	35	600	1.5	41.42	**BF40-../DHE09XA4C**	69	6500	-
2.2	32	650	1.4	45.56	**BF40-../DHE09XA4C**	69	6800	-
2.2	29.5	710	1.25	48.92	**BF40-../DHE09XA4C**	69	7000	-
2.2	27	770	1.15	53.82	**BF40-../DHE09XA4C**	69	7200	-
2.2	24	870	1.05	61.25	**BF40-../DHE09XA4C**	69	7600	-
2.2	21.5	970	0.93	67.38	**BF40-../DHE09XA4C**	69	8000	-
2.2	20.5	1020	0.88	71.40	**BF40-../DHE09XA4C**	69	8100	-
2.2	18.5	1130	0.8	78.55	**BF40-../DHE09XA4C**	69	8500	-
2.2	56	375	3.1	25.88	**BF50-../DHE09XA4C**	97	7100	-
2.2	45.5	460	2.8	31.73	**BF50-../DHE09XA4C**	97	7500	-
2.2	41	510	2.5	35.49	**BF50-../DHE09XA4C**	97	7800	-
2.2	34.5	600	2.2	42.15	**BF50-../DHE09XA4C**	97	8500	-
2.2	31	670	1.95	47.14	**BF50-../DHE09XA4C**	97	8900	-
2.2	25.5	820	1.6	56.86	**BF50-../DHE09XA4C**	97	9300	-
2.2	23	910	1.45	63.59	**BF50-../DHE09XA4C**	97	9800	-
2.2	20	1050	1.25	72.72	**BF50-../DHE09XA4C**	97	10700	-
2.2	18	1160	1.1	81.33	**BF50-../DHE09XA4C**	97	11300	-
2.2	16	1310	0.99	90.24	**BF50-../DHE09XA4C**	97	11800	-
2.2	14.5	1440	0.9	100.9	**BF50-../DHE09XA4C**	97	12300	-
2.2	13	1610	0.81	114.0	**BF50-../DHE09XA4C**	97	12900	-
2.2	26.5	790	2.9	54.44	**BF60-../DHE09XA4C**	126	10500	29700
2.2	24	870	2.6	60.40	**BF60-../DHE09XA4C**	126	11100	31400
2.2	20	1050	2.2	72.15	**BF60-../DHE09XA4C**	126	12000	34000
2.2	18	1160	2.0	80.05	**BF60-../DHE09XA4C**	126	12600	35600
2.2	15.5	1350	1.7	93.44	**BF60-../DHE09XA4C**	126	13500	38200
2.2	14	1500	1.55	103.7	**BF60-../DHE09XA4C**	126	14100	39900

The torques marked (*) are maximum permissible torques for service factor f_B=1,0.

2.2 kW

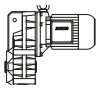

P_N	50 Hz			i	Type	m		
	n_2	M_2	f_B					
[kW]	[1/min]	[Nm]	[—]	[:1]		[kg]	[N]	[N]
2.2	13	1610	1.45	113.1	**BF60-../DHE09XA4C**	126	14600	41300
2.2	11.5	1820	1.25	125.5	**BF60-../DHE09XA4C**	126	15300	43300
2.2	10.5	2000	1.15	140.8	**BF60Z-../DHE09XA4C**	146	15300	43300
2.2	8.6	2400	0.96	169.2	**BF60Z-../DHE09XA4C**	146	15300	43300
2.2	7.7	2700	0.85	187.7	**BF60Z-../DHE09XA4C**	146	15300	43300
2.2	12	1750	3.0	122.7	**BF70-../DHE09XA4C**	213	16100	47700
2.2	11	1910	2.7	133.0	**BF70Z-../DHE09XA4C**	234	16100	47700
2.2	9.4	2200	2.4	154.0	**BF70Z-../DHE09XA4C**	234	16100	47700
2.2	8.1	2550	2.0	179.7	**BF70Z-../DHE09XA4C**	234	16100	47700
2.2	7.3	2850	1.8	199.7	**BF70Z-../DHE09XA4C**	234	16100	47700
2.2	6.2	3350	1.55	233.0	**BF70Z-../DHE09XA4C**	234	16100	47700
2.2	5.6	3750	1.4	258.7	**BF70Z-../DHE09XA4C**	234	16100	47700
2.2	4.8	4350	1.2	301.8	**BF70Z-../DHE09XA4C**	234	16100	47700
2.2	4.3	4850	1.05	341.7	**BF70Z-../DHE09XA4C**	234	16100	47700
2.2	3.7	5600	0.93	398.7	**BF70Z-../DHE09XA4C**	234	16100	47700
2.2	3.3	6300	0.83	439.2	**BF70Z-../DHE09XA4C**	234	16100	47700
2.2	6.9	3000	3.2	209.4	**BF80-../DHE09XA4C**	309	34300	75000
2.2	6.1	3400	2.8	237.1	**BF80-../DHE09XA4C**	309	36900	75000
2.2	5.4	3850	2.5	269.1	**BF80-../DHE09XA4C**	309	39600	75000
2.2	5.0	4200	2.5	291.7	**BF80Z-../DHE09XA4C**	350	39600	75000
2.2	4.2	5000	2.1	347.3	**BF80Z-../DHE09XA4C**	350	39600	75000
2.2	3.7	5600	1.9	394.2	**BF80Z-../DHE09XA4C**	350	39600	75000
2.2	3.2	6500	1.6	450.4	**BF80Z-../DHE09XA4C**	350	39600	75000
2.2	2.9	7200	1.45	511.2	**BF80Z-../DHE09XA4C**	350	39600	75000
2.2	2.5	8400	1.25	583.4	**BF80Z-../DHE09XA4C**	350	39600	75000
2.2	2.2	9500	1.1	662.1	**BF80Z-../DHE09XA4C**	350	39600	75000
2.2	1.9	11000	0.95	770.6	**BF80Z-../DHE09XA4C**	350	39600	75000
2.2	1.7	12300	0.85	874.6	**BF80Z-../DHE09XA4C**	350	39600	75000
2.2	3.2	6500	2.8	456.7	**BF90Z-../DHE09XA4C**	614	42800	120000
2.2	2.9	7200	2.6	508.5	**BF90Z-../DHE09XA4C**	614	42800	120000
2.2	2.5	8400	2.2	591.1	**BF90Z-../DHE09XA4C**	614	42800	120000
2.2	2.2	9500	1.95	658.1	**BF90Z-../DHE09XA4C**	614	42800	120000
2.2	1.9	11000	1.7	759.0	**BF90Z-../DHE09XA4C**	614	42800	120000
2.2	1.8	11600	1.6	845.1	**BF90Z-../DHE09XA4C**	614	42800	120000
2.2	1.5	12400	1.5	976.1	**BF90G50-../DHE09XA4C**	626	42800	120000
2.2	1.4	13600	1.35	1043	**BF90G50-../DHE09XA4C**	626	42800	120000
2.2	1.2	15900	1.15	1204	**BF90G50-../DHE09XA4C**	626	42800	120000
2.2	1.0	19600	0.94	1444	**BF90G50-../DHE09XA4C**	626	42800	120000

3 kW

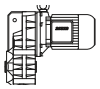

P_N	50 Hz			i	Type	m		
	n_2	M_2	f_B					
[kW]	[1/min]	[Nm]	[—]	[:1]		[kg]	[N]	[N]
3	230	124	2.1	6.34	**BF30-../DHE11MA4**	66	2400	-
3	179	160	1.8	8.07	**BF30-../DHE11MA4**	66	2650	-
3	145	197	1.6	9.99	**BF30-../DHE11MA4**	66	2850	-
3	112	255	1.45	12.91	**BF30-../DHE11MA4**	66	3050	-
3	90	315	1.3	16.00	**BF30-../DHE11MA4**	66	3250	-
3	82	345	1.4	17.65	**BF30-../DHE11MA4**	66	3300	-
3	75	380	1.3	19.41	**BF30-../DHE11MA4**	66	3400	-
3	66	430	1.25	21.85	**BF30-../DHE11MA4**	66	3500	-
3	60	475	1.15	24.03	**BF30-../DHE11MA4**	66	3600	-
3	52	550	1.05	28.23	**BF30-../DHE11MA4**	66	3800	-
3	46.5	610	0.94	31.05	**BF30-../DHE11MA4**	66	4000	-
3	41.5	690	0.83	35.00	**BF30-../DHE11MA4**	66	4200	-
3	250	114	2.9	5.87	**BF40-../DHE11MA4**	80	3550	-
3	189	151	2.4	7.62	**BF40-../DHE11MA4**	80	3900	-
3	152	188	2.2	9.48	**BF40-../DHE11MA4**	80	4150	-
3	123	230	2.0	11.79	**BF40-../DHE11MA4**	80	4450	-
3	96	295	1.75	15.02	**BF40-../DHE11MA4**	80	4800	-
3	83	345	1.85	17.35	**BF40-../DHE11MA4**	80	4950	-

The torques marked (*) are maximum permissible torques for service factor f_B=1,0.

3 kW

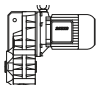

P_N	50 Hz			i	Type	m		
	n_2	M_2	f_B					
[kW]	[1/min]	[Nm]	[—]	[:1]		[kg]	[N]	[N]
3	76	375	1.75	19.09	**BF40-../DHE11MA4**	80	5100	-
3	67	425	1.65	21.60	**BF40-../DHE11MA4**	80	5200	-
3	61	465	1.6	23.77	**BF40-../DHE11MA4**	80	5400	-
3	54	530	1.45	26.86	**BF40-../DHE11MA4**	80	5600	-
3	49	580	1.4	29.55	**BF40-../DHE11MA4**	80	5800	-
3	42.5	670	1.3	34.21	**BF40-../DHE11MA4**	80	6000	-
3	38.5	740	1.2	37.64	**BF40-../DHE11MA4**	80	6200	-
3	35	810	1.1	41.42	**BF40-../DHE11MA4**	80	6500	-
3	32	890	1.0	45.56	**BF40-../DHE11MA4**	80	6800	-
3	29.5	970	0.93	48.92	**BF40-../DHE11MA4**	80	7000	-
3	27	1060	0.85	53.82	**BF40-../DHE11MA4**	80	7200	-
3	135	210	3.2	10.68	**BF50-../DHE11MA4**	110	5600	-
3	99	285	2.8	14.65	**BF50-../DHE11MA4**	110	6100	-
3	87	325	2.9	16.70	**BF50-../DHE11MA4**	110	6200	-
3	78	365	2.7	18.68	**BF50-../DHE11MA4**	110	6400	-
3	63	450	2.5	23.14	**BF50-../DHE11MA4**	110	6800	-
3	56	510	2.3	25.88	**BF50-../DHE11MA4**	110	7100	-
3	45.5	620	2.0	31.73	**BF50-../DHE11MA4**	110	7500	-
3	41	690	1.9	35.49	**BF50-../DHE11MA4**	110	7800	-
3	34.5	830	1.55	42.15	**BF50-../DHE11MA4**	110	8500	-
3	31	920	1.4	47.14	**BF50-../DHE11MA4**	110	8900	-
3	25.5	1120	1.15	56.86	**BF50-../DHE11MA4**	110	9300	-
3	23	1240	1.05	63.59	**BF50-../DHE11MA4**	110	9800	-
3	20	1430	0.91	72.72	**BF50-../DHE11MA4**	110	10700	-
3	18	1590	0.82	81.33	**BF50-../DHE11MA4**	110	11300	-
3	46.5	610	3.1	31.20	**BF60-../DHE11MA4**	141	8800	24900
3	42	680	2.9	34.62	**BF60-../DHE11MA4**	141	9100	25700
3	35	810	2.6	41.60	**BF60-../DHE11MA4**	141	9600	27100
3	31.5	900	2.5	46.16	**BF60-../DHE11MA4**	141	9900	28000
3	26.5	1080	2.1	54.44	**BF60-../DHE11MA4**	141	10500	29700
3	24	1190	1.95	60.40	**BF60-../DHE11MA4**	141	11100	31400
3	20	1430	1.6	72.15	**BF60-../DHE11MA4**	141	12000	34000
3	18	1590	1.45	80.05	**BF60-../DHE11MA4**	141	12600	35600
3	15.5	1840	1.25	93.44	**BF60-../DHE11MA4**	141	13500	38200
3	14	2000	1.15	103.7	**BF60-../DHE11MA4**	141	14100	39900
3	13	2200	1.05	113.1	**BF60-../DHE11MA4**	141	14600	41300
3	11.5	2450	0.94	125.5	**BF60-../DHE11MA4**	141	15300	43300
3	10.5	2700	0.85	140.8	**BF60Z-../DHE11MA4**	157	15300	43300
3	18	1590	3.3	81.82	**BF70-../DHE11MA4**	220	12800	41300
3	15.5	1840	2.8	95.46	**BF70-../DHE11MA4**	220	14000	43700
3	14	2000	2.6	105.2	**BF70-../DHE11MA4**	220	14700	45100
3	12	2350	2.2	122.7	**BF70-../DHE11MA4**	220	16100	47700
3	11	2600	2.0	133.0	**BF70Z-../DHE11MA4**	247	16100	47700
3	9.4	3000	1.75	154.0	**BF70Z-../DHE11MA4**	247	16100	47700
3	8.1	3500	1.5	179.7	**BF70Z-../DHE11MA4**	247	16100	47700
3	7.3	3900	1.35	199.7	**BF70Z-../DHE11MA4**	247	16100	47700
3	6.2	4600	1.15	233.0	**BF70Z-../DHE11MA4**	247	16100	47700
3	5.6	5100	1.0	258.7	**BF70Z-../DHE11MA4**	247	16100	47700
3	4.8	5900	0.88	301.8	**BF70Z-../DHE11MA4**	247	16100	47700
3	9.1	3100	3.1	158.5	**BF80-../DHE11MA4**	316	29000	75000
3	7.9	3600	2.6	184.5	**BF80-../DHE11MA4**	316	31800	75000
3	6.9	4150	2.3	209.4	**BF80-../DHE11MA4**	316	34300	75000
3	6.1	4650	2.0	237.1	**BF80-../DHE11MA4**	316	36900	75000
3	5.4	5300	1.8	269.1	**BF80-../DHE11MA4**	316	39600	75000
3	5.0	5700	1.85	291.7	**BF80Z-../DHE11MA4**	363	39600	75000
3	4.2	6800	1.55	347.3	**BF80Z-../DHE11MA4**	363	39600	75000
3	3.7	7700	1.35	394.2	**BF80Z-../DHE11MA4**	363	39600	75000
3	3.2	8900	1.2	450.4	**BF80Z-../DHE11MA4**	363	39600	75000
3	2.9	9800	1.05	511.2	**BF80Z-../DHE11MA4**	363	39600	75000
3	2.5	11400	0.92	583.4	**BF80Z-../DHE11MA4**	363	39600	75000
3	2.2	13000	0.81	662.1	**BF80Z-../DHE11MA4**	363	39600	75000
3	5.6	5100	3.3	259.0	**BF90-../DHE11MA4**	569	42800	120000
3	4.8	5900	3.1	300.4	**BF90Z-../DHE11MA4**	629	42800	120000
3	4.2	6800	2.7	343.6	**BF90Z-../DHE11MA4**	629	42800	120000
3	3.8	7500	2.5	382.6	**BF90Z-../DHE11MA4**	629	42800	120000

The torques marked (*) are maximum permissible torques for service factor f_B=1,0.

3 kW

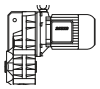

P_N	50 Hz			i	Type	m		
	n_2	M_2	f_B					
[kW]	[1/min]	[Nm]	[—]	[:1]		[kg]	[N]	[N]
3	3.2	8900	2.1	456.7	**BF90Z-../DHE11MA4**	629	42800	120000
3	2.9	9800	1.9	508.5	**BF90Z-../DHE11MA4**	629	42800	120000
3	2.5	11400	1.6	591.1	**BF90Z-../DHE11MA4**	629	42800	120000
3	2.2	13000	1.4	658.1	**BF90Z-../DHE11MA4**	629	42800	120000
3	1.9	15000	1.25	759.0	**BF90Z-../DHE11MA4**	629	42800	120000
3	1.8	15900	1.15	845.1	**BF90Z-../DHE11MA4**	629	42800	120000
3	1.5	17500	1.05	976.1	**BF90G50-../DHE11MA4**	639	42800	120000
3	1.4	19000	0.97	1043	**BF90G50-../DHE11MA4**	639	42800	120000
3	1.2	22200	0.83	1204	**BF90G50-../DHE11MA4**	639	42800	120000

4 kW

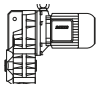

P_N	50 Hz			i	Type	m		
	n_2	M_2	f_B					
[kW]	[1/min]	[Nm]	[—]	[:1]		[kg]	[N]	[N]
4	230	166	1.6	6.34	**BF30-../DHE11LA4**	78	2400	-
4	179	210	1.35	8.07	**BF30-../DHE11LA4**	78	2650	-
4	145	260	1.25	9.99	**BF30-../DHE11LA4**	78	2850	-
4	112	340	1.1	12.91	**BF30-../DHE11LA4**	78	3050	-
4	90	420	0.97	16.00	**BF30-../DHE11LA4**	78	3250	-
4	82	465	1.05	17.65	**BF30-../DHE11LA4**	78	3300	-
4	75	500	1.0	19.41	**BF30-../DHE11LA4**	78	3400	-
4	66	570	0.93	21.85	**BF30-../DHE11LA4**	78	3500	-
4	60	630	0.88	24.03	**BF30-../DHE11LA4**	78	3600	-
4	250	152	2.2	5.87	**BF40-../DHE11LA4**	92	3550	-
4	189	200	1.85	7.62	**BF40-../DHE11LA4**	92	3900	-
4	152	250	1.65	9.48	**BF40-../DHE11LA4**	92	4150	-
4	123	310	1.5	11.79	**BF40-../DHE11LA4**	92	4450	-
4	96	395	1.3	15.02	**BF40-../DHE11LA4**	92	4800	-
4	83	460	1.4	17.35	**BF40-../DHE11LA4**	92	4950	-
4	76	500	1.35	19.09	**BF40-../DHE11LA4**	92	5100	-
4	67	570	1.25	21.60	**BF40-../DHE11LA4**	92	5200	-
4	61	620	1.2	23.77	**BF40-../DHE11LA4**	92	5400	-
4	54	700	1.1	26.86	**BF40-../DHE11LA4**	92	5600	-
4	49	770	1.05	29.55	**BF40-../DHE11LA4**	92	5800	-
4	42.5	890	0.96	34.21	**BF40-../DHE11LA4**	92	6000	-
4	38.5	990	0.9	37.64	**BF40-../DHE11LA4**	92	6200	-
4	35	1090	0.83	41.42	**BF40-../DHE11LA4**	92	6500	-
4	187	200	2.8	7.71	**BF50-../DHE11LA4**	122	5100	-
4	135	280	2.4	10.68	**BF50-../DHE11LA4**	122	5600	-
4	99	385	2.1	14.65	**BF50-../DHE11LA4**	122	6100	-
4	87	435	2.2	16.70	**BF50-../DHE11LA4**	122	6200	-
4	78	485	2.1	18.68	**BF50-../DHE11LA4**	122	6400	-
4	63	600	1.85	23.14	**BF50-../DHE11LA4**	122	6800	-
4	56	680	1.7	25.88	**BF50-../DHE11LA4**	122	7100	-
4	45.5	830	1.55	31.73	**BF50-../DHE11LA4**	122	7500	-
4	41	930	1.4	35.49	**BF50-../DHE11LA4**	122	7800	-
4	34.5	1100	1.2	42.15	**BF50-../DHE11LA4**	122	8500	-
4	31	1230	1.05	47.14	**BF50-../DHE11LA4**	122	8900	-
4	25.5	1490	0.87	56.86	**BF50-../DHE11LA4**	122	9300	-
4	102	370	3.2	14.24	**BF60-../DHE11LA4**	153	7100	20000
4	85	445	3.3	16.96	**BF60-../DHE11LA4**	153	7300	20600
4	77	495	3.1	18.81	**BF60-../DHE11LA4**	153	7600	21500
4	64	590	2.8	22.58	**BF60-../DHE11LA4**	153	8000	22600
4	58	650	2.7	25.05	**BF60-../DHE11LA4**	153	8200	23200
4	46.5	820	2.3	31.20	**BF60-../DHE11LA4**	153	8800	24900
4	42	900	2.2	34.62	**BF60-../DHE11LA4**	153	9100	25700
4	35	1090	1.95	41.60	**BF60-../DHE11LA4**	153	9600	27100
4	31.5	1210	1.85	46.16	**BF60-../DHE11LA4**	153	9900	28000
4	26.5	1440	1.6	54.44	**BF60-../DHE11LA4**	153	10500	29700
4	24	1590	1.45	60.40	**BF60-../DHE11LA4**	153	11100	31400
4	20	1910	1.2	72.15	**BF60-../DHE11LA4**	153	12000	34000
4	18	2100	1.1	80.05	**BF60-../DHE11LA4**	153	12600	35600

The torques marked (*) are maximum permissible torques for service factor f_B=1,0.

4 kW

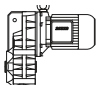

P_N	50 Hz			i	Type	m		
	n_2	M_2	f_B					
[kW]	[1/min]	[Nm]	[—]	[:1]		[kg]	[N]	[N]
4	15.5	2450	0.94	93.44	**BF60-../DHE11LA4**	153	13500	38200
4	14	2700	0.85	103.7	**BF60-../DHE11LA4**	153	14100	39900
4	23.5	1620	3.2	61.94	**BF70-../DHE11LA4**	232	10800	37400
4	20	1910	2.7	72.26	**BF70-../DHE11LA4**	232	12000	39600
4	18	2100	2.5	81.82	**BF70-../DHE11LA4**	232	12800	41300
4	15.5	2450	2.1	95.46	**BF70-../DHE11LA4**	232	14000	43700
4	14	2700	1.95	105.2	**BF70-../DHE11LA4**	232	14700	45100
4	12	3150	1.65	122.7	**BF70-../DHE11LA4**	232	16100	47700
4	11	3450	1.5	133.0	**BF70Z-../DHE11LA4**	258	16100	47700
4	9.4	4050	1.3	154.0	**BF70Z-../DHE11LA4**	258	16100	47700
4	8.1	4700	1.1	179.7	**BF70Z-../DHE11LA4**	258	16100	47700
4	7.3	5200	1.0	199.7	**BF70Z-../DHE11LA4**	258	16100	47700
4	6.2	6100	0.85	233.0	**BF70Z-../DHE11LA4**	258	16100	47700
4	12	3150	3.0	122.4	**BF80-../DHE11LA4**	328	24500	75000
4	10.5	3600	2.6	139.7	**BF80-../DHE11LA4**	328	26700	75000
4	9.1	4150	2.3	158.5	**BF80-../DHE11LA4**	328	29000	75000
4	7.9	4800	2.0	184.5	**BF80-../DHE11LA4**	328	31800	75000
4	6.9	5500	1.75	209.4	**BF80-../DHE11LA4**	328	34300	75000
4	6.1	6200	1.55	237.1	**BF80-../DHE11LA4**	328	36900	75000
4	5.4	7000	1.35	269.1	**BF80-../DHE11LA4**	328	39600	75000
4	5.0	7600	1.4	291.7	**BF80Z-../DHE11LA4**	375	39600	75000
4	4.2	9000	1.15	347.3	**BF80Z-../DHE11LA4**	375	39600	75000
4	3.7	10300	1.0	394.2	**BF80Z-../DHE11LA4**	375	39600	75000
4	3.2	11900	0.88	450.4	**BF80Z-../DHE11LA4**	375	39600	75000
4	2.9	13100	0.8	511.2	**BF80Z-../DHE11LA4**	375	39600	75000
4	7.3	5200	3.2	198.8	**BF90-../DHE11LA4**	581	36000	111300
4	6.2	6100	2.8	232.6	**BF90-../DHE11LA4**	581	39900	118300
4	5.6	6800	2.5	259.0	**BF90-../DHE11LA4**	581	42800	120000
4	5.4	7000	2.6	269.8	**BF90Z-../DHE11LA4**	641	42800	120000
4	4.8	7900	2.3	300.4	**BF90Z-../DHE11LA4**	641	42800	120000
4	4.2	9000	2.1	343.6	**BF90Z-../DHE11LA4**	641	42800	120000
4	3.8	10000	1.85	382.6	**BF90Z-../DHE11LA4**	641	42800	120000
4	3.2	11900	1.55	456.7	**BF90Z-../DHE11LA4**	641	42800	120000
4	2.9	13100	1.4	508.5	**BF90Z-../DHE11LA4**	641	42800	120000
4	2.5	15200	1.2	591.1	**BF90Z-../DHE11LA4**	641	42800	120000
4	2.2	17300	1.05	658.1	**BF90Z-../DHE11LA4**	641	42800	120000
4	1.9	20100	0.92	759.0	**BF90Z-../DHE11LA4**	641	42800	120000
4	1.8	21200	0.87	845.1	**BF90Z-../DHE11LA4**	641	42800	120000

5.5 kW

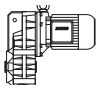

P_N	50 Hz			i	Type	m		
	n_2	M_2	f_B					
[kW]	[1/min]	[Nm]	[—]	[:1]		[kg]	[N]	[N]
5.5	235	220	1.2	6.34	**BF30-../DHE11LA4C**	82	2400	-
5.5	181	290	0.99	8.07	**BF30-../DHE11LA4C**	82	2650	-
5.5	147	355	0.9	9.99	**BF30-../DHE11LA4C**	82	2850	-
5.5	114	460	0.8	12.91	**BF30-../DHE11LA4C**	82	3050	-
5.5	250	210	1.6	5.87	**BF40-../DHE11LA4C**	96	3550	-
5.5	192	270	1.35	7.62	**BF40-../DHE11LA4C**	96	3900	-
5.5	155	335	1.25	9.48	**BF40-../DHE11LA4C**	96	4150	-
5.5	124	420	1.1	11.79	**BF40-../DHE11LA4C**	96	4450	-
5.5	98	530	0.98	15.02	**BF40-../DHE11LA4C**	96	4800	-
5.5	85	610	1.05	17.35	**BF40-../DHE11LA4C**	96	4950	-
5.5	77	680	0.98	19.09	**BF40-../DHE11LA4C**	96	5100	-
5.5	68	770	0.91	21.60	**BF40-../DHE11LA4C**	96	5200	-
5.5	62	840	0.88	23.77	**BF40-../DHE11LA4C**	96	5400	-
5.5	55	950	0.82	26.86	**BF40-../DHE11LA4C**	96	5600	-
5.5	275	191	2.6	5.38	**BF50-../DHE11LA4C**	126	4500	-
5.5	190	275	2.1	7.71	**BF50-../DHE11LA4C**	126	5100	-
5.5	137	380	1.8	10.68	**BF50-../DHE11LA4C**	126	5600	-

The torques marked (*) are maximum permissible torques for service factor f_B=1,0.

5.5 kW

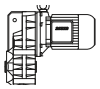

P_N	50 Hz			i	Type	m		
	n_2	M_2	f_B					
[kW]	[1/min]	[Nm]	[—]	[:1]		[kg]	[N]	[N]
5.5	100	520	1.5	14.65	**BF50-../DHE11LA4C**	126	6100	-
5.5	88	590	1.6	16.70	**BF50-../DHE11LA4C**	126	6200	-
5.5	79	660	1.5	18.68	**BF50-../DHE11LA4C**	126	6400	-
5.5	64	820	1.35	23.14	**BF50-../DHE11LA4C**	126	6800	-
5.5	57	920	1.25	25.88	**BF50-../DHE11LA4C**	126	7100	-
5.5	46.5	1120	1.15	31.73	**BF50-../DHE11LA4C**	126	7500	-
5.5	41.5	1260	1.05	35.49	**BF50-../DHE11LA4C**	126	7800	-
5.5	35	1500	0.87	42.15	**BF50-../DHE11LA4C**	126	8500	-
5.5	189	275	3.2	7.74	**BF60-../DHE11LA4C**	157	6000	16900
5.5	142	365	2.8	10.31	**BF60-../DHE11LA4C**	157	6500	18400
5.5	103	500	2.4	14.24	**BF60-../DHE11LA4C**	157	7100	20000
5.5	87	600	2.4	16.96	**BF60-../DHE11LA4C**	157	7300	20600
5.5	78	670	2.3	18.81	**BF60-../DHE11LA4C**	157	7600	21500
5.5	65	800	2.1	22.58	**BF60-../DHE11LA4C**	157	8000	22600
5.5	59	890	1.95	25.05	**BF60-../DHE11LA4C**	157	8200	23200
5.5	47	1110	1.7	31.20	**BF60-../DHE11LA4C**	157	8800	24900
5.5	42.5	1230	1.6	34.62	**BF60-../DHE11LA4C**	157	9100	25700
5.5	35.5	1470	1.45	41.60	**BF60-../DHE11LA4C**	157	9600	27100
5.5	32	1640	1.35	46.16	**BF60-../DHE11LA4C**	157	9900	28000
5.5	27	1940	1.2	54.44	**BF60-../DHE11LA4C**	157	10500	29700
5.5	24.5	2100	1.1	60.40	**BF60-../DHE11LA4C**	157	11100	31400
5.5	20.5	2550	0.9	72.15	**BF60-../DHE11LA4C**	157	12000	34000
5.5	18.5	2800	0.82	80.05	**BF60-../DHE11LA4C**	157	12600	35600
5.5	31	1690	3.1	47.82	**BF70-../DHE11LA4C**	236	9100	34000
5.5	26.5	1980	2.6	55.79	**BF70-../DHE11LA4C**	236	10200	36000
5.5	24	2150	2.4	61.94	**BF70-../DHE11LA4C**	236	10800	37400
5.5	20.5	2550	2.0	72.26	**BF70-../DHE11LA4C**	236	12000	39600
5.5	18	2900	1.8	81.82	**BF70-../DHE11LA4C**	236	12800	41300
5.5	15.5	3350	1.55	95.46	**BF70-../DHE11LA4C**	236	14000	43700
5.5	14	3750	1.4	105.2	**BF70-../DHE11LA4C**	236	14700	45100
5.5	12	4350	1.2	122.7	**BF70-../DHE11LA4C**	236	16100	47700
5.5	11	4750	1.1	133.0	**BF70Z-../DHE11LA4C**	262	16100	47700
5.5	9.5	5500	0.95	154.0	**BF70Z-../DHE11LA4C**	262	16100	47700
5.5	8.2	6400	0.81	179.7	**BF70Z-../DHE11LA4C**	262	16100	47700
5.5	18	2900	3.3	83.16	**BF80-../DHE11LA4C**	332	18400	65100
5.5	15.5	3350	2.8	94.38	**BF80-../DHE11LA4C**	332	20300	68500
5.5	14	3750	2.5	107.9	**BF80-../DHE11LA4C**	332	22400	72300
5.5	12	4350	2.2	122.4	**BF80-../DHE11LA4C**	332	24500	75000
5.5	10.5	5000	1.9	139.7	**BF80-../DHE11LA4C**	332	26700	75000
5.5	9.3	5600	1.7	158.5	**BF80-../DHE11LA4C**	332	29000	75000
5.5	8.0	6500	1.45	184.5	**BF80-../DHE11LA4C**	332	31800	75000
5.5	7.0	7500	1.25	209.4	**BF80-../DHE11LA4C**	332	34300	75000
5.5	6.2	8400	1.15	237.1	**BF80-../DHE11LA4C**	332	36900	75000
5.5	5.5	9500	1.0	269.1	**BF80-../DHE11LA4C**	332	39600	75000
5.5	5.1	10200	1.05	291.7	**BF80Z-../DHE11LA4C**	379	39600	75000
5.5	4.3	12200	0.86	347.3	**BF80Z-../DHE11LA4C**	379	39600	75000
5.5	9.5	5500	3.1	154.8	**BF90-../DHE11LA4C**	585	30100	100800
5.5	8.2	6400	2.6	178.6	**BF90-../DHE11LA4C**	585	33400	106700
5.5	7.4	7000	2.4	198.8	**BF90-../DHE11LA4C**	585	36000	111300
5.5	6.3	8300	2.0	232.6	**BF90-../DHE11LA4C**	585	39900	118300
5.5	5.7	9200	1.85	259.0	**BF90-../DHE11LA4C**	585	42800	120000
5.5	5.5	9500	1.95	269.8	**BF90Z-../DHE11LA4C**	645	42800	120000
5.5	4.9	10700	1.75	300.4	**BF90Z-../DHE11LA4C**	645	42800	120000
5.5	4.3	12200	1.5	343.6	**BF90Z-../DHE11LA4C**	645	42800	120000
5.5	3.9	13400	1.4	382.6	**BF90Z-../DHE11LA4C**	645	42800	120000
5.5	3.2	16400	1.15	456.7	**BF90Z-../DHE11LA4C**	645	42800	120000
5.5	2.9	18100	1.0	508.5	**BF90Z-../DHE11LA4C**	645	42800	120000
5.5	2.5	21000	0.88	591.1	**BF90Z-../DHE11LA4C**	645	42800	120000
5.5	2.3	22800	0.81	658.1	**BF90Z-../DHE11LA4C**	645	42800	120000

The torques marked (*) are maximum permissible torques for service factor f_B=1,0.

7.5 kW

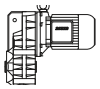

P_N	50 Hz			i	Type	m		
	n_2	M_2	f_B					
[kW]	[1/min]	[Nm]	[—]	[:1]		[kg]	[N]	[N]
7.5	275	260	1.9	5.38	**BF50-../DHE13LA4**	136	4500	-
7.5	190	375	1.5	7.71	**BF50-../DHE13LA4**	136	5100	-
7.5	137	520	1.3	10.68	**BF50-../DHE13LA4**	136	5600	-
7.5	100	710	1.1	14.65	**BF50-../DHE13LA4**	136	6100	-
7.5	88	810	1.15	16.70	**BF50-../DHE13LA4**	136	6200	-
7.5	79	900	1.1	18.68	**BF50-../DHE13LA4**	136	6400	-
7.5	64	1110	1.0	23.14	**BF50-../DHE13LA4**	136	6800	-
7.5	57	1250	0.93	25.88	**BF50-../DHE13LA4**	136	7100	-
7.5	46.5	1540	0.82	31.73	**BF50-../DHE13LA4**	136	7500	-
7.5	280	255	3.0	5.22	**BF60-../DHE13LA4**	169	5200	14800
7.5	189	375	2.3	7.74	**BF60-../DHE13LA4**	169	6000	16900
7.5	142	500	2.0	10.31	**BF60-../DHE13LA4**	169	6500	18400
7.5	103	690	1.75	14.24	**BF60-../DHE13LA4**	169	7100	20000
7.5	87	820	1.75	16.96	**BF60-../DHE13LA4**	169	7300	20600
7.5	78	910	1.65	18.81	**BF60-../DHE13LA4**	169	7600	21500
7.5	65	1100	1.5	22.58	**BF60-../DHE13LA4**	169	8000	22600
7.5	59	1210	1.45	25.05	**BF60-../DHE13LA4**	169	8200	23200
7.5	47	1520	1.25	31.20	**BF60-../DHE13LA4**	169	8800	24900
7.5	42.5	1680	1.2	34.62	**BF60-../DHE13LA4**	169	9100	25700
7.5	35.5	2000	1.05	41.60	**BF60-../DHE13LA4**	169	9600	27100
7.5	32	2200	1.0	46.16	**BF60-../DHE13LA4**	169	9900	28000
7.5	27	2650	0.87	54.44	**BF60-../DHE13LA4**	169	10500	29700
7.5	40	1790	2.9	36.88	**BF70-../DHE13LA4**	248	7900	31100
7.5	34	2100	2.5	43.02	**BF70-../DHE13LA4**	248	8700	32800
7.5	31	2300	2.3	47.82	**BF70-../DHE13LA4**	248	9100	34000
7.5	26.5	2700	1.95	55.79	**BF70-../DHE13LA4**	248	10200	36000
7.5	24	2950	1.75	61.94	**BF70-../DHE13LA4**	248	10800	37400
7.5	20.5	3450	1.5	72.26	**BF70-../DHE13LA4**	248	12000	39600
7.5	18	3950	1.3	81.82	**BF70-../DHE13LA4**	248	12800	41300
7.5	15.5	4600	1.15	95.46	**BF70-../DHE13LA4**	248	14000	43700
7.5	14	5100	1.0	105.2	**BF70-../DHE13LA4**	248	14700	45100
7.5	12	5900	0.88	122.7	**BF70-../DHE13LA4**	248	16100	47700
7.5	11	6500	0.8	133.0	**BF70Z-../DHE13LA4**	273	16100	47700
7.5	24	2950	3.2	61.55	**BF80-../DHE13LA4**	344	14800	58100
7.5	21	3400	2.8	69.86	**BF80-../DHE13LA4**	344	15900	60600
7.5	18	3950	2.4	83.16	**BF80-../DHE13LA4**	344	18400	65100
7.5	15.5	4600	2.1	94.38	**BF80-../DHE13LA4**	344	20300	68500
7.5	14	5100	1.85	107.9	**BF80-../DHE13LA4**	344	22400	72300
7.5	12	5900	1.6	122.4	**BF80-../DHE13LA4**	344	24500	75000
7.5	10.5	6800	1.4	139.7	**BF80-../DHE13LA4**	344	26700	75000
7.5	9.3	7700	1.25	158.5	**BF80-../DHE13LA4**	344	29000	75000
7.5	8.0	8900	1.05	184.5	**BF80-../DHE13LA4**	344	31800	75000
7.5	7.0	10200	0.93	209.4	**BF80-../DHE13LA4**	344	34300	75000
7.5	6.2	11500	0.83	237.1	**BF80-../DHE13LA4**	344	36900	75000
7.5	14	5100	3.3	107.5	**BF90-../DHE13LA4**	596	22300	86900
7.5	12.5	5700	2.9	119.7	**BF90-../DHE13LA4**	596	24500	90800
7.5	10.5	6800	2.5	139.1	**BF90-../DHE13LA4**	596	27700	96300
7.5	9.5	7500	2.2	154.8	**BF90-../DHE13LA4**	596	30100	100800
7.5	8.2	8700	1.95	178.6	**BF90-../DHE13LA4**	596	33400	106700
7.5	7.4	9600	1.75	198.8	**BF90-../DHE13LA4**	596	36000	111300
7.5	6.3	11300	1.5	232.6	**BF90-../DHE13LA4**	596	39900	118300
7.5	5.7	12500	1.35	259.0	**BF90-../DHE13LA4**	596	42800	120000
7.5	5.5	13000	1.4	269.8	**BF90Z-../DHE13LA4**	657	42800	120000
7.5	4.9	14600	1.25	300.4	**BF90Z-../DHE13LA4**	657	42800	120000
7.5	4.3	16600	1.1	343.6	**BF90Z-../DHE13LA4**	657	42800	120000
7.5	3.9	18300	1.0	382.6	**BF90Z-../DHE13LA4**	657	42800	120000
7.5	3.2	22300	0.83	456.7	**BF90Z-../DHE13LA4**	657	42800	120000

The torques marked (*) are maximum permissible torques for service factor f_B=1,0.

9.5 kW

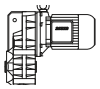

P_N	50 Hz			i	Type	m		
	n_2	M_2	f_B					
[kW]	[1/min]	[Nm]	[—]	[:1]		[kg]	[N]	[N]
9.5	275	325	1.55	5.38	**BF50-../DHE16MB4**	160	4500	-
9.5	191	475	1.2	7.71	**BF50-../DHE16MB4**	160	5100	-
9.5	138	650	1.05	10.68	**BF50-../DHE16MB4**	160	5600	-
9.5	101	890	0.89	14.65	**BF50-../DHE16MB4**	160	6100	-
9.5	89	1010	0.94	16.70	**BF50-../DHE16MB4**	160	6200	-
9.5	79	1140	0.88	18.68	**BF50-../DHE16MB4**	160	6400	-
9.5	285	315	2.4	5.22	**BF60-../DHE16MB4**	193	5200	14800
9.5	190	475	1.85	7.74	**BF60-../DHE16MB4**	193	6000	16900
9.5	143	630	1.6	10.31	**BF60-../DHE16MB4**	193	6500	18400
9.5	104	870	1.35	14.24	**BF60-../DHE16MB4**	193	7100	20000
9.5	87	1040	1.4	16.96	**BF60-../DHE16MB4**	193	7300	20600
9.5	79	1140	1.35	18.81	**BF60-../DHE16MB4**	193	7600	21500
9.5	66	1370	1.2	22.58	**BF60-../DHE16MB4**	193	8000	22600
9.5	59	1530	1.15	25.05	**BF60-../DHE16MB4**	193	8200	23200
9.5	47.5	1910	0.99	31.20	**BF60-../DHE16MB4**	193	8800	24900
9.5	42.5	2100	0.95	34.62	**BF60-../DHE16MB4**	193	9100	25700
9.5	35.5	2550	0.84	41.60	**BF60-../DHE16MB4**	193	9600	27100
9.5	32	2800	0.8	46.16	**BF60-../DHE16MB4**	193	9900	28000
9.5	60	1510	3.3	24.55	**BF70-../DHE16MB4**	276	7000	27700
9.5	54	1680	3.1	27.29	**BF70-../DHE16MB4**	276	7000	28400
9.5	46.5	1950	2.7	31.84	**BF70-../DHE16MB4**	276	7700	30000
9.5	40	2250	2.3	36.88	**BF70-../DHE16MB4**	276	7900	31100
9.5	34.5	2600	2.0	43.02	**BF70-../DHE16MB4**	276	8700	32800
9.5	31	2900	1.8	47.82	**BF70-../DHE16MB4**	276	9100	34000
9.5	26.5	3400	1.55	55.79	**BF70-../DHE16MB4**	276	10200	36000
9.5	24	3750	1.4	61.94	**BF70-../DHE16MB4**	276	10800	37400
9.5	20.5	4400	1.2	72.26	**BF70-../DHE16MB4**	276	12000	39600
9.5	18	5000	1.05	81.82	**BF70-../DHE16MB4**	276	12800	41300
9.5	15.5	5800	0.9	95.46	**BF70-../DHE16MB4**	276	14000	43700
9.5	14	6400	0.81	105.2	**BF70-../DHE16MB4**	276	14700	45100
9.5	31	2900	3.0	47.46	**BF80-../DHE16MB4**	372	13400	53700
9.5	27.5	3250	2.8	53.86	**BF80-../DHE16MB4**	372	14000	55800
9.5	24	3750	2.5	61.55	**BF80-../DHE16MB4**	372	14800	58100
9.5	21.5	4200	2.3	69.86	**BF80-../DHE16MB4**	372	15900	60600
9.5	18	5000	1.9	83.16	**BF80-../DHE16MB4**	372	18400	65100
9.5	16	5600	1.7	94.38	**BF80-../DHE16MB4**	372	20300	68500
9.5	14	6400	1.5	107.9	**BF80-../DHE16MB4**	372	22400	72300
9.5	12.5	7200	1.3	122.4	**BF80-../DHE16MB4**	372	24500	75000
9.5	11	8200	1.15	139.7	**BF80-../DHE16MB4**	372	26700	75000
9.5	9.3	9700	0.98	158.5	**BF80-../DHE16MB4**	372	29000	75000
9.5	8.0	11300	0.84	184.5	**BF80-../DHE16MB4**	372	31800	75000
9.5	16.5	5400	3.1	90.02	**BF90-../DHE16MB4**	620	18900	80600
9.5	14	6400	2.6	107.5	**BF90-../DHE16MB4**	620	22300	86900
9.5	12.5	7200	2.3	119.7	**BF90-../DHE16MB4**	620	24500	90800
9.5	11	8200	2.0	139.1	**BF90-../DHE16MB4**	620	27700	96300
9.5	9.5	9500	1.75	154.8	**BF90-../DHE16MB4**	620	30100	100800
9.5	8.3	10900	1.55	178.6	**BF90-../DHE16MB4**	620	33400	106700
9.5	7.4	12200	1.4	198.8	**BF90-../DHE16MB4**	620	36000	111300
9.5	6.4	14100	1.2	232.6	**BF90-../DHE16MB4**	620	39900	118300
9.5	5.7	15900	1.05	259.0	**BF90-../DHE16MB4**	620	42800	120000
9.5	5.5	16400	1.15	269.8	**BF90Z-../DHE16MB4**	681	42800	120000
9.5	4.9	18500	1.0	300.4	**BF90Z-../DHE16MB4**	681	42800	120000
9.5	4.3	21000	0.88	343.6	**BF90Z-../DHE16MB4**	681	42800	120000
9.5	3.9	23200	0.8	382.6	**BF90Z-../DHE16MB4**	681	42800	120000

The torques marked (*) are maximum permissible torques for service factor f_B=1,0.

11 kW

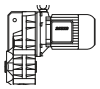

P_N	50 Hz			i	**Type**	m		
	n_2	M_2	f_B					
[kW]	[1/min]	[Nm]	[—]	[:1]		[kg]	[N]	[N]
11	275	380	1.3	5.38	**BF50-../DHE16LB4**	173	4500	-
11	191	550	1.05	7.71	**BF50-../DHE16LB4**	173	5100	-
11	138	760	0.89	10.68	**BF50-../DHE16LB4**	173	5600	-
11	89	1180	0.81	16.70	**BF50-../DHE16LB4**	173	6200	-
11	285	365	2.1	5.22	**BF60-../DHE16LB4**	206	5200	14800
11	190	550	1.6	7.74	**BF60-../DHE16LB4**	206	6000	16900
11	143	730	1.4	10.31	**BF60-../DHE16LB4**	206	6500	18400
11	104	1010	1.2	14.24	**BF60-../DHE16LB4**	206	7100	20000
11	87	1200	1.2	16.96	**BF60-../DHE16LB4**	206	7300	20600
11	79	1320	1.15	18.81	**BF60-../DHE16LB4**	206	7600	21500
11	66	1590	1.05	22.58	**BF60-../DHE16LB4**	206	8000	22600
11	59	1780	0.97	25.05	**BF60-../DHE16LB4**	206	8200	23200
11	47.5	2200	0.86	31.20	**BF60-../DHE16LB4**	206	8800	24900
11	42.5	2450	0.81	34.62	**BF60-../DHE16LB4**	206	9100	25700
11	70	1500	3.1	21.04	**BF70-../DHE16LB4**	289	6400	26300
11	60	1750	2.9	24.55	**BF70-../DHE16LB4**	289	7000	27700
11	54	1940	2.7	27.29	**BF70-../DHE16LB4**	289	7000	28400
11	46.5	2250	2.3	31.84	**BF70-../DHE16LB4**	289	7700	30000
11	40	2600	2.0	36.88	**BF70-../DHE16LB4**	289	7900	31100
11	34.5	3000	1.75	43.02	**BF70-../DHE16LB4**	289	8700	32800
11	31	3350	1.55	47.82	**BF70-../DHE16LB4**	289	9100	34000
11	26.5	3950	1.3	55.79	**BF70-../DHE16LB4**	289	10200	36000
11	24	4350	1.2	61.94	**BF70-../DHE16LB4**	289	10800	37400
11	20.5	5100	1.0	72.26	**BF70-../DHE16LB4**	289	12000	39600
11	18	5800	0.9	81.82	**BF70-../DHE16LB4**	289	12800	41300
11	44	2350	3.3	33.61	**BF80-../DHE16LB4**	385	11700	48400
11	39	2650	3.0	38.14	**BF80-../DHE16LB4**	385	12200	50300
11	31	3350	2.6	47.46	**BF80-../DHE16LB4**	385	13400	53700
11	27.5	3800	2.4	53.86	**BF80-../DHE16LB4**	385	14000	55800
11	24	4350	2.1	61.55	**BF80-../DHE16LB4**	385	14800	58100
11	21.5	4850	1.95	69.86	**BF80-../DHE16LB4**	385	15900	60600
11	18	5800	1.65	83.16	**BF80-../DHE16LB4**	385	18400	65100
11	16	6500	1.45	94.38	**BF80-../DHE16LB4**	385	20300	68500
11	14	7500	1.25	107.9	**BF80-../DHE16LB4**	385	22400	72300
11	12.5	8400	1.15	122.4	**BF80-../DHE16LB4**	385	24500	75000
11	11	9500	1.0	139.7	**BF80-../DHE16LB4**	385	26700	75000
11	9.3	11200	0.85	158.5	**BF80-../DHE16LB4**	385	29000	75000
11	21	5000	3.2	70.69	**BF90-../DHE16LB4**	632	16800	74700
11	18.5	5600	3.0	80.85	**BF90-../DHE16LB4**	632	17500	77500
11	16.5	6300	2.7	90.02	**BF90-../DHE16LB4**	632	18900	80600
11	14	7500	2.2	107.5	**BF90-../DHE16LB4**	632	22300	86900
11	12.5	8400	2.0	119.7	**BF90-../DHE16LB4**	632	24500	90800
11	11	9500	1.75	139.1	**BF90-../DHE16LB4**	632	27700	96300
11	9.5	11000	1.55	154.8	**BF90-../DHE16LB4**	632	30100	100800
11	8.3	12600	1.35	178.6	**BF90-../DHE16LB4**	632	33400	106700
11	7.4	14100	1.2	198.8	**BF90-../DHE16LB4**	632	36000	111300
11	6.4	16400	1.0	232.6	**BF90-../DHE16LB4**	632	39900	118300
11	5.7	18400	0.91	259.0	**BF90-../DHE16LB4**	632	42800	120000
11	5.5	19100	0.97	269.8	**BF90Z-../DHE16LB4**	694	42800	120000
11	4.9	21400	0.86	300.4	**BF90Z-../DHE16LB4**	694	42800	120000

15 kW

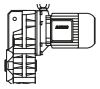

P_N	50 Hz			i	**Type**	m		
	n_2	M_2	f_B					
[kW]	[1/min]	[Nm]	[—]	[:1]		[kg]	[N]	[N]
15	275	520	0.96	5.38	**BF50-../DHE16XB4**	183	4500	-
15	285	500	1.5	5.22	**BF60-../DHE16XB4**	216	5200	14800
15	190	750	1.15	7.74	**BF60-../DHE16XB4**	216	6000	16900
15	143	1000	1.0	10.31	**BF60-../DHE16XB4**	216	6500	18400
15	104	1370	0.87	14.24	**BF60-../DHE16XB4**	216	7100	20000

The torques marked (*) are maximum permissible torques for service factor f_B=1,0.

15 kW

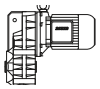

P_N	50 Hz			i	**Type**	m		
	n_2	M_2	f_B					
[kW]	[1/min]	[Nm]	[—]	[:1]		[kg]	[N]	[N]
15	87	1640	0.88	16.96	**BF60-../DHE16XB4**	216	7300	20600
15	79	1810	0.84	18.81	**BF60-../DHE16XB4**	216	7600	21500
15	99	1440	2.5	14.90	**BF70-../DHE16XB4**	299	5900	24000
15	85	1680	2.5	17.39	**BF70-../DHE16XB4**	299	6200	25000
15	70	2000	2.3	21.04	**BF70-../DHE16XB4**	299	6400	26300
15	60	2350	2.1	24.55	**BF70-../DHE16XB4**	299	7000	27700
15	54	2650	1.95	27.29	**BF70-../DHE16XB4**	299	7000	28400
15	46.5	3050	1.7	31.84	**BF70-../DHE16XB4**	299	7700	30000
15	40	3550	1.45	36.88	**BF70-../DHE16XB4**	299	7900	31100
15	34.5	4150	1.25	43.02	**BF70-../DHE16XB4**	299	8700	32800
15	31	4600	1.15	47.82	**BF70-../DHE16XB4**	299	9100	34000
15	26.5	5400	0.96	55.79	**BF70-../DHE16XB4**	299	10200	36000
15	24	5900	0.88	61.94	**BF70-../DHE16XB4**	299	10800	37400
15	90	1590	3.3	16.49	**BF80-../DHE16XB4**	395	11400	41400
15	64	2200	2.9	23.29	**BF80-../DHE16XB4**	395	11800	44900
15	49	2900	2.5	30.21	**BF80-../DHE16XB4**	395	12300	47900
15	44	3250	2.4	33.61	**BF80-../DHE16XB4**	395	11700	48400
15	39	3650	2.2	38.14	**BF80-../DHE16XB4**	395	12200	50300
15	31	4600	1.85	47.46	**BF80-../DHE16XB4**	395	13400	53700
15	27.5	5200	1.7	53.86	**BF80-../DHE16XB4**	395	14000	55800
15	24	5900	1.6	61.55	**BF80-../DHE16XB4**	395	14800	58100
15	21.5	6600	1.45	69.86	**BF80-../DHE16XB4**	395	15900	60600
15	18	7900	1.2	83.16	**BF80-../DHE16XB4**	395	18400	65100
15	16	8900	1.05	94.38	**BF80-../DHE16XB4**	395	20300	68500
15	14	10200	0.93	107.9	**BF80-../DHE16XB4**	395	22400	72300
15	12.5	11400	0.83	122.4	**BF80-../DHE16XB4**	395	24500	75000
15	32	4450	3.2	46.43	**BF90-../DHE16XB4**	642	13800	65500
15	28.5	5000	2.9	51.70	**BF90-../DHE16XB4**	642	14600	67800
15	23.5	6000	2.6	63.49	**BF90-../DHE16XB4**	642	15800	72000
15	21	6800	2.3	70.69	**BF90-../DHE16XB4**	642	16800	74700
15	18.5	7700	2.1	80.85	**BF90-../DHE16XB4**	642	17500	77500
15	16.5	8600	1.95	90.02	**BF90-../DHE16XB4**	642	18900	80600
15	14	10200	1.65	107.5	**BF90-../DHE16XB4**	642	22300	86900
15	12.5	11400	1.45	119.7	**BF90-../DHE16XB4**	642	24500	90800
15	11	13000	1.3	139.1	**BF90-../DHE16XB4**	642	27700	96300
15	9.5	15000	1.1	154.8	**BF90-../DHE16XB4**	642	30100	100800
15	8.3	17200	0.98	178.6	**BF90-../DHE16XB4**	642	33400	106700
15	7.4	19300	0.87	198.8	**BF90-../DHE16XB4**	642	36000	111300

18.5 kW

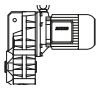

P_N	50 Hz			i	**Type**	m		
	n_2	M_2	f_B					
[kW]	[1/min]	[Nm]	[—]	[:1]		[kg]	[N]	[N]
18.5	285	610	1.25	5.22	**BF60-../DHE18LB4**	263	5200	14800
18.5	190	920	0.94	7.74	**BF60-../DHE18LB4**	263	6000	16900
18.5	143	1230	0.82	10.31	**BF60-../DHE18LB4**	263	6500	18400
18.5	143	1230	2.0	10.32	**BF70-../DHE18LB4**	340	4600	18700
18.5	123	1430	2.1	12.04	**BF70-../DHE18LB4**	340	4900	19700
18.5	99	1780	2.1	14.90	**BF70-../DHE18LB4**	340	5900	24000
18.5	85	2050	2.1	17.39	**BF70-../DHE18LB4**	340	6200	25000
18.5	70	2500	1.85	21.04	**BF70-../DHE18LB4**	340	6400	26300
18.5	60	2900	1.75	24.55	**BF70-../DHE18LB4**	340	7000	27700
18.5	54	3250	1.6	27.29	**BF70-../DHE18LB4**	340	7000	28400
18.5	46.5	3750	1.4	31.84	**BF70-../DHE18LB4**	340	7700	30000
18.5	40	4400	1.2	36.88	**BF70-../DHE18LB4**	340	7900	31100
18.5	34.5	5100	1.0	43.02	**BF70-../DHE18LB4**	340	8700	32800
18.5	31	5600	0.93	47.82	**BF70-../DHE18LB4**	340	9100	34000
18.5	129	1360	2.7	11.42	**BF80-../DHE18LB4**	436	8900	32200
18.5	90	1960	2.7	16.49	**BF80-../DHE18LB4**	436	11400	41400
18.5	64	2750	2.3	23.29	**BF80-../DHE18LB4**	436	11800	44900

The torques marked (*) are maximum permissible torques for service factor f_B=1,0.

18.5 kW

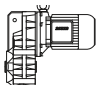

P_N	50 Hz			i	**Type**	m		
	n_2	M_2	f_B					
[kW]	[1/min]	[Nm]	[—]	[:1]		[kg]	[N]	[N]
18.5	49	3600	2.0	30.21	**BF80-../DHE18LB4**	436	12300	47900
18.5	44	4000	1.95	33.61	**BF80-../DHE18LB4**	436	11700	48400
18.5	39	4500	1.8	38.14	**BF80-../DHE18LB4**	436	12200	50300
18.5	31	5600	1.55	47.46	**BF80-../DHE18LB4**	436	13400	53700
18.5	27.5	6400	1.4	53.86	**BF80-../DHE18LB4**	436	14000	55800
18.5	24	7300	1.25	61.55	**BF80-../DHE18LB4**	436	14800	58100
18.5	21.5	8200	1.15	69.86	**BF80-../DHE18LB4**	436	15900	60600
18.5	18	9800	0.97	83.16	**BF80-../DHE18LB4**	436	18400	65100
18.5	16	11000	0.86	94.38	**BF80-../DHE18LB4**	436	20300	68500
18.5	44	4000	3.2	33.71	**BF90-../DHE18LB4**	688	11900	59300
18.5	39.5	4450	3.0	37.54	**BF90-../DHE18LB4**	688	12700	61500
18.5	32	5500	2.6	46.43	**BF90-../DHE18LB4**	688	13800	65500
18.5	28.5	6100	2.4	51.70	**BF90-../DHE18LB4**	688	14600	67800
18.5	23.5	7500	2.1	63.49	**BF90-../DHE18LB4**	688	15800	72000
18.5	21	8400	1.9	70.69	**BF90-../DHE18LB4**	688	16800	74700
18.5	18.5	9500	1.75	80.85	**BF90-../DHE18LB4**	688	17500	77500
18.5	16.5	10700	1.55	90.02	**BF90-../DHE18LB4**	688	18900	80600
18.5	14	12600	1.35	107.5	**BF90-../DHE18LB4**	688	22300	86900
18.5	12.5	14100	1.2	119.7	**BF90-../DHE18LB4**	688	24500	90800
18.5	11	16000	1.05	139.1	**BF90-../DHE18LB4**	688	27700	96300
18.5	9.5	18500	0.91	154.8	**BF90-../DHE18LB4**	688	30100	100800

22 kW

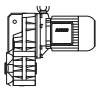

P_N	50 Hz			i	**Type**	m		
	n_2	M_2	f_B					
[kW]	[1/min]	[Nm]	[—]	[:1]		[kg]	[N]	[N]
22	143	1460	1.7	10.32	**BF70-../DHE18XB4**	358	4600	18700
22	123	1700	1.75	12.04	**BF70-../DHE18XB4**	358	4900	19700
22	99	2100	1.75	14.90	**BF70-../DHE18XB4**	358	5900	24000
22	85	2450	1.75	17.39	**BF70-../DHE18XB4**	358	6200	25000
22	70	3000	1.55	21.04	**BF70-../DHE18XB4**	358	6400	26300
22	60	3500	1.45	24.55	**BF70-../DHE18XB4**	358	7000	27700
22	54	3850	1.35	27.29	**BF70-../DHE18XB4**	358	7000	28400
22	46.5	4500	1.15	31.84	**BF70-../DHE18XB4**	358	7700	30000
22	40	5200	1.0	36.88	**BF70-../DHE18XB4**	358	7900	31100
22	34.5	6000	0.87	43.02	**BF70-../DHE18XB4**	358	8700	32800
22	129	1620	2.3	11.42	**BF80-../DHE18XB4**	454	8900	32200
22	90	2300	2.3	16.49	**BF80-../DHE18XB4**	454	11400	41400
22	64	3250	1.95	23.29	**BF80-../DHE18XB4**	454	11800	44900
22	49	4250	1.65	30.21	**BF80-../DHE18XB4**	454	12300	47900
22	44	4750	1.65	33.61	**BF80-../DHE18XB4**	454	11700	48400
22	39	5300	1.5	38.14	**BF80-../DHE18XB4**	454	12200	50300
22	31	6700	1.3	47.46	**BF80-../DHE18XB4**	454	13400	53700
22	27.5	7600	1.2	53.86	**BF80-../DHE18XB4**	454	14000	55800
22	24	8700	1.05	61.55	**BF80-../DHE18XB4**	454	14800	58100
22	21.5	9700	0.98	69.86	**BF80-../DHE18XB4**	454	15900	60600
22	18	11600	0.82	83.16	**BF80-../DHE18XB4**	454	18400	65100
22	44	4750	2.7	33.71	**BF90-../DHE18XB4**	706	11900	59300
22	39.5	5300	2.5	37.54	**BF90-../DHE18XB4**	706	12700	61500
22	32	6500	2.2	46.43	**BF90-../DHE18XB4**	706	13800	65500
22	28.5	7300	2.0	51.70	**BF90-../DHE18XB4**	706	14600	67800
22	23.5	8900	1.75	63.49	**BF90-../DHE18XB4**	706	15800	72000
22	21	10000	1.6	70.69	**BF90-../DHE18XB4**	706	16800	74700
22	18.5	11300	1.45	80.85	**BF90-../DHE18XB4**	706	17500	77500
22	16.5	12700	1.3	90.02	**BF90-../DHE18XB4**	706	18900	80600
22	14	15000	1.1	107.5	**BF90-../DHE18XB4**	706	22300	86900
22	12.5	16800	1.0	119.7	**BF90-../DHE18XB4**	706	24500	90800
22	11	19100	0.88	139.1	**BF90-../DHE18XB4**	706	27700	96300

The torques marked (*) are maximum permissible torques for service factor f_B=1,0.

0.03 kW

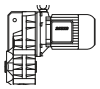

P_N	50 Hz			i	Type	m		
	n_2	M_2	f_B					
[kW]	[1/min]	[Nm]	[—]	[:1]		[kg]	[N]	[N]
0.03	9.0	31.5	7.6	151.2	**BF10Z-../D04LA4**	21	6400	-
0.03	8.2	34.5	7.0	166.2	**BF10Z-../D04LA4**	21	6400	-
0.03	7.5	38	6.3	180.1	**BF10Z-../D04LA4**	21	6400	-
0.03	6.9	41.5	5.8	198.0	**BF10Z-../D04LA4**	21	6400	-
0.03	6.3	45	5.3	214.5	**BF10Z-../D04LA4**	21	6400	-
0.03	5.8	49	4.9	235.8	**BF10Z-../D04LA4**	21	6400	-
0.03	5.3	54	4.4	257.4	**BF10Z-../D04LA4**	21	6400	-
0.03	4.8	59	4.1	283.1	**BF10Z-../D04LA4**	21	6400	-
0.03	4.2	68	3.5	324.3	**BF10Z-../D04LA4**	21	6400	-
0.03	3.8	75	3.2	356.6	**BF10Z-../D04LA4**	21	6400	-
0.03	3.6	79	3.0	380.2	**BF10Z-../D04LA4**	21	6400	-
0.03	3.3	86	2.8	418.0	**BF10Z-../D04LA4**	21	6400	-
0.03	2.9	98	2.4	469.5	**BF10Z-../D04LA4**	21	6400	-
0.03	2.6	110	2.2	539.1	**BF10Z-../D04LA4**	21	6400	-
0.03	2.3	124	1.95	592.8	**BF10Z-../D04LA4**	21	6400	-
0.03	1.8	97	2.7	768.2	**BF10G06-../D04LA4**	25	6400	-
0.03	1.6	110	2.4	845.1	**BF10G06-../D04LA4**	25	6400	-
0.03	1.4	130	2.0	994.0	**BF10G06-../D04LA4**	25	6400	-
0.03	1.2	159	1.65	1190	**BF10G06-../D04LA4**	25	6400	-
0.03	0.95	210	1.25	1452	**BF10G06-../D04LA4**	25	6400	-
0.03	0.8	260*	1.0	1744	**BF10G06-../D04LA4**	25	6400	-
0.03	0.65	260*	1.0	2096	**BF10G06-../D04LA4**	25	6400	-
0.03	0.55	260*	1.0	2467	**BF10G06-../D04LA4**	25	6400	-
0.03	0.46	260*	1.0	2952	**BF10G06-../D04LA4**	25	6400	-
0.03	0.42	260*	1.0	3220	**BF10G06-../D04LA4**	25	6400	-
0.03	0.35	260*	1.0	3942	**BF10G06-../D04LA4**	25	6400	-
0.03	0.3	260*	1.0	4569	**BF10G06-../D04LA4**	25	6400	-
0.03	0.24	260*	1.0	5709	**BF10G06-../D04LA4**	25	6400	-
0.03	0.21	260*	1.0	6550	**BF10G06-../D04LA4**	25	6400	-
0.03	0.19	260*	1.0	7144	**BF10G06-../D04LA4**	25	6400	-
0.03	0.16	260*	1.0	8681	**BF10G06-../D04LA4**	25	6400	-
0.03	0.15	260*	1.0	9471	**BF10G06-../D04LA4**	25	6400	-
0.03	1.2	162	2.8	1140	**BF20G06-../D04LA4**	31	7900	-
0.03	1.0	200	2.3	1392	**BF20G06-../D04LA4**	31	7900	-
0.03	0.9	230	2.0	1533	**BF20G06-../D04LA4**	31	7900	-
0.03	0.8	265	1.75	1764	**BF20G06-../D04LA4**	31	7900	-
0.03	0.65	345	1.35	2192	**BF20G06-../D04LA4**	31	7900	-
0.03	0.55	410	1.1	2579	**BF20G06-../D04LA4**	31	7900	-
0.03	0.48	460*	1.0	2829	**BF20G06-../D04LA4**	31	7900	-
0.03	0.44	460*	1.0	3086	**BF20G06-../D04LA4**	31	7900	-
0.03	0.36	460*	1.0	3778	**BF20G06-../D04LA4**	31	7900	-
0.03	0.31	460*	1.0	4379	**BF20G06-../D04LA4**	31	7900	-
0.03	0.25	460*	1.0	5471	**BF20G06-../D04LA4**	31	7900	-
0.03	0.2	460*	1.0	6847	**BF20G06-../D04LA4**	31	7900	-
0.03	0.17	460*	1.0	8320	**BF20G06-../D04LA4**	31	7900	-
0.03	0.15	460*	1.0	9077	**BF20G06-../D04LA4**	31	7900	-
0.03	1.0	200	3.2	1404	**BF30G06-../D04LA4**	41	7400	-
0.03	0.85	245	2.6	1686	**BF30G06-../D04LA4**	41	7400	-
0.03	0.7	315	2.0	2026	**BF30G06-../D04LA4**	41	7400	-
0.03	0.6	370	1.7	2386	**BF30G06-../D04LA4**	41	7400	-
0.03	0.48	485	1.3	2854	**BF30G06-../D04LA4**	41	7400	-
0.03	0.39	610	1.05	3493	**BF30G06-../D04LA4**	41	7400	-
0.03	0.36	630*	1.0	3811	**BF30G06-../D04LA4**	41	7400	-
0.03	0.31	630*	1.0	4417	**BF30G06-../D04LA4**	41	7400	-
0.03	0.27	630*	1.0	5060	**BF30G06-../D04LA4**	41	7400	-
0.03	0.22	630*	1.0	6333	**BF30G06-../D04LA4**	41	7400	-
0.03	0.19	630*	1.0	7206	**BF30G06-../D04LA4**	41	7400	-
0.03	0.18	630*	1.0	7861	**BF30G06-../D04LA4**	41	7400	-
0.03	0.15	630*	1.0	9157	**BF30G06-../D04LA4**	41	7400	-

The torques marked (*) are maximum permissible torques for service factor f_B=1,0.

0.04 kW

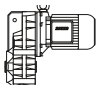

P_N	50 Hz			i	Type	m		
	n_2	M_2	f_B					
[kW]	[1/min]	[Nm]	[—]	[:1]		[kg]	[N]	[N]
0.04	9.0	42	5.7	151.2	**BF10Z-../D04LA4**	21	6400	-
0.04	8.2	46.5	5.2	166.2	**BF10Z-../D04LA4**	21	6400	-
0.04	7.5	50	4.8	180.1	**BF10Z-../D04LA4**	21	6400	-
0.04	6.9	55	4.4	198.0	**BF10Z-../D04LA4**	21	6400	-
0.04	6.3	60	4.0	214.5	**BF10Z-../D04LA4**	21	6400	-
0.04	5.8	65	3.7	235.8	**BF10Z-../D04LA4**	21	6400	-
0.04	5.3	72	3.3	257.4	**BF10Z-../D04LA4**	21	6400	-
0.04	4.8	79	3.0	283.1	**BF10Z-../D04LA4**	21	6400	-
0.04	4.2	90	2.7	324.3	**BF10Z-../D04LA4**	21	6400	-
0.04	3.8	100	2.4	356.6	**BF10Z-../D04LA4**	21	6400	-
0.04	3.6	106	2.3	380.2	**BF10Z-../D04LA4**	21	6400	-
0.04	3.3	115	2.1	418.0	**BF10Z-../D04LA4**	21	6400	-
0.04	2.9	131	1.85	469.5	**BF10Z-../D04LA4**	21	6400	-
0.04	2.6	146	1.65	539.1	**BF10Z-../D04LA4**	21	6400	-
0.04	2.3	166	1.45	592.8	**BF10Z-../D04LA4**	21	6400	-
0.04	2.1	119	2.2	643.8	**BF10G06-../D04LA4**	25	6400	-
0.04	1.8	150	1.75	768.2	**BF10G06-../D04LA4**	25	6400	-
0.04	1.6	170	1.55	845.1	**BF10G06-../D04LA4**	25	6400	-
0.04	1.4	199	1.3	994.0	**BF10G06-../D04LA4**	25	6400	-
0.04	1.2	235	1.1	1190	**BF10G06-../D04LA4**	25	6400	-
0.04	3.0	127	3.3	460.0	**BF20Z-../D04LA4**	28	7900	-
0.04	1.9	141	3.3	736.1	**BF20G06-../D04LA4**	31	7900	-
0.04	1.7	159	2.9	810.0	**BF20G06-../D04LA4**	31	7900	-
0.04	1.5	183	2.5	952.7	**BF20G06-../D04LA4**	31	7900	-
0.04	1.2	240	1.9	1140	**BF20G06-../D04LA4**	31	7900	-
0.04	1.0	295	1.55	1392	**BF20G06-../D04LA4**	31	7900	-
0.04	0.9	335	1.35	1533	**BF20G06-../D04LA4**	31	7900	-
0.04	0.8	385	1.2	1764	**BF20G06-../D04LA4**	31	7900	-
0.04	1.2	240	2.6	1150	**BF30G06-../D04LA4**	41	7400	-
0.04	1.1	265	2.4	1286	**BF30G06-../D04LA4**	41	7400	-
0.04	1.0	295	2.1	1404	**BF30G06-../D04LA4**	41	7400	-
0.04	0.85	355	1.75	1686	**BF30G06-../D04LA4**	41	7400	-
0.04	0.7	450	1.4	2026	**BF30G06-../D04LA4**	41	7400	-
0.04	0.6	530	1.2	2386	**BF30G06-../D04LA4**	41	7400	-

0.06 kW

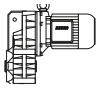

P_N	50 Hz			i	Type	m		
	n_2	M_2	f_B					
[kW]	[1/min]	[Nm]	[—]	[:1]		[kg]	[N]	[N]
0.06	24	23.5	10	56.39	**BF10-../D06LA4**	23	4550	-
0.06	22	26	9.2	61.55	**BF10-../D06LA4**	23	4700	-
0.06	20	28.5	8.4	67.69	**BF10-../D06LA4**	23	4900	-
0.06	17.5	32.5	7.4	77.55	**BF10-../D06LA4**	23	5100	-
0.06	16	35.5	6.8	85.27	**BF10-../D06LA4**	23	5300	-
0.06	15	38	6.3	90.91	**BF10-../D06LA4**	23	5400	-
0.06	14	40.5	5.9	99.97	**BF10-../D06LA4**	23	5600	-
0.06	12.5	45.5	5.3	112.3	**BF10-../D06LA4**	23	5900	-
0.06	11	52	4.6	123.5	**BF10-../D06LA4**	23	6100	-
0.06	10.5	54	4.4	128.9	**BF10-../D06LA4**	23	6200	-
0.06	9.6	59	4.1	141.8	**BF10-../D06LA4**	23	6400	-
0.06	7.5	76	3.2	180.1	**BF10Z-../D06LA4**	24	6400	-
0.06	6.9	83	2.9	198.0	**BF10Z-../D06LA4**	24	6400	-
0.06	6.3	90	2.7	214.5	**BF10Z-../D06LA4**	24	6400	-
0.06	5.8	98	2.4	235.8	**BF10Z-../D06LA4**	24	6400	-
0.06	5.3	108	2.2	257.4	**BF10Z-../D06LA4**	24	6400	-
0.06	4.8	119	2.0	283.1	**BF10Z-../D06LA4**	24	6400	-
0.06	4.2	136	1.75	324.3	**BF10Z-../D06LA4**	24	6400	-
0.06	3.8	150	1.6	356.6	**BF10Z-../D06LA4**	24	6400	-
0.06	3.6	159	1.5	380.2	**BF10Z-../D06LA4**	24	6400	-
0.06	3.3	173	1.4	418.0	**BF10Z-../D06LA4**	24	6400	-
0.06	2.9	197	1.2	469.5	**BF10Z-../D06LA4**	24	6400	-
0.06	2.6	220	1.1	539.1	**BF10Z-../D06LA4**	24	6400	-
0.06	2.3	245	0.98	592.8	**BF10Z-../D06LA4**	24	6400	-

The torques marked (*) are maximum permissible torques for service factor f_B=1,0.

0.06 kW

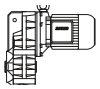

P_N	50 Hz			i	Type	m		
	n_2	M_2	f_B					
[kW]	[1/min]	[Nm]	[—]	[:1]		[kg]	[N]	[N]
0.06	2.1	210	1.25	643.8	**BF10G06-../D06LA4**	28	6400	-
0.06	1.8	255	1.0	768.2	**BF10G06-../D06LA4**	28	6400	-
0.06	1.6	290	0.9	845.1	**BF10G06-../D06LA4**	28	6400	-
0.06	4.2	136	3.1	325.2	**BF20Z-../D06LA4**	31	7900	-
0.06	4.0	143	2.9	339.1	**BF20Z-../D06LA4**	31	7900	-
0.06	3.7	154	2.7	373.1	**BF20Z-../D06LA4**	31	7900	-
0.06	3.3	173	2.4	418.1	**BF20Z-../D06LA4**	31	7900	-
0.06	3.0	191	2.2	460.0	**BF20Z-../D06LA4**	31	7900	-
0.06	2.7	157	2.9	513.7	**BF20G06-../D06LA4**	34	7900	-
0.06	2.2	200	2.3	617.0	**BF20G06-../D06LA4**	34	7900	-
0.06	1.9	240	1.9	736.1	**BF20G06-../D06LA4**	34	7900	-
0.06	1.7	270	1.7	810.0	**BF20G06-../D06LA4**	34	7900	-
0.06	1.5	310	1.5	952.7	**BF20G06-../D06LA4**	34	7900	-
0.06	1.2	400	1.15	1140	**BF20G06-../D06LA4**	34	7900	-
0.06	1.0	485	0.95	1392	**BF20G06-../D06LA4**	34	7900	-
0.06	3.3	173	3.3	412.6	**BF30Z-../D06LA4**	42	7400	-
0.06	3.0	191	3.0	463.3	**BF30Z-../D06LA4**	42	7400	-
0.06	2.6	220	2.6	537.0	**BF30Z-../D06LA4**	42	7400	-
0.06	2.3	245	2.3	590.7	**BF30Z-../D06LA4**	42	7400	-
0.06	2.2	200	3.2	622.4	**BF30G06-../D06LA4**	45	7400	-
0.06	2.0	225	2.8	705.1	**BF30G06-../D06LA4**	45	7400	-
0.06	1.7	270	2.3	817.1	**BF30G06-../D06LA4**	45	7400	-
0.06	1.5	310	2.0	961.1	**BF30G06-../D06LA4**	45	7400	-
0.06	1.2	400	1.6	1150	**BF30G06-../D06LA4**	45	7400	-
0.06	1.1	435	1.45	1286	**BF30G06-../D06LA4**	45	7400	-
0.06	1.0	485	1.3	1404	**BF30G06-../D06LA4**	45	7400	-
0.06	0.85	580	1.1	1686	**BF30G06-../D06LA4**	45	7400	-
0.06	0.95	340	2.9	1484	**BF40G10-../D06LA4**	58	10600	-
0.06	0.75	460	2.2	1810	**BF40G10-../D06LA4**	58	10600	-
0.06	0.7	500	2.0	1997	**BF40G10-../D06LA4**	58	10600	-
0.06	0.55	710	1.4	2536	**BF40G10-../D06LA4**	58	10600	-
0.06	0.49	840	1.2	2810	**BF40G10-../D06LA4**	58	10600	-
0.06	0.7	520	2.7	2059	**BF50G10-../D06LA4**	86	13600	-
0.06	0.6	640	2.2	2360	**BF50G10-../D06LA4**	86	13600	-
0.06	0.49	860	1.65	2810	**BF50G10-../D06LA4**	86	13600	-
0.06	0.41	1090	1.3	3348	**BF50G10-../D06LA4**	86	13600	-
0.06	0.34	1370	1.0	4019	**BF50G10-../D06LA4**	86	13600	-
0.06	0.42	860	2.9	3237	**BF60G20-../D06LA4**	134	15300	43300
0.06	0.35	1130	2.2	3883	**BF60G20-../D06LA4**	134	15300	43300
0.06	0.3	1400	1.8	4646	**BF60G20-../D06LA4**	134	15300	43300
0.06	0.26	1700	1.45	5241	**BF60G20-../D06LA4**	134	15300	43300
0.06	0.23	1980	1.25	6014	**BF60G20-../D06LA4**	134	15300	43300
0.06	0.21	2200	1.15	6679	**BF60G20-../D06LA4**	134	15300	43300
0.06	0.24	1890	3.0	5691	**BF70G20-../D06LA4**	212	16100	47700
0.06	0.21	2200	2.6	6530	**BF70G20-../D06LA4**	212	16100	47700
0.06	0.19	2500	2.3	7248	**BF70G20-../D06LA4**	212	16100	47700
0.06	0.17	2850	2.0	8052	**BF70G20-../D06LA4**	212	16100	47700

0.09 kW

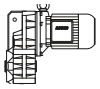

P_N	50 Hz			i	Type	m		
	n_2	M_2	f_B					
[kW]	[1/min]	[Nm]	[—]	[:1]		[kg]	[N]	[N]
0.09	34	25	9.6	39.75	**BF10-../D06LA4**	23	3950	-
0.09	31.5	27	8.9	43.06	**BF10-../D06LA4**	23	4100	-
0.09	29	29.5	8.1	47.35	**BF10-../D06LA4**	23	4250	-
0.09	26.5	32	7.5	51.28	**BF10-../D06LA4**	23	4400	-
0.09	24	35.5	6.8	56.39	**BF10-../D06LA4**	23	4550	-
0.09	22	39	6.2	61.55	**BF10-../D06LA4**	23	4700	-
0.09	20	42.5	5.6	67.69	**BF10-../D06LA4**	23	4900	-

The torques marked (*) are maximum permissible torques for service factor f_B=1,0.

0.09 kW

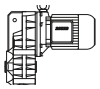

P_N	50 Hz			i	Type	m		
	n_2	M_2	f_B					
[kW]	[1/min]	[Nm]	[—]	[:1]		[kg]	[N]	[N]
0.09	17.5	49	4.9	77.55	**BF10-../D06LA4**	23	5100	-
0.09	16	53	4.5	85.27	**BF10-../D06LA4**	23	5300	-
0.09	15	57	4.2	90.91	**BF10-../D06LA4**	23	5400	-
0.09	14	61	3.9	99.97	**BF10-../D06LA4**	23	5600	-
0.09	12.5	68	3.5	112.3	**BF10-../D06LA4**	23	5900	-
0.09	11	78	3.1	123.5	**BF10-../D06LA4**	23	6100	-
0.09	10.5	81	3.0	128.9	**BF10-../D06LA4**	23	6200	-
0.09	9.6	89	2.7	141.8	**BF10-../D06LA4**	23	6400	-
0.09	9.0	95	2.5	151.2	**BF10Z-../D06LA4**	24	6400	-
0.09	8.2	104	2.3	166.2	**BF10Z-../D06LA4**	24	6400	-
0.09	7.5	114	2.1	180.1	**BF10Z-../D06LA4**	24	6400	-
0.09	6.9	124	1.95	198.0	**BF10Z-../D06LA4**	24	6400	-
0.09	6.3	136	1.75	214.5	**BF10Z-../D06LA4**	24	6400	-
0.09	5.8	148	1.6	235.8	**BF10Z-../D06LA4**	24	6400	-
0.09	5.3	162	1.5	257.4	**BF10Z-../D06LA4**	24	6400	-
0.09	4.8	179	1.35	283.1	**BF10Z-../D06LA4**	24	6400	-
0.09	4.2	200	1.2	324.3	**BF10Z-../D06LA4**	24	6400	-
0.09	3.8	225	1.05	356.6	**BF10Z-../D06LA4**	24	6400	-
0.09	3.6	235	1.0	380.2	**BF10Z-../D06LA4**	24	6400	-
0.09	3.3	260	0.92	418.0	**BF10Z-../D06LA4**	24	6400	-
0.09	2.9	295	0.81	469.5	**BF10Z-../D06LA4**	24	6400	-
0.09	2.6	270	0.96	536.0	**BF10G06-../D06LA4**	28	6400	-
0.09	6.3	136	3.1	216.9	**BF20Z-../D06LA4**	31	7900	-
0.09	5.8	148	2.8	235.9	**BF20Z-../D06LA4**	31	7900	-
0.09	5.3	162	2.6	259.6	**BF20Z-../D06LA4**	31	7900	-
0.09	4.6	186	2.3	295.5	**BF20Z-../D06LA4**	31	7900	-
0.09	4.2	200	2.1	325.2	**BF20Z-../D06LA4**	31	7900	-
0.09	4.0	210	2.0	339.1	**BF20Z-../D06LA4**	31	7900	-
0.09	3.7	230	1.85	373.1	**BF20Z-../D06LA4**	31	7900	-
0.09	3.3	260	1.6	418.1	**BF20Z-../D06LA4**	31	7900	-
0.09	3.0	285	1.45	460.0	**BF20Z-../D06LA4**	31	7900	-
0.09	2.7	260	1.75	513.7	**BF20G06-../D06LA4**	34	7900	-
0.09	2.2	330	1.4	617.0	**BF20G06-../D06LA4**	34	7900	-
0.09	1.9	390	1.2	736.1	**BF20G06-../D06LA4**	34	7900	-
0.09	1.7	440	1.05	810.0	**BF20G06-../D06LA4**	34	7900	-
0.09	1.5	500	0.92	952.7	**BF20G06-../D06LA4**	34	7900	-
0.09	4.7	182	3.2	289.8	**BF30Z-../D06LA4**	42	7400	-
0.09	4.4	195	2.9	310.7	**BF30Z-../D06LA4**	42	7400	-
0.09	4.0	210	2.7	341.8	**BF30Z-../D06LA4**	42	7400	-
0.09	3.6	235	2.4	375.1	**BF30Z-../D06LA4**	42	7400	-
0.09	3.3	260	2.2	412.6	**BF30Z-../D06LA4**	42	7400	-
0.09	3.0	285	2.0	463.3	**BF30Z-../D06LA4**	42	7400	-
0.09	2.6	330	1.75	537.0	**BF30Z-../D06LA4**	42	7400	-
0.09	2.3	370	1.55	590.7	**BF30Z-../D06LA4**	42	7400	-
0.09	2.2	330	1.9	622.4	**BF30G06-../D06LA4**	45	7400	-
0.09	2.0	370	1.7	705.1	**BF30G06-../D06LA4**	45	7400	-
0.09	1.7	435	1.45	817.1	**BF30G06-../D06LA4**	45	7400	-
0.09	1.5	500	1.25	961.1	**BF30G06-../D06LA4**	45	7400	-
0.09	1.2	630	1.0	1150	**BF30G06-../D06LA4**	45	7400	-
0.09	1.1	690	0.91	1286	**BF30G06-../D06LA4**	45	7400	-
0.09	1.0	770	0.82	1404	**BF30G06-../D06LA4**	45	7400	-
0.09	3.0	285	3.2	459.1	**BF40Z-../D06LA4**	53	10600	-
0.09	2.7	315	2.9	514.6	**BF40Z-../D06LA4**	53	10600	-
0.09	2.4	355	2.5	566.1	**BF40Z-../D06LA4**	53	10600	-
0.09	1.5	350	2.9	928.9	**BF40G10-../D06LA4**	58	10600	-
0.09	1.3	420	2.4	1106	**BF40G10-../D06LA4**	58	10600	-
0.09	1.1	540	1.85	1324	**BF40G10-../D06LA4**	58	10600	-
0.09	0.95	640	1.55	1484	**BF40G10-../D06LA4**	58	10600	-
0.09	0.75	840	1.2	1810	**BF40G10-../D06LA4**	58	10600	-
0.09	0.7	910	1.1	1997	**BF40G10-../D06LA4**	58	10600	-
0.09	1.2	500	2.8	1203	**BF50G10-../D06LA4**	86	13600	-
0.09	1.0	620	2.3	1359	**BF50G10-../D06LA4**	86	13600	-
0.09	0.9	680	2.1	1520	**BF50G10-../D06LA4**	86	13600	-
0.09	0.85	730	1.9	1684	**BF50G10-../D06LA4**	86	13600	-
0.09	0.7	920	1.5	2059	**BF50G10-../D06LA4**	86	13600	-
0.09	0.6	1120	1.25	2360	**BF50G10-../D06LA4**	86	13600	-

The torques marked (*) are maximum permissible torques for service factor f_B=1,0.

0.09 kW

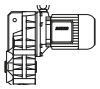

P_N	50 Hz			i	Type	m		
	n_2	M_2	f_B					
[kW]	[1/min]	[Nm]	[—]	[:1]		[kg]	[N]	[N]
0.09	0.7	780	3.2	1955	**BF60G20-../D06LA4**	134	15300	43300
0.09	0.65	860	2.9	2172	**BF60G20-../D06LA4**	134	15300	43300
0.09	0.49	1250	2.0	2781	**BF60G20-../D06LA4**	134	15300	43300
0.09	0.42	1540	1.6	3237	**BF60G20-../D06LA4**	134	15300	43300
0.09	0.35	1950	1.3	3883	**BF60G20-../D06LA4**	134	15300	43300
0.09	0.3	2350	1.05	4646	**BF60G20-../D06LA4**	134	15300	43300
0.09	0.34	2000	2.9	4090	**BF70G20-../D06LA4**	212	16100	47700
0.09	0.3	2350	2.4	4542	**BF70G20-../D06LA4**	212	16100	47700
0.09	0.27	2650	2.2	5124	**BF70G20-../D06LA4**	212	16100	47700
0.09	0.24	3050	1.85	5691	**BF70G20-../D06LA4**	212	16100	47700
0.09	0.21	3600	1.6	6530	**BF70G20-../D06LA4**	212	16100	47700
0.09	0.19	4000	1.45	7248	**BF70G20-../D06LA4**	212	16100	47700
0.09	0.17	4550	1.25	8052	**BF70G20-../D06LA4**	212	16100	47700

0.11 kW

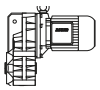

P_N	50 Hz			i	Type	m		
	n_2	M_2	f_B					
[kW]	[1/min]	[Nm]	[—]	[:1]		[kg]	[N]	[N]
0.11	9.0	116	2.1	151.2	**BF10Z-../D04LA4**	21	6400	-
0.11	8.2	128	1.9	166.2	**BF10Z-../D04LA4**	21	6400	-
0.11	7.5	140	1.7	180.1	**BF10Z-../D04LA4**	21	6400	-
0.11	6.9	152	1.6	198.0	**BF10Z-../D04LA4**	21	6400	-
0.11	6.3	166	1.45	214.5	**BF10Z-../D04LA4**	21	6400	-
0.11	5.8	181	1.35	235.8	**BF10Z-../D04LA4**	21	6400	-
0.11	5.3	198	1.2	257.4	**BF10Z-../D04LA4**	21	6400	-
0.11	4.8	215	1.1	283.1	**BF10Z-../D04LA4**	21	6400	-
0.11	4.2	250	0.96	324.3	**BF10Z-../D04LA4**	21	6400	-
0.11	3.8	275	0.87	356.6	**BF10Z-../D04LA4**	21	6400	-
0.11	3.6	290	0.83	380.2	**BF10Z-../D04LA4**	21	6400	-
0.11	3.2	280	0.93	424.5	**BF10G06-../D04LA4**	25	6400	-
0.11	2.6	260*	1.0	536.0	**BF10G06-../D04LA4**	25	6400	-
0.11	2.1	260*	1.0	643.8	**BF10G06-../D04LA4**	25	6400	-
0.11	1.8	260*	1.0	768.2	**BF10G06-../D04LA4**	25	6400	-
0.11	1.6	260*	1.0	845.1	**BF10G06-../D04LA4**	25	6400	-
0.11	1.4	260*	1.0	994.0	**BF10G06-../D04LA4**	25	6400	-
0.11	1.2	260*	1.0	1190	**BF10G06-../D04LA4**	25	6400	-
0.11	0.95	260*	1.0	1452	**BF10G06-../D04LA4**	25	6400	-
0.11	0.8	260*	1.0	1744	**BF10G06-../D04LA4**	25	6400	-
0.11	0.65	260*	1.0	2096	**BF10G06-../D04LA4**	25	6400	-
0.11	0.55	260*	1.0	2467	**BF10G06-../D04LA4**	25	6400	-
0.11	0.46	260*	1.0	2952	**BF10G06-../D04LA4**	25	6400	-
0.11	0.42	260*	1.0	3220	**BF10G06-../D04LA4**	25	6400	-
0.11	0.35	260*	1.0	3942	**BF10G06-../D04LA4**	25	6400	-
0.11	0.3	260*	1.0	4569	**BF10G06-../D04LA4**	25	6400	-
0.11	0.24	260*	1.0	5709	**BF10G06-../D04LA4**	25	6400	-
0.11	0.21	260*	1.0	6550	**BF10G06-../D04LA4**	25	6400	-
0.11	0.19	260*	1.0	7144	**BF10G06-../D04LA4**	25	6400	-
0.11	0.16	260*	1.0	8681	**BF10G06-../D04LA4**	25	6400	-
0.11	0.15	260*	1.0	9471	**BF10G06-../D04LA4**	25	6400	-
0.11	8.3	126	3.3	164.3	**BF20Z-../D04LA4**	28	7900	-
0.11	7.5	140	3.0	180.8	**BF20Z-../D04LA4**	28	7900	-
0.11	6.9	152	2.8	197.1	**BF20Z-../D04LA4**	28	7900	-
0.11	6.3	166	2.5	216.9	**BF20Z-../D04LA4**	28	7900	-
0.11	5.8	181	2.3	235.9	**BF20Z-../D04LA4**	28	7900	-
0.11	5.3	198	2.1	259.6	**BF20Z-../D04LA4**	28	7900	-
0.11	4.6	225	1.85	295.5	**BF20Z-../D04LA4**	28	7900	-
0.11	4.2	250	1.7	325.2	**BF20Z-../D04LA4**	28	7900	-
0.11	4.0	260	1.6	339.1	**BF20Z-../D04LA4**	28	7900	-
0.11	3.7	280	1.5	373.1	**BF20Z-../D04LA4**	28	7900	-
0.11	3.3	315	1.35	418.1	**BF20Z-../D04LA4**	28	7900	-
0.11	3.0	350	1.2	460.0	**BF20Z-../D04LA4**	28	7900	-
0.11	2.7	330	1.4	513.7	**BF20G06-../D04LA4**	31	7900	-
0.11	2.2	415	1.1	617.0	**BF20G06-../D04LA4**	31	7900	-

The torques marked (*) are maximum permissible torques for service factor f_B=1,0.

0.11 kW

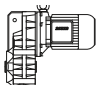

P_N	50 Hz			i	**Type**	m		
	n_2	M_2	f_B					
[kW]	[1/min]	[Nm]	[—]	[:1]		[kg]	[N]	[N]
0.11	1.9	490	0.94	736.1	**BF20G06-../D04LA4**	31	7900	-
0.11	1.7	550	0.84	810.0	**BF20G06-../D04LA4**	31	7900	-
0.11	1.5	460*	1.0	952.7	**BF20G06-../D04LA4**	31	7900	-
0.11	1.2	460*	1.0	1140	**BF20G06-../D04LA4**	31	7900	-
0.11	1.0	460*	1.0	1392	**BF20G06-../D04LA4**	31	7900	-
0.11	0.9	460*	1.0	1533	**BF20G06-../D04LA4**	31	7900	-
0.11	0.8	460*	1.0	1764	**BF20G06-../D04LA4**	31	7900	-
0.11	0.65	460*	1.0	2192	**BF20G06-../D04LA4**	31	7900	-
0.11	0.55	460*	1.0	2579	**BF20G06-../D04LA4**	31	7900	-
0.11	0.48	460*	1.0	2829	**BF20G06-../D04LA4**	31	7900	-
0.11	0.44	460*	1.0	3086	**BF20G06-../D04LA4**	31	7900	-
0.11	0.36	460*	1.0	3778	**BF20G06-../D04LA4**	31	7900	-
0.11	0.31	460*	1.0	4379	**BF20G06-../D04LA4**	31	7900	-
0.11	0.25	460*	1.0	5471	**BF20G06-../D04LA4**	31	7900	-
0.11	0.2	460*	1.0	6847	**BF20G06-../D04LA4**	31	7900	-
0.11	0.17	460*	1.0	8320	**BF20G06-../D04LA4**	31	7900	-
0.11	0.15	460*	1.0	9077	**BF20G06-../D04LA4**	31	7900	-
0.11	2.2	415	1.5	622.4	**BF30G06-../D04LA4**	41	7400	-
0.11	2.0	465	1.35	705.1	**BF30G06-../D04LA4**	41	7400	-
0.11	1.7	550	1.15	817.1	**BF30G06-../D04LA4**	41	7400	-
0.11	1.5	620	1.0	961.1	**BF30G06-../D04LA4**	41	7400	-
0.11	1.2	790	0.8	1150	**BF30G06-../D04LA4**	41	7400	-
0.11	1.1	630*	1.0	1286	**BF30G06-../D04LA4**	41	7400	-
0.11	1.0	630*	1.0	1404	**BF30G06-../D04LA4**	41	7400	-
0.11	0.85	630*	1.0	1686	**BF30G06-../D04LA4**	41	7400	-
0.11	0.7	630*	1.0	2026	**BF30G06-../D04LA4**	41	7400	-
0.11	0.6	630*	1.0	2386	**BF30G06-../D04LA4**	41	7400	-
0.11	0.48	630*	1.0	2854	**BF30G06-../D04LA4**	41	7400	-
0.11	0.39	630*	1.0	3493	**BF30G06-../D04LA4**	41	7400	-
0.11	0.36	630*	1.0	3811	**BF30G06-../D04LA4**	41	7400	-
0.11	0.31	630*	1.0	4417	**BF30G06-../D04LA4**	41	7400	-
0.11	0.27	630*	1.0	5060	**BF30G06-../D04LA4**	41	7400	-
0.11	0.22	630*	1.0	6333	**BF30G06-../D04LA4**	41	7400	-
0.11	0.19	630*	1.0	7206	**BF30G06-../D04LA4**	41	7400	-
0.11	0.18	630*	1.0	7861	**BF30G06-../D04LA4**	41	7400	-
0.11	0.15	630*	1.0	9157	**BF30G06-../D04LA4**	41	7400	-

0.12 kW

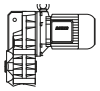

P_N	50 Hz			i	**Type**	m		
	n_2	M_2	f_B					
[kW]	[1/min]	[Nm]	[—]	[:1]		[kg]	[N]	[N]
0.12	153	7.4	9.5	9.21	**BF06-../DPE05LA4**	10	1900	-
0.12	117	9.7	7.7	12.07	**BF06-../DPE05LA4**	10	2000	-
0.12	99	11.5	7.4	14.21	**BF06-../DPE05LA4**	10	2100	-
0.12	83	13.8	6.9	16.99	**BF06-../DPE05LA4**	10	2500	-
0.12	69	16.6	5.7	20.42	**BF06-../DPE05LA4**	10	2700	-
0.12	53	21.5	4.4	26.76	**BF06-../DPE05LA4**	10	3000	-
0.12	45	25	3.8	31.50	**BF06-../DPE05LA4**	10	3200	-
0.12	37.5	30.5	3.1	37.69	**BF06-../DPE05LA4**	10	3500	-
0.12	30.5	37.5	2.5	46.14	**BF06-../DPE05LA4**	10	3800	-
0.12	24.5	46.5	2.0	58.33	**BF06-../DPE05LA4**	10	4000	-
0.12	21.5	53	1.8	66.82	**BF06-../DPE05LA4**	10	4000	-
0.12	17	67	1.4	83.61	**BF06-../DPE05LA4**	10	4000	-
0.12	15	76	1.25	95.16	**BF06-../DPE05LA4**	10	4000	-
0.12	13	88	0.92	110.8	**BF06-../DPE05LA4**	10	4000	-
0.12	15.5	73	3.3	90.91	**BF10-../DPE06LA4**	23	5400	-
0.12	14.5	79	3.0	99.97	**BF10-../DPE06LA4**	23	5600	-
0.12	12.5	91	2.6	112.3	**BF10-../DPE06LA4**	23	5900	-
0.12	11.5	99	2.4	123.5	**BF10-../DPE06LA4**	23	6100	-
0.12	11	104	2.3	128.9	**BF10-../DPE06LA4**	23	6200	-
0.12	9.9	115	2.1	141.8	**BF10-../DPE06LA4**	23	6400	-
0.12	9.3	123	1.95	151.2	**BF10Z-../DPE06LA4**	24	6400	-
0.12	8.5	134	1.8	166.2	**BF10Z-../DPE06LA4**	24	6400	-

The torques marked (*) are maximum permissible torques for service factor f_B=1,0.

0.12 kW

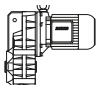

P_N	50 Hz			i	Type	m		
	n_2	M_2	f_B					
[kW]	[1/min]	[Nm]	[—]	[:1]		[kg]	[N]	[N]
0.12	7.8	146	1.65	180.1	**BF10Z-../DPE06LA4**	24	6400	-
0.12	7.1	161	1.5	198.0	**BF10Z-../DPE06LA4**	24	6400	-
0.12	6.6	173	1.4	214.5	**BF10Z-../DPE06LA4**	24	6400	-
0.12	6.0	191	1.25	235.8	**BF10Z-../DPE06LA4**	24	6400	-
0.12	5.5	205	1.15	257.4	**BF10Z-../DPE06LA4**	24	6400	-
0.12	5.0	225	1.05	283.1	**BF10Z-../DPE06LA4**	24	6400	-
0.12	4.4	260	0.92	324.3	**BF10Z-../DPE06LA4**	24	6400	-
0.12	4.0	285	0.84	356.6	**BF10Z-../DPE06LA4**	24	6400	-
0.12	3.8	260	1.0	377.9	**BF10G06-../DPE06LA4**	28	6400	-
0.12	3.3	300	0.87	424.5	**BF10G06-../DPE06LA4**	28	6400	-
0.12	2.7	260*	1.0	536.0	**BF10G06-../DPE06LA4**	28	6400	-
0.12	2.2	260*	1.0	643.8	**BF10G06-../DPE06LA4**	28	6400	-
0.12	1.9	260*	1.0	768.2	**BF10G06-../DPE06LA4**	28	6400	-
0.12	1.7	260*	1.0	845.1	**BF10G06-../DPE06LA4**	28	6400	-
0.12	1.5	260*	1.0	994.0	**BF10G06-../DPE06LA4**	28	6400	-
0.12	1.2	260*	1.0	1190	**BF10G06-../DPE06LA4**	28	6400	-
0.12	1.0	260*	1.0	1452	**BF10G06-../DPE06LA4**	28	6400	-
0.12	0.85	260*	1.0	1744	**BF10G06-../DPE06LA4**	28	6400	-
0.12	0.7	260*	1.0	2096	**BF10G06-../DPE06LA4**	28	6400	-
0.12	0.6	260*	1.0	2467	**BF10G06-../DPE06LA4**	28	6400	-
0.12	0.48	260*	1.0	2952	**BF10G06-../DPE06LA4**	28	6400	-
0.12	0.44	260*	1.0	3220	**BF10G06-../DPE06LA4**	28	6400	-
0.12	0.36	260*	1.0	3942	**BF10G06-../DPE06LA4**	28	6400	-
0.12	0.31	260*	1.0	4569	**BF10G06-../DPE06LA4**	28	6400	-
0.12	0.25	260*	1.0	5709	**BF10G06-../DPE06LA4**	28	6400	-
0.12	0.22	260*	1.0	6550	**BF10G06-../DPE06LA4**	28	6400	-
0.12	0.2	260*	1.0	7144	**BF10G06-../DPE06LA4**	28	6400	-
0.12	0.17	260*	1.0	8681	**BF10G06-../DPE06LA4**	28	6400	-
0.12	0.15	260*	1.0	9471	**BF10G06-../DPE06LA4**	28	6400	-
0.12	8.6	133	3.2	164.3	**BF20Z-../DPE06LA4**	31	7900	-
0.12	7.8	146	2.9	180.8	**BF20Z-../DPE06LA4**	31	7900	-
0.12	7.2	159	2.6	197.1	**BF20Z-../DPE06LA4**	31	7900	-
0.12	6.5	176	2.4	216.9	**BF20Z-../DPE06LA4**	31	7900	-
0.12	6.0	191	2.2	235.9	**BF20Z-../DPE06LA4**	31	7900	-
0.12	5.4	210	2.0	259.6	**BF20Z-../DPE06LA4**	31	7900	-
0.12	4.8	235	1.8	295.5	**BF20Z-../DPE06LA4**	31	7900	-
0.12	4.4	260	1.6	325.2	**BF20Z-../DPE06LA4**	31	7900	-
0.12	4.2	270	1.55	339.1	**BF20Z-../DPE06LA4**	31	7900	-
0.12	3.8	300	1.4	373.1	**BF20Z-../DPE06LA4**	31	7900	-
0.12	3.4	335	1.25	418.1	**BF20Z-../DPE06LA4**	31	7900	-
0.12	3.1	365	1.15	460.0	**BF20Z-../DPE06LA4**	31	7900	-
0.12	2.8	350	1.3	513.7	**BF20G06-../DPE06LA4**	34	7900	-
0.12	2.3	435	1.05	617.0	**BF20G06-../DPE06LA4**	34	7900	-
0.12	2.0	510	0.9	736.1	**BF20G06-../DPE06LA4**	34	7900	-
0.12	1.8	570	0.81	810.0	**BF20G06-../DPE06LA4**	34	7900	-
0.12	1.5	460*	1.0	952.7	**BF20G06-../DPE06LA4**	34	7900	-
0.12	1.3	460*	1.0	1140	**BF20G06-../DPE06LA4**	34	7900	-
0.12	1.1	460*	1.0	1392	**BF20G06-../DPE06LA4**	34	7900	-
0.12	0.95	460*	1.0	1533	**BF20G06-../DPE06LA4**	34	7900	-
0.12	0.8	460*	1.0	1764	**BF20G06-../DPE06LA4**	34	7900	-
0.12	0.65	460*	1.0	2192	**BF20G06-../DPE06LA4**	34	7900	-
0.12	0.55	460*	1.0	2579	**BF20G06-../DPE06LA4**	34	7900	-
0.12	0.5	460*	1.0	2829	**BF20G06-../DPE06LA4**	34	7900	-
0.12	0.46	460*	1.0	3086	**BF20G06-../DPE06LA4**	34	7900	-
0.12	0.38	460*	1.0	3778	**BF20G06-../DPE06LA4**	34	7900	-
0.12	0.32	460*	1.0	4379	**BF20G06-../DPE06LA4**	34	7900	-
0.12	0.26	460*	1.0	5471	**BF20G06-../DPE06LA4**	34	7900	-
0.12	0.21	460*	1.0	6847	**BF20G06-../DPE06LA4**	34	7900	-
0.12	0.17	460*	1.0	8320	**BF20G06-../DPE06LA4**	34	7900	-
0.12	0.16	460*	1.0	9077	**BF20G06-../DPE06LA4**	34	7900	-
0.12	6.3	181	3.2	224.8	**BF30Z-../DPE06LA4**	42	7400	-
0.12	5.7	200	2.9	247.3	**BF30Z-../DPE06LA4**	42	7400	-
0.12	5.4	210	2.7	263.5	**BF30Z-../DPE06LA4**	42	7400	-
0.12	4.9	230	2.5	289.8	**BF30Z-../DPE06LA4**	42	7400	-
0.12	4.6	245	2.3	310.7	**BF30Z-../DPE06LA4**	42	7400	-
0.12	4.1	275	2.1	341.8	**BF30Z-../DPE06LA4**	42	7400	-
0.12	3.8	300	1.9	375.1	**BF30Z-../DPE06LA4**	42	7400	-
0.12	3.4	335	1.7	412.6	**BF30Z-../DPE06LA4**	42	7400	-

The torques marked (*) are maximum permissible torques for service factor f_B=1,0.

0.12 kW

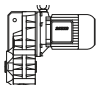

P_N	50 Hz			i	Type	m		
	n_2	M_2	f_B					
[kW]	[1/min]	[Nm]	[—]	[:1]		[kg]	[N]	[N]
0.12	3.1	365	1.6	463.3	**BF30Z-../DPE06LA4**	42	7400	-
0.12	2.7	420	1.35	537.0	**BF30Z-../DPE06LA4**	42	7400	-
0.12	2.4	475	1.2	590.7	**BF30Z-../DPE06LA4**	42	7400	-
0.12	2.3	435	1.45	622.4	**BF30G06-../DPE06LA4**	45	7400	-
0.12	2.0	510	1.25	705.1	**BF30G06-../DPE06LA4**	45	7400	-
0.12	1.8	570	1.1	817.1	**BF30G06-../DPE06LA4**	45	7400	-
0.12	1.5	690	0.91	961.1	**BF30G06-../DPE06LA4**	45	7400	-
0.12	1.3	630*	1.0	1150	**BF30G06-../DPE06LA4**	45	7400	-
0.12	1.1	630*	1.0	1286	**BF30G06-../DPE06LA4**	45	7400	-
0.12	1.0	630*	1.0	1404	**BF30G06-../DPE06LA4**	45	7400	-
0.12	0.85	630*	1.0	1686	**BF30G06-../DPE06LA4**	45	7400	-
0.12	0.7	630*	1.0	2026	**BF30G06-../DPE06LA4**	45	7400	-
0.12	0.6	630*	1.0	2386	**BF30G06-../DPE06LA4**	45	7400	-
0.12	0.5	630*	1.0	2854	**BF30G06-../DPE06LA4**	45	7400	-
0.12	0.41	630*	1.0	3493	**BF30G06-../DPE06LA4**	45	7400	-
0.12	0.37	630*	1.0	3811	**BF30G06-../DPE06LA4**	45	7400	-
0.12	0.32	630*	1.0	4417	**BF30G06-../DPE06LA4**	45	7400	-
0.12	0.28	630*	1.0	5060	**BF30G06-../DPE06LA4**	45	7400	-
0.12	0.23	630*	1.0	6333	**BF30G06-../DPE06LA4**	45	7400	-
0.12	0.2	630*	1.0	7206	**BF30G06-../DPE06LA4**	45	7400	-
0.12	0.18	630*	1.0	7861	**BF30G06-../DPE06LA4**	45	7400	-
0.12	0.16	630*	1.0	9157	**BF30G06-../DPE06LA4**	45	7400	-
0.12	4.1	275	3.3	346.8	**BF40Z-../DPE06LA4**	53	10600	-
0.12	3.7	305	3.0	381.5	**BF40Z-../DPE06LA4**	53	10600	-
0.12	3.4	335	2.7	417.3	**BF40Z-../DPE06LA4**	53	10600	-
0.12	3.1	365	2.5	459.1	**BF40Z-../DPE06LA4**	53	10600	-
0.12	2.8	405	2.2	514.6	**BF40Z-../DPE06LA4**	53	10600	-
0.12	2.5	455	2.0	566.1	**BF40Z-../DPE06LA4**	53	10600	-
0.12	2.0	365	2.7	731.6	**BF40G10-../DPE06LA4**	58	10600	-
0.12	1.6	490	2.0	928.9	**BF40G10-../DPE06LA4**	58	10600	-
0.12	1.3	640	1.55	1106	**BF40G10-../DPE06LA4**	58	10600	-
0.12	1.1	800	1.25	1324	**BF40G10-../DPE06LA4**	58	10600	-
0.12	0.95	940	1.05	1484	**BF40G10-../DPE06LA4**	58	10600	-
0.12	0.8	1000*	1.0	1810	**BF40G10-../DPE06LA4**	58	10600	-
0.12	0.75	1000*	1.0	1997	**BF40G10-../DPE06LA4**	58	10600	-
0.12	0.6	1000*	1.0	2536	**BF40G10-../DPE06LA4**	58	10600	-
0.12	0.5	1000*	1.0	2810	**BF40G10-../DPE06LA4**	58	10600	-
0.12	0.42	1000*	1.0	3346	**BF40G10-../DPE06LA4**	58	10600	-
0.12	0.36	1000*	1.0	3985	**BF40G10-../DPE06LA4**	58	10600	-
0.12	0.3	1000*	1.0	4784	**BF40G10-../DPE06LA4**	58	10600	-
0.12	0.26	1000*	1.0	5439	**BF40G10-../DPE06LA4**	58	10600	-
0.12	0.22	1000*	1.0	6377	**BF40G10-../DPE06LA4**	58	10600	-
0.12	0.18	1000*	1.0	7875	**BF40G10-../DPE06LA4**	58	10600	-
0.12	0.16	1000*	1.0	9042	**BF40G10-../DPE06LA4**	58	10600	-
0.12	2.9	395	3.3	496.4	**BF50Z-../DPE06LA4**	82	13600	-
0.12	2.6	440	3.0	555.2	**BF50Z-../DPE06LA4**	82	13600	-
0.12	1.7	465	3.0	864.5	**BF50G10-../DPE06LA4**	86	13600	-
0.12	1.4	590	2.4	1029	**BF50G10-../DPE06LA4**	86	13600	-
0.12	1.2	740	1.9	1203	**BF50G10-../DPE06LA4**	86	13600	-
0.12	1.1	800	1.75	1359	**BF50G10-../DPE06LA4**	86	13600	-
0.12	0.95	930	1.5	1520	**BF50G10-../DPE06LA4**	86	13600	-
0.12	0.85	1060	1.3	1684	**BF50G10-../DPE06LA4**	86	13600	-
0.12	0.7	1330	1.05	2059	**BF50G10-../DPE06LA4**	86	13600	-
0.12	0.6	1400*	1.0	2360	**BF50G10-../DPE06LA4**	86	13600	-
0.12	0.5	1400*	1.0	2810	**BF50G10-../DPE06LA4**	86	13600	-
0.12	0.42	1400*	1.0	3348	**BF50G10-../DPE06LA4**	86	13600	-
0.12	0.35	1400*	1.0	4019	**BF50G10-../DPE06LA4**	86	13600	-
0.12	0.28	1400*	1.0	5062	**BF50G10-../DPE06LA4**	86	13600	-
0.12	0.24	1400*	1.0	5935	**BF50G10-../DPE06LA4**	86	13600	-
0.12	0.2	1400*	1.0	7329	**BF50G10-../DPE06LA4**	86	13600	-
0.12	0.18	1400*	1.0	8120	**BF50G10-../DPE06LA4**	86	13600	-
0.12	0.16	1400*	1.0	9324	**BF50G10-../DPE06LA4**	86	13600	-
0.12	0.95	820	3.0	1494	**BF60G20-../DPE06LA4**	134	15300	43300
0.12	0.85	920	2.7	1658	**BF60G20-../DPE06LA4**	134	15300	43300
0.12	0.75	1080	2.3	1955	**BF60G20-../DPE06LA4**	134	15300	43300
0.12	0.65	1300	1.9	2172	**BF60G20-../DPE06LA4**	134	15300	43300
0.12	0.55	1580	1.6	2781	**BF60G20-../DPE06LA4**	134	15300	43300

The torques marked (*) are maximum permissible torques for service factor f_B=1,0.

0.12 kW

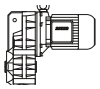

P_N	50 Hz			i	Type	m		
	n_2	M_2	f_B					
[kW]	[1/min]	[Nm]	[—]	[:1]		[kg]	[N]	[N]
0.12	0.44	2100	1.2	3237	**BF60G20-../DPE06LA4**	134	15300	43300
0.12	0.37	2500*	1.0	3883	**BF60G20-../DPE06LA4**	134	15300	43300
0.12	0.31	2500*	1.0	4646	**BF60G20-../DPE06LA4**	134	15300	43300
0.12	0.27	2500*	1.0	5241	**BF60G20-../DPE06LA4**	134	15300	43300
0.12	0.24	2500*	1.0	6014	**BF60G20-../DPE06LA4**	134	15300	43300
0.12	0.21	2500*	1.0	6679	**BF60G20-../DPE06LA4**	134	15300	43300
0.12	0.18	2500*	1.0	8235	**BF60G20-../DPE06LA4**	134	15300	43300
0.12	0.5	1800	3.2	2849	**BF70G20-../DPE06LA4**	212	16100	47700
0.12	0.41	2300	2.5	3417	**BF70G20-../DPE06LA4**	212	16100	47700
0.12	0.35	2750	2.1	4090	**BF70G20-../DPE06LA4**	212	16100	47700
0.12	0.31	3200	1.8	4542	**BF70G20-../DPE06LA4**	212	16100	47700
0.12	0.28	3600	1.6	5124	**BF70G20-../DPE06LA4**	212	16100	47700
0.12	0.25	4050	1.4	5691	**BF70G20-../DPE06LA4**	212	16100	47700
0.12	0.22	4700	1.2	6530	**BF70G20-../DPE06LA4**	212	16100	47700
0.12	0.2	5200	1.1	7248	**BF70G20-../DPE06LA4**	212	16100	47700
0.12	0.18	5700*	1.0	8052	**BF70G20-../DPE06LA4**	212	16100	47700

0.18 kW

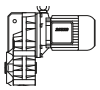

P_N	50 Hz			i	Type	m		
	n_2	M_2	f_B					
[kW]	[1/min]	[Nm]	[—]	[:1]		[kg]	[N]	[N]
0.18	183	9.3	7.3	7.66	**BF06-../DPE07LA4**	14	1800	-
0.18	153	11.2	6.3	9.21	**BF06-../DPE07LA4**	14	1900	-
0.18	116	14.8	5.1	12.07	**BF06-../DPE07LA4**	14	2000	-
0.18	99	17.3	4.9	14.21	**BF06-../DPE07LA4**	14	2100	-
0.18	83	20.5	4.6	16.99	**BF06-../DPE07LA4**	14	2500	-
0.18	69	24.5	3.9	20.42	**BF06-../DPE07LA4**	14	2700	-
0.18	53	32	3.0	26.76	**BF06-../DPE07LA4**	14	3000	-
0.18	44.5	38.5	2.5	31.50	**BF06-../DPE07LA4**	14	3200	-
0.18	37.5	45.5	2.1	37.69	**BF06-../DPE07LA4**	14	3500	-
0.18	30.5	56	1.7	46.14	**BF06-../DPE07LA4**	14	3800	-
0.18	24.5	70	1.35	58.33	**BF06-../DPE07LA4**	14	4000	-
0.18	21	81	1.15	66.82	**BF06-../DPE07LA4**	14	4000	-
0.18	17	101	0.94	83.61	**BF06-../DPE07LA4**	14	4000	-
0.18	15	114	0.83	95.16	**BF06-../DPE07LA4**	14	4000	-
0.18	23	74	3.2	61.55	**BF10-../DPE07LA4**	26	4700	-
0.18	21	81	3.0	67.69	**BF10-../DPE07LA4**	26	4900	-
0.18	18.5	92	2.6	77.55	**BF10-../DPE07LA4**	26	5100	-
0.18	16.5	104	2.3	85.27	**BF10-../DPE07LA4**	26	5300	-
0.18	15.5	110	2.2	90.91	**BF10-../DPE07LA4**	26	5400	-
0.18	14.5	118	2.0	99.97	**BF10-../DPE07LA4**	26	5600	-
0.18	12.5	137	1.75	112.3	**BF10-../DPE07LA4**	26	5900	-
0.18	11.5	149	1.6	123.5	**BF10-../DPE07LA4**	26	6100	-
0.18	11	156	1.55	128.9	**BF10-../DPE07LA4**	26	6200	-
0.18	9.9	173	1.4	141.8	**BF10-../DPE07LA4**	26	6400	-
0.18	9.3	184	1.3	151.2	**BF10Z-../DPE07LA4**	27	6400	-
0.18	8.5	200	1.2	166.2	**BF10Z-../DPE07LA4**	27	6400	-
0.18	7.8	220	1.1	180.1	**BF10Z-../DPE07LA4**	27	6400	-
0.18	7.1	240	1.0	198.0	**BF10Z-../DPE07LA4**	27	6400	-
0.18	6.6	260	0.92	214.5	**BF10Z-../DPE07LA4**	27	6400	-
0.18	6.0	285	0.84	235.8	**BF10Z-../DPE07LA4**	27	6400	-
0.18	13	132	3.2	110.2	**BF20-../DPE07LA4**	32	7300	-
0.18	11.5	149	2.8	123.5	**BF20-../DPE07LA4**	32	7600	-
0.18	10.5	163	2.6	135.9	**BF20-../DPE07LA4**	32	7900	-
0.18	10	171	2.5	141.2	**BF20Z-../DPE07LA4**	34	7900	-
0.18	9.1	188	2.2	155.4	**BF20Z-../DPE07LA4**	34	7900	-
0.18	8.6	199	2.1	164.3	**BF20Z-../DPE07LA4**	34	7900	-
0.18	7.8	220	1.9	180.8	**BF20Z-../DPE07LA4**	34	7900	-
0.18	7.2	235	1.8	197.1	**BF20Z-../DPE07LA4**	34	7900	-
0.18	6.5	260	1.6	216.9	**BF20Z-../DPE07LA4**	34	7900	-
0.18	6.0	285	1.45	235.9	**BF20Z-../DPE07LA4**	34	7900	-
0.18	5.4	315	1.35	259.6	**BF20Z-../DPE07LA4**	34	7900	-

The torques marked (*) are maximum permissible torques for service factor f_B=1,0.

0.18 kW

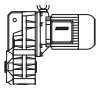

P_N	50 Hz			i	Type	m		
	n_2	M_2	f_B					
[kW]	[1/min]	[Nm]	[—]	[:1]		[kg]	[N]	[N]
0.18	4.8	355	1.2	295.5	**BF20Z-../DPE07LA4**	34	7900	-
0.18	4.4	390	1.1	325.2	**BF20Z-../DPE07LA4**	34	7900	-
0.18	4.2	405	1.05	339.1	**BF20Z-../DPE07LA4**	34	7900	-
0.18	3.8	450	0.93	373.1	**BF20Z-../DPE07LA4**	34	7900	-
0.18	3.4	500	0.84	418.1	**BF20Z-../DPE07LA4**	34	7900	-
0.18	2.8	550	0.84	513.7	**BF20G06-../DPE07LA4**	37	7900	-
0.18	9.3	184	3.1	150.7	**BF30Z-../DPE07LA4**	45	7400	-
0.18	8.5	200	2.9	165.8	**BF30Z-../DPE07LA4**	45	7400	-
0.18	8.0	210	2.7	176.6	**BF30Z-../DPE07LA4**	45	7400	-
0.18	7.3	235	2.4	194.3	**BF30Z-../DPE07LA4**	45	7400	-
0.18	6.3	270	2.1	224.8	**BF30Z-../DPE07LA4**	45	7400	-
0.18	5.7	300	1.9	247.3	**BF30Z-../DPE07LA4**	45	7400	-
0.18	5.4	315	1.85	263.5	**BF30Z-../DPE07LA4**	45	7400	-
0.18	4.9	350	1.65	289.8	**BF30Z-../DPE07LA4**	45	7400	-
0.18	4.6	370	1.55	310.7	**BF30Z-../DPE07LA4**	45	7400	-
0.18	4.1	415	1.4	341.8	**BF30Z-../DPE07LA4**	45	7400	-
0.18	3.8	450	1.3	375.1	**BF30Z-../DPE07LA4**	45	7400	-
0.18	3.4	500	1.15	412.6	**BF30Z-../DPE07LA4**	45	7400	-
0.18	3.1	550	1.05	463.3	**BF30Z-../DPE07LA4**	45	7400	-
0.18	2.7	630	0.91	537.0	**BF30Z-../DPE07LA4**	45	7400	-
0.18	2.4	710	0.81	590.7	**BF30Z-../DPE07LA4**	45	7400	-
0.18	2.3	680	0.93	622.4	**BF30G06-../DPE07LA4**	47	7400	-
0.18	6.3	270	3.3	222.4	**BF40Z-../DPE07LA4**	55	10600	-
0.18	5.6	305	3.0	253.2	**BF40Z-../DPE07LA4**	55	10600	-
0.18	5.1	335	2.7	278.5	**BF40Z-../DPE07LA4**	55	10600	-
0.18	4.8	355	2.5	295.1	**BF40Z-../DPE07LA4**	55	10600	-
0.18	4.4	390	2.3	324.7	**BF40Z-../DPE07LA4**	55	10600	-
0.18	4.1	415	2.2	346.8	**BF40Z-../DPE07LA4**	55	10600	-
0.18	3.7	460	1.95	381.5	**BF40Z-../DPE07LA4**	55	10600	-
0.18	3.4	500	1.8	417.3	**BF40Z-../DPE07LA4**	55	10600	-
0.18	3.1	550	1.65	459.1	**BF40Z-../DPE07LA4**	55	10600	-
0.18	2.8	610	1.5	514.6	**BF40Z-../DPE07LA4**	55	10600	-
0.18	2.5	680	1.3	566.1	**BF40Z-../DPE07LA4**	55	10600	-
0.18	2.4	520	1.9	597.3	**BF40G10-../DPE07LA4**	61	10600	-
0.18	2.0	650	1.55	731.6	**BF40G10-../DPE07LA4**	61	10600	-
0.18	1.6	850	1.2	928.9	**BF40G10-../DPE07LA4**	61	10600	-
0.18	1.3	1080	0.93	1106	**BF40G10-../DPE07LA4**	61	10600	-
0.18	4.0	425	3.1	354.0	**BF50Z-../DPE07LA4**	85	13600	-
0.18	3.6	475	2.7	392.8	**BF50Z-../DPE07LA4**	85	13600	-
0.18	3.2	530	2.5	439.3	**BF50Z-../DPE07LA4**	85	13600	-
0.18	2.9	590	2.2	496.4	**BF50Z-../DPE07LA4**	85	13600	-
0.18	2.6	660	1.95	555.2	**BF50Z-../DPE07LA4**	85	13600	-
0.18	2.1	620	2.3	680.9	**BF50G10-../DPE07LA4**	89	13600	-
0.18	1.7	800	1.75	864.5	**BF50G10-../DPE07LA4**	89	13600	-
0.18	1.4	1000	1.4	1029	**BF50G10-../DPE07LA4**	89	13600	-
0.18	1.2	1220	1.15	1203	**BF50G10-../DPE07LA4**	89	13600	-
0.18	1.1	1320	1.05	1359	**BF50G10-../DPE07LA4**	89	13600	-
0.18	1.5	870	2.9	937.6	**BF60G20-../DPE07LA4**	136	15300	43300
0.18	1.2	1120	2.2	1211	**BF60G20-../DPE07LA4**	136	15300	43300
0.18	0.95	1430	1.75	1494	**BF60G20-../DPE07LA4**	136	15300	43300
0.18	0.85	1600	1.55	1658	**BF60G20-../DPE07LA4**	136	15300	43300
0.18	0.75	1840	1.35	1955	**BF60G20-../DPE07LA4**	136	15300	43300
0.18	0.65	2150	1.15	2172	**BF60G20-../DPE07LA4**	136	15300	43300
0.18	0.75	1850	3.1	1912	**BF70G20-../DPE07LA4**	215	16100	47700
0.18	0.6	2350	2.4	2448	**BF70G20-../DPE07LA4**	215	16100	47700
0.18	0.5	2900	1.95	2849	**BF70G20-../DPE07LA4**	215	16100	47700
0.18	0.41	3700	1.55	3417	**BF70G20-../DPE07LA4**	215	16100	47700
0.18	0.35	4400	1.3	4090	**BF70G20-../DPE07LA4**	215	16100	47700
0.18	0.31	5000	1.15	4542	**BF70G20-../DPE07LA4**	215	16100	47700
0.18	0.28	5600	1.0	5124	**BF70G20-../DPE07LA4**	215	16100	47700

The torques marked (*) are maximum permissible torques for service factor f_B=1,0.

0.25 kW

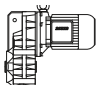

P_N	50 Hz			i	Type	m		
	n_2	M_2	f_B					
[kW]	[1/min]	[Nm]	[—]	[:1]		[kg]	[N]	[N]
0.25	255	9.3	6.7	5.72	**BF06-../DPE08MA4**	16	1600	-
0.25	188	12.6	5.4	7.66	**BF06-../DPE08MA4**	16	1800	-
0.25	157	15.2	4.6	9.21	**BF06-../DPE08MA4**	16	1900	-
0.25	120	19.8	3.8	12.07	**BF06-../DPE08MA4**	16	2000	-
0.25	102	23	3.7	14.21	**BF06-../DPE08MA4**	16	2100	-
0.25	85	28	3.4	16.99	**BF06-../DPE08MA4**	16	2500	-
0.25	71	33.5	2.8	20.42	**BF06-../DPE08MA4**	16	2700	-
0.25	54	44	2.2	26.76	**BF06-../DPE08MA4**	16	3000	-
0.25	46	51	1.85	31.50	**BF06-../DPE08MA4**	16	3200	-
0.25	38.5	62	1.55	37.69	**BF06-../DPE08MA4**	16	3500	-
0.25	31.5	75	1.25	46.14	**BF06-../DPE08MA4**	16	3800	-
0.25	25	95	1.0	58.33	**BF06-../DPE08MA4**	16	4000	-
0.25	22	108	0.88	66.82	**BF06-../DPE08MA4**	16	4000	-
0.25	30.5	78	3.1	47.35	**BF10-../DPE08MA4**	27	4250	-
0.25	28.5	83	2.9	51.28	**BF10-../DPE08MA4**	27	4400	-
0.25	26	91	2.6	56.39	**BF10-../DPE08MA4**	27	4550	-
0.25	23.5	101	2.4	61.55	**BF10-../DPE08MA4**	27	4700	-
0.25	21.5	111	2.2	67.69	**BF10-../DPE08MA4**	27	4900	-
0.25	19	125	1.9	77.55	**BF10-../DPE08MA4**	27	5100	-
0.25	17	140	1.7	85.27	**BF10-../DPE08MA4**	27	5300	-
0.25	16	149	1.6	90.91	**BF10-../DPE08MA4**	27	5400	-
0.25	14.5	164	1.45	99.97	**BF10-../DPE08MA4**	27	5600	-
0.25	13	183	1.3	112.3	**BF10-../DPE08MA4**	27	5900	-
0.25	12	198	1.2	123.5	**BF10-../DPE08MA4**	27	6100	-
0.25	9.6	245	0.98	151.2	**BF10Z-../DPE08MA4**	28	6400	-
0.25	8.7	270	0.89	166.2	**BF10Z-../DPE08MA4**	28	6400	-
0.25	8.0	295	0.81	180.1	**BF10Z-../DPE08MA4**	28	6400	-
0.25	16.5	144	2.9	87.31	**BF20-../DPE08MA4**	33	6600	-
0.25	14.5	164	2.6	100.2	**BF20-../DPE08MA4**	33	7000	-
0.25	13.5	176	2.4	110.2	**BF20-../DPE08MA4**	33	7300	-
0.25	12	198	2.1	123.5	**BF20-../DPE08MA4**	33	7600	-
0.25	11	215	1.95	135.9	**BF20-../DPE08MA4**	33	7900	-
0.25	10.5	225	1.85	141.2	**BF20Z-../DPE08MA4**	35	7900	-
0.25	9.3	255	1.65	155.4	**BF20Z-../DPE08MA4**	35	7900	-
0.25	8.8	270	1.55	164.3	**BF20Z-../DPE08MA4**	35	7900	-
0.25	8.0	295	1.4	180.8	**BF20Z-../DPE08MA4**	35	7900	-
0.25	7.4	320	1.3	197.1	**BF20Z-../DPE08MA4**	35	7900	-
0.25	6.7	355	1.2	216.9	**BF20Z-../DPE08MA4**	35	7900	-
0.25	6.2	385	1.1	235.9	**BF20Z-../DPE08MA4**	35	7900	-
0.25	5.6	425	0.99	259.6	**BF20Z-../DPE08MA4**	35	7900	-
0.25	4.9	485	0.87	295.5	**BF20Z-../DPE08MA4**	35	7900	-
0.25	13.5	176	3.3	107.6	**BF30-../DPE08MA4**	43	6700	-
0.25	12.5	191	3.0	118.3	**BF30-../DPE08MA4**	43	7000	-
0.25	12	198	2.9	124.7	**BF30-../DPE08MA4**	43	7100	-
0.25	11	215	2.7	137.1	**BF30-../DPE08MA4**	43	7400	-
0.25	9.6	245	2.3	150.7	**BF30Z-../DPE08MA4**	46	7400	-
0.25	8.7	270	2.1	165.8	**BF30Z-../DPE08MA4**	46	7400	-
0.25	8.2	290	2.0	176.6	**BF30Z-../DPE08MA4**	46	7400	-
0.25	7.5	315	1.85	194.3	**BF30Z-../DPE08MA4**	46	7400	-
0.25	6.5	365	1.6	224.8	**BF30Z-../DPE08MA4**	46	7400	-
0.25	5.9	400	1.45	247.3	**BF30Z-../DPE08MA4**	46	7400	-
0.25	5.5	430	1.35	263.5	**BF30Z-../DPE08MA4**	46	7400	-
0.25	5.0	475	1.2	289.8	**BF30Z-../DPE08MA4**	46	7400	-
0.25	4.7	500	1.15	310.7	**BF30Z-../DPE08MA4**	46	7400	-
0.25	4.3	550	1.05	341.8	**BF30Z-../DPE08MA4**	46	7400	-
0.25	3.9	610	0.94	375.1	**BF30Z-../DPE08MA4**	46	7400	-
0.25	3.5	680	0.85	412.6	**BF30Z-../DPE08MA4**	46	7400	-
0.25	8.5	280	3.2	171.2	**BF40Z-../DPE08MA4**	56	10600	-
0.25	7.7	310	2.9	188.3	**BF40Z-../DPE08MA4**	56	10600	-
0.25	7.2	330	2.7	202.2	**BF40Z-../DPE08MA4**	56	10600	-
0.25	6.5	365	2.5	222.4	**BF40Z-../DPE08MA4**	56	10600	-
0.25	5.7	415	2.2	253.2	**BF40Z-../DPE08MA4**	56	10600	-
0.25	5.2	455	2.0	278.5	**BF40Z-../DPE08MA4**	56	10600	-
0.25	4.9	485	1.85	295.1	**BF40Z-../DPE08MA4**	56	10600	-
0.25	4.5	530	1.7	324.7	**BF40Z-../DPE08MA4**	56	10600	-
0.25	4.2	560	1.6	346.8	**BF40Z-../DPE08MA4**	56	10600	-

The torques marked (*) are maximum permissible torques for service factor f_B=1,0.

0.25 kW

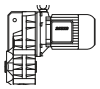

P_N	50 Hz			i	Type	m		
	n_2	M_2	f_B					
[kW]	[1/min]	[Nm]	[—]	[:1]		[kg]	[N]	[N]
0.25	3.8	620	1.45	381.5	**BF40Z-../DPE08MA4**	56	10600	-
0.25	3.5	680	1.3	417.3	**BF40Z-../DPE08MA4**	56	10600	-
0.25	3.2	740	1.2	459.1	**BF40Z-../DPE08MA4**	56	10600	-
0.25	2.8	850	1.05	514.6	**BF40Z-../DPE08MA4**	56	10600	-
0.25	2.6	910	0.99	566.1	**BF40Z-../DPE08MA4**	56	10600	-
0.25	2.5	760	1.3	597.3	**BF40G10-../DPE08MA4**	62	10600	-
0.25	2.0	980	1.0	731.6	**BF40G10-../DPE08MA4**	62	10600	-
0.25	5.9	400	3.3	247.5	**BF50Z-../DPE08MA4**	86	13600	-
0.25	5.3	450	2.9	276.8	**BF50Z-../DPE08MA4**	86	13600	-
0.25	4.6	510	2.5	316.6	**BF50Z-../DPE08MA4**	86	13600	-
0.25	4.1	580	2.2	354.0	**BF50Z-../DPE08MA4**	86	13600	-
0.25	3.7	640	2.0	392.8	**BF50Z-../DPE08MA4**	86	13600	-
0.25	3.3	720	1.8	439.3	**BF50Z-../DPE08MA4**	86	13600	-
0.25	3.0	790	1.65	496.4	**BF50Z-../DPE08MA4**	86	13600	-
0.25	2.6	910	1.45	555.2	**BF50Z-../DPE08MA4**	86	13600	-
0.25	2.2	890	1.55	680.9	**BF50G10-../DPE08MA4**	90	13600	-
0.25	1.7	1190	1.2	864.5	**BF50G10-../DPE08MA4**	90	13600	-
0.25	1.4	1480	0.95	1029	**BF50G10-../DPE08MA4**	90	13600	-
0.25	3.2	740	3.1	459.9	**BF60Z-../DPE08MA4**	130	15300	43300
0.25	2.9	820	2.8	510.3	**BF60Z-../DPE08MA4**	130	15300	43300
0.25	2.1	840	3.0	689.0	**BF60G20-../DPE08MA4**	137	15300	43300
0.25	1.8	1020	2.5	813.2	**BF60G20-../DPE08MA4**	137	15300	43300
0.25	1.6	1210	2.1	937.6	**BF60G20-../DPE08MA4**	137	15300	43300
0.25	1.2	1680	1.5	1211	**BF60G20-../DPE08MA4**	137	15300	43300
0.25	1.0	2000	1.25	1494	**BF60G20-../DPE08MA4**	137	15300	43300
0.25	0.9	2200	1.15	1658	**BF60G20-../DPE08MA4**	137	15300	43300
0.25	1.1	1810	3.1	1390	**BF70G20-../DPE08MA4**	216	16100	47700
0.25	0.9	2200	2.6	1621	**BF70G20-../DPE08MA4**	216	16100	47700
0.25	0.8	2550	2.2	1912	**BF70G20-../DPE08MA4**	216	16100	47700
0.25	0.6	3500	1.65	2448	**BF70G20-../DPE08MA4**	216	16100	47700
0.25	0.55	3850	1.5	2849	**BF70G20-../DPE08MA4**	216	16100	47700
0.25	0.43	5000	1.15	3417	**BF70G20-../DPE08MA4**	216	16100	47700
0.25	0.42	3450	3.0	3461	**BF80G40-../DPE08MA4**	340	39600	75000
0.25	0.38	4000	2.6	3843	**BF80G40-../DPE08MA4**	340	39600	75000
0.25	0.33	4900	2.1	4411	**BF80G40-../DPE08MA4**	340	39600	75000
0.25	0.3	5600	1.9	4895	**BF80G40-../DPE08MA4**	340	39600	75000
0.25	0.25	7200	1.45	5926	**BF80G40-../DPE08MA4**	340	39600	75000
0.25	0.21	9000	1.15	6999	**BF80G40-../DPE08MA4**	340	39600	75000
0.25	0.19	10200	1.05	7895	**BF80G40-../DPE08MA4**	340	39600	75000
0.25	0.25	7000	2.6	5888	**BF90G50-../DPE08MA4**	610	42800	120000
0.25	0.23	7800	2.4	6529	**BF90G50-../DPE08MA4**	610	42800	120000
0.25	0.2	9400	1.95	7533	**BF90G50-../DPE08MA4**	610	42800	120000
0.25	0.18	10700	1.75	8350	**BF90G50-../DPE08MA4**	610	42800	120000
0.25	0.16	12400	1.5	9348	**BF90G50-../DPE08MA4**	610	42800	120000

0.37 kW

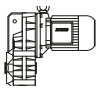

P_N	50 Hz			i	Type	m		
	n_2	M_2	f_B					
[kW]	[1/min]	[Nm]	[—]	[:1]		[kg]	[N]	[N]
0.37	255	13.8	4.5	5.72	**BF06-../DPE08LA4**	17	1600	-
0.37	189	18.6	3.7	7.66	**BF06-../DPE08LA4**	17	1800	-
0.37	157	22.5	3.1	9.21	**BF06-../DPE08LA4**	17	1900	-
0.37	120	29	2.6	12.07	**BF06-../DPE08LA4**	17	2000	-
0.37	102	34.5	2.5	14.21	**BF06-../DPE08LA4**	17	2100	-
0.37	86	41	2.3	16.99	**BF06-../DPE08LA4**	17	2500	-
0.37	71	49.5	1.9	20.42	**BF06-../DPE08LA4**	17	2700	-
0.37	54	65	1.45	26.76	**BF06-../DPE08LA4**	17	3000	-
0.37	46	76	1.25	31.50	**BF06-../DPE08LA4**	17	3200	-
0.37	38.5	91	1.05	37.69	**BF06-../DPE08LA4**	17	3500	-
0.37	31.5	112	0.85	46.14	**BF06-../DPE08LA4**	17	3800	-

The torques marked (*) are maximum permissible torques for service factor f_B=1,0.

0.37 kW

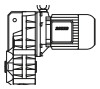

P_N	50 Hz			i	Type	m		
	n_2	M_2	f_B					
[kW]	[1/min]	[Nm]	[—]	[:1]		[kg]	[N]	[N]
0.37	46.5	75	3.2	31.31	**BF10-../DPE08LA4**	28	3600	-
0.37	40	88	2.7	36.15	**BF10-../DPE08LA4**	28	3800	-
0.37	36.5	96	2.5	39.75	**BF10-../DPE08LA4**	28	3950	-
0.37	34	103	2.3	43.06	**BF10-../DPE08LA4**	28	4100	-
0.37	31	113	2.1	47.35	**BF10-../DPE08LA4**	28	4250	-
0.37	28.5	123	1.95	51.28	**BF10-../DPE08LA4**	28	4400	-
0.37	26	135	1.8	56.39	**BF10-../DPE08LA4**	28	4550	-
0.37	23.5	150	1.6	61.55	**BF10-../DPE08LA4**	28	4700	-
0.37	21.5	164	1.45	67.69	**BF10-../DPE08LA4**	28	4900	-
0.37	19	185	1.3	77.55	**BF10-../DPE08LA4**	28	5100	-
0.37	17	205	1.15	85.27	**BF10-../DPE08LA4**	28	5300	-
0.37	16	220	1.1	90.91	**BF10-../DPE08LA4**	28	5400	-
0.37	14.5	240	1.0	99.97	**BF10-../DPE08LA4**	28	5600	-
0.37	13	270	0.89	112.3	**BF10-../DPE08LA4**	28	5900	-
0.37	12	290	0.83	123.5	**BF10-../DPE08LA4**	28	6100	-
0.37	27.5	128	3.3	53.43	**BF20-../DPE08LA4**	35	5500	-
0.37	25	141	3.0	58.24	**BF20-../DPE08LA4**	35	5600	-
0.37	23	153	2.7	64.08	**BF20-../DPE08LA4**	35	5900	-
0.37	21	168	2.5	69.70	**BF20-../DPE08LA4**	35	6100	-
0.37	19	185	2.3	76.69	**BF20-../DPE08LA4**	35	6300	-
0.37	17	205	2.0	87.31	**BF20-../DPE08LA4**	35	6600	-
0.37	15.5	225	1.85	96.08	**BF20-../DPE08LA4**	35	6900	-
0.37	14.5	240	1.75	100.2	**BF20-../DPE08LA4**	35	7000	-
0.37	13.5	260	1.6	110.2	**BF20-../DPE08LA4**	35	7300	-
0.37	12	290	1.45	123.5	**BF20-../DPE08LA4**	35	7600	-
0.37	11	320	1.3	135.9	**BF20-../DPE08LA4**	35	7900	-
0.37	10.5	335	1.25	141.2	**BF20Z-../DPE08LA4**	37	7900	-
0.37	9.3	375	1.1	155.4	**BF20Z-../DPE08LA4**	37	7900	-
0.37	8.8	400	1.05	164.3	**BF20Z-../DPE08LA4**	37	7900	-
0.37	8.0	440	0.95	180.8	**BF20Z-../DPE08LA4**	37	7900	-
0.37	7.4	475	0.88	197.1	**BF20Z-../DPE08LA4**	37	7900	-
0.37	6.7	520	0.81	216.9	**BF20Z-../DPE08LA4**	37	7900	-
0.37	20.5	172	3.3	72.13	**BF30-../DPE08LA4**	45	5700	-
0.37	18.5	191	3.0	79.34	**BF30-../DPE08LA4**	45	5900	-
0.37	17	205	2.8	87.08	**BF30-../DPE08LA4**	45	6200	-
0.37	15.5	225	2.6	95.79	**BF30-../DPE08LA4**	45	6400	-
0.37	13.5	260	2.2	107.6	**BF30-../DPE08LA4**	45	6700	-
0.37	12.5	280	2.1	118.3	**BF30-../DPE08LA4**	45	7000	-
0.37	12	290	2.0	124.7	**BF30-../DPE08LA4**	45	7100	-
0.37	11	320	1.8	137.1	**BF30-../DPE08LA4**	45	7400	-
0.37	9.6	365	1.6	150.7	**BF30Z-../DPE08LA4**	48	7400	-
0.37	8.8	400	1.45	165.8	**BF30Z-../DPE08LA4**	48	7400	-
0.37	8.2	430	1.35	176.6	**BF30Z-../DPE08LA4**	48	7400	-
0.37	7.5	470	1.2	194.3	**BF30Z-../DPE08LA4**	48	7400	-
0.37	6.5	540	1.05	224.8	**BF30Z-../DPE08LA4**	48	7400	-
0.37	5.9	590	0.97	247.3	**BF30Z-../DPE08LA4**	48	7400	-
0.37	5.5	640	0.9	263.5	**BF30Z-../DPE08LA4**	48	7400	-
0.37	5.0	700	0.82	289.8	**BF30Z-../DPE08LA4**	48	7400	-
0.37	12	290	3.1	124.5	**BF40-../DPE08LA4**	54	10200	-
0.37	11	320	2.8	137.0	**BF40-../DPE08LA4**	54	10600	-
0.37	10.5	335	2.7	141.4	**BF40Z-../DPE08LA4**	58	10600	-
0.37	9.3	375	2.4	155.6	**BF40Z-../DPE08LA4**	58	10600	-
0.37	8.5	415	2.2	171.2	**BF40Z-../DPE08LA4**	58	10600	-
0.37	7.7	455	2.0	188.3	**BF40Z-../DPE08LA4**	58	10600	-
0.37	7.2	490	1.85	202.2	**BF40Z-../DPE08LA4**	58	10600	-
0.37	6.5	540	1.65	222.4	**BF40Z-../DPE08LA4**	58	10600	-
0.37	5.8	600	1.5	253.2	**BF40Z-../DPE08LA4**	58	10600	-
0.37	5.2	670	1.35	278.5	**BF40Z-../DPE08LA4**	58	10600	-
0.37	4.9	720	1.25	295.1	**BF40Z-../DPE08LA4**	58	10600	-
0.37	4.5	780	1.15	324.7	**BF40Z-../DPE08LA4**	58	10600	-
0.37	4.2	840	1.05	346.8	**BF40Z-../DPE08LA4**	58	10600	-
0.37	3.8	920	0.98	381.5	**BF40Z-../DPE08LA4**	58	10600	-
0.37	3.5	1000	0.9	417.3	**BF40Z-../DPE08LA4**	58	10600	-
0.37	3.2	1100	0.82	459.1	**BF40Z-../DPE08LA4**	58	10600	-
0.37	2.5	1220	0.82	597.3	**BF40G10-../DPE08LA4**	63	10600	-
0.37	7.9	445	2.9	183.5	**BF50Z-../DPE08LA4**	88	13600	-

The torques marked (*) are maximum permissible torques for service factor f_B=1,0.

0.37 kW

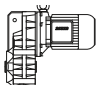

P_N	50 Hz			i	Type	m		
	n_2	M_2	f_B					
[kW]	[1/min]	[Nm]	[—]	[:1]		[kg]	[N]	[N]
0.37	7.1	495	2.6	205.2	**BF50Z-../DPE08LA4**	88	13600	-
0.37	5.9	590	2.2	247.5	**BF50Z-../DPE08LA4**	88	13600	-
0.37	5.3	660	1.95	276.8	**BF50Z-../DPE08LA4**	88	13600	-
0.37	4.6	760	1.7	316.6	**BF50Z-../DPE08LA4**	88	13600	-
0.37	4.1	860	1.5	354.0	**BF50Z-../DPE08LA4**	88	13600	-
0.37	3.7	950	1.35	392.8	**BF50Z-../DPE08LA4**	88	13600	-
0.37	3.3	1070	1.2	439.3	**BF50Z-../DPE08LA4**	88	13600	-
0.37	3.0	1170	1.1	496.4	**BF50Z-../DPE08LA4**	88	13600	-
0.37	2.7	1300	1.0	555.2	**BF50Z-../DPE08LA4**	88	13600	-
0.37	2.6	1180	1.2	555.9	**BF50G10-../DPE08LA4**	92	13600	-
0.37	2.2	1410	0.99	680.9	**BF50G10-../DPE08LA4**	92	13600	-
0.37	5.0	700	3.3	293.4	**BF60Z-../DPE08LA4**	131	15300	43300
0.37	4.5	780	2.9	325.6	**BF60Z-../DPE08LA4**	131	15300	43300
0.37	3.9	900	2.6	380.0	**BF60Z-../DPE08LA4**	131	15300	43300
0.37	3.5	1000	2.3	421.6	**BF60Z-../DPE08LA4**	131	15300	43300
0.37	3.2	1100	2.1	459.9	**BF60Z-../DPE08LA4**	131	15300	43300
0.37	2.9	1210	1.9	510.3	**BF60Z-../DPE08LA4**	131	15300	43300
0.37	2.6	1120	2.2	569.3	**BF60G20-../DPE08LA4**	139	15300	43300
0.37	2.1	1390	1.8	689.0	**BF60G20-../DPE08LA4**	139	15300	43300
0.37	1.8	1650	1.5	813.2	**BF60G20-../DPE08LA4**	139	15300	43300
0.37	1.6	1930	1.3	937.6	**BF60G20-../DPE08LA4**	139	15300	43300
0.37	1.2	2600	0.96	1211	**BF60G20-../DPE08LA4**	139	15300	43300
0.37	1.7	1820	3.1	872.1	**BF70G20-../DPE08LA4**	217	16100	47700
0.37	1.5	2050	2.8	1017	**BF70G20-../DPE08LA4**	217	16100	47700
0.37	1.1	2850	2.0	1390	**BF70G20-../DPE08LA4**	217	16100	47700
0.37	0.9	3500	1.65	1621	**BF70G20-../DPE08LA4**	217	16100	47700
0.37	0.8	3950	1.45	1912	**BF70G20-../DPE08LA4**	217	16100	47700
0.37	0.6	5400	1.05	2448	**BF70G20-../DPE08LA4**	217	16100	47700
0.37	0.6	4300	2.4	2422	**BF80G40-../DPE08LA4**	341	39600	75000
0.37	0.55	4400	2.4	2785	**BF80G40-../DPE08LA4**	341	39600	75000
0.37	0.47	5400	1.95	3092	**BF80G40-../DPE08LA4**	341	39600	75000
0.37	0.42	6200	1.7	3461	**BF80G40-../DPE08LA4**	341	39600	75000
0.37	0.38	7000	1.5	3843	**BF80G40-../DPE08LA4**	341	39600	75000
0.37	0.33	8400	1.25	4411	**BF80G40-../DPE08LA4**	341	39600	75000
0.37	0.3	9400	1.1	4895	**BF80G40-../DPE08LA4**	341	39600	75000
0.37	0.4	6300	2.9	3644	**BF90G50-../DPE08LA4**	612	42800	120000
0.37	0.34	7800	2.4	4366	**BF90G50-../DPE08LA4**	612	42800	120000
0.37	0.3	9200	2.0	4839	**BF90G50-../DPE08LA4**	612	42800	120000
0.37	0.25	11600	1.6	5888	**BF90G50-../DPE08LA4**	612	42800	120000
0.37	0.23	12800	1.45	6529	**BF90G50-../DPE08LA4**	612	42800	120000
0.37	0.2	15100	1.25	7533	**BF90G50-../DPE08LA4**	612	42800	120000
0.37	0.18	17100	1.1	8350	**BF90G50-../DPE08LA4**	612	42800	120000

0.55 kW

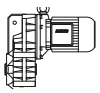

P_N	50 Hz			i	Type	m		
	n_2	M_2	f_B					
[kW]	[1/min]	[Nm]	[—]	[:1]		[kg]	[N]	[N]
0.55	250	21	3.0	5.72	**BF06-../DPE08XA4**	18	1600	-
0.55	187	28	2.4	7.66	**BF06-../DPE08XA4**	18	1800	-
0.55	156	33.5	2.1	9.21	**BF06-../DPE08XA4**	18	1900	-
0.55	119	44	1.7	12.07	**BF06-../DPE08XA4**	18	2000	-
0.55	101	52	1.65	14.21	**BF06-../DPE08XA4**	18	2100	-
0.55	85	61	1.55	16.99	**BF06-../DPE08XA4**	18	2500	-
0.55	71	73	1.3	20.42	**BF06-../DPE08XA4**	18	2700	-
0.55	54	97	0.98	26.76	**BF06-../DPE08XA4**	18	3000	-
0.55	45.5	115	0.83	31.50	**BF06-../DPE08XA4**	18	3200	-
0.55	72	72	3.3	20.05	**BF10-../DPE08XA4**	30	3000	-
0.55	62	84	2.9	23.28	**BF10-../DPE08XA4**	30	3200	-
0.55	56	93	2.6	25.60	**BF10-../DPE08XA4**	30	3350	-
0.55	51	102	2.4	28.47	**BF10-../DPE08XA4**	30	3450	-

The torques marked (*) are maximum permissible torques for service factor f_B=1,0.

0.55 kW

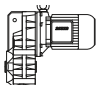

P_N	50 Hz			i	Type	m		
	n_2	M_2	f_B					
[kW]	[1/min]	[Nm]	[—]	[:1]		[kg]	[N]	[N]
0.55	46	114	2.1	31.31	**BF10-../DPE08XA4**	30	3600	-
0.55	40	131	1.85	36.15	**BF10-../DPE08XA4**	30	3800	-
0.55	36	145	1.65	39.75	**BF10-../DPE08XA4**	30	3950	-
0.55	33.5	156	1.55	43.06	**BF10-../DPE08XA4**	30	4100	-
0.55	30.5	172	1.4	47.35	**BF10-../DPE08XA4**	30	4250	-
0.55	28	187	1.3	51.28	**BF10-../DPE08XA4**	30	4400	-
0.55	25.5	205	1.15	56.39	**BF10-../DPE08XA4**	30	4550	-
0.55	23.5	220	1.1	61.55	**BF10-../DPE08XA4**	30	4700	-
0.55	21.5	240	1.0	67.69	**BF10-../DPE08XA4**	30	4900	-
0.55	18.5	280	0.86	77.55	**BF10-../DPE08XA4**	30	5100	-
0.55	40	131	3.2	35.85	**BF20-../DPE08XA4**	36	4650	-
0.55	34.5	152	2.8	41.72	**BF20-../DPE08XA4**	36	4950	-
0.55	31.5	166	2.5	45.90	**BF20-../DPE08XA4**	36	5100	-
0.55	29.5	178	2.4	48.56	**BF20-../DPE08XA4**	36	5200	-
0.55	27	194	2.2	53.43	**BF20-../DPE08XA4**	36	5500	-
0.55	25	210	2.0	58.24	**BF20-../DPE08XA4**	36	5600	-
0.55	22.5	230	1.85	64.08	**BF20-../DPE08XA4**	36	5900	-
0.55	21	250	1.7	69.70	**BF20-../DPE08XA4**	36	6100	-
0.55	19	275	1.55	76.69	**BF20-../DPE08XA4**	36	6300	-
0.55	16.5	315	1.35	87.31	**BF20-../DPE08XA4**	36	6600	-
0.55	14.5	360	1.15	100.2	**BF20-../DPE08XA4**	36	7000	-
0.55	13	400	1.05	110.2	**BF20-../DPE08XA4**	36	7300	-
0.55	12	435	0.97	123.5	**BF20-../DPE08XA4**	36	7600	-
0.55	11	475	0.88	135.9	**BF20-../DPE08XA4**	36	7900	-
0.55	10.5	500	0.84	141.2	**BF20Z-../DPE08XA4**	38	7900	-
0.55	27.5	191	3.0	52.20	**BF30-../DPE08XA4**	46	5000	-
0.55	25	210	2.7	57.41	**BF30-../DPE08XA4**	46	5200	-
0.55	23.5	220	2.6	61.17	**BF30-../DPE08XA4**	46	5300	-
0.55	21.5	240	2.4	67.28	**BF30-../DPE08XA4**	46	5500	-
0.55	20	260	2.2	72.13	**BF30-../DPE08XA4**	46	5700	-
0.55	18.5	280	2.1	79.34	**BF30-../DPE08XA4**	46	5900	-
0.55	16.5	315	1.85	87.08	**BF30-../DPE08XA4**	46	6200	-
0.55	15	350	1.65	95.79	**BF30-../DPE08XA4**	46	6400	-
0.55	13.5	385	1.5	107.6	**BF30-../DPE08XA4**	46	6700	-
0.55	12.5	420	1.35	118.3	**BF30-../DPE08XA4**	46	7000	-
0.55	11.5	455	1.25	124.7	**BF30-../DPE08XA4**	46	7100	-
0.55	10.5	500	1.15	137.1	**BF30-../DPE08XA4**	46	7400	-
0.55	9.5	550	1.05	150.7	**BF30Z-../DPE08XA4**	48	7400	-
0.55	8.7	600	0.96	165.8	**BF30Z-../DPE08XA4**	48	7400	-
0.55	8.1	640	0.9	176.6	**BF30Z-../DPE08XA4**	48	7400	-
0.55	7.4	700	0.82	194.3	**BF30Z-../DPE08XA4**	48	7400	-
0.55	18.5	280	3.2	78.55	**BF40-../DPE08XA4**	55	8500	-
0.55	17.5	300	3.0	83.91	**BF40-../DPE08XA4**	55	8700	-
0.55	15.5	335	2.7	92.31	**BF40-../DPE08XA4**	55	9100	-
0.55	14.5	360	2.5	101.0	**BF40-../DPE08XA4**	55	9400	-
0.55	13	400	2.3	111.1	**BF40-../DPE08XA4**	55	9800	-
0.55	11.5	455	2.0	124.5	**BF40-../DPE08XA4**	55	10200	-
0.55	10.5	500	1.8	137.0	**BF40-../DPE08XA4**	55	10600	-
0.55	9.2	570	1.6	155.6	**BF40Z-../DPE08XA4**	59	10600	-
0.55	8.4	620	1.45	171.2	**BF40Z-../DPE08XA4**	59	10600	-
0.55	7.6	690	1.3	188.3	**BF40Z-../DPE08XA4**	59	10600	-
0.55	7.1	730	1.25	202.2	**BF40Z-../DPE08XA4**	59	10600	-
0.55	6.5	800	1.15	222.4	**BF40Z-../DPE08XA4**	59	10600	-
0.55	5.7	920	0.98	253.2	**BF40Z-../DPE08XA4**	59	10600	-
0.55	5.2	1010	0.89	278.5	**BF40Z-../DPE08XA4**	59	10600	-
0.55	4.9	1070	0.84	295.1	**BF40Z-../DPE08XA4**	59	10600	-
0.55	13	400	3.3	114.0	**BF50-../DPE08XA4**	84	12900	-
0.55	11.5	455	2.9	127.5	**BF50-../DPE08XA4**	84	13600	-
0.55	10.5	500	2.6	138.1	**BF50Z-../DPE08XA4**	88	13600	-
0.55	9.3	560	2.3	154.5	**BF50Z-../DPE08XA4**	88	13600	-
0.55	7.8	670	1.95	183.5	**BF50Z-../DPE08XA4**	88	13600	-
0.55	7.0	750	1.75	205.2	**BF50Z-../DPE08XA4**	88	13600	-
0.55	5.8	900	1.45	247.5	**BF50Z-../DPE08XA4**	88	13600	-
0.55	5.2	1010	1.3	276.8	**BF50Z-../DPE08XA4**	88	13600	-
0.55	4.6	1140	1.15	316.6	**BF50Z-../DPE08XA4**	88	13600	-

The torques marked (*) are maximum permissible torques for service factor f_B=1,0.

0.55 kW

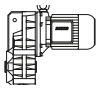

P_N	50 Hz			i	Type	m		
	n_2	M_2	f_B					
[kW]	[1/min]	[Nm]	[—]	[:1]		[kg]	[N]	[N]
0.55	4.1	1280	1.0	354.0	**BF50Z-../DPE08XA4**	88	13600	-
0.55	3.7	1410	0.92	392.8	**BF50Z-../DPE08XA4**	88	13600	-
0.55	3.3	1590	0.82	439.3	**BF50Z-../DPE08XA4**	88	13600	-
0.55	6.5	800	2.9	221.4	**BF60Z-../DPE08XA4**	132	15300	43300
0.55	5.9	890	2.6	245.6	**BF60Z-../DPE08XA4**	132	15300	43300
0.55	4.9	1070	2.1	293.4	**BF60Z-../DPE08XA4**	132	15300	43300
0.55	4.4	1190	1.95	325.6	**BF60Z-../DPE08XA4**	132	15300	43300
0.55	3.8	1380	1.65	380.0	**BF60Z-../DPE08XA4**	132	15300	43300
0.55	3.4	1540	1.5	421.6	**BF60Z-../DPE08XA4**	132	15300	43300
0.55	3.2	1640	1.4	459.9	**BF60Z-../DPE08XA4**	132	15300	43300
0.55	2.9	1810	1.25	510.3	**BF60Z-../DPE08XA4**	132	15300	43300
0.55	2.6	1780	1.4	569.3	**BF60G20-../DPE08XA4**	140	15300	43300
0.55	2.1	2200	1.15	689.0	**BF60G20-../DPE08XA4**	140	15300	43300
0.55	1.8	2600	0.96	813.2	**BF60G20-../DPE08XA4**	140	15300	43300
0.55	1.6	3000	0.83	937.6	**BF60G20-../DPE08XA4**	140	15300	43300
0.55	3.3	1590	3.3	439.2	**BF70Z-../DPE08XA4**	220	16100	47700
0.55	2.8	1870	2.8	512.4	**BF70Z-../DPE08XA4**	220	16100	47700
0.55	2.5	1850	3.1	577.5	**BF70G20-../DPE08XA4**	218	16100	47700
0.55	2.2	2100	2.7	673.6	**BF70G20-../DPE08XA4**	218	16100	47700
0.55	1.7	2800	2.0	872.1	**BF70G20-../DPE08XA4**	218	16100	47700
0.55	1.5	3200	1.8	1017	**BF70G20-../DPE08XA4**	218	16100	47700
0.55	1.1	4400	1.3	1390	**BF70G20-../DPE08XA4**	218	16100	47700
0.55	0.9	5400	1.05	1621	**BF70G20-../DPE08XA4**	218	16100	47700
0.55	1.5	3500	3.0	990.4	**BF80Z-../DPE08XA4**	337	39600	75000
0.55	1.3	4000	2.6	1124	**BF80Z-../DPE08XA4**	337	39600	75000
0.55	1.1	3300	3.2	1329	**BF80G40-../DPE08XA4**	342	39600	75000
0.55	1.0	3850	2.7	1491	**BF80G40-../DPE08XA4**	342	39600	75000
0.55	0.85	4550	2.3	1693	**BF80G40-../DPE08XA4**	342	39600	75000
0.55	0.7	5900	1.8	2051	**BF80G40-../DPE08XA4**	342	39600	75000
0.55	0.6	7100	1.5	2422	**BF80G40-../DPE08XA4**	342	39600	75000
0.55	0.55	7500	1.4	2785	**BF80G40-../DPE08XA4**	342	39600	75000
0.55	0.47	9000	1.15	3092	**BF80G40-../DPE08XA4**	342	39600	75000
0.55	0.42	10200	1.05	3461	**BF80G40-../DPE08XA4**	342	39600	75000
0.55	0.55	7100	2.6	2656	**BF90G50-../DPE08XA4**	613	42800	120000
0.55	0.49	8400	2.2	2952	**BF90G50-../DPE08XA4**	613	42800	120000
0.55	0.44	9400	1.95	3286	**BF90G50-../DPE08XA4**	613	42800	120000
0.55	0.4	10600	1.75	3644	**BF90G50-../DPE08XA4**	613	42800	120000
0.55	0.33	13400	1.4	4366	**BF90G50-../DPE08XA4**	613	42800	120000
0.55	0.3	15000	1.25	4839	**BF90G50-../DPE08XA4**	613	42800	120000

0.75 kW

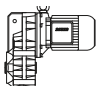

P_N	50 Hz			i	Type	m		
	n_2	M_2	f_B					
[kW]	[1/min]	[Nm]	[—]	[:1]		[kg]	[N]	[N]
0.75	250	28.5	2.2	5.72	**BF06-../DPE08XB4**	18	1600	-
0.75	187	38	1.8	7.66	**BF06-../DPE08XB4**	18	1800	-
0.75	155	46	1.5	9.21	**BF06-../DPE08XB4**	18	1900	-
0.75	119	60	1.25	12.07	**BF06-../DPE08XB4**	18	2000	-
0.75	101	70	1.2	14.21	**BF06-../DPE08XB4**	18	2100	-
0.75	84	85	1.1	16.99	**BF06-../DPE08XB4**	18	2500	-
0.75	70	102	0.93	20.42	**BF06-../DPE08XB4**	18	2700	-
0.75	121	59	3.1	11.84	**BF10-../DPE08XB4**	30	2500	-
0.75	95	75	2.4	15.04	**BF10-../DPE08XB4**	30	2800	-
0.75	79	90	2.7	18.23	**BF10-../DPE08XB4**	30	2900	-
0.75	72	99	2.4	20.05	**BF10-../DPE08XB4**	30	3000	-
0.75	62	115	2.1	23.28	**BF10-../DPE08XB4**	30	3200	-
0.75	56	127	1.9	25.60	**BF10-../DPE08XB4**	30	3350	-
0.75	51	140	1.7	28.47	**BF10-../DPE08XB4**	30	3450	-
0.75	46	155	1.55	31.31	**BF10-../DPE08XB4**	30	3600	-
0.75	39.5	181	1.35	36.15	**BF10-../DPE08XB4**	30	3800	-

The torques marked (*) are maximum permissible torques for service factor f_B=1,0.

0.75 kW

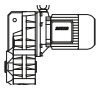

P_N	50 Hz			i	Type	m		
	n_2	M_2	f_B					
[kW]	[1/min]	[Nm]	[—]	[:1]		[kg]	[N]	[N]
0.75	36	198	1.2	39.75	**BF10-../DPE08XB4**	30	3950	-
0.75	33.5	210	1.15	43.06	**BF10-../DPE08XB4**	30	4100	-
0.75	30.5	230	1.05	47.35	**BF10-../DPE08XB4**	30	4250	-
0.75	28	255	0.94	51.28	**BF10-../DPE08XB4**	30	4400	-
0.75	25.5	280	0.86	56.39	**BF10-../DPE08XB4**	30	4550	-
0.75	23.5	300	0.8	61.55	**BF10-../DPE08XB4**	30	4700	-
0.75	59	121	3.3	24.25	**BF20-../DPE08XB4**	36	3950	-
0.75	52	137	3.1	27.62	**BF20-../DPE08XB4**	36	4150	-
0.75	47	152	2.8	30.40	**BF20-../DPE08XB4**	36	4400	-
0.75	44	162	2.6	32.58	**BF20-../DPE08XB4**	36	4450	-
0.75	40	179	2.3	35.85	**BF20-../DPE08XB4**	36	4650	-
0.75	34.5	205	2.0	41.72	**BF20-../DPE08XB4**	36	4950	-
0.75	31.5	225	1.85	45.90	**BF20-../DPE08XB4**	36	5100	-
0.75	29.5	240	1.75	48.56	**BF20-../DPE08XB4**	36	5200	-
0.75	27	265	1.6	53.43	**BF20-../DPE08XB4**	36	5500	-
0.75	24.5	290	1.45	58.24	**BF20-../DPE08XB4**	36	5600	-
0.75	22.5	315	1.35	64.08	**BF20-../DPE08XB4**	36	5900	-
0.75	20.5	345	1.2	69.70	**BF20-../DPE08XB4**	36	6100	-
0.75	19	375	1.1	76.69	**BF20-../DPE08XB4**	36	6300	-
0.75	16.5	430	0.98	87.31	**BF20-../DPE08XB4**	36	6600	-
0.75	14.5	490	0.86	100.2	**BF20-../DPE08XB4**	36	7000	-
0.75	41	174	3.3	35.00	**BF30-../DPE08XB4**	46	4200	-
0.75	37.5	191	3.0	38.49	**BF30-../DPE08XB4**	46	4400	-
0.75	35	200	2.9	41.01	**BF30-../DPE08XB4**	46	4500	-
0.75	32	220	2.6	45.10	**BF30-../DPE08XB4**	46	4700	-
0.75	27.5	260	2.2	52.20	**BF30-../DPE08XB4**	46	5000	-
0.75	25	285	2.0	57.41	**BF30-../DPE08XB4**	46	5200	-
0.75	23.5	300	1.9	61.17	**BF30-../DPE08XB4**	46	5300	-
0.75	21.5	330	1.75	67.28	**BF30-../DPE08XB4**	46	5500	-
0.75	20	355	1.6	72.13	**BF30-../DPE08XB4**	46	5700	-
0.75	18	395	1.45	79.34	**BF30-../DPE08XB4**	46	5900	-
0.75	16.5	430	1.35	87.08	**BF30-../DPE08XB4**	46	6200	-
0.75	15	475	1.2	95.79	**BF30-../DPE08XB4**	46	6400	-
0.75	13.5	530	1.1	107.6	**BF30-../DPE08XB4**	46	6700	-
0.75	12.5	570	1.0	118.3	**BF30-../DPE08XB4**	46	7000	-
0.75	11.5	620	0.93	124.7	**BF30-../DPE08XB4**	46	7100	-
0.75	10.5	680	0.85	137.1	**BF30-../DPE08XB4**	46	7400	-
0.75	26.5	270	3.3	53.82	**BF40-../DPE08XB4**	56	7200	-
0.75	23.5	300	3.0	61.25	**BF40-../DPE08XB4**	56	7600	-
0.75	21.5	330	2.7	67.38	**BF40-../DPE08XB4**	56	8000	-
0.75	20	355	2.5	71.40	**BF40-../DPE08XB4**	56	8100	-
0.75	18.5	385	2.3	78.55	**BF40-../DPE08XB4**	56	8500	-
0.75	17	420	2.1	83.91	**BF40-../DPE08XB4**	56	8700	-
0.75	15.5	460	1.95	92.31	**BF40-../DPE08XB4**	56	9100	-
0.75	14.5	490	1.85	101.0	**BF40-../DPE08XB4**	56	9400	-
0.75	13	550	1.65	111.1	**BF40-../DPE08XB4**	56	9800	-
0.75	11.5	620	1.45	124.5	**BF40-../DPE08XB4**	56	10200	-
0.75	10.5	680	1.3	137.0	**BF40-../DPE08XB4**	56	10600	-
0.75	9.2	770	1.15	155.6	**BF40Z-../DPE08XB4**	59	10600	-
0.75	8.4	850	1.05	171.2	**BF40Z-../DPE08XB4**	59	10600	-
0.75	7.6	940	0.96	188.3	**BF40Z-../DPE08XB4**	59	10600	-
0.75	7.1	1000	0.9	202.2	**BF40Z-../DPE08XB4**	59	10600	-
0.75	6.5	1100	0.82	222.4	**BF40Z-../DPE08XB4**	59	10600	-
0.75	18	395	3.3	81.33	**BF50-../DPE08XB4**	84	11300	-
0.75	16	445	2.9	90.24	**BF50-../DPE08XB4**	84	11800	-
0.75	14.5	490	2.7	100.9	**BF50-../DPE08XB4**	84	12300	-
0.75	12.5	570	2.3	114.0	**BF50-../DPE08XB4**	84	12900	-
0.75	11.5	620	2.1	127.5	**BF50-../DPE08XB4**	84	13600	-
0.75	10.5	680	1.9	138.1	**BF50Z-../DPE08XB4**	89	13600	-
0.75	9.3	770	1.7	154.5	**BF50Z-../DPE08XB4**	89	13600	-
0.75	7.8	910	1.45	183.5	**BF50Z-../DPE08XB4**	89	13600	-
0.75	7.0	1020	1.25	205.2	**BF50Z-../DPE08XB4**	89	13600	-
0.75	5.8	1230	1.05	247.5	**BF50Z-../DPE08XB4**	89	13600	-
0.75	5.2	1370	0.95	276.8	**BF50Z-../DPE08XB4**	89	13600	-
0.75	4.6	1550	0.84	316.6	**BF50Z-../DPE08XB4**	89	13600	-

The torques marked (*) are maximum permissible torques for service factor f_B=1,0.

0.75 kW

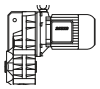

P_N	50 Hz			i	Type	m		
	n_2	M_2	f_B					
[kW]	[1/min]	[Nm]	[—]	[:1]		[kg]	[N]	[N]
0.75	8.5	840	2.7	169.2	**BF60Z-../DPE08XB4**	133	15300	43300
0.75	7.6	940	2.4	187.7	**BF60Z-../DPE08XB4**	133	15300	43300
0.75	6.5	1100	2.1	221.4	**BF60Z-../DPE08XB4**	133	15300	43300
0.75	5.9	1210	1.9	245.6	**BF60Z-../DPE08XB4**	133	15300	43300
0.75	4.9	1460	1.6	293.4	**BF60Z-../DPE08XB4**	133	15300	43300
0.75	4.4	1620	1.4	325.6	**BF60Z-../DPE08XB4**	133	15300	43300
0.75	3.8	1880	1.2	380.0	**BF60Z-../DPE08XB4**	133	15300	43300
0.75	3.4	2100	1.1	421.6	**BF60Z-../DPE08XB4**	133	15300	43300
0.75	3.1	2300	1.0	459.9	**BF60Z-../DPE08XB4**	133	15300	43300
0.75	2.8	2550	0.9	510.3	**BF60Z-../DPE08XB4**	133	15300	43300
0.75	2.6	2500	1.0	569.3	**BF60G20-../DPE08XB4**	140	15300	43300
0.75	2.1	3100	0.81	689.0	**BF60G20-../DPE08XB4**	140	15300	43300
0.75	4.2	1700	3.1	341.7	**BF70Z-../DPE08XB4**	221	16100	47700
0.75	3.6	1980	2.6	398.7	**BF70Z-../DPE08XB4**	221	16100	47700
0.75	3.3	2150	2.4	439.2	**BF70Z-../DPE08XB4**	221	16100	47700
0.75	2.8	2550	2.0	512.4	**BF70Z-../DPE08XB4**	221	16100	47700
0.75	2.5	2600	2.2	577.5	**BF70G20-../DPE08XB4**	219	16100	47700
0.75	2.2	2950	1.95	673.6	**BF70G20-../DPE08XB4**	219	16100	47700
0.75	1.7	3950	1.45	872.1	**BF70G20-../DPE08XB4**	219	16100	47700
0.75	1.5	4450	1.3	1017	**BF70G20-../DPE08XB4**	219	16100	47700
0.75	1.1	6100	0.93	1390	**BF70G20-../DPE08XB4**	219	16100	47700
0.75	2.2	3250	3.2	662.1	**BF80Z-../DPE08XB4**	338	39600	75000
0.75	1.9	3750	2.8	770.6	**BF80Z-../DPE08XB4**	338	39600	75000
0.75	1.7	4200	2.5	874.6	**BF80Z-../DPE08XB4**	338	39600	75000
0.75	1.5	4750	2.2	990.4	**BF80Z-../DPE08XB4**	338	39600	75000
0.75	1.3	5500	1.9	1124	**BF80Z-../DPE08XB4**	338	39600	75000
0.75	1.1	5000	2.1	1329	**BF80G40-../DPE08XB4**	343	39600	75000
0.75	1.0	5700	1.85	1491	**BF80G40-../DPE08XB4**	343	39600	75000
0.75	0.85	6800	1.55	1693	**BF80G40-../DPE08XB4**	343	39600	75000
0.75	0.7	8600	1.2	2051	**BF80G40-../DPE08XB4**	343	39600	75000
0.75	0.6	10300	1.0	2422	**BF80G40-../DPE08XB4**	343	39600	75000
0.75	1.0	5700	3.2	1444	**BF90G50-../DPE08XB4**	614	42800	120000
0.75	0.85	6800	2.7	1678	**BF90G50-../DPE08XB4**	614	42800	120000
0.75	0.8	7100	2.6	1867	**BF90G50-../DPE08XB4**	614	42800	120000
0.75	0.7	8100	2.3	2154	**BF90G50-../DPE08XB4**	614	42800	120000
0.75	0.55	10600	1.75	2656	**BF90G50-../DPE08XB4**	614	42800	120000
0.75	0.49	12300	1.5	2952	**BF90G50-../DPE08XB4**	614	42800	120000
0.75	0.44	13700	1.35	3286	**BF90G50-../DPE08XB4**	614	42800	120000
0.75	0.4	15400	1.2	3644	**BF90G50-../DPE08XB4**	614	42800	120000

1.1 kW

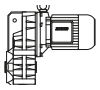

P_N	50 Hz			i	Type	m		
	n_2	M_2	f_B					
[kW]	[1/min]	[Nm]	[—]	[:1]		[kg]	[N]	[N]
1.1	260	40	3.5	5.60	**BF10-../DPE09XA4**	40	1950	-
1.1	190	55	2.8	7.58	**BF10-../DPE09XA4**	40	2200	-
1.1	149	70	2.5	9.69	**BF10-../DPE09XA4**	40	2350	-
1.1	122	86	2.1	11.84	**BF10-../DPE09XA4**	40	2500	-
1.1	96	109	1.7	15.04	**BF10-../DPE09XA4**	40	2800	-
1.1	79	132	1.8	18.23	**BF10-../DPE09XA4**	40	2900	-
1.1	72	145	1.65	20.05	**BF10-../DPE09XA4**	40	3000	-
1.1	62	169	1.4	23.28	**BF10-../DPE09XA4**	40	3200	-
1.1	57	184	1.3	25.60	**BF10-../DPE09XA4**	40	3350	-
1.1	51	205	1.15	28.47	**BF10-../DPE09XA4**	40	3450	-
1.1	46	225	1.05	31.31	**BF10-../DPE09XA4**	40	3600	-
1.1	40	260	0.92	36.15	**BF10-../DPE09XA4**	40	3800	-
1.1	36.5	285	0.84	39.75	**BF10-../DPE09XA4**	40	3950	-
1.1	110	95	3.0	13.18	**BF20-../DPE09XA4**	46	3300	-
1.1	93	112	2.8	15.54	**BF20-../DPE09XA4**	46	3450	-
1.1	86	122	3.0	16.77	**BF20-../DPE09XA4**	46	3500	-
1.1	79	132	2.8	18.45	**BF20-../DPE09XA4**	46	3600	-

The torques marked (*) are maximum permissible torques for service factor f_B=1,0.

1.1 kW

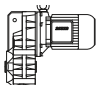

P_N	50 Hz			i	Type	m		
	n_2	M_2	f_B					
[kW]	[1/min]	[Nm]	[—]	[:1]		[kg]	[N]	[N]
1.1	66	159	2.5	22.04	**BF20-../DPE09XA4**	46	3800	-
1.1	60	175	2.3	24.25	**BF20-../DPE09XA4**	46	3950	-
1.1	53	198	2.1	27.62	**BF20-../DPE09XA4**	46	4150	-
1.1	47.5	220	1.9	30.40	**BF20-../DPE09XA4**	46	4400	-
1.1	44.5	235	1.8	32.58	**BF20-../DPE09XA4**	46	4450	-
1.1	40.5	255	1.65	35.85	**BF20-../DPE09XA4**	46	4650	-
1.1	35	300	1.4	41.72	**BF20-../DPE09XA4**	46	4950	-
1.1	31.5	330	1.25	45.90	**BF20-../DPE09XA4**	46	5100	-
1.1	30	350	1.2	48.56	**BF20-../DPE09XA4**	46	5200	-
1.1	27	385	1.1	53.43	**BF20-../DPE09XA4**	46	5500	-
1.1	25	420	1.0	58.24	**BF20-../DPE09XA4**	46	5600	-
1.1	22.5	465	0.9	64.08	**BF20-../DPE09XA4**	46	5900	-
1.1	21	500	0.84	69.70	**BF20-../DPE09XA4**	46	6100	-
1.1	66	159	3.3	21.85	**BF30-../DPE09XA4**	57	3500	-
1.1	60	175	3.2	24.03	**BF30-../DPE09XA4**	57	3600	-
1.1	52	200	2.9	28.23	**BF30-../DPE09XA4**	57	3800	-
1.1	46.5	225	2.6	31.05	**BF30-../DPE09XA4**	57	4000	-
1.1	41.5	250	2.3	35.00	**BF30-../DPE09XA4**	57	4200	-
1.1	37.5	280	2.1	38.49	**BF30-../DPE09XA4**	57	4400	-
1.1	35.5	295	1.95	41.01	**BF30-../DPE09XA4**	57	4500	-
1.1	32	325	1.75	45.10	**BF30-../DPE09XA4**	57	4700	-
1.1	28	375	1.55	52.20	**BF30-../DPE09XA4**	57	5000	-
1.1	25.5	410	1.4	57.41	**BF30-../DPE09XA4**	57	5200	-
1.1	24	435	1.3	61.17	**BF30-../DPE09XA4**	57	5300	-
1.1	21.5	485	1.2	67.28	**BF30-../DPE09XA4**	57	5500	-
1.1	20	520	1.1	72.13	**BF30-../DPE09XA4**	57	5700	-
1.1	18.5	560	1.05	79.34	**BF30-../DPE09XA4**	57	5900	-
1.1	17	610	0.94	87.08	**BF30-../DPE09XA4**	57	6200	-
1.1	15.5	670	0.86	95.79	**BF30-../DPE09XA4**	57	6400	-
1.1	38.5	270	3.3	37.64	**BF40-../DPE09XA4**	66	6200	-
1.1	35	300	3.0	41.42	**BF40-../DPE09XA4**	66	6500	-
1.1	32	325	2.8	45.56	**BF40-../DPE09XA4**	66	6800	-
1.1	29.5	355	2.5	48.92	**BF40-../DPE09XA4**	66	7000	-
1.1	27	385	2.3	53.82	**BF40-../DPE09XA4**	66	7200	-
1.1	24	435	2.1	61.25	**BF40-../DPE09XA4**	66	7600	-
1.1	21.5	485	1.85	67.38	**BF40-../DPE09XA4**	66	8000	-
1.1	20.5	510	1.75	71.40	**BF40-../DPE09XA4**	66	8100	-
1.1	18.5	560	1.6	78.55	**BF40-../DPE09XA4**	66	8500	-
1.1	17.5	600	1.5	83.91	**BF40-../DPE09XA4**	66	8700	-
1.1	16	650	1.4	92.31	**BF40-../DPE09XA4**	66	9100	-
1.1	14.5	720	1.25	101.0	**BF40-../DPE09XA4**	66	9400	-
1.1	13	800	1.15	111.1	**BF40-../DPE09XA4**	66	9800	-
1.1	12	870	1.05	124.5	**BF40-../DPE09XA4**	66	10200	-
1.1	11	950	0.95	137.0	**BF40-../DPE09XA4**	66	10600	-
1.1	10.5	1000	0.9	141.4	**BF40Z-../DPE09XA4**	70	10600	-
1.1	9.3	1120	0.8	155.6	**BF40Z-../DPE09XA4**	70	10600	-
1.1	25.5	410	3.2	56.86	**BF50-../DPE09XA4**	94	9300	-
1.1	23	455	2.9	63.59	**BF50-../DPE09XA4**	94	9800	-
1.1	20	520	2.5	72.72	**BF50-../DPE09XA4**	94	10700	-
1.1	18	580	2.2	81.33	**BF50-../DPE09XA4**	94	11300	-
1.1	16	650	2.0	90.24	**BF50-../DPE09XA4**	94	11800	-
1.1	14.5	720	1.8	100.9	**BF50-../DPE09XA4**	94	12300	-
1.1	13	800	1.65	114.0	**BF50-../DPE09XA4**	94	12900	-
1.1	11.5	910	1.45	127.5	**BF50-../DPE09XA4**	94	13600	-
1.1	10.5	1000	1.3	138.1	**BF50Z-../DPE09XA4**	99	13600	-
1.1	9.4	1110	1.15	154.5	**BF50Z-../DPE09XA4**	99	13600	-
1.1	7.9	1320	0.98	183.5	**BF50Z-../DPE09XA4**	99	13600	-
1.1	7.1	1470	0.88	205.2	**BF50Z-../DPE09XA4**	99	13600	-
1.1	14	750	3.1	103.7	**BF60-../DPE09XA4**	124	14100	39900
1.1	13	800	2.9	113.1	**BF60-../DPE09XA4**	124	14600	41300
1.1	11.5	910	2.5	125.5	**BF60-../DPE09XA4**	124	15300	43300
1.1	10.5	1000	2.3	140.8	**BF60Z-../DPE09XA4**	143	15300	43300
1.1	8.6	1220	1.9	169.2	**BF60Z-../DPE09XA4**	143	15300	43300
1.1	7.7	1360	1.7	187.7	**BF60Z-../DPE09XA4**	143	15300	43300
1.1	6.6	1590	1.45	221.4	**BF60Z-../DPE09XA4**	143	15300	43300
1.1	5.9	1780	1.3	245.6	**BF60Z-../DPE09XA4**	143	15300	43300

The torques marked (*) are maximum permissible torques for service factor f_B=1,0.

1.1 kW

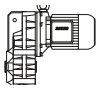

P_N	50 Hz			i	Type	m		
	n_2	M_2	f_B					
[kW]	[1/min]	[Nm]	[—]	[:1]		[kg]	[N]	[N]
1.1	5.0	2100	1.1	293.4	**BF60Z-../DPE09XA4**	143	15300	43300
1.1	4.5	2300	1.0	325.6	**BF60Z-../DPE09XA4**	143	15300	43300
1.1	3.8	2750	0.84	380.0	**BF60Z-../DPE09XA4**	143	15300	43300
1.1	6.2	1690	3.1	233.0	**BF70Z-../DPE09XA4**	231	16100	47700
1.1	5.6	1870	2.8	258.7	**BF70Z-../DPE09XA4**	231	16100	47700
1.1	4.8	2150	2.4	301.8	**BF70Z-../DPE09XA4**	231	16100	47700
1.1	4.3	2400	2.2	341.7	**BF70Z-../DPE09XA4**	231	16100	47700
1.1	3.7	2800	1.85	398.7	**BF70Z-../DPE09XA4**	231	16100	47700
1.1	3.3	3150	1.65	439.2	**BF70Z-../DPE09XA4**	231	16100	47700
1.1	2.9	3600	1.45	512.4	**BF70Z-../DPE09XA4**	231	16100	47700
1.1	2.8	3500	1.65	524.1	**BF70G20-../DPE09XA4**	229	16100	47700
1.1	2.5	3950	1.45	577.5	**BF70G20-../DPE09XA4**	229	16100	47700
1.1	2.2	4450	1.3	673.6	**BF70G20-../DPE09XA4**	229	16100	47700
1.1	1.7	5900	0.97	872.1	**BF70G20-../DPE09XA4**	229	16100	47700
1.1	1.5	6700	0.85	1017	**BF70G20-../DPE09XA4**	229	16100	47700
1.1	3.2	3250	3.2	450.4	**BF80Z-../DPE09XA4**	348	39600	75000
1.1	2.9	3600	2.9	511.2	**BF80Z-../DPE09XA4**	348	39600	75000
1.1	2.5	4200	2.5	583.4	**BF80Z-../DPE09XA4**	348	39600	75000
1.1	2.2	4750	2.2	662.1	**BF80Z-../DPE09XA4**	348	39600	75000
1.1	1.9	5500	1.9	770.6	**BF80Z-../DPE09XA4**	348	39600	75000
1.1	1.7	6100	1.7	874.6	**BF80Z-../DPE09XA4**	348	39600	75000
1.1	1.5	7000	1.5	990.4	**BF80Z-../DPE09XA4**	348	39600	75000
1.1	1.3	8000	1.3	1124	**BF80Z-../DPE09XA4**	348	39600	75000
1.1	1.1	8100	1.3	1329	**BF80G40-../DPE09XA4**	353	39600	75000
1.1	1.0	9100	1.15	1491	**BF80G40-../DPE09XA4**	353	39600	75000
1.1	0.9	10000	1.05	1693	**BF80G40-../DPE09XA4**	353	39600	75000
1.1	1.8	5800	3.2	845.1	**BF90Z-../DPE09XA4**	612	42800	120000
1.1	1.4	6100	3.0	1043	**BF90G50-../DPE09XA4**	624	42800	120000
1.1	1.2	7100	2.6	1204	**BF90G50-../DPE09XA4**	624	42800	120000
1.1	1.0	9100	2.0	1444	**BF90G50-../DPE09XA4**	624	42800	120000
1.1	0.9	10000	1.85	1678	**BF90G50-../DPE09XA4**	624	42800	120000
1.1	0.8	11300	1.65	1867	**BF90G50-../DPE09XA4**	624	42800	120000
1.1	0.7	12900	1.45	2154	**BF90G50-../DPE09XA4**	624	42800	120000
1.1	0.55	16700	1.1	2656	**BF90G50-../DPE09XA4**	624	42800	120000

1.5 kW

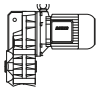

P_N	50 Hz			i	Type	m		
	n_2	M_2	f_B					
[kW]	[1/min]	[Nm]	[—]	[:1]		[kg]	[N]	[N]
1.5	260	55	2.5	5.60	**BF10-../DPE09XB4**	40	1950	-
1.5	190	75	2.0	7.58	**BF10-../DPE09XB4**	40	2200	-
1.5	149	96	1.85	9.69	**BF10-../DPE09XB4**	40	2350	-
1.5	122	117	1.55	11.84	**BF10-../DPE09XB4**	40	2500	-
1.5	96	149	1.25	15.04	**BF10-../DPE09XB4**	40	2800	-
1.5	79	181	1.35	18.23	**BF10-../DPE09XB4**	40	2900	-
1.5	72	198	1.2	20.05	**BF10-../DPE09XB4**	40	3000	-
1.5	62	230	1.05	23.28	**BF10-../DPE09XB4**	40	3200	-
1.5	57	250	0.96	25.60	**BF10-../DPE09XB4**	40	3350	-
1.5	51	280	0.86	28.47	**BF10-../DPE09XB4**	40	3450	-
1.5	180	79	2.8	8.00	**BF20-../DPE09XB4**	46	2850	-
1.5	137	104	2.5	10.51	**BF20-../DPE09XB4**	46	3100	-
1.5	109	131	2.2	13.18	**BF20-../DPE09XB4**	46	3300	-
1.5	93	154	2.0	15.54	**BF20-../DPE09XB4**	46	3450	-
1.5	86	166	2.2	16.77	**BF20-../DPE09XB4**	46	3500	-
1.5	78	183	2.0	18.45	**BF20-../DPE09XB4**	46	3600	-
1.5	66	215	1.85	22.04	**BF20-../DPE09XB4**	46	3800	-
1.5	60	235	1.7	24.25	**BF20-../DPE09XB4**	46	3950	-
1.5	52	275	1.55	27.62	**BF20-../DPE09XB4**	46	4150	-
1.5	47.5	300	1.4	30.40	**BF20-../DPE09XB4**	46	4400	-
1.5	44.5	320	1.3	32.58	**BF20-../DPE09XB4**	46	4450	-
1.5	40.5	350	1.2	35.85	**BF20-../DPE09XB4**	46	4650	-

The torques marked (*) are maximum permissible torques for service factor f_B=1,0.

1.5 kW

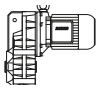

P_N	50 Hz			i	Type	m		
	n_2	M_2	f_B					
[kW]	[1/min]	[Nm]	[—]	[:1]		[kg]	[N]	[N]
1.5	34.5	415	1.0	41.72	**BF20-../DPE09XB4**	46	4950	-
1.5	31.5	450	0.93	45.90	**BF20-../DPE09XB4**	46	5100	-
1.5	30	475	0.88	48.56	**BF20-../DPE09XB4**	46	5200	-
1.5	144	99	3.2	9.99	**BF30-../DPE09XB4**	57	2850	-
1.5	112	127	2.9	12.91	**BF30-../DPE09XB4**	57	3050	-
1.5	90	159	2.6	16.00	**BF30-../DPE09XB4**	57	3250	-
1.5	82	174	2.8	17.65	**BF30-../DPE09XB4**	57	3300	-
1.5	74	193	2.6	19.41	**BF30-../DPE09XB4**	57	3400	-
1.5	66	215	2.5	21.85	**BF30-../DPE09XB4**	57	3500	-
1.5	60	235	2.4	24.03	**BF30-../DPE09XB4**	57	3600	-
1.5	51	280	2.1	28.23	**BF30-../DPE09XB4**	57	3800	-
1.5	46.5	305	1.9	31.05	**BF30-../DPE09XB4**	57	4000	-
1.5	41	345	1.65	35.00	**BF30-../DPE09XB4**	57	4200	-
1.5	37.5	380	1.5	38.49	**BF30-../DPE09XB4**	57	4400	-
1.5	35	405	1.4	41.01	**BF30-../DPE09XB4**	57	4500	-
1.5	32	445	1.3	45.10	**BF30-../DPE09XB4**	57	4700	-
1.5	27.5	520	1.1	52.20	**BF30-../DPE09XB4**	57	5000	-
1.5	25	570	1.0	57.41	**BF30-../DPE09XB4**	57	5200	-
1.5	23.5	600	0.96	61.17	**BF30-../DPE09XB4**	57	5300	-
1.5	21.5	660	0.87	67.28	**BF30-../DPE09XB4**	57	5500	-
1.5	20	710	0.81	72.13	**BF30-../DPE09XB4**	57	5700	-
1.5	67	210	3.3	21.60	**BF40-../DPE09XB4**	66	5200	-
1.5	61	230	3.2	23.77	**BF40-../DPE09XB4**	66	5400	-
1.5	54	265	2.9	26.86	**BF40-../DPE09XB4**	66	5600	-
1.5	49	290	2.8	29.55	**BF40-../DPE09XB4**	66	5800	-
1.5	42	340	2.5	34.21	**BF40-../DPE09XB4**	66	6000	-
1.5	38.5	370	2.4	37.64	**BF40-../DPE09XB4**	66	6200	-
1.5	35	405	2.2	41.42	**BF40-../DPE09XB4**	66	6500	-
1.5	31.5	450	2.0	45.56	**BF40-../DPE09XB4**	66	6800	-
1.5	29.5	485	1.85	48.92	**BF40-../DPE09XB4**	66	7000	-
1.5	27	530	1.7	53.82	**BF40-../DPE09XB4**	66	7200	-
1.5	23.5	600	1.5	61.25	**BF40-../DPE09XB4**	66	7600	-
1.5	21.5	660	1.35	67.38	**BF40-../DPE09XB4**	66	8000	-
1.5	20.5	690	1.3	71.40	**BF40-../DPE09XB4**	66	8100	-
1.5	18.5	770	1.15	78.55	**BF40-../DPE09XB4**	66	8500	-
1.5	17.5	810	1.1	83.91	**BF40-../DPE09XB4**	66	8700	-
1.5	16	890	1.0	92.31	**BF40-../DPE09XB4**	66	9100	-
1.5	14.5	980	0.92	101.0	**BF40-../DPE09XB4**	66	9400	-
1.5	13	1100	0.82	111.1	**BF40-../DPE09XB4**	66	9800	-
1.5	34.5	415	3.1	42.15	**BF50-../DPE09XB4**	94	8500	-
1.5	30.5	465	2.8	47.14	**BF50-../DPE09XB4**	94	8900	-
1.5	25.5	560	2.3	56.86	**BF50-../DPE09XB4**	94	9300	-
1.5	23	620	2.1	63.59	**BF50-../DPE09XB4**	94	9800	-
1.5	20	710	1.85	72.72	**BF50-../DPE09XB4**	94	10700	-
1.5	18	790	1.65	81.33	**BF50-../DPE09XB4**	94	11300	-
1.5	16	890	1.45	90.24	**BF50-../DPE09XB4**	94	11800	-
1.5	14.5	980	1.35	100.9	**BF50-../DPE09XB4**	94	12300	-
1.5	13	1100	1.2	114.0	**BF50-../DPE09XB4**	94	12900	-
1.5	11.5	1240	1.05	127.5	**BF50-../DPE09XB4**	94	13600	-
1.5	10.5	1360	0.96	138.1	**BF50Z-../DPE09XB4**	99	13600	-
1.5	9.3	1540	0.84	154.5	**BF50Z-../DPE09XB4**	99	13600	-
1.5	20	710	3.2	72.15	**BF60-../DPE09XB4**	124	12000	34000
1.5	18	790	2.9	80.05	**BF60-../DPE09XB4**	124	12600	35600
1.5	15.5	920	2.5	93.44	**BF60-../DPE09XB4**	124	13500	38200
1.5	14	1020	2.3	103.7	**BF60-../DPE09XB4**	124	14100	39900
1.5	13	1100	2.1	113.1	**BF60-../DPE09XB4**	124	14600	41300
1.5	11.5	1240	1.85	125.5	**BF60-../DPE09XB4**	124	15300	43300
1.5	10.5	1360	1.7	140.8	**BF60Z-../DPE09XB4**	143	15300	43300
1.5	8.5	1680	1.35	169.2	**BF60Z-../DPE09XB4**	143	15300	43300
1.5	7.7	1860	1.25	187.7	**BF60Z-../DPE09XB4**	143	15300	43300
1.5	6.5	2200	1.05	221.4	**BF60Z-../DPE09XB4**	143	15300	43300
1.5	5.9	2400	0.96	245.6	**BF60Z-../DPE09XB4**	143	15300	43300
1.5	8.0	1790	2.9	179.7	**BF70Z-../DPE09XB4**	231	16100	47700
1.5	7.2	1980	2.6	199.7	**BF70Z-../DPE09XB4**	231	16100	47700
1.5	6.2	2300	2.3	233.0	**BF70Z-../DPE09XB4**	231	16100	47700

The torques marked (*) are maximum permissible torques for service factor f_B=1,0.

1.5 kW

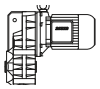

P_N	50 Hz			i	Type	m		
	n_2	M_2	f_B					
[kW]	[1/min]	[Nm]	[—]	[:1]		[kg]	[N]	[N]
1.5	5.6	2550	2.0	258.7	**BF70Z-../DPE09XB4**	231	16100	47700
1.5	4.8	2950	1.75	301.8	**BF70Z-../DPE09XB4**	231	16100	47700
1.5	4.2	3400	1.55	341.7	**BF70Z-../DPE09XB4**	231	16100	47700
1.5	3.6	3950	1.3	398.7	**BF70Z-../DPE09XB4**	231	16100	47700
1.5	3.3	4300	1.2	439.2	**BF70Z-../DPE09XB4**	231	16100	47700
1.5	2.9	4900	1.05	512.4	**BF70Z-../DPE09XB4**	231	16100	47700
1.5	2.8	4850	1.2	524.1	**BF70G20-../DPE09XB4**	229	16100	47700
1.5	2.5	5400	1.05	577.5	**BF70G20-../DPE09XB4**	229	16100	47700
1.5	2.2	6200	0.92	673.6	**BF70G20-../DPE09XB4**	229	16100	47700
1.5	4.2	3400	3.1	347.3	**BF80Z-../DPE09XB4**	348	39600	75000
1.5	3.7	3850	2.7	394.2	**BF80Z-../DPE09XB4**	348	39600	75000
1.5	3.2	4450	2.4	450.4	**BF80Z-../DPE09XB4**	348	39600	75000
1.5	2.9	4900	2.1	511.2	**BF80Z-../DPE09XB4**	348	39600	75000
1.5	2.5	5700	1.85	583.4	**BF80Z-../DPE09XB4**	348	39600	75000
1.5	2.2	6500	1.6	662.1	**BF80Z-../DPE09XB4**	348	39600	75000
1.5	1.9	7500	1.4	770.6	**BF80Z-../DPE09XB4**	348	39600	75000
1.5	1.7	8400	1.25	874.6	**BF80Z-../DPE09XB4**	348	39600	75000
1.5	1.5	9500	1.1	990.4	**BF80Z-../DPE09XB4**	348	39600	75000
1.5	1.3	11000	0.95	1124	**BF80Z-../DPE09XB4**	348	39600	75000
1.5	1.1	11500	0.91	1329	**BF80G40-../DPE09XB4**	353	39600	75000
1.5	1.0	12900	0.81	1491	**BF80G40-../DPE09XB4**	353	39600	75000
1.5	2.5	5700	3.2	591.1	**BF90Z-../DPE09XB4**	612	42800	120000
1.5	2.2	6500	2.8	658.1	**BF90Z-../DPE09XB4**	612	42800	120000
1.5	1.9	7500	2.5	759.0	**BF90Z-../DPE09XB4**	612	42800	120000
1.5	1.7	8400	2.2	845.1	**BF90Z-../DPE09XB4**	612	42800	120000
1.5	1.5	7900	2.3	976.1	**BF90G50-../DPE09XB4**	624	42800	120000
1.5	1.4	8800	2.1	1043	**BF90G50-../DPE09XB4**	624	42800	120000
1.5	1.2	10300	1.8	1204	**BF90G50-../DPE09XB4**	624	42800	120000
1.5	1.0	12900	1.45	1444	**BF90G50-../DPE09XB4**	624	42800	120000
1.5	0.9	14300	1.3	1678	**BF90G50-../DPE09XB4**	624	42800	120000
1.5	0.8	16100	1.15	1867	**BF90G50-../DPE09XB4**	624	42800	120000
1.5	0.7	18400	1.0	2154	**BF90G50-../DPE09XB4**	624	42800	120000

2.2 kW

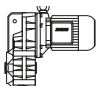

P_N	50 Hz			i	Type	m		
	n_2	M_2	f_B					
[kW]	[1/min]	[Nm]	[—]	[:1]		[kg]	[N]	[N]
2.2	260	80	1.75	5.60	**BF10-../DPE09XB4C**	40	1950	-
2.2	192	109	1.4	7.58	**BF10-../DPE09XB4C**	40	2200	-
2.2	150	140	1.25	9.69	**BF10-../DPE09XB4C**	40	2350	-
2.2	123	170	1.1	11.84	**BF10-../DPE09XB4C**	40	2500	-
2.2	97	215	0.85	15.04	**BF10-../DPE09XB4C**	40	2800	-
2.2	80	260	0.92	18.23	**BF10-../DPE09XB4C**	40	2900	-
2.2	73	285	0.84	20.05	**BF10-../DPE09XB4C**	40	3000	-
2.2	245	85	2.4	6.04	**BF20-../DPE09XB4C**	46	2550	-
2.2	182	115	1.9	8.00	**BF20-../DPE09XB4C**	46	2850	-
2.2	138	152	1.7	10.51	**BF20-../DPE09XB4C**	46	3100	-
2.2	111	189	1.5	13.18	**BF20-../DPE09XB4C**	46	3300	-
2.2	94	220	1.4	15.54	**BF20-../DPE09XB4C**	46	3450	-
2.2	87	240	1.5	16.77	**BF20-../DPE09XB4C**	46	3500	-
2.2	79	265	1.4	18.45	**BF20-../DPE09XB4C**	46	3600	-
2.2	66	315	1.25	22.04	**BF20-../DPE09XB4C**	46	3800	-
2.2	60	350	1.15	24.25	**BF20-../DPE09XB4C**	46	3950	-
2.2	53	395	1.05	27.62	**BF20-../DPE09XB4C**	46	4150	-
2.2	48	435	0.97	30.40	**BF20-../DPE09XB4C**	46	4400	-
2.2	45	465	0.9	32.58	**BF20-../DPE09XB4C**	46	4450	-
2.2	40.5	510	0.82	35.85	**BF20-../DPE09XB4C**	46	4650	-
2.2	230	91	2.9	6.34	**BF30-../DPE09XB4C**	57	2400	-
2.2	180	116	2.5	8.07	**BF30-../DPE09XB4C**	57	2650	-
2.2	146	143	2.2	9.99	**BF30-../DPE09XB4C**	57	2850	-
2.2	113	185	2.0	12.91	**BF30-../DPE09XB4C**	57	3050	-

The torques marked (*) are maximum permissible torques for service factor f_B=1,0.

2.2 kW

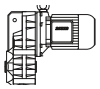

P_N	50 Hz			i	Type	m		
	n_2	M_2	f_B					
[kW]	[1/min]	[Nm]	[—]	[:1]		[kg]	[N]	[N]
2.2	91	230	1.75	16.00	**BF30-../DPE09XB4C**	57	3250	-
2.2	83	250	1.9	17.65	**BF30-../DPE09XB4C**	57	3300	-
2.2	75	280	1.8	19.41	**BF30-../DPE09XB4C**	57	3400	-
2.2	67	310	1.7	21.85	**BF30-../DPE09XB4C**	57	3500	-
2.2	61	340	1.65	24.03	**BF30-../DPE09XB4C**	57	3600	-
2.2	52	400	1.45	28.23	**BF30-../DPE09XB4C**	57	3800	-
2.2	47	445	1.3	31.05	**BF30-../DPE09XB4C**	57	4000	-
2.2	41.5	500	1.15	35.00	**BF30-../DPE09XB4C**	57	4200	-
2.2	38	550	1.05	38.49	**BF30-../DPE09XB4C**	57	4400	-
2.2	35.5	590	0.97	41.01	**BF30-../DPE09XB4C**	57	4500	-
2.2	32.5	640	0.9	45.10	**BF30-../DPE09XB4C**	57	4700	-
2.2	191	110	3.3	7.62	**BF40-../DPE09XB4C**	66	3900	-
2.2	153	137	3.0	9.48	**BF40-../DPE09XB4C**	66	4150	-
2.2	123	170	2.7	11.79	**BF40-../DPE09XB4C**	66	4450	-
2.2	97	215	2.4	15.02	**BF40-../DPE09XB4C**	66	4800	-
2.2	84	250	2.5	17.35	**BF40-../DPE09XB4C**	66	4950	-
2.2	76	275	2.4	19.09	**BF40-../DPE09XB4C**	66	5100	-
2.2	68	305	2.3	21.60	**BF40-../DPE09XB4C**	66	5200	-
2.2	62	335	2.2	23.77	**BF40-../DPE09XB4C**	66	5400	-
2.2	54	385	2.0	26.86	**BF40-../DPE09XB4C**	66	5600	-
2.2	49.5	420	1.9	29.55	**BF40-../DPE09XB4C**	66	5800	-
2.2	42.5	490	1.75	34.21	**BF40-../DPE09XB4C**	66	6000	-
2.2	39	530	1.7	37.64	**BF40-../DPE09XB4C**	66	6200	-
2.2	35.5	590	1.55	41.42	**BF40-../DPE09XB4C**	66	6500	-
2.2	32	650	1.4	45.56	**BF40-../DPE09XB4C**	66	6800	-
2.2	30	700	1.3	48.92	**BF40-../DPE09XB4C**	66	7000	-
2.2	27	770	1.15	53.82	**BF40-../DPE09XB4C**	66	7200	-
2.2	24	870	1.05	61.25	**BF40-../DPE09XB4C**	66	7600	-
2.2	22	950	0.95	67.38	**BF40-../DPE09XB4C**	66	8000	-
2.2	20.5	1020	0.88	71.40	**BF40-../DPE09XB4C**	66	8100	-
2.2	18.5	1130	0.8	78.55	**BF40-../DPE09XB4C**	66	8500	-
2.2	57	365	3.2	25.88	**BF50-../DPE09XB4C**	94	7100	-
2.2	46	455	2.8	31.73	**BF50-../DPE09XB4C**	94	7500	-
2.2	41	510	2.5	35.49	**BF50-../DPE09XB4C**	94	7800	-
2.2	34.5	600	2.2	42.15	**BF50-../DPE09XB4C**	94	8500	-
2.2	31	670	1.95	47.14	**BF50-../DPE09XB4C**	94	8900	-
2.2	26	800	1.65	56.86	**BF50-../DPE09XB4C**	94	9300	-
2.2	23	910	1.45	63.59	**BF50-../DPE09XB4C**	94	9800	-
2.2	20	1050	1.25	72.72	**BF50-../DPE09XB4C**	94	10700	-
2.2	18	1160	1.1	81.33	**BF50-../DPE09XB4C**	94	11300	-
2.2	16.5	1270	1.0	90.24	**BF50-../DPE09XB4C**	94	11800	-
2.2	14.5	1440	0.9	100.9	**BF50-../DPE09XB4C**	94	12300	-
2.2	13	1610	0.81	114.0	**BF50-../DPE09XB4C**	94	12900	-
2.2	27	770	3.0	54.44	**BF60-../DPE09XB4C**	124	10500	29700
2.2	24.5	850	2.7	60.40	**BF60-../DPE09XB4C**	124	11100	31400
2.2	20.5	1020	2.3	72.15	**BF60-../DPE09XB4C**	124	12000	34000
2.2	18.5	1130	2.0	80.05	**BF60-../DPE09XB4C**	124	12600	35600
2.2	16	1310	1.75	93.44	**BF60-../DPE09XB4C**	124	13500	38200
2.2	14	1500	1.55	103.7	**BF60-../DPE09XB4C**	124	14100	39900
2.2	13	1610	1.45	113.1	**BF60-../DPE09XB4C**	124	14600	41300
2.2	12	1750	1.3	125.5	**BF60-../DPE09XB4C**	124	15300	43300
2.2	10.5	2000	1.15	140.8	**BF60Z-../DPE09XB4C**	143	15300	43300
2.2	8.6	2400	0.96	169.2	**BF60Z-../DPE09XB4C**	143	15300	43300
2.2	7.8	2650	0.87	187.7	**BF60Z-../DPE09XB4C**	143	15300	43300
2.2	12	1750	3.0	122.7	**BF70-../DPE09XB4C**	210	16100	47700
2.2	11	1910	2.7	133.0	**BF70Z-../DPE09XB4C**	231	16100	47700
2.2	9.5	2200	2.4	154.0	**BF70Z-../DPE09XB4C**	231	16100	47700
2.2	8.1	2550	2.0	179.7	**BF70Z-../DPE09XB4C**	231	16100	47700
2.2	7.3	2850	1.8	199.7	**BF70Z-../DPE09XB4C**	231	16100	47700
2.2	6.3	3300	1.6	233.0	**BF70Z-../DPE09XB4C**	231	16100	47700
2.2	5.7	3650	1.4	258.7	**BF70Z-../DPE09XB4C**	231	16100	47700
2.2	4.9	4250	1.2	301.8	**BF70Z-../DPE09XB4C**	231	16100	47700
2.2	4.3	4850	1.05	341.7	**BF70Z-../DPE09XB4C**	231	16100	47700
2.2	3.7	5600	0.93	398.7	**BF70Z-../DPE09XB4C**	231	16100	47700
2.2	3.4	6100	0.85	439.2	**BF70Z-../DPE09XB4C**	231	16100	47700

The torques marked (*) are maximum permissible torques for service factor f_B=1,0.

2.2 kW

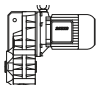

P_N	50 Hz			i	Type	m		
	n_2	M_2	f_B					
[kW]	[1/min]	[Nm]	[—]	[:1]		[kg]	[N]	[N]
2.2	7.0	3000	3.2	209.4	**BF80-../DPE09XB4C**	307	34300	75000
2.2	6.2	3350	2.8	237.1	**BF80-../DPE09XB4C**	307	36900	75000
2.2	5.4	3850	2.5	269.1	**BF80-../DPE09XB4C**	307	39600	75000
2.2	5.0	4200	2.5	291.7	**BF80Z-../DPE09XB4C**	348	39600	75000
2.2	4.2	5000	2.1	347.3	**BF80Z-../DPE09XB4C**	348	39600	75000
2.2	3.7	5600	1.9	394.2	**BF80Z-../DPE09XB4C**	348	39600	75000
2.2	3.3	6300	1.65	450.4	**BF80Z-../DPE09XB4C**	348	39600	75000
2.2	2.9	7200	1.45	511.2	**BF80Z-../DPE09XB4C**	348	39600	75000
2.2	2.5	8400	1.25	583.4	**BF80Z-../DPE09XB4C**	348	39600	75000
2.2	2.2	9500	1.1	662.1	**BF80Z-../DPE09XB4C**	348	39600	75000
2.2	1.9	11000	0.95	770.6	**BF80Z-../DPE09XB4C**	348	39600	75000
2.2	1.7	12300	0.85	874.6	**BF80Z-../DPE09XB4C**	348	39600	75000
2.2	3.2	6500	2.8	456.7	**BF90Z-../DPE09XB4C**	612	42800	120000
2.2	2.9	7200	2.6	508.5	**BF90Z-../DPE09XB4C**	612	42800	120000
2.2	2.5	8400	2.2	591.1	**BF90Z-../DPE09XB4C**	612	42800	120000
2.2	2.3	9100	2.0	658.1	**BF90Z-../DPE09XB4C**	612	42800	120000
2.2	2.0	10500	1.75	759.0	**BF90Z-../DPE09XB4C**	612	42800	120000
2.2	1.8	11600	1.6	845.1	**BF90Z-../DPE09XB4C**	612	42800	120000
2.2	1.5	12400	1.5	976.1	**BF90G50-../DPE09XB4C**	624	42800	120000
2.2	1.4	13600	1.35	1043	**BF90G50-../DPE09XB4C**	624	42800	120000
2.2	1.3	14500	1.3	1204	**BF90G50-../DPE09XB4C**	624	42800	120000
2.2	1.1	17700	1.05	1444	**BF90G50-../DPE09XB4C**	624	42800	120000

3 kW

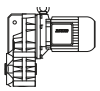

P_N	50 Hz			i	Type	m		
	n_2	M_2	f_B					
[kW]	[1/min]	[Nm]	[—]	[:1]		[kg]	[N]	[N]
3	230	124	2.1	6.34	**BF30-../DPE11LA4**	78	2400	-
3	181	158	1.8	8.07	**BF30-../DPE11LA4**	78	2650	-
3	146	196	1.65	9.99	**BF30-../DPE11LA4**	78	2850	-
3	113	250	1.45	12.91	**BF30-../DPE11LA4**	78	3050	-
3	91	310	1.3	16.00	**BF30-../DPE11LA4**	78	3250	-
3	83	345	1.4	17.65	**BF30-../DPE11LA4**	78	3300	-
3	75	380	1.3	19.41	**BF30-../DPE11LA4**	78	3400	-
3	67	425	1.25	21.85	**BF30-../DPE11LA4**	78	3500	-
3	61	465	1.2	24.03	**BF30-../DPE11LA4**	78	3600	-
3	52	550	1.05	28.23	**BF30-../DPE11LA4**	78	3800	-
3	47	600	0.96	31.05	**BF30-../DPE11LA4**	78	4000	-
3	42	680	0.85	35.00	**BF30-../DPE11LA4**	78	4200	-
3	250	114	2.9	5.87	**BF40-../DPE11LA4**	92	3550	-
3	191	150	2.5	7.62	**BF40-../DPE11LA4**	92	3900	-
3	154	186	2.2	9.48	**BF40-../DPE11LA4**	92	4150	-
3	124	230	2.0	11.79	**BF40-../DPE11LA4**	92	4450	-
3	97	295	1.75	15.02	**BF40-../DPE11LA4**	92	4800	-
3	84	340	1.85	17.35	**BF40-../DPE11LA4**	92	4950	-
3	77	370	1.8	19.09	**BF40-../DPE11LA4**	92	5100	-
3	68	420	1.65	21.60	**BF40-../DPE11LA4**	92	5200	-
3	62	460	1.6	23.77	**BF40-../DPE11LA4**	92	5400	-
3	55	520	1.5	26.86	**BF40-../DPE11LA4**	92	5600	-
3	49.5	570	1.4	29.55	**BF40-../DPE11LA4**	92	5800	-
3	43	660	1.3	34.21	**BF40-../DPE11LA4**	92	6000	-
3	39	730	1.2	37.64	**BF40-../DPE11LA4**	92	6200	-
3	35.5	800	1.15	41.42	**BF40-../DPE11LA4**	92	6500	-
3	32	890	1.0	45.56	**BF40-../DPE11LA4**	92	6800	-
3	30	950	0.95	48.92	**BF40-../DPE11LA4**	92	7000	-
3	27.5	1040	0.87	53.82	**BF40-../DPE11LA4**	92	7200	-
3	137	205	3.3	10.68	**BF50-../DPE11LA4**	122	5600	-
3	100	285	2.8	14.65	**BF50-../DPE11LA4**	122	6100	-
3	88	325	2.9	16.70	**BF50-../DPE11LA4**	122	6200	-
3	78	365	2.7	18.68	**BF50-../DPE11LA4**	122	6400	-
3	63	450	2.5	23.14	**BF50-../DPE11LA4**	122	6800	-
3	57	500	2.3	25.88	**BF50-../DPE11LA4**	122	7100	-

The torques marked (*) are maximum permissible torques for service factor f_B=1,0.

3 kW

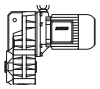

P_N	50 Hz			i	Type	m		
	n_2	M_2	f_B					
[kW]	[1/min]	[Nm]	[—]	[:1]		[kg]	[N]	[N]
3	46	620	2.0	31.73	**BF50-../DPE11LA4**	122	7500	-
3	41	690	1.9	35.49	**BF50-../DPE11LA4**	122	7800	-
3	35	810	1.6	42.15	**BF50-../DPE11LA4**	122	8500	-
3	31	920	1.4	47.14	**BF50-../DPE11LA4**	122	8900	-
3	26	1100	1.2	56.86	**BF50-../DPE11LA4**	122	9300	-
3	23	1240	1.05	63.59	**BF50-../DPE11LA4**	122	9800	-
3	20.5	1390	0.94	72.72	**BF50-../DPE11LA4**	122	10700	-
3	18	1590	0.82	81.33	**BF50-../DPE11LA4**	122	11300	-
3	47	600	3.2	31.20	**BF60-../DPE11LA4**	153	8800	24900
3	42.5	670	3.0	34.62	**BF60-../DPE11LA4**	153	9100	25700
3	35	810	2.6	41.60	**BF60-../DPE11LA4**	153	9600	27100
3	32	890	2.5	46.16	**BF60-../DPE11LA4**	153	9900	28000
3	27	1060	2.2	54.44	**BF60-../DPE11LA4**	153	10500	29700
3	24.5	1160	2.0	60.40	**BF60-../DPE11LA4**	153	11100	31400
3	20.5	1390	1.65	72.15	**BF60-../DPE11LA4**	153	12000	34000
3	18.5	1540	1.5	80.05	**BF60-../DPE11LA4**	153	12600	35600
3	16	1790	1.3	93.44	**BF60-../DPE11LA4**	153	13500	38200
3	14.5	1970	1.15	103.7	**BF60-../DPE11LA4**	153	14100	39900
3	13	2200	1.05	113.1	**BF60-../DPE11LA4**	153	14600	41300
3	12	2350	0.98	125.5	**BF60-../DPE11LA4**	153	15300	43300
3	10.5	2700	0.85	140.8	**BF60Z-../DPE11LA4**	169	15300	43300
3	18	1590	3.3	81.82	**BF70-../DPE11LA4**	232	12800	41300
3	15.5	1840	2.8	95.46	**BF70-../DPE11LA4**	232	14000	43700
3	14	2000	2.6	105.2	**BF70-../DPE11LA4**	232	14700	45100
3	12	2350	2.2	122.7	**BF70-../DPE11LA4**	232	16100	47700
3	11	2600	2.0	133.0	**BF70Z-../DPE11LA4**	258	16100	47700
3	9.5	3000	1.75	154.0	**BF70Z-../DPE11LA4**	258	16100	47700
3	8.1	3500	1.5	179.7	**BF70Z-../DPE11LA4**	258	16100	47700
3	7.3	3900	1.35	199.7	**BF70Z-../DPE11LA4**	258	16100	47700
3	6.3	4500	1.15	233.0	**BF70Z-../DPE11LA4**	258	16100	47700
3	5.7	5000	1.05	258.7	**BF70Z-../DPE11LA4**	258	16100	47700
3	4.9	5800	0.9	301.8	**BF70Z-../DPE11LA4**	258	16100	47700
3	9.2	3100	3.1	158.5	**BF80-../DPE11LA4**	328	29000	75000
3	7.9	3600	2.6	184.5	**BF80-../DPE11LA4**	328	31800	75000
3	7.0	4050	2.3	209.4	**BF80-../DPE11LA4**	328	34300	75000
3	6.2	4600	2.1	237.1	**BF80-../DPE11LA4**	328	36900	75000
3	5.5	5200	1.85	269.1	**BF80-../DPE11LA4**	328	39600	75000
3	5.0	5700	1.85	291.7	**BF80Z-../DPE11LA4**	375	39600	75000
3	4.2	6800	1.55	347.3	**BF80Z-../DPE11LA4**	375	39600	75000
3	3.7	7700	1.35	394.2	**BF80Z-../DPE11LA4**	375	39600	75000
3	3.3	8600	1.2	450.4	**BF80Z-../DPE11LA4**	375	39600	75000
3	2.9	9800	1.05	511.2	**BF80Z-../DPE11LA4**	375	39600	75000
3	2.5	11400	0.92	583.4	**BF80Z-../DPE11LA4**	375	39600	75000
3	2.2	13000	0.81	662.1	**BF80Z-../DPE11LA4**	375	39600	75000
3	4.9	5800	3.2	300.4	**BF90Z-../DPE11LA4**	641	42800	120000
3	4.3	6600	2.8	343.6	**BF90Z-../DPE11LA4**	641	42800	120000
3	3.9	7300	2.5	382.6	**BF90Z-../DPE11LA4**	641	42800	120000
3	3.2	8900	2.1	456.7	**BF90Z-../DPE11LA4**	641	42800	120000
3	2.9	9800	1.9	508.5	**BF90Z-../DPE11LA4**	641	42800	120000
3	2.5	11400	1.6	591.1	**BF90Z-../DPE11LA4**	641	42800	120000
3	2.3	12400	1.5	658.1	**BF90Z-../DPE11LA4**	641	42800	120000
3	2.0	14300	1.3	759.0	**BF90Z-../DPE11LA4**	641	42800	120000
3	1.8	15900	1.15	845.1	**BF90Z-../DPE11LA4**	641	42800	120000
3	1.5	17500	1.05	976.1	**BF90G50-../DPE11LA4**	651	42800	120000
3	1.4	19000	0.97	1043	**BF90G50-../DPE11LA4**	651	42800	120000
3	1.3	20400	0.91	1204	**BF90G50-../DPE11LA4**	651	42800	120000

The torques marked (*) are maximum permissible torques for service factor f_B=1,0.

4 kW

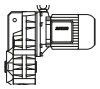

P_N	50 Hz			i	Type	m		
	n_2	M_2	f_B					
[kW]	[1/min]	[Nm]	[—]	[:1]		[kg]	[N]	[N]
4	230	166	1.6	6.34	**BF30-../DPE11LB4**	78	2400	-
4	180	210	1.35	8.07	**BF30-../DPE11LB4**	78	2650	-
4	146	260	1.25	9.99	**BF30-../DPE11LB4**	78	2850	-
4	113	335	1.1	12.91	**BF30-../DPE11LB4**	78	3050	-
4	91	415	0.98	16.00	**BF30-../DPE11LB4**	78	3250	-
4	83	460	1.05	17.65	**BF30-../DPE11LB4**	78	3300	-
4	75	500	1.0	19.41	**BF30-../DPE11LB4**	78	3400	-
4	67	570	0.93	21.85	**BF30-../DPE11LB4**	78	3500	-
4	61	620	0.89	24.03	**BF30-../DPE11LB4**	78	3600	-
4	250	152	2.2	5.87	**BF40-../DPE11LB4**	92	3550	-
4	191	200	1.85	7.62	**BF40-../DPE11LB4**	92	3900	-
4	153	245	1.7	9.48	**BF40-../DPE11LB4**	92	4150	-
4	123	310	1.5	11.79	**BF40-../DPE11LB4**	92	4450	-
4	97	390	1.35	15.02	**BF40-../DPE11LB4**	92	4800	-
4	84	450	1.4	17.35	**BF40-../DPE11LB4**	92	4950	-
4	76	500	1.35	19.09	**BF40-../DPE11LB4**	92	5100	-
4	68	560	1.25	21.60	**BF40-../DPE11LB4**	92	5200	-
4	62	610	1.2	23.77	**BF40-../DPE11LB4**	92	5400	-
4	54	700	1.1	26.86	**BF40-../DPE11LB4**	92	5600	-
4	49.5	770	1.05	29.55	**BF40-../DPE11LB4**	92	5800	-
4	42.5	890	0.96	34.21	**BF40-../DPE11LB4**	92	6000	-
4	39	970	0.92	37.64	**BF40-../DPE11LB4**	92	6200	-
4	35.5	1070	0.84	41.42	**BF40-../DPE11LB4**	92	6500	-
4	189	200	2.8	7.71	**BF50-../DPE11LB4**	122	5100	-
4	136	280	2.4	10.68	**BF50-../DPE11LB4**	122	5600	-
4	99	385	2.1	14.65	**BF50-../DPE11LB4**	122	6100	-
4	87	435	2.2	16.70	**BF50-../DPE11LB4**	122	6200	-
4	78	485	2.1	18.68	**BF50-../DPE11LB4**	122	6400	-
4	63	600	1.85	23.14	**BF50-../DPE11LB4**	122	6800	-
4	57	670	1.75	25.88	**BF50-../DPE11LB4**	122	7100	-
4	46	830	1.55	31.73	**BF50-../DPE11LB4**	122	7500	-
4	41	930	1.4	35.49	**BF50-../DPE11LB4**	122	7800	-
4	34.5	1100	1.2	42.15	**BF50-../DPE11LB4**	122	8500	-
4	31	1230	1.05	47.14	**BF50-../DPE11LB4**	122	8900	-
4	26	1460	0.89	56.86	**BF50-../DPE11LB4**	122	9300	-
4	102	370	3.2	14.24	**BF60-../DPE11LB4**	153	7100	20000
4	86	440	3.3	16.96	**BF60-../DPE11LB4**	153	7300	20600
4	78	485	3.1	18.81	**BF60-../DPE11LB4**	153	7600	21500
4	65	580	2.9	22.58	**BF60-../DPE11LB4**	153	8000	22600
4	58	650	2.7	25.05	**BF60-../DPE11LB4**	153	8200	23200
4	46.5	820	2.3	31.20	**BF60-../DPE11LB4**	153	8800	24900
4	42	900	2.2	34.62	**BF60-../DPE11LB4**	153	9100	25700
4	35	1090	1.95	41.60	**BF60-../DPE11LB4**	153	9600	27100
4	31.5	1210	1.85	46.16	**BF60-../DPE11LB4**	153	9900	28000
4	27	1410	1.65	54.44	**BF60-../DPE11LB4**	153	10500	29700
4	24.5	1550	1.5	60.40	**BF60-../DPE11LB4**	153	11100	31400
4	20.5	1860	1.25	72.15	**BF60-../DPE11LB4**	153	12000	34000
4	18.5	2050	1.1	80.05	**BF60-../DPE11LB4**	153	12600	35600
4	16	2350	0.98	93.44	**BF60-../DPE11LB4**	153	13500	38200
4	14	2700	0.85	103.7	**BF60-../DPE11LB4**	153	14100	39900
4	23.5	1620	3.2	61.94	**BF70-../DPE11LB4**	232	10800	37400
4	20.5	1860	2.8	72.26	**BF70-../DPE11LB4**	232	12000	39600
4	18	2100	2.5	81.82	**BF70-../DPE11LB4**	232	12800	41300
4	15.5	2450	2.1	95.46	**BF70-../DPE11LB4**	232	14000	43700
4	14	2700	1.95	105.2	**BF70-../DPE11LB4**	232	14700	45100
4	12	3150	1.65	122.7	**BF70-../DPE11LB4**	232	16100	47700
4	11	3450	1.5	133.0	**BF70Z-../DPE11LB4**	258	16100	47700
4	9.5	4000	1.3	154.0	**BF70Z-../DPE11LB4**	258	16100	47700
4	8.1	4700	1.1	179.7	**BF70Z-../DPE11LB4**	258	16100	47700
4	7.3	5200	1.0	199.7	**BF70Z-../DPE11LB4**	258	16100	47700
4	6.3	6000	0.87	233.0	**BF70Z-../DPE11LB4**	258	16100	47700
4	12	3150	3.0	122.4	**BF80-../DPE11LB4**	328	24500	75000
4	10.5	3600	2.6	139.7	**BF80-../DPE11LB4**	328	26700	75000
4	9.2	4150	2.3	158.5	**BF80-../DPE11LB4**	328	29000	75000
4	7.9	4800	2.0	184.5	**BF80-../DPE11LB4**	328	31800	75000

The torques marked (*) are maximum permissible torques for service factor f_B=1,0.

4 kW

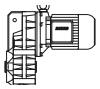

P_N	50 Hz			i	**Type**	m		
	n_2	M_2	f_B					
[kW]	[1/min]	[Nm]	[—]	[:1]		[kg]	[N]	[N]
4	7.0	5400	1.75	209.4	**BF80-../DPE11LB4**	328	34300	75000
4	6.2	6100	1.55	237.1	**BF80-../DPE11LB4**	328	36900	75000
4	5.4	7000	1.35	269.1	**BF80-../DPE11LB4**	328	39600	75000
4	5.0	7600	1.4	291.7	**BF80Z-../DPE11LB4**	375	39600	75000
4	4.2	9000	1.15	347.3	**BF80Z-../DPE11LB4**	375	39600	75000
4	3.7	10300	1.0	394.2	**BF80Z-../DPE11LB4**	375	39600	75000
4	3.3	11500	0.91	450.4	**BF80Z-../DPE11LB4**	375	39600	75000
4	2.9	13100	0.8	511.2	**BF80Z-../DPE11LB4**	375	39600	75000
4	7.3	5200	3.2	198.8	**BF90-../DPE11LB4**	581	36000	111300
4	6.3	6000	2.8	232.6	**BF90-../DPE11LB4**	581	39900	118300
4	5.6	6800	2.5	259.0	**BF90-../DPE11LB4**	581	42800	120000
4	5.4	7000	2.6	269.8	**BF90Z-../DPE11LB4**	641	42800	120000
4	4.9	7700	2.4	300.4	**BF90Z-../DPE11LB4**	641	42800	120000
4	4.3	8800	2.1	343.6	**BF90Z-../DPE11LB4**	641	42800	120000
4	3.8	10000	1.85	382.6	**BF90Z-../DPE11LB4**	641	42800	120000
4	3.2	11900	1.55	456.7	**BF90Z-../DPE11LB4**	641	42800	120000
4	2.9	13100	1.4	508.5	**BF90Z-../DPE11LB4**	641	42800	120000
4	2.5	15200	1.2	591.1	**BF90Z-../DPE11LB4**	641	42800	120000
4	2.3	16600	1.1	658.1	**BF90Z-../DPE11LB4**	641	42800	120000
4	2.0	19100	0.97	759.0	**BF90Z-../DPE11LB4**	641	42800	120000
4	1.8	21200	0.87	845.1	**BF90Z-../DPE11LB4**	641	42800	120000

5.5 kW

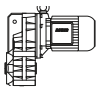

P_N	50 Hz			i	**Type**	m		
	n_2	M_2	f_B					
[kW]	[1/min]	[Nm]	[—]	[:1]		[kg]	[N]	[N]
5.5	235	220	1.2	6.34	**BF30-../DPE11LB4C**	82	2400	-
5.5	182	285	1.0	8.07	**BF30-../DPE11LB4C**	82	2650	-
5.5	147	355	0.9	9.99	**BF30-../DPE11LB4C**	82	2850	-
5.5	114	460	0.8	12.91	**BF30-../DPE11LB4C**	82	3050	-
5.5	250	210	1.6	5.87	**BF40-../DPE11LB4C**	96	3550	-
5.5	193	270	1.35	7.62	**BF40-../DPE11LB4C**	96	3900	-
5.5	155	335	1.25	9.48	**BF40-../DPE11LB4C**	96	4150	-
5.5	125	420	1.1	11.79	**BF40-../DPE11LB4C**	96	4450	-
5.5	98	530	0.98	15.02	**BF40-../DPE11LB4C**	96	4800	-
5.5	85	610	1.05	17.35	**BF40-../DPE11LB4C**	96	4950	-
5.5	77	680	0.98	19.09	**BF40-../DPE11LB4C**	96	5100	-
5.5	68	770	0.91	21.60	**BF40-../DPE11LB4C**	96	5200	-
5.5	62	840	0.88	23.77	**BF40-../DPE11LB4C**	96	5400	-
5.5	55	950	0.82	26.86	**BF40-../DPE11LB4C**	96	5600	-
5.5	275	191	2.6	5.38	**BF50-../DPE11LB4C**	126	4500	-
5.5	191	275	2.1	7.71	**BF50-../DPE11LB4C**	126	5100	-
5.5	138	380	1.8	10.68	**BF50-../DPE11LB4C**	126	5600	-
5.5	100	520	1.5	14.65	**BF50-../DPE11LB4C**	126	6100	-
5.5	88	590	1.6	16.70	**BF50-../DPE11LB4C**	126	6200	-
5.5	79	660	1.5	18.68	**BF50-../DPE11LB4C**	126	6400	-
5.5	64	820	1.35	23.14	**BF50-../DPE11LB4C**	126	6800	-
5.5	57	920	1.25	25.88	**BF50-../DPE11LB4C**	126	7100	-
5.5	46.5	1120	1.15	31.73	**BF50-../DPE11LB4C**	126	7500	-
5.5	41.5	1260	1.05	35.49	**BF50-../DPE11LB4C**	126	7800	-
5.5	35	1500	0.87	42.15	**BF50-../DPE11LB4C**	126	8500	-
5.5	190	275	3.2	7.74	**BF60-../DPE11LB4C**	157	6000	16900
5.5	143	365	2.8	10.31	**BF60-../DPE11LB4C**	157	6500	18400
5.5	103	500	2.4	14.24	**BF60-../DPE11LB4C**	157	7100	20000
5.5	87	600	2.4	16.96	**BF60-../DPE11LB4C**	157	7300	20600
5.5	78	670	2.3	18.81	**BF60-../DPE11LB4C**	157	7600	21500
5.5	65	800	2.1	22.58	**BF60-../DPE11LB4C**	157	8000	22600
5.5	59	890	1.95	25.05	**BF60-../DPE11LB4C**	157	8200	23200
5.5	47	1110	1.7	31.20	**BF60-../DPE11LB4C**	157	8800	24900
5.5	42.5	1230	1.6	34.62	**BF60-../DPE11LB4C**	157	9100	25700
5.5	35.5	1470	1.45	41.60	**BF60-../DPE11LB4C**	157	9600	27100

The torques marked (*) are maximum permissible torques for service factor f_B=1,0.

5.5 kW

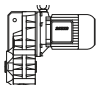

P_N	50 Hz			i	Type	m		
	n_2	M_2	f_B					
[kW]	[1/min]	[Nm]	[—]	[:1]		[kg]	[N]	[N]
5.5	32	1640	1.35	46.16	**BF60-../DPE11LB4C**	157	9900	28000
5.5	27	1940	1.2	54.44	**BF60-../DPE11LB4C**	157	10500	29700
5.5	24.5	2100	1.1	60.40	**BF60-../DPE11LB4C**	157	11100	31400
5.5	20.5	2550	0.9	72.15	**BF60-../DPE11LB4C**	157	12000	34000
5.5	18.5	2800	0.82	80.05	**BF60-../DPE11LB4C**	157	12600	35600
5.5	31	1690	3.1	47.82	**BF70-../DPE11LB4C**	236	9100	34000
5.5	26.5	1980	2.6	55.79	**BF70-../DPE11LB4C**	236	10200	36000
5.5	24	2150	2.4	61.94	**BF70-../DPE11LB4C**	236	10800	37400
5.5	20.5	2550	2.0	72.26	**BF70-../DPE11LB4C**	236	12000	39600
5.5	18	2900	1.8	81.82	**BF70-../DPE11LB4C**	236	12800	41300
5.5	15.5	3350	1.55	95.46	**BF70-../DPE11LB4C**	236	14000	43700
5.5	14	3750	1.4	105.2	**BF70-../DPE11LB4C**	236	14700	45100
5.5	12	4350	1.2	122.7	**BF70-../DPE11LB4C**	236	16100	47700
5.5	11.5	4550	1.15	133.0	**BF70Z-../DPE11LB4C**	262	16100	47700
5.5	9.6	5400	0.96	154.0	**BF70Z-../DPE11LB4C**	262	16100	47700
5.5	8.2	6400	0.81	179.7	**BF70Z-../DPE11LB4C**	262	16100	47700
5.5	18	2900	3.3	83.16	**BF80-../DPE11LB4C**	332	18400	65100
5.5	16	3250	2.9	94.38	**BF80-../DPE11LB4C**	332	20300	68500
5.5	14	3750	2.5	107.9	**BF80-../DPE11LB4C**	332	22400	72300
5.5	12	4350	2.2	122.4	**BF80-../DPE11LB4C**	332	24500	75000
5.5	10.5	5000	1.9	139.7	**BF80-../DPE11LB4C**	332	26700	75000
5.5	9.3	5600	1.7	158.5	**BF80-../DPE11LB4C**	332	29000	75000
5.5	8.0	6500	1.45	184.5	**BF80-../DPE11LB4C**	332	31800	75000
5.5	7.0	7500	1.25	209.4	**BF80-../DPE11LB4C**	332	34300	75000
5.5	6.2	8400	1.15	237.1	**BF80-../DPE11LB4C**	332	36900	75000
5.5	5.5	9500	1.0	269.1	**BF80-../DPE11LB4C**	332	39600	75000
5.5	5.1	10200	1.05	291.7	**BF80Z-../DPE11LB4C**	379	39600	75000
5.5	4.3	12200	0.86	347.3	**BF80Z-../DPE11LB4C**	379	39600	75000
5.5	9.5	5500	3.1	154.8	**BF90-../DPE11LB4C**	585	30100	100800
5.5	8.3	6300	2.7	178.6	**BF90-../DPE11LB4C**	585	33400	106700
5.5	7.4	7000	2.4	198.8	**BF90-../DPE11LB4C**	585	36000	111300
5.5	6.3	8300	2.0	232.6	**BF90-../DPE11LB4C**	585	39900	118300
5.5	5.7	9200	1.85	259.0	**BF90-../DPE11LB4C**	585	42800	120000
5.5	5.5	9500	1.95	269.8	**BF90Z-../DPE11LB4C**	645	42800	120000
5.5	4.9	10700	1.75	300.4	**BF90Z-../DPE11LB4C**	645	42800	120000
5.5	4.3	12200	1.5	343.6	**BF90Z-../DPE11LB4C**	645	42800	120000
5.5	3.9	13400	1.4	382.6	**BF90Z-../DPE11LB4C**	645	42800	120000
5.5	3.3	15900	1.15	456.7	**BF90Z-../DPE11LB4C**	645	42800	120000
5.5	2.9	18100	1.0	508.5	**BF90Z-../DPE11LB4C**	645	42800	120000
5.5	2.5	21000	0.88	591.1	**BF90Z-../DPE11LB4C**	645	42800	120000
5.5	2.3	22800	0.81	658.1	**BF90Z-../DPE11LB4C**	645	42800	120000

7.5 kW

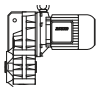

P_N	50 Hz			i	Type	m		
	n_2	M_2	f_B					
[kW]	[1/min]	[Nm]	[—]	[:1]		[kg]	[N]	[N]
7.5	275	260	1.9	5.38	**BF50-../DPE13XA4**	137	4500	-
7.5	190	375	1.5	7.71	**BF50-../DPE13XA4**	137	5100	-
7.5	137	520	1.3	10.68	**BF50-../DPE13XA4**	137	5600	-
7.5	100	710	1.1	14.65	**BF50-../DPE13XA4**	137	6100	-
7.5	88	810	1.15	16.70	**BF50-../DPE13XA4**	137	6200	-
7.5	79	900	1.1	18.68	**BF50-../DPE13XA4**	137	6400	-
7.5	64	1110	1.0	23.14	**BF50-../DPE13XA4**	137	6800	-
7.5	57	1250	0.93	25.88	**BF50-../DPE13XA4**	137	7100	-
7.5	46.5	1540	0.82	31.73	**BF50-../DPE13XA4**	137	7500	-
7.5	280	255	3.0	5.22	**BF60-../DPE13XA4**	170	5200	14800
7.5	189	375	2.3	7.74	**BF60-../DPE13XA4**	170	6000	16900
7.5	142	500	2.0	10.31	**BF60-../DPE13XA4**	170	6500	18400
7.5	103	690	1.75	14.24	**BF60-../DPE13XA4**	170	7100	20000
7.5	87	820	1.75	16.96	**BF60-../DPE13XA4**	170	7300	20600
7.5	78	910	1.65	18.81	**BF60-../DPE13XA4**	170	7600	21500

The torques marked (*) are maximum permissible torques for service factor f_B=1,0.

7.5 kW

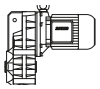

P_N	50 Hz			i	Type	m		
	n_2	M_2	f_B					
[kW]	[1/min]	[Nm]	[—]	[:1]		[kg]	[N]	[N]
7.5	65	1100	1.5	22.58	**BF60-../DPE13XA4**	170	8000	22600
7.5	59	1210	1.45	25.05	**BF60-../DPE13XA4**	170	8200	23200
7.5	47	1520	1.25	31.20	**BF60-../DPE13XA4**	170	8800	24900
7.5	42.5	1680	1.2	34.62	**BF60-../DPE13XA4**	170	9100	25700
7.5	35.5	2000	1.05	41.60	**BF60-../DPE13XA4**	170	9600	27100
7.5	32	2200	1.0	46.16	**BF60-../DPE13XA4**	170	9900	28000
7.5	27	2650	0.87	54.44	**BF60-../DPE13XA4**	170	10500	29700
7.5	40	1790	2.9	36.88	**BF70-../DPE13XA4**	249	7900	31100
7.5	34	2100	2.5	43.02	**BF70-../DPE13XA4**	249	8700	32800
7.5	31	2300	2.3	47.82	**BF70-../DPE13XA4**	249	9100	34000
7.5	26.5	2700	1.95	55.79	**BF70-../DPE13XA4**	249	10200	36000
7.5	24	2950	1.75	61.94	**BF70-../DPE13XA4**	249	10800	37400
7.5	20.5	3450	1.5	72.26	**BF70-../DPE13XA4**	249	12000	39600
7.5	18	3950	1.3	81.82	**BF70-../DPE13XA4**	249	12800	41300
7.5	15.5	4600	1.15	95.46	**BF70-../DPE13XA4**	249	14000	43700
7.5	14	5100	1.0	105.2	**BF70-../DPE13XA4**	249	14700	45100
7.5	12	5900	0.88	122.7	**BF70-../DPE13XA4**	249	16100	47700
7.5	11	6500	0.8	133.0	**BF70Z-../DPE13XA4**	274	16100	47700
7.5	24	2950	3.2	61.55	**BF80-../DPE13XA4**	345	14800	58100
7.5	21	3400	2.8	69.86	**BF80-../DPE13XA4**	345	15900	60600
7.5	18	3950	2.4	83.16	**BF80-../DPE13XA4**	345	18400	65100
7.5	15.5	4600	2.1	94.38	**BF80-../DPE13XA4**	345	20300	68500
7.5	14	5100	1.85	107.9	**BF80-../DPE13XA4**	345	22400	72300
7.5	12	5900	1.6	122.4	**BF80-../DPE13XA4**	345	24500	75000
7.5	10.5	6800	1.4	139.7	**BF80-../DPE13XA4**	345	26700	75000
7.5	9.3	7700	1.25	158.5	**BF80-../DPE13XA4**	345	29000	75000
7.5	8.0	8900	1.05	184.5	**BF80-../DPE13XA4**	345	31800	75000
7.5	7.0	10200	0.93	209.4	**BF80-../DPE13XA4**	345	34300	75000
7.5	6.2	11500	0.83	237.1	**BF80-../DPE13XA4**	345	36900	75000
7.5	14	5100	3.3	107.5	**BF90-../DPE13XA4**	597	22300	86900
7.5	12.5	5700	2.9	119.7	**BF90-../DPE13XA4**	597	24500	90800
7.5	10.5	6800	2.5	139.1	**BF90-../DPE13XA4**	597	27700	96300
7.5	9.5	7500	2.2	154.8	**BF90-../DPE13XA4**	597	30100	100800
7.5	8.2	8700	1.95	178.6	**BF90-../DPE13XA4**	597	33400	106700
7.5	7.4	9600	1.75	198.8	**BF90-../DPE13XA4**	597	36000	111300
7.5	6.3	11300	1.5	232.6	**BF90-../DPE13XA4**	597	39900	118300
7.5	5.7	12500	1.35	259.0	**BF90-../DPE13XA4**	597	42800	120000
7.5	5.5	13000	1.4	269.8	**BF90Z-../DPE13XA4**	658	42800	120000
7.5	4.9	14600	1.25	300.4	**BF90Z-../DPE13XA4**	658	42800	120000
7.5	4.3	16600	1.1	343.6	**BF90Z-../DPE13XA4**	658	42800	120000
7.5	3.9	18300	1.0	382.6	**BF90Z-../DPE13XA4**	658	42800	120000
7.5	3.2	22300	0.83	456.7	**BF90Z-../DPE13XA4**	658	42800	120000

9.5 kW

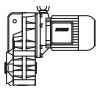

P_N	50 Hz			i	Type	m		
	n_2	M_2	f_B					
[kW]	[1/min]	[Nm]	[—]	[:1]		[kg]	[N]	[N]
9.5	275	325	1.55	5.38	**BF50-../DPE16LB4**	173	4500	-
9.5	192	470	1.2	7.71	**BF50-../DPE16LB4**	173	5100	-
9.5	139	650	1.05	10.68	**BF50-../DPE16LB4**	173	5600	-
9.5	101	890	0.89	14.65	**BF50-../DPE16LB4**	173	6100	-
9.5	89	1010	0.94	16.70	**BF50-../DPE16LB4**	173	6200	-
9.5	79	1140	0.88	18.68	**BF50-../DPE16LB4**	173	6400	-
9.5	285	315	2.4	5.22	**BF60-../DPE16LB4**	206	5200	14800
9.5	191	475	1.85	7.74	**BF60-../DPE16LB4**	206	6000	16900
9.5	144	630	1.6	10.31	**BF60-../DPE16LB4**	206	6500	18400
9.5	104	870	1.35	14.24	**BF60-../DPE16LB4**	206	7100	20000
9.5	87	1040	1.4	16.96	**BF60-../DPE16LB4**	206	7300	20600
9.5	79	1140	1.35	18.81	**BF60-../DPE16LB4**	206	7600	21500
9.5	66	1370	1.2	22.58	**BF60-../DPE16LB4**	206	8000	22600
9.5	59	1530	1.15	25.05	**BF60-../DPE16LB4**	206	8200	23200

The torques marked (*) are maximum permissible torques for service factor f_B=1,0.

9.5 kW

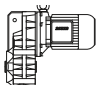

P_N	50 Hz			i	Type	m		
	n_2	M_2	f_B					
[kW]	[1/min]	[Nm]	[—]	[:1]		[kg]	[N]	[N]
9.5	47.5	1910	0.99	31.20	**BF60-../DPE16LB4**	206	8800	24900
9.5	43	2100	0.95	34.62	**BF60-../DPE16LB4**	206	9100	25700
9.5	35.5	2550	0.84	41.60	**BF60-../DPE16LB4**	206	9600	27100
9.5	32	2800	0.8	46.16	**BF60-../DPE16LB4**	206	9900	28000
9.5	55	1640	3.2	27.29	**BF70-../DPE16LB4**	289	7000	28400
9.5	46.5	1950	2.7	31.84	**BF70-../DPE16LB4**	289	7700	30000
9.5	40	2250	2.3	36.88	**BF70-../DPE16LB4**	289	7900	31100
9.5	34.5	2600	2.0	43.02	**BF70-../DPE16LB4**	289	8700	32800
9.5	31	2900	1.8	47.82	**BF70-../DPE16LB4**	289	9100	34000
9.5	26.5	3400	1.55	55.79	**BF70-../DPE16LB4**	289	10200	36000
9.5	24	3750	1.4	61.94	**BF70-../DPE16LB4**	289	10800	37400
9.5	20.5	4400	1.2	72.26	**BF70-../DPE16LB4**	289	12000	39600
9.5	18.5	4900	1.05	81.82	**BF70-../DPE16LB4**	289	12800	41300
9.5	15.5	5800	0.9	95.46	**BF70-../DPE16LB4**	289	14000	43700
9.5	14.5	6200	0.84	105.2	**BF70-../DPE16LB4**	289	14700	45100
9.5	31.5	2850	3.0	47.46	**BF80-../DPE16LB4**	385	13400	53700
9.5	27.5	3250	2.8	53.86	**BF80-../DPE16LB4**	385	14000	55800
9.5	24	3750	2.5	61.55	**BF80-../DPE16LB4**	385	14800	58100
9.5	21.5	4200	2.3	69.86	**BF80-../DPE16LB4**	385	15900	60600
9.5	18	5000	1.9	83.16	**BF80-../DPE16LB4**	385	18400	65100
9.5	16	5600	1.7	94.38	**BF80-../DPE16LB4**	385	20300	68500
9.5	14	6400	1.5	107.9	**BF80-../DPE16LB4**	385	22400	72300
9.5	12.5	7200	1.3	122.4	**BF80-../DPE16LB4**	385	24500	75000
9.5	11	8200	1.15	139.7	**BF80-../DPE16LB4**	385	26700	75000
9.5	9.4	9600	0.99	158.5	**BF80-../DPE16LB4**	385	29000	75000
9.5	8.0	11300	0.84	184.5	**BF80-../DPE16LB4**	385	31800	75000
9.5	16.5	5400	3.1	90.02	**BF90-../DPE16LB4**	632	18900	80600
9.5	14	6400	2.6	107.5	**BF90-../DPE16LB4**	632	22300	86900
9.5	12.5	7200	2.3	119.7	**BF90-../DPE16LB4**	632	24500	90800
9.5	11	8200	2.0	139.1	**BF90-../DPE16LB4**	632	27700	96300
9.5	9.6	9400	1.8	154.8	**BF90-../DPE16LB4**	632	30100	100800
9.5	8.3	10900	1.55	178.6	**BF90-../DPE16LB4**	632	33400	106700
9.5	7.5	12000	1.4	198.8	**BF90-../DPE16LB4**	632	36000	111300
9.5	6.4	14100	1.2	232.6	**BF90-../DPE16LB4**	632	39900	118300
9.5	5.7	15900	1.05	259.0	**BF90-../DPE16LB4**	632	42800	120000
9.5	5.5	16400	1.15	269.8	**BF90Z-../DPE16LB4**	694	42800	120000
9.5	5.0	18100	1.0	300.4	**BF90Z-../DPE16LB4**	694	42800	120000
9.5	4.3	21000	0.88	343.6	**BF90Z-../DPE16LB4**	694	42800	120000
9.5	3.9	23200	0.8	382.6	**BF90Z-../DPE16LB4**	694	42800	120000

11 kW

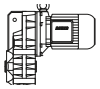

P_N	50 Hz			i	Type	m		
	n_2	M_2	f_B					
[kW]	[1/min]	[Nm]	[—]	[:1]		[kg]	[N]	[N]
11	275	380	1.3	5.38	**BF50-../DPE16LB4**	173	4500	-
11	192	540	1.05	7.71	**BF50-../DPE16LB4**	173	5100	-
11	139	750	0.9	10.68	**BF50-../DPE16LB4**	173	5600	-
11	89	1180	0.81	16.70	**BF50-../DPE16LB4**	173	6200	-
11	285	365	2.1	5.22	**BF60-../DPE16LB4**	206	5200	14800
11	191	550	1.6	7.74	**BF60-../DPE16LB4**	206	6000	16900
11	144	720	1.4	10.31	**BF60-../DPE16LB4**	206	6500	18400
11	104	1010	1.2	14.24	**BF60-../DPE16LB4**	206	7100	20000
11	87	1200	1.2	16.96	**BF60-../DPE16LB4**	206	7300	20600
11	79	1320	1.15	18.81	**BF60-../DPE16LB4**	206	7600	21500
11	66	1590	1.05	22.58	**BF60-../DPE16LB4**	206	8000	22600
11	59	1780	0.97	25.05	**BF60-../DPE16LB4**	206	8200	23200
11	47.5	2200	0.86	31.20	**BF60-../DPE16LB4**	206	8800	24900
11	43	2400	0.83	34.62	**BF60-../DPE16LB4**	206	9100	25700
11	71	1470	3.1	21.04	**BF70-../DPE16LB4**	289	6400	26300
11	61	1720	2.9	24.55	**BF70-../DPE16LB4**	289	7000	27700

The torques marked (*) are maximum permissible torques for service factor f_B=1,0.

11 kW

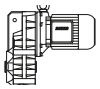

P_N	50 Hz			i	Type	m		
	n_2	M_2	f_B					
[kW]	[1/min]	[Nm]	[—]	[:1]		[kg]	[N]	[N]
11	55	1910	2.7	27.29	**BF70-../DPE16LB4**	289	7000	28400
11	46.5	2250	2.3	31.84	**BF70-../DPE16LB4**	289	7700	30000
11	40	2600	2.0	36.88	**BF70-../DPE16LB4**	289	7900	31100
11	34.5	3000	1.75	43.02	**BF70-../DPE16LB4**	289	8700	32800
11	31	3350	1.55	47.82	**BF70-../DPE16LB4**	289	9100	34000
11	26.5	3950	1.3	55.79	**BF70-../DPE16LB4**	289	10200	36000
11	24	4350	1.2	61.94	**BF70-../DPE16LB4**	289	10800	37400
11	20.5	5100	1.0	72.26	**BF70-../DPE16LB4**	289	12000	39600
11	18.5	5600	0.93	81.82	**BF70-../DPE16LB4**	289	12800	41300
11	44	2350	3.3	33.61	**BF80-../DPE16LB4**	385	11700	48400
11	39	2650	3.0	38.14	**BF80-../DPE16LB4**	385	12200	50300
11	31.5	3300	2.6	47.46	**BF80-../DPE16LB4**	385	13400	53700
11	27.5	3800	2.4	53.86	**BF80-../DPE16LB4**	385	14000	55800
11	24	4350	2.1	61.55	**BF80-../DPE16LB4**	385	14800	58100
11	21.5	4850	1.95	69.86	**BF80-../DPE16LB4**	385	15900	60600
11	18	5800	1.65	83.16	**BF80-../DPE16LB4**	385	18400	65100
11	16	6500	1.45	94.38	**BF80-../DPE16LB4**	385	20300	68500
11	14	7500	1.25	107.9	**BF80-../DPE16LB4**	385	22400	72300
11	12.5	8400	1.15	122.4	**BF80-../DPE16LB4**	385	24500	75000
11	11	9500	1.0	139.7	**BF80-../DPE16LB4**	385	26700	75000
11	9.4	11100	0.86	158.5	**BF80-../DPE16LB4**	385	29000	75000
11	21	5000	3.2	70.69	**BF90-../DPE16LB4**	632	16800	74700
11	18.5	5600	3.0	80.85	**BF90-../DPE16LB4**	632	17500	77500
11	16.5	6300	2.7	90.02	**BF90-../DPE16LB4**	632	18900	80600
11	14	7500	2.2	107.5	**BF90-../DPE16LB4**	632	22300	86900
11	12.5	8400	2.0	119.7	**BF90-../DPE16LB4**	632	24500	90800
11	11	9500	1.75	139.1	**BF90-../DPE16LB4**	632	27700	96300
11	9.6	10900	1.55	154.8	**BF90-../DPE16LB4**	632	30100	100800
11	8.3	12600	1.35	178.6	**BF90-../DPE16LB4**	632	33400	106700
11	7.5	14000	1.2	198.8	**BF90-../DPE16LB4**	632	36000	111300
11	6.4	16400	1.0	232.6	**BF90-../DPE16LB4**	632	39900	118300
11	5.7	18400	0.91	259.0	**BF90-../DPE16LB4**	632	42800	120000
11	5.5	19100	0.97	269.8	**BF90Z-../DPE16LB4**	694	42800	120000
11	5.0	21000	0.88	300.4	**BF90Z-../DPE16LB4**	694	42800	120000

15 kW

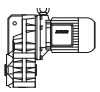

P_N	50 Hz			i	Type	m		
	n_2	M_2	f_B					
[kW]	[1/min]	[Nm]	[—]	[:1]		[kg]	[N]	[N]
15	275	520	0.96	5.38	**BF50-../DPE16XB4**	183	4500	-
15	285	500	1.5	5.22	**BF60-../DPE16XB4**	216	5200	14800
15	191	750	1.15	7.74	**BF60-../DPE16XB4**	216	6000	16900
15	144	990	1.0	10.31	**BF60-../DPE16XB4**	216	6500	18400
15	104	1370	0.87	14.24	**BF60-../DPE16XB4**	216	7100	20000
15	87	1640	0.88	16.96	**BF60-../DPE16XB4**	216	7300	20600
15	79	1810	0.84	18.81	**BF60-../DPE16XB4**	216	7600	21500
15	99	1440	2.5	14.90	**BF70-../DPE16XB4**	299	5900	24000
15	85	1680	2.5	17.39	**BF70-../DPE16XB4**	299	6200	25000
15	71	2000	2.3	21.04	**BF70-../DPE16XB4**	299	6400	26300
15	61	2300	2.2	24.55	**BF70-../DPE16XB4**	299	7000	27700
15	55	2600	2.0	27.29	**BF70-../DPE16XB4**	299	7000	28400
15	46.5	3050	1.7	31.84	**BF70-../DPE16XB4**	299	7700	30000
15	40	3550	1.45	36.88	**BF70-../DPE16XB4**	299	7900	31100
15	34.5	4150	1.25	43.02	**BF70-../DPE16XB4**	299	8700	32800
15	31	4600	1.15	47.82	**BF70-../DPE16XB4**	299	9100	34000
15	26.5	5400	0.96	55.79	**BF70-../DPE16XB4**	299	10200	36000
15	24	5900	0.88	61.94	**BF70-../DPE16XB4**	299	10800	37400
15	90	1590	3.3	16.49	**BF80-../DPE16XB4**	395	11400	41400
15	64	2200	2.9	23.29	**BF80-../DPE16XB4**	395	11800	44900
15	49	2900	2.5	30.21	**BF80-../DPE16XB4**	395	12300	47900

The torques marked (*) are maximum permissible torques for service factor f_B=1,0.

15 kW

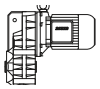

P_N	50 Hz			i	**Type**	m		
	n_2	M_2	f_B					
[kW]	[1/min]	[Nm]	[—]	[:1]		[kg]	[N]	[N]
15	44	3250	2.4	33.61	**BF80-../DPE16XB4**	395	11700	48400
15	39	3650	2.2	38.14	**BF80-../DPE16XB4**	395	12200	50300
15	31.5	4500	1.9	47.46	**BF80-../DPE16XB4**	395	13400	53700
15	27.5	5200	1.7	53.86	**BF80-../DPE16XB4**	395	14000	55800
15	24	5900	1.6	61.55	**BF80-../DPE16XB4**	395	14800	58100
15	21.5	6600	1.45	69.86	**BF80-../DPE16XB4**	395	15900	60600
15	18	7900	1.2	83.16	**BF80-../DPE16XB4**	395	18400	65100
15	16	8900	1.05	94.38	**BF80-../DPE16XB4**	395	20300	68500
15	14	10200	0.93	107.9	**BF80-../DPE16XB4**	395	22400	72300
15	12.5	11400	0.83	122.4	**BF80-../DPE16XB4**	395	24500	75000
15	32	4450	3.2	46.43	**BF90-../DPE16XB4**	642	13800	65500
15	29	4900	2.9	51.70	**BF90-../DPE16XB4**	642	14600	67800
15	23.5	6000	2.6	63.49	**BF90-../DPE16XB4**	642	15800	72000
15	21	6800	2.3	70.69	**BF90-../DPE16XB4**	642	16800	74700
15	18.5	7700	2.1	80.85	**BF90-../DPE16XB4**	642	17500	77500
15	16.5	8600	1.95	90.02	**BF90-../DPE16XB4**	642	18900	80600
15	14	10200	1.65	107.5	**BF90-../DPE16XB4**	642	22300	86900
15	12.5	11400	1.45	119.7	**BF90-../DPE16XB4**	642	24500	90800
15	11	13000	1.3	139.1	**BF90-../DPE16XB4**	642	27700	96300
15	9.6	14900	1.15	154.8	**BF90-../DPE16XB4**	642	30100	100800
15	8.3	17200	0.98	178.6	**BF90-../DPE16XB4**	642	33400	106700
15	7.5	19100	0.88	198.8	**BF90-../DPE16XB4**	642	36000	111300

18.5 kW

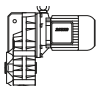

P_N	50 Hz			i	**Type**	m		
	n_2	M_2	f_B					
[kW]	[1/min]	[Nm]	[—]	[:1]		[kg]	[N]	[N]
18.5	285	610	1.25	5.22	**BF60-../DPE18LB4**	263	5200	14800
18.5	192	920	0.94	7.74	**BF60-../DPE18LB4**	263	6000	16900
18.5	144	1220	0.83	10.31	**BF60-../DPE18LB4**	263	6500	18400
18.5	144	1220	2.1	10.32	**BF70-../DPE18LB4**	340	4600	18700
18.5	123	1430	2.1	12.04	**BF70-../DPE18LB4**	340	4900	19700
18.5	100	1760	2.1	14.90	**BF70-../DPE18LB4**	340	5900	24000
18.5	86	2050	2.1	17.39	**BF70-../DPE18LB4**	340	6200	25000
18.5	71	2450	1.9	21.04	**BF70-../DPE18LB4**	340	6400	26300
18.5	61	2850	1.75	24.55	**BF70-../DPE18LB4**	340	7000	27700
18.5	55	3200	1.65	27.29	**BF70-../DPE18LB4**	340	7000	28400
18.5	46.5	3750	1.4	31.84	**BF70-../DPE18LB4**	340	7700	30000
18.5	40.5	4350	1.2	36.88	**BF70-../DPE18LB4**	340	7900	31100
18.5	34.5	5100	1.0	43.02	**BF70-../DPE18LB4**	340	8700	32800
18.5	31	5600	0.93	47.82	**BF70-../DPE18LB4**	340	9100	34000
18.5	27	6500	0.8	55.79	**BF70-../DPE18LB4**	340	10200	36000
18.5	130	1350	2.7	11.42	**BF80-../DPE18LB4**	436	8900	32200
18.5	90	1960	2.7	16.49	**BF80-../DPE18LB4**	436	11400	41400
18.5	64	2750	2.3	23.29	**BF80-../DPE18LB4**	436	11800	44900
18.5	49	3600	2.0	30.21	**BF80-../DPE18LB4**	436	12300	47900
18.5	44.5	3950	1.95	33.61	**BF80-../DPE18LB4**	436	11700	48400
18.5	39	4500	1.8	38.14	**BF80-../DPE18LB4**	436	12200	50300
18.5	31.5	5600	1.55	47.46	**BF80-../DPE18LB4**	436	13400	53700
18.5	27.5	6400	1.4	53.86	**BF80-../DPE18LB4**	436	14000	55800
18.5	24.5	7200	1.3	61.55	**BF80-../DPE18LB4**	436	14800	58100
18.5	21.5	8200	1.15	69.86	**BF80-../DPE18LB4**	436	15900	60600
18.5	18	9800	0.97	83.16	**BF80-../DPE18LB4**	436	18400	65100
18.5	16	11000	0.86	94.38	**BF80-../DPE18LB4**	436	20300	68500
18.5	44	4000	3.2	33.71	**BF90-../DPE18LB4**	688	11900	59300
18.5	39.5	4450	3.0	37.54	**BF90-../DPE18LB4**	688	12700	61500
18.5	32	5500	2.6	46.43	**BF90-../DPE18LB4**	688	13800	65500
18.5	29	6000	2.4	51.70	**BF90-../DPE18LB4**	688	14600	67800
18.5	23.5	7500	2.1	63.49	**BF90-../DPE18LB4**	688	15800	72000
18.5	21	8400	1.9	70.69	**BF90-../DPE18LB4**	688	16800	74700
18.5	18.5	9500	1.75	80.85	**BF90-../DPE18LB4**	688	17500	77500

The torques marked (*) are maximum permissible torques for service factor f_B=1,0.

18.5 kW

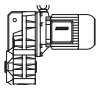

P_N	50 Hz			i	Type	m		
	n_2	M_2	f_B					
[kW]	[1/min]	[Nm]	[—]	[:1]		[kg]	[N]	[N]
18.5	16.5	10700	1.55	90.02	**BF90-../DPE18LB4**	688	18900	80600
18.5	14	12600	1.35	107.5	**BF90-../DPE18LB4**	688	22300	86900
18.5	12.5	14100	1.2	119.7	**BF90-../DPE18LB4**	688	24500	90800
18.5	11	16000	1.05	139.1	**BF90-../DPE18LB4**	688	27700	96300
18.5	9.6	18400	0.91	154.8	**BF90-../DPE18LB4**	688	30100	100800

22 kW

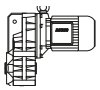

P_N	50 Hz			i	Type	m		
	n_2	M_2	f_B					
[kW]	[1/min]	[Nm]	[—]	[:1]		[kg]	[N]	[N]
22	143	1460	1.7	10.32	**BF70-../DPE18XB4**	358	4600	18700
22	123	1700	1.75	12.04	**BF70-../DPE18XB4**	358	4900	19700
22	99	2100	1.75	14.90	**BF70-../DPE18XB4**	358	5900	24000
22	85	2450	1.75	17.39	**BF70-../DPE18XB4**	358	6200	25000
22	71	2950	1.55	21.04	**BF70-../DPE18XB4**	358	6400	26300
22	61	3400	1.5	24.55	**BF70-../DPE18XB4**	358	7000	27700
22	55	3800	1.35	27.29	**BF70-../DPE18XB4**	358	7000	28400
22	46.5	4500	1.15	31.84	**BF70-../DPE18XB4**	358	7700	30000
22	40	5200	1.0	36.88	**BF70-../DPE18XB4**	358	7900	31100
22	34.5	6000	0.87	43.02	**BF70-../DPE18XB4**	358	8700	32800
22	130	1610	2.3	11.42	**BF80-../DPE18XB4**	454	8900	32200
22	90	2300	2.3	16.49	**BF80-../DPE18XB4**	454	11400	41400
22	64	3250	1.95	23.29	**BF80-../DPE18XB4**	454	11800	44900
22	49	4250	1.65	30.21	**BF80-../DPE18XB4**	454	12300	47900
22	44	4750	1.65	33.61	**BF80-../DPE18XB4**	454	11700	48400
22	39	5300	1.5	38.14	**BF80-../DPE18XB4**	454	12200	50300
22	31.5	6600	1.3	47.46	**BF80-../DPE18XB4**	454	13400	53700
22	27.5	7600	1.2	53.86	**BF80-../DPE18XB4**	454	14000	55800
22	24	8700	1.05	61.55	**BF80-../DPE18XB4**	454	14800	58100
22	21.5	9700	0.98	69.86	**BF80-../DPE18XB4**	454	15900	60600
22	18	11600	0.82	83.16	**BF80-../DPE18XB4**	454	18400	65100
22	44	4750	2.7	33.71	**BF90-../DPE18XB4**	706	11900	59300
22	39.5	5300	2.5	37.54	**BF90-../DPE18XB4**	706	12700	61500
22	32	6500	2.2	46.43	**BF90-../DPE18XB4**	706	13800	65500
22	29	7200	2.0	51.70	**BF90-../DPE18XB4**	706	14600	67800
22	23.5	8900	1.75	63.49	**BF90-../DPE18XB4**	706	15800	72000
22	21	10000	1.6	70.69	**BF90-../DPE18XB4**	706	16800	74700
22	18.5	11300	1.45	80.85	**BF90-../DPE18XB4**	706	17500	77500
22	16.5	12700	1.3	90.02	**BF90-../DPE18XB4**	706	18900	80600
22	14	15000	1.1	107.5	**BF90-../DPE18XB4**	706	22300	86900
22	12.5	16800	1.0	119.7	**BF90-../DPE18XB4**	706	24500	90800
22	11	19100	0.88	139.1	**BF90-../DPE18XB4**	706	27700	96300

30 kW

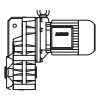

P_N	50 Hz			i	Type	m		
	n_2	M_2	f_B					
[kW]	[1/min]	[Nm]	[—]	[:1]		[kg]	[N]	[N]
30	144	1980	1.25	10.32	**BF70-../DPE20XA4**	513	4600	18700
30	123	2300	1.3	12.04	**BF70-../DPE20XA4**	513	4900	19700
30	100	2850	1.3	14.90	**BF70-../DPE20XA4**	513	5900	24000
30	86	3300	1.3	17.39	**BF70-../DPE20XA4**	513	6200	25000
30	71	4000	1.15	21.04	**BF70-../DPE20XA4**	513	6400	26300
30	61	4650	1.1	24.55	**BF70-../DPE20XA4**	513	7000	27700
30	55	5200	1.0	27.29	**BF70-../DPE20XA4**	513	7000	28400
30	46.5	6100	0.85	31.84	**BF70-../DPE20XA4**	513	7700	30000
30	130	2200	1.65	11.42	**BF80-../DPE20XA4**	609	8900	32200
30	90	3150	1.7	16.49	**BF80-../DPE20XA4**	609	11400	41400

The torques marked (*) are maximum permissible torques for service factor f_B=1,0.

30 kW

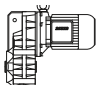

P_N	50 Hz			i	**Type**	m		
	n_2	M_2	f_B					
[kW]	[1/min]	[Nm]	[—]	[:1]		[kg]	[N]	[N]
30	64	4450	1.4	23.29	**BF80-../DPE20XA4**	609	11800	44900
30	49	5800	1.25	30.21	**BF80-../DPE20XA4**	609	12300	47900
30	44.5	6400	1.2	33.61	**BF80-../DPE20XA4**	609	11700	48400
30	39	7300	1.1	38.14	**BF80-../DPE20XA4**	609	12200	50300
30	31.5	9000	0.96	47.46	**BF80-../DPE20XA4**	609	13400	53700
30	27.5	10400	0.86	53.86	**BF80-../DPE20XA4**	609	14000	55800
30	24.5	11600	0.8	61.55	**BF80-../DPE20XA4**	609	14800	58100
30	119	2400	3.0	12.45	**BF90-../DPE20XA4**	859	8000	39700
30	86	3300	3.1	17.39	**BF90-../DPE20XA4**	859	10000	49500
30	62	4600	2.4	23.95	**BF90-../DPE20XA4**	859	11100	54300
30	44	6500	2.0	33.71	**BF90-../DPE20XA4**	859	11900	59300
30	39.5	7200	1.85	37.54	**BF90-../DPE20XA4**	859	12700	61500
30	32	8900	1.6	46.43	**BF90-../DPE20XA4**	859	13800	65500
30	29	9800	1.45	51.70	**BF90-../DPE20XA4**	859	14600	67800
30	23.5	12100	1.25	63.49	**BF90-../DPE20XA4**	859	15800	72000
30	21	13600	1.15	70.69	**BF90-../DPE20XA4**	859	16800	74700
30	18.5	15400	1.05	80.85	**BF90-../DPE20XA4**	859	17500	77500
30	16.5	17300	0.97	90.02	**BF90-../DPE20XA4**	859	18900	80600
30	14	20400	0.82	107.5	**BF90-../DPE20XA4**	859	22300	86900

37 kW

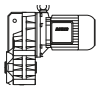

P_N	50 Hz			i	**Type**	m		
	n_2	M_2	f_B					
[kW]	[1/min]	[Nm]	[—]	[:1]		[kg]	[N]	[N]
37	144	2450	1.05	10.32	**BF70-../DPE22MA4**	569	4600	18700
37	123	2850	1.05	12.04	**BF70-../DPE22MA4**	569	4900	19700
37	100	3500	1.05	14.90	**BF70-../DPE22MA4**	569	5900	24000
37	86	4100	1.05	17.39	**BF70-../DPE22MA4**	569	6200	25000
37	130	2700	1.35	11.42	**BF80-../DPE22MA4**	665	8900	32200
37	90	3900	1.35	16.49	**BF80-../DPE22MA4**	665	11400	41400
37	64	5500	1.15	23.29	**BF80-../DPE22MA4**	665	11800	44900
37	119	2950	2.4	12.45	**BF90-../DPE22MA4**	915	8000	39700
37	86	4100	2.5	17.39	**BF90-../DPE22MA4**	915	10000	49500
37	62	5600	2.0	23.95	**BF90-../DPE22MA4**	915	11100	54300
37	44	8000	1.6	33.71	**BF90-../DPE22MA4**	915	11900	59300
37	39.5	8900	1.5	37.54	**BF90-../DPE22MA4**	915	12700	61500
37	32	11000	1.3	46.43	**BF90-../DPE22MA4**	915	13800	65500
37	29	12100	1.2	51.70	**BF90-../DPE22MA4**	915	14600	67800
37	23.5	15000	1.05	63.49	**BF90-../DPE22MA4**	915	15800	72000

The torques marked (*) are maximum permissible torques for service factor f_B=1,0.

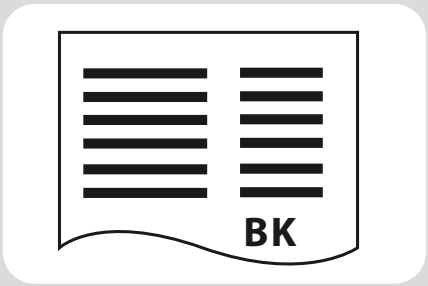

8

BK-series bevel-geared motors - Selection

Description of bevel-gear units 325
Sizes 325
Bauer service factors (f_B) for bevel-geared motors 325
Continuous operation without switching frequency Z ≤1/h 325
Switching duty 325
Bauer Service factor 325
Explanation of shock classification 326
Key to abbreviations 326
Selection tables, bevel-geared motors 326
Selection - bevel geared motors DSE - IE1 327
Selection - bevel geared motors DHE - IE2 355
Selection - bevel geared motors DPE - IE3 385

Sizes

Bauer BK-series bevel-geared motors are normally supplied in ten frame sizes and with torques of 80 to 18,500 Nm. Higher torques are available on request. The gear unit is accommodated in a sturdy cast housing

Bauer service factors (f_B) for bevel-geared motors

Of the numerous factors influencing the total loading of a gear unit, the most important include:

- Mean torque (rated torque)
- Daily operating hours
- Severity of torque peaks (shock classification)
- Frequency of torque peaks (switching duty)

These factors can be represented in a simplified and practical manner by service factors. The tables and explanations below attempt to provide an objective description of the shock classification, rather than a classification of the driven machinery. Experience has shown that, in addition to the torque shocks caused by the driven machinery (M_x/M_N), above all the power transmission components (clutches, chains etc.) plus the mass ratios play a decisive role in this.

See Bauer special imprint SD32 for more information.

Continuous operation without switching frequency Z ≤1/h

Factor f_1 for shock classification and operating time

Shock classification	Operating hours per day t_d	>4 h	>8 h	>16 h
		≤8 h	≤16 h	≤24 h
I		0.8	1.0	1.2
II		1.05	1.25	1.45
III		1.45	1.55	1.7

Switching duty

Factor f_2 for shock classification and switching frequency

Switching frequency in single- shift operation t_d ≤8 h/d

Shock classification	1 <Z ≤100	100 <Z ≤1000	1000 <Z
I	0.95	1.1	1.15
II	1.2	1,35	1.4
III	1.55	1.6	1.6

Switching frequency in multiple- shift operation t_d >8 h/d

Shock classification	1 <Z ≤100	100 <Z ≤1000	1000 <Z
I	1.3	1.45	1.5
II	1.5	1.6	1.65
III	1.75	1.8	1.8

Bauer Service factor

Bauer service factor $f_B = f_1$ or $f_B = f_2$

For example: Shock classification II for Z = 100 switching operations per hour and multiple-shift operation yields a service factor $f_B = f_2 = 1.5$

Explanation of shock classification

Shock classification I:
Uniform without shock loads. All the following requirements must be satisfied:
- FI ≤1.3
- M_x/M_N ≤1.0
- Shock-absorbing power transmission components (e.g. highly resilient, zero-play coupling, φ N ≥5°)

Shock classification II:
Moderate shock loads. At least one of the following conditions applies:
- 1.3 <FI ≤4
- 1 <M_x/M_N ≤1.6
- Shock-neutral power transmission components (e.g. gear wheels, zero- playrigid coupling or resilient coupling with φ N <5°)

Shock classification III:
Heavy shock loads. At least one of the following conditions applies:
- FI >4
- 1.6 <M_x/M_N ≤2.0
- Shock-amplifying power transmission components (e.g. coupling with play or chain drive)

Key to abbreviations

Z	Switching duty number of switching operations per hour
t_d	Daily operating time in hours (h/d)
FI	Factor of inertia FI = (J_{ext} + J_{rot})/J_{rot}
J_{ext}	Mass moment of inertia of the machine to be driven, in relation to the motor's rotor shaft (kgm²)
J_{rot}	Mass moment of inertia of the motor rotor (kgm²)
M_x	Highest impact torque above the static torque which can occur during normal operation or in emergency situations
M_N	Required static load torque for the application
M_x/M_N	Relative torque - Factor
φ N	Torsional offset of the resilient coupling under rated torque

Selection tables, bevel-geared motors

Key to abbreviations

P	Rated output
n_2	Rated speed of the output shaft
i	Gear reduction ratio
M_2	Rated torque at the output shaft
f_B	Bauer service factor
F_{RN}	Maximum permissible radial force with normal bearings
F_{RV}	Maximum permissible radial force with reinforced bearings in each case with standard solid shaft (Code -.1 and -.2)

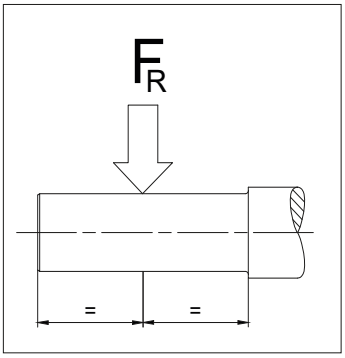

Use the selection tables to determine the size of geared motor required. The codes clearly define the Type of gear unit and output shaft (see chapter 12 "dimensional drawing bevel-geared motors").

Motor power overload protection
Motor-power ratings, particularly in conjunction with four-stage and multi-stage gear units, are more than ample in some instances. Consequently, and in much the same way as with low-power motors, rated current is not a measure of gear loading and cannot be used to protect the gear unit against overloading. It is advisable to provide gears at risk from excessive load or blockage with a protective mechanism (e. g., slip clutch, slip hub, shear pin or an alternative).

0.03 kW

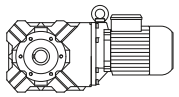

P_N	50 Hz			i	Typ	m		
	n_2	M_2	f_B					
[kW]	[1/min]	[Nm]	[—]	[:1]		[kg]	[N]	[N]
0.03	28.5	8.9	9.0	47.78	**BK06-../D04LA4**	7.6	1500	-
0.03	25	10.1	6.7	54.38	**BK06-../D04LA4**	7.6	1600	-
0.03	21.5	11.8	5.4	63.33	**BK06-../D04LA4**	7.6	1700	-
0.03	3.7	62	2.7	373.4	**BK10Z-../D04LA4**	21	7000	-
0.03	3.2	71	2.1	428.8	**BK10Z-../D04LA4**	21	7000	-
0.03	2.5	66	3.3	552.3	**BK10G06-../D04LA4**	25	7000	-
0.03	2.2	77	2.9	635.5	**BK10G06-../D04LA4**	25	7000	-
0.03	1.8	98	2.2	789.7	**BK10G06-../D04LA4**	25	7000	-
0.03	1.5	118	1.85	929.3	**BK10G06-../D04LA4**	25	7000	-
0.03	1.3	139	1.6	1112	**BK10G06-../D04LA4**	25	7000	-
0.03	1.0	184	1.2	1361	**BK10G06-../D04LA4**	25	7000	-
0.03	0.9	205	1.05	1577	**BK10G06-../D04LA4**	25	7000	-
0.03	0.7	220*	1.0	1971	**BK10G06-../D04LA4**	25	7000	-
0.03	0.6	220*	1.0	2261	**BK10G06-../D04LA4**	25	7000	-
0.03	0.55	220*	1.0	2467	**BK10G06-../D04LA4**	25	7000	-
0.03	0.48	220*	1.0	2849	**BK10G06-../D04LA4**	25	7000	-
0.03	0.44	220*	1.0	3107	**BK10G06-../D04LA4**	25	7000	-
0.03	0.39	220*	1.0	3537	**BK10G06-../D04LA4**	25	7000	-
0.03	0.33	220*	1.0	4120	**BK10G06-../D04LA4**	25	7000	-
0.03	1.6	110	3.3	891.2	**BK20G06-../D04LA4**	34	8700	9000
0.03	1.3	138	2.6	1066	**BK20G06-../D04LA4**	34	8700	9000
0.03	1.1	165	2.2	1305	**BK20G06-../D04LA4**	34	8700	9000
0.03	0.95	193	1.85	1424	**BK20G06-../D04LA4**	34	8700	9000
0.03	0.85	220	1.65	1650	**BK20G06-../D04LA4**	34	8700	9000
0.03	0.7	270	1.35	2062	**BK20G06-../D04LA4**	34	8700	9000
0.03	0.6	320	1.15	2366	**BK20G06-../D04LA4**	34	8700	9000
0.03	0.55	350	1.05	2580	**BK20G06-../D04LA4**	34	8700	9000
0.03	0.48	360*	1.0	2831	**BK20G06-../D04LA4**	34	8700	9000
0.03	0.44	360*	1.0	3088	**BK20G06-../D04LA4**	34	8700	9000
0.03	0.39	360*	1.0	3515	**BK20G06-../D04LA4**	34	8700	9000
0.03	0.33	360*	1.0	4094	**BK20G06-../D04LA4**	34	8700	9000
0.03	1.2	150	3.3	1142	**BK30G06-../D04LA4**	40	11200	12000
0.03	1.1	165	3.0	1281	**BK30G06-../D04LA4**	40	11200	12000
0.03	0.85	220	2.2	1620	**BK30G06-../D04LA4**	40	11200	12000
0.03	0.8	235	2.1	1767	**BK30G06-../D04LA4**	40	11200	12000
0.03	0.7	270	1.8	2024	**BK30G06-../D04LA4**	40	11200	12000
0.03	0.55	350	1.4	2533	**BK30G06-../D04LA4**	40	11200	12000
0.03	0.5	380	1.3	2738	**BK30G06-../D04LA4**	40	11200	12000
0.03	0.46	415	1.2	2986	**BK30G06-../D04LA4**	40	11200	12000
0.03	0.4	480	1.0	3399	**BK30G06-../D04LA4**	40	11200	12000
0.03	0.35	490*	1.0	3959	**BK30G06-../D04LA4**	40	11200	12000

0.04 kW

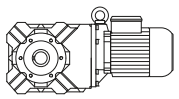

P_N	50 Hz			i	Typ	m		
	n_2	M_2	f_B					
[kW]	[1/min]	[Nm]	[—]	[:1]		[kg]	[N]	[N]
0.04	41	8.3	9.6	33.33	**BK06-../D04LA4**	7.6	1320	-
0.04	35.5	9.6	8.3	38.18	**BK06-../D04LA4**	7.6	1380	-
0.04	28.5	11.9	6.7	47.78	**BK06-../D04LA4**	7.6	1500	-
0.04	25	13.5	5.0	54.38	**BK06-../D04LA4**	7.6	1600	-
0.04	21.5	15.8	4.0	63.33	**BK06-../D04LA4**	7.6	1700	-
0.04	4.5	68	2.7	302.4	**BK10Z-../D04LA4**	21	7000	-
0.04	3.7	83	2.0	373.4	**BK10Z-../D04LA4**	21	7000	-
0.04	3.2	95	1.55	428.8	**BK10Z-../D04LA4**	21	7000	-
0.04	3.0	78	2.8	459.2	**BK10G06-../D04LA4**	25	7000	-
0.04	2.7	88	2.5	501.4	**BK10G06-../D04LA4**	25	7000	-
0.04	2.5	96	2.3	552.3	**BK10G06-../D04LA4**	25	7000	-
0.04	2.2	112	1.95	635.5	**BK10G06-../D04LA4**	25	7000	-
0.04	1.8	140	1.55	789.7	**BK10G06-../D04LA4**	25	7000	-
0.04	1.5	167	1.3	929.3	**BK10G06-../D04LA4**	25	7000	-
0.04	1.3	195	1.15	1112	**BK10G06-../D04LA4**	25	7000	-

The torques marked (*) are maximum permissible torques for service factor f_B=1.0.

0.04 kW

P_N	50 Hz			i	Typ	m		
	n_2	M_2	f_B					
[kW]	[1/min]	[Nm]	[—]	[:1]		[kg]	[N]	[N]
0.04	1.0	255	0.86	1361	**BK10G06-../D04LA4**	25	7000	-
0.04	2.2	110	3.3	630.0	**BK20G06-../D04LA4**	34	8700	9000
0.04	1.8	138	2.6	757.0	**BK20G06-../D04LA4**	34	8700	9000
0.04	1.6	156	2.3	891.2	**BK20G06-../D04LA4**	34	8700	9000
0.04	1.3	195	1.85	1066	**BK20G06-../D04LA4**	34	8700	9000
0.04	1.1	230	1.55	1305	**BK20G06-../D04LA4**	34	8700	9000
0.04	0.95	270	1.35	1424	**BK20G06-../D04LA4**	34	8700	9000
0.04	0.85	305	1.2	1650	**BK20G06-../D04LA4**	34	8700	9000
0.04	1.7	147	3.3	810.9	**BK30G06-../D04LA4**	40	11200	12000
0.04	1.5	167	2.9	954.1	**BK30G06-../D04LA4**	40	11200	12000
0.04	1.2	210	2.3	1142	**BK30G06-../D04LA4**	40	11200	12000
0.04	1.1	230	2.1	1281	**BK30G06-../D04LA4**	40	11200	12000
0.04	0.85	305	1.6	1620	**BK30G06-../D04LA4**	40	11200	12000
0.04	0.8	325	1.5	1767	**BK30G06-../D04LA4**	40	11200	12000
0.04	0.7	375	1.3	2024	**BK30G06-../D04LA4**	40	11200	12000
0.04	0.55	480	1.0	2533	**BK30G06-../D04LA4**	40	11200	12000

0.06 kW

P_N	50 Hz			i	Typ	m		
	n_2	M_2	f_B					
[kW]	[1/min]	[Nm]	[—]	[:1]		[kg]	[N]	[N]
0.06	63	8.1	9.9	21.54	**BK06-../D04LA4**	7.6	1150	-
0.06	52	9.9	8.1	26.36	**BK06-../D04LA4**	7.6	1230	-
0.06	41	12.5	6.4	33.33	**BK06-../D04LA4**	7.6	1320	-
0.06	35.5	14.5	5.5	38.18	**BK06-../D04LA4**	7.6	1380	-
0.06	28.5	17.8	4.5	47.78	**BK06-../D04LA4**	7.6	1500	-
0.06	25	20	3.4	54.38	**BK06-../D04LA4**	7.6	1600	-
0.06	21.5	23.5	2.7	63.33	**BK06-../D04LA4**	7.6	1700	-
0.06	11.5	42	3.3	120.3	**BK10Z-../D06LA4**	24	7000	-
0.06	9.5	50	3.3	143.2	**BK10Z-../D06LA4**	24	7000	-
0.06	6.6	71	2.8	204.7	**BK10Z-../D06LA4**	24	7000	-
0.06	5.3	88	2.3	257.9	**BK10Z-../D06LA4**	24	7000	-
0.06	4.5	103	1.8	302.4	**BK10Z-../D06LA4**	24	7000	-
0.06	3.7	125	1.3	373.4	**BK10Z-../D06LA4**	24	7000	-
0.06	3.2	143	1.05	428.8	**BK10Z-../D06LA4**	24	7000	-
0.06	3.0	129	1.7	459.2	**BK10G06-../D06LA4**	28	7000	-
0.06	2.7	144	1.55	501.4	**BK10G06-../D06LA4**	28	7000	-
0.06	2.5	157	1.4	552.3	**BK10G06-../D06LA4**	28	7000	-
0.06	2.2	180	1.2	635.5	**BK10G06-../D06LA4**	28	7000	-
0.06	1.8	220	1.0	789.7	**BK10G06-../D06LA4**	28	7000	-
0.06	1.5	265	0.83	929.3	**BK10G06-../D06LA4**	28	7000	-
0.06	4.6	100	3.1	298.2	**BK20Z-../D06LA4**	34	8700	9000
0.06	3.7	123	2.4	367.7	**BK20Z-../D06LA4**	34	8700	9000
0.06	3.2	120	3.0	429.7	**BK20G06-../D06LA4**	38	8700	9000
0.06	2.9	133	2.7	480.4	**BK20G06-../D06LA4**	38	8700	9000
0.06	2.6	149	2.4	524.5	**BK20G06-../D06LA4**	38	8700	9000
0.06	2.2	178	2.0	630.0	**BK20G06-../D06LA4**	38	8700	9000
0.06	1.8	220	1.65	757.0	**BK20G06-../D06LA4**	38	8700	9000
0.06	1.6	245	1.45	891.2	**BK20G06-../D06LA4**	38	8700	9000
0.06	1.3	305	1.2	1066	**BK20G06-../D06LA4**	38	8700	9000
0.06	1.1	360	1.0	1305	**BK20G06-../D06LA4**	38	8700	9000
0.06	3.6	128	3.1	380.7	**BK30Z-../D06LA4**	41	11200	12000
0.06	3.1	147	2.6	441.3	**BK30Z-../D06LA4**	41	11200	12000
0.06	2.4	163	3.0	567.0	**BK30G06-../D06LA4**	44	11200	12000
0.06	2.1	188	2.6	652.5	**BK30G06-../D06LA4**	44	11200	12000
0.06	1.9	210	2.3	743.0	**BK30G06-../D06LA4**	44	11200	12000
0.06	1.7	235	2.1	810.9	**BK30G06-../D06LA4**	44	11200	12000
0.06	1.5	265	1.85	954.1	**BK30G06-../D06LA4**	44	11200	12000
0.06	1.2	330	1.5	1142	**BK30G06-../D06LA4**	44	11200	12000
0.06	1.1	360	1.35	1281	**BK30G06-../D06LA4**	44	11200	12000

The torques marked (*) are maximum permissible torques for service factor f_B=1.0.

0.06 kW

P_N	50 Hz			i	Typ	m		
	n_2	M_2	f_B					
[kW]	[1/min]	[Nm]	[—]	[:1]		[kg]	[N]	[N]
0.06	0.85	475	1.05	1620	**BK30G06-../D06LA4**	44	11200	12000
0.06	1.2	290	2.9	1189	**BK40G10-../D06LA4**	68	11700	17000
0.06	0.95	380	2.2	1428	**BK40G10-../D06LA4**	68	11700	17000
0.06	0.8	465	1.85	1798	**BK40G10-../D06LA4**	68	11700	17000
0.06	0.65	580	1.45	2108	**BK40G10-../D06LA4**	68	11700	17000
0.06	0.6	640	1.35	2350	**BK40G10-../D06LA4**	68	11700	17000
0.06	0.55	700	1.2	2604	**BK40G10-../D06LA4**	68	11700	17000
0.06	1.0	370	3.1	1398	**BK50G10-../D06LA4**	96	14100	111000
0.06	0.9	415	2.8	1549	**BK50G10-../D06LA4**	96	14100	111000
0.06	0.75	510	2.3	1816	**BK50G10-../D06LA4**	96	14100	111000
0.06	0.7	550	2.1	2024	**BK50G10-../D06LA4**	96	14100	111000
0.06	0.6	630	1.85	2450	**BK50G10-../D06LA4**	96	14100	111000
0.06	0.5	760	1.5	2730	**BK50G10-../D06LA4**	96	14100	111000
0.06	0.45	850	1.35	3025	**BK50G10-../D06LA4**	96	14100	111000
0.06	0.39	960	1.2	3492	**BK50G10-../D06LA4**	96	14100	111000
0.06	0.35	1080	1.05	3870	**BK50G10-../D06LA4**	96	14100	111000
0.06	0.39	920	2.7	3533	**BK60G20-../D06LA4**	123	16600	34000
0.06	0.32	1240	2.0	4239	**BK60G20-../D06LA4**	123	16600	34000
0.06	0.27	1570	1.6	5072	**BK60G20-../D06LA4**	123	16600	34000
0.06	0.24	1830	1.35	5721	**BK60G20-../D06LA4**	123	16600	34000
0.06	0.21	2150	1.15	6565	**BK60G20-../D06LA4**	123	16600	34000
0.06	0.19	2450	1.0	7291	**BK60G20-../D06LA4**	123	16600	34000
0.06	0.21	2000	2.9	6504	**BK70G20-../D06LA4**	201	24100	50000
0.06	0.17	2650	2.2	8149	**BK70G20-../D06LA4**	201	24100	50000
0.06	0.15	3100	1.85	9351	**BK70G20-../D06LA4**	201	24100	50000

0.09 kW

P_N	50 Hz			i	Typ	m		
	n_2	M_2	f_B					
[kW]	[1/min]	[Nm]	[—]	[:1]		[kg]	[N]	[N]
0.09	89	8.7	9.2	15.29	**BK06-../D04LA4**	7.6	1020	-
0.09	75	10.3	7.8	18.00	**BK06-../D04LA4**	7.6	1080	-
0.09	63	12.2	6.6	21.54	**BK06-../D04LA4**	7.6	1150	-
0.09	52	14.8	5.4	26.36	**BK06-../D04LA4**	7.6	1230	-
0.09	41	18.8	4.3	33.33	**BK06-../D04LA4**	7.6	1320	-
0.09	35.5	21.5	3.7	38.18	**BK06-../D04LA4**	7.6	1380	-
0.09	28.5	26.5	3.0	47.78	**BK06-../D04LA4**	7.6	1500	-
0.09	25	30.5	2.2	54.38	**BK06-../D04LA4**	7.6	1600	-
0.09	21.5	35.5	1.8	63.33	**BK06-../D04LA4**	7.6	1700	-
0.09	13.5	54	2.9	102.5	**BK10-../D06LA4**	23	7000	-
0.09	11.5	63	2.2	120.3	**BK10Z-../D06LA4**	24	7000	-
0.09	9.5	75	2.2	143.2	**BK10Z-../D06LA4**	24	7000	-
0.09	8.0	89	2.2	170.6	**BK10Z-../D06LA4**	24	7000	-
0.09	6.6	106	1.9	204.7	**BK10Z-../D06LA4**	24	7000	-
0.09	5.3	132	1.5	257.9	**BK10Z-../D06LA4**	24	7000	-
0.09	4.5	154	1.2	302.4	**BK10Z-../D06LA4**	24	7000	-
0.09	3.7	188	0.88	373.4	**BK10Z-../D06LA4**	24	7000	-
0.09	3.3	186	1.2	410.8	**BK10G06-../D06LA4**	28	7000	-
0.09	3.0	205	1.05	459.2	**BK10G06-../D06LA4**	28	7000	-
0.09	2.7	225	0.98	501.4	**BK10G06-../D06LA4**	28	7000	-
0.09	2.5	245	0.9	552.3	**BK10G06-../D06LA4**	28	7000	-
0.09	6.6	106	3.1	207.5	**BK20Z-../D06LA4**	34	8700	9000
0.09	5.2	135	2.4	259.9	**BK20Z-../D06LA4**	34	8700	9000
0.09	4.6	151	2.1	298.2	**BK20Z-../D06LA4**	34	8700	9000
0.09	3.7	185	1.6	367.7	**BK20Z-../D06LA4**	34	8700	9000
0.09	3.2	192	1.9	429.7	**BK20G06-../D06LA4**	38	8700	9000
0.09	2.9	210	1.7	480.4	**BK20G06-../D06LA4**	38	8700	9000
0.09	2.6	235	1.55	524.5	**BK20G06-../D06LA4**	38	8700	9000
0.09	2.2	280	1.3	630.0	**BK20G06-../D06LA4**	38	8700	9000

The torques marked (*) are maximum permissible torques for service factor f_B=1.0.

0.09 kW

P_N	50 Hz			i	Typ	m		
	n_2	M_2	f_B					
[kW]	[1/min]	[Nm]	[—]	[:1]		[kg]	[N]	[N]
0.09	1.8	345	1.05	757.0	**BK20G06-../D06LA4**	38	8700	9000
0.09	1.6	385	0.94	891.2	**BK20G06-../D06LA4**	38	8700	9000
0.09	4.4	160	2.4	308.3	**BK30Z-../D06LA4**	41	11200	12000
0.09	3.6	193	2.1	380.7	**BK30Z-../D06LA4**	41	11200	12000
0.09	3.1	220	1.75	441.3	**BK30Z-../D06LA4**	41	11200	12000
0.09	2.9	210	2.3	471.5	**BK30G06-../D06LA4**	44	11200	12000
0.09	2.4	255	1.9	567.0	**BK30G06-../D06LA4**	44	11200	12000
0.09	2.1	295	1.65	652.5	**BK30G06-../D06LA4**	44	11200	12000
0.09	1.9	325	1.5	743.0	**BK30G06-../D06LA4**	44	11200	12000
0.09	1.7	365	1.35	810.9	**BK30G06-../D06LA4**	44	11200	12000
0.09	1.5	410	1.2	954.1	**BK30G06-../D06LA4**	44	11200	12000
0.09	1.2	510	0.96	1142	**BK30G06-../D06LA4**	44	11200	12000
0.09	1.1	560	0.88	1281	**BK30G06-../D06LA4**	44	11200	12000
0.09	3.9	178	3.3	348.7	**BK40Z-../D06LA4**	64	11700	17000
0.09	3.2	210	2.7	430.0	**BK40Z-../D06LA4**	64	11700	17000
0.09	1.8	295	2.9	756.7	**BK40G10-../D06LA4**	68	11700	17000
0.09	1.7	320	2.7	838.4	**BK40G10-../D06LA4**	68	11700	17000
0.09	1.4	400	2.1	998.3	**BK40G10-../D06LA4**	68	11700	17000
0.09	1.2	475	1.8	1189	**BK40G10-../D06LA4**	68	11700	17000
0.09	0.95	610	1.4	1428	**BK40G10-../D06LA4**	68	11700	17000
0.09	0.8	730	1.15	1798	**BK40G10-../D06LA4**	68	11700	17000
0.09	1.6	350	3.3	859.8	**BK50G10-../D06LA4**	96	14100	111000
0.09	1.4	410	2.8	1024	**BK50G10-../D06LA4**	96	14100	111000
0.09	1.1	530	2.2	1230	**BK50G10-../D06LA4**	96	14100	111000
0.09	1.0	590	1.95	1398	**BK50G10-../D06LA4**	96	14100	111000
0.09	0.9	660	1.75	1549	**BK50G10-../D06LA4**	96	14100	111000
0.09	0.75	790	1.45	1816	**BK50G10-../D06LA4**	96	14100	111000
0.09	0.7	850	1.35	2024	**BK50G10-../D06LA4**	96	14100	111000
0.09	0.6	980	1.15	2450	**BK50G10-../D06LA4**	96	14100	111000
0.09	0.7	750	3.3	2010	**BK60G20-../D06LA4**	123	16600	34000
0.09	0.6	930	2.7	2371	**BK60G20-../D06LA4**	123	16600	34000
0.09	0.5	1180	2.1	2733	**BK60G20-../D06LA4**	123	16600	34000
0.09	0.45	1360	1.85	3036	**BK60G20-../D06LA4**	123	16600	34000
0.09	0.39	1650	1.5	3533	**BK60G20-../D06LA4**	123	16600	34000
0.09	0.32	2100	1.2	4239	**BK60G20-../D06LA4**	123	16600	34000
0.09	0.35	1750	3.3	3894	**BK70G20-../D06LA4**	201	24100	50000
0.09	0.3	2150	2.7	4531	**BK70G20-../D06LA4**	201	24100	50000
0.09	0.25	2700	2.1	5436	**BK70G20-../D06LA4**	201	24100	50000
0.09	0.21	3350	1.7	6504	**BK70G20-../D06LA4**	201	24100	50000
0.09	0.17	4350	1.3	8149	**BK70G20-../D06LA4**	201	24100	50000
0.09	0.15	5000	1.15	9351	**BK70G20-../D06LA4**	201	24100	50000

0.11 kW

P_N	50 Hz			i	Typ	m		
	n_2	M_2	f_B					
[kW]	[1/min]	[Nm]	[—]	[:1]		[kg]	[N]	[N]
0.11	116	8.3	9.6	11.67	**BK06-../D04LA4**	7.6	930	-
0.11	89	10.7	7.5	15.29	**BK06-../D04LA4**	7.6	1020	-
0.11	75	12.6	6.3	18.00	**BK06-../D04LA4**	7.6	1080	-
0.11	63	15	5.3	21.54	**BK06-../D04LA4**	7.6	1150	-
0.11	52	18.1	4.4	26.36	**BK06-../D04LA4**	7.6	1230	-
0.11	41	23	3.5	33.33	**BK06-../D04LA4**	7.6	1320	-
0.11	35.5	26.5	3.0	38.18	**BK06-../D04LA4**	7.6	1380	-
0.11	28.5	32.5	2.5	47.78	**BK06-../D04LA4**	7.6	1500	-
0.11	25	37	1.85	54.38	**BK06-../D04LA4**	7.6	1600	-
0.11	21.5	43	1.5	63.33	**BK06-../D04LA4**	7.6	1700	-
0.11	11.5	77	1.8	120.3	**BK10Z-../D04LA4**	21	7000	-
0.11	9.5	92	1.75	143.2	**BK10Z-../D04LA4**	21	7000	-
0.11	8.0	108	1.85	170.6	**BK10Z-../D04LA4**	21	7000	-

The torques marked (*) are maximum permissible torques for service factor f_B=1.0.

0.11 kW

P_N	50 Hz			i	Typ	m		
	n_2	M_2	f_B					
[kW]	[1/min]	[Nm]	[—]	[:1]		[kg]	[N]	[N]
0.11	6.6	130	1.55	204.7	**BK10Z-../D04LA4**	21	7000	-
0.11	5.3	162	1.25	257.9	**BK10Z-../D04LA4**	21	7000	-
0.11	4.5	189	0.97	302.4	**BK10Z-../D04LA4**	21	7000	-
0.11	4.0	191	1.15	343.2	**BK10G06-../D04LA4**	25	7000	-
0.11	3.3	230	0.96	410.8	**BK10G06-../D04LA4**	25	7000	-
0.11	3.0	255	0.86	459.2	**BK10G06-../D04LA4**	25	7000	-
0.11	2.7	220*	1.0	501.4	**BK10G06-../D04LA4**	25	7000	-
0.11	2.5	220*	1.0	552.3	**BK10G06-../D04LA4**	25	7000	-
0.11	2.2	220*	1.0	635.5	**BK10G06-../D04LA4**	25	7000	-
0.11	1.8	220*	1.0	789.7	**BK10G06-../D04LA4**	25	7000	-
0.11	1.5	220*	1.0	929.3	**BK10G06-../D04LA4**	25	7000	-
0.11	1.3	220*	1.0	1112	**BK10G06-../D04LA4**	25	7000	-
0.11	1.0	220*	1.0	1361	**BK10G06-../D04LA4**	25	7000	-
0.11	0.9	220*	1.0	1577	**BK10G06-../D04LA4**	25	7000	-
0.11	0.7	220*	1.0	1971	**BK10G06-../D04LA4**	25	7000	-
0.11	0.6	220*	1.0	2261	**BK10G06-../D04LA4**	25	7000	-
0.11	0.55	220*	1.0	2467	**BK10G06-../D04LA4**	25	7000	-
0.11	0.48	220*	1.0	2849	**BK10G06-../D04LA4**	25	7000	-
0.11	0.44	220*	1.0	3107	**BK10G06-../D04LA4**	25	7000	-
0.11	0.39	220*	1.0	3537	**BK10G06-../D04LA4**	25	7000	-
0.11	0.33	220*	1.0	4120	**BK10G06-../D04LA4**	25	7000	-
0.11	7.8	111	3.0	173.4	**BK20Z-../D04LA4**	31	8700	9000
0.11	6.6	130	2.5	207.5	**BK20Z-../D04LA4**	31	8700	9000
0.11	5.2	165	2.0	259.9	**BK20Z-../D04LA4**	31	8700	9000
0.11	4.6	184	1.7	298.2	**BK20Z-../D04LA4**	31	8700	9000
0.11	3.7	225	1.3	367.7	**BK20Z-../D04LA4**	31	8700	9000
0.11	3.2	235	1.55	429.7	**BK20G06-../D04LA4**	34	8700	9000
0.11	2.9	260	1.4	480.4	**BK20G06-../D04LA4**	34	8700	9000
0.11	2.6	295	1.2	524.5	**BK20G06-../D04LA4**	34	8700	9000
0.11	2.2	345	1.05	630.0	**BK20G06-../D04LA4**	34	8700	9000
0.11	1.8	425	0.85	757.0	**BK20G06-../D04LA4**	34	8700	9000
0.11	1.6	360*	1.0	891.2	**BK20G06-../D04LA4**	34	8700	9000
0.11	1.3	360*	1.0	1066	**BK20G06-../D04LA4**	34	8700	9000
0.11	1.1	360*	1.0	1305	**BK20G06-../D04LA4**	34	8700	9000
0.11	0.95	360*	1.0	1424	**BK20G06-../D04LA4**	34	8700	9000
0.11	0.85	360*	1.0	1650	**BK20G06-../D04LA4**	34	8700	9000
0.11	0.7	360*	1.0	2062	**BK20G06-../D04LA4**	34	8700	9000
0.11	0.6	360*	1.0	2366	**BK20G06-../D04LA4**	34	8700	9000
0.11	0.55	360*	1.0	2580	**BK20G06-../D04LA4**	34	8700	9000
0.11	0.48	360*	1.0	2831	**BK20G06-../D04LA4**	34	8700	9000
0.11	0.44	360*	1.0	3088	**BK20G06-../D04LA4**	34	8700	9000
0.11	0.39	360*	1.0	3515	**BK20G06-../D04LA4**	34	8700	9000
0.11	0.33	360*	1.0	4094	**BK20G06-../D04LA4**	34	8700	9000
0.11	2.9	260	1.9	471.5	**BK30G06-../D04LA4**	40	11200	12000
0.11	2.4	320	1.55	567.0	**BK30G06-../D04LA4**	40	11200	12000
0.11	2.1	365	1.35	652.5	**BK30G06-../D04LA4**	40	11200	12000
0.11	1.9	405	1.2	743.0	**BK30G06-../D04LA4**	40	11200	12000
0.11	1.7	450	1.1	810.9	**BK30G06-../D04LA4**	40	11200	12000
0.11	1.5	510	0.96	954.1	**BK30G06-../D04LA4**	40	11200	12000
0.11	1.2	490*	1.0	1142	**BK30G06-../D04LA4**	40	11200	12000
0.11	1.1	490*	1.0	1281	**BK30G06-../D04LA4**	40	11200	12000
0.11	0.85	490*	1.0	1620	**BK30G06-../D04LA4**	40	11200	12000
0.11	0.8	490*	1.0	1767	**BK30G06-../D04LA4**	40	11200	12000
0.11	0.7	490*	1.0	2024	**BK30G06-../D04LA4**	40	11200	12000
0.11	0.55	490*	1.0	2533	**BK30G06-../D04LA4**	40	11200	12000
0.11	0.5	490*	1.0	2738	**BK30G06-../D04LA4**	40	11200	12000
0.11	0.46	490*	1.0	2986	**BK30G06-../D04LA4**	40	11200	12000
0.11	0.4	490*	1.0	3399	**BK30G06-../D04LA4**	40	11200	12000
0.11	0.35	490*	1.0	3959	**BK30G06-../D04LA4**	40	11200	12000

The torques marked (*) are maximum permissible torques for service factor f_B=1.0.

0.12 kW

P_N	50 Hz			i	Typ	m		
	n_2	M_2	f_B					
[kW]	[1/min]	[Nm]	[—]	[:1]		[kg]	[N]	[N]
0.12	116	9.0	8.9	11.67	**BK06-../DSE04LA4**	7.6	930	-
0.12	89	11.7	6.8	15.29	**BK06-../DSE04LA4**	7.6	1020	-
0.12	75	13.7	5.8	18.00	**BK06-../DSE04LA4**	7.6	1080	-
0.12	63	16.3	4.9	21.54	**BK06-../DSE04LA4**	7.6	1150	-
0.12	52	19.8	4.0	26.36	**BK06-../DSE04LA4**	7.6	1230	-
0.12	41	25	3.2	33.33	**BK06-../DSE04LA4**	7.6	1320	-
0.12	35.5	29	2.8	38.18	**BK06-../DSE04LA4**	7.6	1380	-
0.12	28.5	35.5	2.3	47.78	**BK06-../DSE04LA4**	7.6	1500	-
0.12	25	40.5	1.7	54.38	**BK06-../DSE04LA4**	7.6	1600	-
0.12	21.5	47	1.35	63.33	**BK06-../DSE04LA4**	7.6	1700	-
0.12	11.5	84	1.65	120.3	**BK10Z-../DSE04LA4**	21	7000	-
0.12	9.5	101	1.6	143.2	**BK10Z-../DSE04LA4**	21	7000	-
0.12	8.0	118	1.7	170.6	**BK10Z-../DSE04LA4**	21	7000	-
0.12	6.6	142	1.4	204.7	**BK10Z-../DSE04LA4**	21	7000	-
0.12	5.3	177	1.15	257.9	**BK10Z-../DSE04LA4**	21	7000	-
0.12	4.5	205	0.9	302.4	**BK10Z-../DSE04LA4**	21	7000	-
0.12	4.0	210	1.05	343.2	**BK10G06-../DSE04LA4**	25	7000	-
0.12	3.3	255	0.86	410.8	**BK10G06-../DSE04LA4**	25	7000	-
0.12	3.0	220*	1.0	459.2	**BK10G06-../DSE04LA4**	25	7000	-
0.12	2.7	220*	1.0	501.4	**BK10G06-../DSE04LA4**	25	7000	-
0.12	2.5	220*	1.0	552.3	**BK10G06-../DSE04LA4**	25	7000	-
0.12	2.2	220*	1.0	635.5	**BK10G06-../DSE04LA4**	25	7000	-
0.12	1.8	220*	1.0	789.7	**BK10G06-../DSE04LA4**	25	7000	-
0.12	1.5	220*	1.0	929.3	**BK10G06-../DSE04LA4**	25	7000	-
0.12	1.3	220*	1.0	1112	**BK10G06-../DSE04LA4**	25	7000	-
0.12	1.0	220*	1.0	1361	**BK10G06-../DSE04LA4**	25	7000	-
0.12	0.9	220*	1.0	1577	**BK10G06-../DSE04LA4**	25	7000	-
0.12	0.7	220*	1.0	1971	**BK10G06-../DSE04LA4**	25	7000	-
0.12	0.6	220*	1.0	2261	**BK10G06-../DSE04LA4**	25	7000	-
0.12	0.55	220*	1.0	2467	**BK10G06-../DSE04LA4**	25	7000	-
0.12	0.48	220*	1.0	2849	**BK10G06-../DSE04LA4**	25	7000	-
0.12	0.44	220*	1.0	3107	**BK10G06-../DSE04LA4**	25	7000	-
0.12	0.39	220*	1.0	3537	**BK10G06-../DSE04LA4**	25	7000	-
0.12	0.33	220*	1.0	4120	**BK10G06-../DSE04LA4**	25	7000	-
0.12	14	70	3.3	96.99	**BK20Z-../DSE04LA4**	31	8700	9000
0.12	9.4	102	3.2	144.5	**BK20Z-../DSE04LA4**	31	8700	9000
0.12	7.8	121	2.7	173.4	**BK20Z-../DSE04LA4**	31	8700	9000
0.12	6.6	142	2.3	207.5	**BK20Z-../DSE04LA4**	31	8700	9000
0.12	5.2	180	1.85	259.9	**BK20Z-../DSE04LA4**	31	8700	9000
0.12	4.6	200	1.55	298.2	**BK20Z-../DSE04LA4**	31	8700	9000
0.12	3.7	245	1.2	367.7	**BK20Z-../DSE04LA4**	31	8700	9000
0.12	3.2	260	1.4	429.7	**BK20G06-../DSE04LA4**	34	8700	9000
0.12	2.9	290	1.25	480.4	**BK20G06-../DSE04LA4**	34	8700	9000
0.12	2.6	320	1.15	524.5	**BK20G06-../DSE04LA4**	34	8700	9000
0.12	2.2	380	0.95	630.0	**BK20G06-../DSE04LA4**	34	8700	9000
0.12	1.8	360*	1.0	757.0	**BK20G06-../DSE04LA4**	34	8700	9000
0.12	1.6	360*	1.0	891.2	**BK20G06-../DSE04LA4**	34	8700	9000
0.12	1.3	360*	1.0	1066	**BK20G06-../DSE04LA4**	34	8700	9000
0.12	1.1	360*	1.0	1305	**BK20G06-../DSE04LA4**	34	8700	9000
0.12	0.95	360*	1.0	1424	**BK20G06-../DSE04LA4**	34	8700	9000
0.12	0.85	360*	1.0	1650	**BK20G06-../DSE04LA4**	34	8700	9000
0.12	0.7	360*	1.0	2062	**BK20G06-../DSE04LA4**	34	8700	9000
0.12	0.6	360*	1.0	2366	**BK20G06-../DSE04LA4**	34	8700	9000
0.12	0.55	360*	1.0	2580	**BK20G06-../DSE04LA4**	34	8700	9000
0.12	0.48	360*	1.0	2831	**BK20G06-../DSE04LA4**	34	8700	9000
0.12	0.44	360*	1.0	3088	**BK20G06-../DSE04LA4**	34	8700	9000
0.12	0.39	360*	1.0	3515	**BK20G06-../DSE04LA4**	34	8700	9000
0.12	0.33	360*	1.0	4094	**BK20G06-../DSE04LA4**	34	8700	9000
0.12	2.9	290	1.7	471.5	**BK30G06-../DSE04LA4**	40	11200	12000
0.12	2.4	350	1.4	567.0	**BK30G06-../DSE04LA4**	40	11200	12000
0.12	2.1	400	1.25	652.5	**BK30G06-../DSE04LA4**	40	11200	12000
0.12	1.9	445	1.1	743.0	**BK30G06-../DSE04LA4**	40	11200	12000
0.12	1.7	495	0.99	810.9	**BK30G06-../DSE04LA4**	40	11200	12000
0.12	1.5	560	0.88	954.1	**BK30G06-../DSE04LA4**	40	11200	12000
0.12	1.2	490*	1.0	1142	**BK30G06-../DSE04LA4**	40	11200	12000
0.12	1.1	490*	1.0	1281	**BK30G06-../DSE04LA4**	40	11200	12000
0.12	0.85	490*	1.0	1620	**BK30G06-../DSE04LA4**	40	11200	12000

The torques marked (*) are maximum permissible torques for service factor f_B=1.0.

0.12 kW

P_N	50 Hz			i	Typ	m		
	n_2	M_2	f_B					
[kW]	[1/min]	[Nm]	[—]	[:1]		[kg]	[N]	[N]
0.12	0.8	490*	1.0	1767	**BK30G06-../DSE04LA4**	40	11200	12000
0.12	0.7	490*	1.0	2024	**BK30G06-../DSE04LA4**	40	11200	12000
0.12	0.55	490*	1.0	2533	**BK30G06-../DSE04LA4**	40	11200	12000
0.12	0.5	490*	1.0	2738	**BK30G06-../DSE04LA4**	40	11200	12000
0.12	0.46	490*	1.0	2986	**BK30G06-../DSE04LA4**	40	11200	12000
0.12	0.4	490*	1.0	3399	**BK30G06-../DSE04LA4**	40	11200	12000
0.12	0.35	490*	1.0	3959	**BK30G06-../DSE04LA4**	40	11200	12000

0.18 kW

P_N	50 Hz			i	Typ	m		
	n_2	M_2	f_B					
[kW]	[1/min]	[Nm]	[—]	[:1]		[kg]	[N]	[N]
0.18	140	11.2	7.1	9.71	**BK06-../DSE05LA4**	9.5	880	-
0.18	116	13.6	5.9	11.67	**BK06-../DSE05LA4**	9.5	930	-
0.18	89	17.5	4.6	15.29	**BK06-../DSE05LA4**	9.5	1020	-
0.18	75	20.5	3.9	18.00	**BK06-../DSE05LA4**	9.5	1080	-
0.18	63	24.5	3.3	21.54	**BK06-../DSE05LA4**	9.5	1150	-
0.18	52	29.5	2.7	26.36	**BK06-../DSE05LA4**	9.5	1230	-
0.18	41	37.5	2.1	33.33	**BK06-../DSE05LA4**	9.5	1320	-
0.18	35.5	43.5	1.85	38.18	**BK06-../DSE05LA4**	9.5	1380	-
0.18	28.5	53	1.5	47.78	**BK06-../DSE05LA4**	9.5	1500	-
0.18	25	61	1.1	54.38	**BK06-../DSE05LA4**	9.5	1600	-
0.18	21.5	71	0.89	63.33	**BK06-../DSE05LA4**	9.5	1700	-
0.18	22	69	2.9	61.68	**BK10-../DSE06LA4**	23	7000	-
0.18	19	79	2.5	72.31	**BK10-../DSE06LA4**	23	7000	-
0.18	15.5	96	1.85	89.30	**BK10-../DSE06LA4**	23	7000	-
0.18	13.5	108	1.45	102.5	**BK10-../DSE06LA4**	23	7000	-
0.18	11.5	127	1.1	120.3	**BK10Z-../DSE06LA4**	24	7000	-
0.18	9.5	151	1.1	143.2	**BK10Z-../DSE06LA4**	24	7000	-
0.18	8.0	178	1.1	170.6	**BK10Z-../DSE06LA4**	24	7000	-
0.18	6.6	210	0.95	204.7	**BK10Z-../DSE06LA4**	24	7000	-
0.18	12.5	118	2.7	108.6	**BK20-../DSE06LA4**	33	8700	9000
0.18	11	132	2.5	124.2	**BK20Z-../DSE06LA4**	34	8700	9000
0.18	9.4	153	2.2	144.5	**BK20Z-../DSE06LA4**	34	8700	9000
0.18	7.8	182	1.8	173.4	**BK20Z-../DSE06LA4**	34	8700	9000
0.18	6.6	210	1.55	207.5	**BK20Z-../DSE06LA4**	34	8700	9000
0.18	5.2	270	1.2	259.9	**BK20Z-../DSE06LA4**	34	8700	9000
0.18	4.6	300	1.05	298.2	**BK20Z-../DSE06LA4**	34	8700	9000
0.18	3.8	340	1.05	359.1	**BK20G06-../DSE06LA4**	38	8700	9000
0.18	3.2	405	0.89	429.7	**BK20G06-../DSE06LA4**	38	8700	9000
0.18	2.9	445	0.81	480.4	**BK20G06-../DSE06LA4**	38	8700	9000
0.18	9.4	153	2.9	145.1	**BK30Z-../DSE06LA4**	41	11200	12000
0.18	7.4	192	2.3	184.8	**BK30Z-../DSE06LA4**	41	11200	12000
0.18	6.3	220	2.0	216.5	**BK30Z-../DSE06LA4**	41	11200	12000
0.18	5.3	265	1.7	255.3	**BK30Z-../DSE06LA4**	41	11200	12000
0.18	4.4	320	1.2	308.3	**BK30Z-../DSE06LA4**	41	11200	12000
0.18	3.6	385	1.05	380.7	**BK30Z-../DSE06LA4**	41	11200	12000
0.18	3.1	440	0.87	441.3	**BK30Z-../DSE06LA4**	41	11200	12000
0.18	2.9	445	1.1	471.5	**BK30G06-../DSE06LA4**	44	11200	12000
0.18	2.4	540	0.91	567.0	**BK30G06-../DSE06LA4**	44	11200	12000
0.18	2.1	610	0.8	652.5	**BK30G06-../DSE06LA4**	44	11200	12000
0.18	5.5	250	3.1	246.6	**BK40Z-../DSE06LA4**	64	11700	17000
0.18	4.7	295	2.3	289.8	**BK40Z-../DSE06LA4**	64	11700	17000
0.18	3.9	355	1.65	348.7	**BK40Z-../DSE06LA4**	64	11700	17000
0.18	3.2	425	1.35	430.0	**BK40Z-../DSE06LA4**	64	11700	17000
0.18	2.8	420	2.0	487.3	**BK40G10-../DSE06LA4**	68	11700	17000
0.18	2.5	470	1.8	540.0	**BK40G10-../DSE06LA4**	68	11700	17000
0.18	2.1	560	1.5	660.2	**BK40G10-../DSE06LA4**	68	11700	17000
0.18	1.8	660	1.3	756.7	**BK40G10-../DSE06LA4**	68	11700	17000
0.18	1.7	710	1.2	838.4	**BK40G10-../DSE06LA4**	68	11700	17000
0.18	1.4	870	0.98	998.3	**BK40G10-../DSE06LA4**	68	11700	17000

The torques marked (*) are maximum permissible torques for service factor f_B=1.0.

0.18 kW

P_N	50 Hz			i	Typ	m		
	n_2	M_2	f_B					
[kW]	[1/min]	[Nm]	[—]	[:1]		[kg]	[N]	[N]
0.18	1.2	1020	0.83	1189	**BK40G10-../DSE06LA4**	68	11700	17000
0.18	4.2	330	3.1	328.2	**BK50Z-../DSE06LA4**	92	14100	26000
0.18	3.3	415	2.0	414.8	**BK50Z-../DSE06LA4**	92	14100	26000
0.18	3.0	395	2.9	465.1	**BK50G10-../DSE06LA4**	96	14100	111000
0.18	2.7	440	2.6	513.4	**BK50G10-../DSE06LA4**	96	14100	111000
0.18	2.4	500	2.3	568.6	**BK50G10-../DSE06LA4**	96	14100	111000
0.18	2.1	570	2.0	651.7	**BK50G10-../DSE06LA4**	96	14100	111000
0.18	1.9	640	1.8	722.2	**BK50G10-../DSE06LA4**	96	14100	111000
0.18	1.6	760	1.5	859.8	**BK50G10-../DSE06LA4**	96	14100	111000
0.18	1.4	880	1.3	1024	**BK50G10-../DSE06LA4**	96	14100	111000
0.18	1.1	1120	1.05	1230	**BK50G10-../DSE06LA4**	96	14100	111000
0.18	1.0	1240	0.93	1398	**BK50G10-../DSE06LA4**	96	14100	111000
0.18	1.4	920	2.7	1016	**BK60G20-../DSE06LA4**	123	16600	34000
0.18	1.1	1220	2.0	1322	**BK60G20-../DSE06LA4**	123	16600	34000
0.18	0.85	1610	1.55	1618	**BK60G20-../DSE06LA4**	123	16600	34000
0.18	0.75	1830	1.35	1810	**BK60G20-../DSE06LA4**	123	16600	34000
0.18	0.7	1980	1.25	2010	**BK60G20-../DSE06LA4**	123	16600	34000
0.18	0.6	2350	1.05	2371	**BK60G20-../DSE06LA4**	123	16600	34000
0.18	0.8	1720	3.3	1696	**BK70G20-../DSE06LA4**	201	24100	50000
0.18	0.7	1940	2.9	2040	**BK70G20-../DSE06LA4**	201	24100	50000
0.18	0.55	2500	2.3	2578	**BK70G20-../DSE06LA4**	201	24100	50000
0.18	0.45	3150	1.8	3041	**BK70G20-../DSE06LA4**	201	24100	50000
0.18	0.39	3700	1.55	3505	**BK70G20-../DSE06LA4**	201	24100	50000
0.18	0.35	4200	1.35	3894	**BK70G20-../DSE06LA4**	201	24100	50000
0.18	0.3	5000	1.15	4531	**BK70G20-../DSE06LA4**	201	24100	50000

0.25 kW

P_N	50 Hz			i	Typ	m		
	n_2	M_2	f_B					
[kW]	[1/min]	[Nm]	[—]	[:1]		[kg]	[N]	[N]
0.25	140	15.6	5.1	9.71	**BK06-../DSE05LA4**	9.5	880	-
0.25	116	18.9	4.2	11.67	**BK06-../DSE05LA4**	9.5	930	-
0.25	89	24	3.3	15.29	**BK06-../DSE05LA4**	9.5	1020	-
0.25	75	28.5	2.8	18.00	**BK06-../DSE05LA4**	9.5	1080	-
0.25	63	34	2.4	21.54	**BK06-../DSE05LA4**	9.5	1150	-
0.25	52	41	1.95	26.36	**BK06-../DSE05LA4**	9.5	1230	-
0.25	41	52	1.55	33.33	**BK06-../DSE05LA4**	9.5	1320	-
0.25	35.5	60	1.35	38.18	**BK06-../DSE05LA4**	9.5	1380	-
0.25	28.5	74	1.1	47.78	**BK06-../DSE05LA4**	9.5	1500	-
0.25	25	84	0.81	54.38	**BK06-../DSE05LA4**	9.5	1600	-
0.25	33.5	64	3.1	40.79	**BK10-../DSE06LA4**	23	6000	-
0.25	28	75	2.7	48.96	**BK10-../DSE06LA4**	23	6400	-
0.25	22	96	2.1	61.68	**BK10-../DSE06LA4**	23	7000	-
0.25	19	110	1.8	72.31	**BK10-../DSE06LA4**	23	7000	-
0.25	15.5	134	1.35	89.30	**BK10-../DSE06LA4**	23	7000	-
0.25	13.5	150	1.05	102.5	**BK10-../DSE06LA4**	23	7000	-
0.25	8.0	245	0.82	170.6	**BK10Z-../DSE06LA4**	24	7000	-
0.25	18	116	2.8	76.79	**BK20-../DSE06LA4**	33	7500	9000
0.25	15.5	134	2.5	88.12	**BK20-../DSE06LA4**	33	8000	9000
0.25	12.5	164	1.9	108.6	**BK20-../DSE06LA4**	33	8700	9000
0.25	11	184	1.8	124.2	**BK20Z-../DSE06LA4**	34	8700	9000
0.25	9.4	210	1.55	144.5	**BK20Z-../DSE06LA4**	34	8700	9000
0.25	7.8	250	1.3	173.4	**BK20Z-../DSE06LA4**	34	8700	9000
0.25	6.6	295	1.1	207.5	**BK20Z-../DSE06LA4**	34	8700	9000
0.25	5.2	375	0.88	259.9	**BK20Z-../DSE06LA4**	34	8700	9000
0.25	13.5	150	3.0	102.4	**BK30-../DSE06LA4**	39	11200	12000
0.25	11	184	2.4	123.9	**BK30Z-../DSE06LA4**	41	11200	12000
0.25	9.4	210	2.1	145.1	**BK30Z-../DSE06LA4**	41	11200	12000
0.25	7.4	265	1.7	184.8	**BK30Z-../DSE06LA4**	41	11200	12000

The torques marked (*) are maximum permissible torques for service factor f_B=1.0.

0.25 kW

P_N	50 Hz			i	Typ	m		
	n_2	M_2	f_B					
[kW]	[1/min]	[Nm]	[—]	[:1]		[kg]	[N]	[N]
0.25	6.3	310	1.45	216.5	**BK30Z-../DSE06LA4**	41	11200	12000
0.25	5.3	365	1.25	255.3	**BK30Z-../DSE06LA4**	41	11200	12000
0.25	4.4	440	0.88	308.3	**BK30Z-../DSE06LA4**	41	11200	12000
0.25	8.0	245	3.2	169.0	**BK40Z-../DSE06LA4**	64	11700	17000
0.25	6.4	305	2.6	211.5	**BK40Z-../DSE06LA4**	64	11700	17000
0.25	5.5	350	2.2	246.6	**BK40Z-../DSE06LA4**	64	11700	17000
0.25	4.7	410	1.65	289.8	**BK40Z-../DSE06LA4**	64	11700	17000
0.25	3.9	495	1.15	348.7	**BK40Z-../DSE06LA4**	64	11700	17000
0.25	3.2	590	0.97	430.0	**BK40Z-../DSE06LA4**	64	11700	17000
0.25	2.8	610	1.4	487.3	**BK40G10-../DSE06LA4**	68	11700	17000
0.25	2.5	680	1.25	540.0	**BK40G10-../DSE06LA4**	68	11700	17000
0.25	2.1	810	1.05	660.2	**BK40G10-../DSE06LA4**	68	11700	17000
0.25	1.8	950	0.89	756.7	**BK40G10-../DSE06LA4**	68	11700	17000
0.25	1.7	1020	0.83	838.4	**BK40G10-../DSE06LA4**	68	11700	17000
0.25	5.2	370	2.8	264.5	**BK50Z-../DSE06LA4**	92	14100	26000
0.25	4.2	460	2.2	328.2	**BK50Z-../DSE06LA4**	92	14100	26000
0.25	3.3	570	1.5	414.8	**BK50Z-../DSE06LA4**	92	14100	26000
0.25	3.0	570	2.0	465.1	**BK50G10-../DSE06LA4**	96	14100	111000
0.25	2.7	630	1.85	513.4	**BK50G10-../DSE06LA4**	96	14100	111000
0.25	2.4	720	1.6	568.6	**BK50G10-../DSE06LA4**	96	14100	111000
0.25	2.1	820	1.4	651.7	**BK50G10-../DSE06LA4**	96	14100	111000
0.25	1.9	910	1.25	722.2	**BK50G10-../DSE06LA4**	96	14100	111000
0.25	1.6	1090	1.05	859.8	**BK50G10-../DSE06LA4**	96	14100	111000
0.25	1.4	1250	0.92	1024	**BK50G10-../DSE06LA4**	96	14100	111000
0.25	2.2	820	3.0	621.5	**BK60G20-../DSE06LA4**	123	16600	34000
0.25	1.8	1010	2.5	752.1	**BK60G20-../DSE06LA4**	123	16600	34000
0.25	1.6	1150	2.2	887.8	**BK60G20-../DSE06LA4**	123	16600	34000
0.25	1.4	1400	1.8	1016	**BK60G20-../DSE06LA4**	123	16600	34000
0.25	1.1	1830	1.35	1322	**BK60G20-../DSE06LA4**	123	16600	34000
0.25	0.85	2350	1.05	1618	**BK60G20-../DSE06LA4**	123	16600	34000
0.25	1.1	1790	3.2	1280	**BK70G20-../DSE06LA4**	201	24100	50000
0.25	0.95	2050	2.8	1457	**BK70G20-../DSE06LA4**	201	24100	50000
0.25	0.8	2550	2.2	1696	**BK70G20-../DSE06LA4**	201	24100	50000
0.25	0.7	2850	2.0	2040	**BK70G20-../DSE06LA4**	201	24100	50000
0.25	0.55	3700	1.55	2578	**BK70G20-../DSE06LA4**	201	24100	50000
0.25	0.45	4650	1.25	3041	**BK70G20-../DSE06LA4**	201	24100	50000
0.25	0.39	5400	1.05	3505	**BK70G20-../DSE06LA4**	201	24100	50000

0.37 kW

P_N	50 Hz			i	Typ	m		
	n_2	M_2	f_B					
[kW]	[1/min]	[Nm]	[—]	[:1]		[kg]	[N]	[N]
0.37	140	23	3.5	9.71	**BK06-../DSE07LA4**	14	880	-
0.37	116	28	2.9	11.67	**BK06-../DSE07LA4**	14	930	-
0.37	89	36	2.2	15.29	**BK06-../DSE07LA4**	14	1020	-
0.37	75	42	1.9	18.00	**BK06-../DSE07LA4**	14	1080	-
0.37	63	50	1.6	21.54	**BK06-../DSE07LA4**	14	1150	-
0.37	52	61	1.3	26.36	**BK06-../DSE07LA4**	14	1230	-
0.37	41	77	1.05	33.33	**BK06-../DSE07LA4**	14	1320	-
0.37	35.5	89	0.9	38.18	**BK06-../DSE07LA4**	14	1380	-
0.37	47	67	3.0	28.76	**BK10-../DSE07LA4**	26	5200	-
0.37	39.5	80	2.5	34.25	**BK10-../DSE07LA4**	26	5600	-
0.37	33.5	94	2.1	40.79	**BK10-../DSE07LA4**	26	6000	-
0.37	28	112	1.8	48.96	**BK10-../DSE07LA4**	26	6400	-
0.37	22	142	1.4	61.68	**BK10-../DSE07LA4**	26	7000	-
0.37	19	163	1.25	72.31	**BK10-../DSE07LA4**	26	7000	-
0.37	15.5	198	0.9	89.30	**BK10-../DSE07LA4**	26	7000	-
0.37	32	99	3.3	42.70	**BK20-../DSE07LA4**	35	5800	9000
0.37	26.5	118	2.8	51.22	**BK20-../DSE07LA4**	35	6300	9000

The torques marked (*) are maximum permissible torques for service factor f_B=1.0.

0.37 kW

P_N	50 Hz			i	Typ	m		
	n_2	M_2	f_B					
[kW]	[1/min]	[Nm]	[—]	[:1]		[kg]	[N]	[N]
0.37	22.5	139	2.4	61.30	**BK20-../DSE07LA4**	35	6500	9000
0.37	18	172	1.9	76.79	**BK20-../DSE07LA4**	35	7500	9000
0.37	15.5	198	1.65	88.12	**BK20-../DSE07LA4**	35	8000	9000
0.37	12.5	240	1.3	108.6	**BK20-../DSE07LA4**	35	8700	9000
0.37	11	270	1.2	124.2	**BK20Z-../DSE07LA4**	37	8700	9000
0.37	9.4	315	1.05	144.5	**BK20Z-../DSE07LA4**	37	8700	9000
0.37	7.8	375	0.88	173.4	**BK20Z-../DSE07LA4**	37	8700	9000
0.37	23	135	3.3	59.27	**BK30-../DSE07LA4**	41	8900	12000
0.37	19	161	2.8	71.56	**BK30-../DSE07LA4**	41	9700	12000
0.37	15.5	196	2.3	88.38	**BK30-../DSE07LA4**	41	10600	12000
0.37	13.5	220	2.0	102.4	**BK30-../DSE07LA4**	41	11200	12000
0.37	11	270	1.65	123.9	**BK30Z-../DSE07LA4**	44	11200	12000
0.37	9.4	315	1.45	145.1	**BK30Z-../DSE07LA4**	44	11200	12000
0.37	7.4	395	1.15	184.8	**BK30Z-../DSE07LA4**	44	11200	12000
0.37	6.3	455	0.99	216.5	**BK30Z-../DSE07LA4**	44	11200	12000
0.37	5.3	540	0.83	255.3	**BK30Z-../DSE07LA4**	44	11200	12000
0.37	11.5	260	3.0	118.2	**BK40Z-../DSE07LA4**	66	11700	17000
0.37	9.5	310	2.5	143.0	**BK40Z-../DSE07LA4**	66	11700	17000
0.37	8.0	365	2.1	169.0	**BK40Z-../DSE07LA4**	66	11700	17000
0.37	6.4	450	1.75	211.5	**BK40Z-../DSE07LA4**	66	11700	17000
0.37	5.5	520	1.5	246.6	**BK40Z-../DSE07LA4**	66	11700	17000
0.37	4.7	600	1.15	289.8	**BK40Z-../DSE07LA4**	66	11700	17000
0.37	3.9	730	0.8	348.7	**BK40Z-../DSE07LA4**	66	11700	17000
0.37	2.8	930	0.91	487.3	**BK40G10-../DSE07LA4**	71	11700	17000
0.37	2.5	1040	0.82	540.0	**BK40G10-../DSE07LA4**	71	11700	17000
0.37	8.9	325	3.2	153.3	**BK50Z-../DSE07LA4**	95	14100	26000
0.37	6.6	435	2.4	206.8	**BK50Z-../DSE07LA4**	95	14100	26000
0.37	5.2	550	1.9	264.5	**BK50Z-../DSE07LA4**	95	14100	26000
0.37	4.2	680	1.5	328.2	**BK50Z-../DSE07LA4**	95	14100	26000
0.37	3.3	850	0.99	414.8	**BK50Z-../DSE07LA4**	95	14100	26000
0.37	3.0	870	1.3	465.1	**BK50G10-../DSE07LA4**	99	14100	111000
0.37	2.7	970	1.2	513.4	**BK50G10-../DSE07LA4**	99	14100	111000
0.37	2.4	1090	1.05	568.6	**BK50G10-../DSE07LA4**	99	14100	111000
0.37	2.1	1250	0.92	651.7	**BK50G10-../DSE07LA4**	99	14100	111000
0.37	1.9	1380	0.83	722.2	**BK50G10-../DSE07LA4**	99	14100	111000
0.37	2.2	1340	1.85	621.5	**BK60G20-../DSE07LA4**	125	16600	34000
0.37	1.8	1640	1.5	752.1	**BK60G20-../DSE07LA4**	125	16600	34000
0.37	1.6	1870	1.35	887.8	**BK60G20-../DSE07LA4**	125	16600	34000
0.37	1.4	2200	1.15	1016	**BK60G20-../DSE07LA4**	125	16600	34000
0.37	1.1	2850	0.88	1322	**BK60G20-../DSE07LA4**	125	16600	34000
0.37	1.6	1850	3.1	847.7	**BK70G20-../DSE07LA4**	204	24100	50000
0.37	1.4	2100	2.7	964.6	**BK70G20-../DSE07LA4**	204	24100	50000
0.37	1.2	2500	2.3	1139	**BK70G20-../DSE07LA4**	204	24100	50000
0.37	1.1	2800	2.0	1280	**BK70G20-../DSE07LA4**	204	24100	50000
0.37	0.95	3250	1.75	1457	**BK70G20-../DSE07LA4**	204	24100	50000
0.37	0.8	3950	1.45	1696	**BK70G20-../DSE07LA4**	204	24100	50000
0.37	0.7	4500	1.25	2040	**BK70G20-../DSE07LA4**	204	24100	50000

0.55 kW

P_N	50 Hz			i	Typ	m		
	n_2	M_2	f_B					
[kW]	[1/min]	[Nm]	[—]	[:1]		[kg]	[N]	[N]
0.55	194	24.5	3.0	7.25	**BK06-../DSE08MA4**	15	800	-
0.55	145	33	2.4	9.71	**BK06-../DSE08MA4**	15	880	-
0.55	120	40	2.0	11.67	**BK06-../DSE08MA4**	15	930	-
0.55	92	51	1.55	15.29	**BK06-../DSE08MA4**	15	1020	-
0.55	78	60	1.35	18.00	**BK06-../DSE08MA4**	15	1080	-
0.55	65	72	1.1	21.54	**BK06-../DSE08MA4**	15	1150	-
0.55	54	87	0.92	26.36	**BK06-../DSE08MA4**	15	1230	-

The torques marked (*) are maximum permissible torques for service factor f_B=1.0.

0.55 kW

P_N	50 Hz			i	Typ	m		
	n_2	M_2	f_B					
[kW]	[1/min]	[Nm]	[—]	[:1]		[kg]	[N]	[N]
0.55	118	40.5	2.8	11.93	**BK10-../DSE08MA4**	27	3100	-
0.55	83	56	2.4	16.92	**BK10-../DSE08MA4**	27	3700	-
0.55	76	62	3.2	18.52	**BK10-../DSE08MA4**	27	4300	-
0.55	62	76	2.6	22.65	**BK10-../DSE08MA4**	27	4650	-
0.55	49	96	2.1	28.76	**BK10-../DSE08MA4**	27	5200	-
0.55	41	115	1.75	34.25	**BK10-../DSE08MA4**	27	5600	-
0.55	34.5	137	1.45	40.79	**BK10-../DSE08MA4**	27	6000	-
0.55	29	161	1.25	48.96	**BK10-../DSE08MA4**	27	6400	-
0.55	23	200	1.0	61.68	**BK10-../DSE08MA4**	27	7000	-
0.55	19.5	235	0.85	72.31	**BK10-../DSE08MA4**	27	7000	-
0.55	38.5	122	2.7	36.69	**BK20-../DSE08MA4**	36	5400	9000
0.55	33	143	2.3	42.70	**BK20-../DSE08MA4**	36	5800	9000
0.55	27.5	169	1.95	51.22	**BK20-../DSE08MA4**	36	6300	9000
0.55	23	200	1.65	61.30	**BK20-../DSE08MA4**	36	6500	9000
0.55	18.5	245	1.35	76.79	**BK20-../DSE08MA4**	36	7500	9000
0.55	16	285	1.15	88.12	**BK20-../DSE08MA4**	36	8000	9000
0.55	13	345	0.91	108.6	**BK20-../DSE08MA4**	36	8700	9000
0.55	11.5	385	0.86	124.2	**BK20Z-../DSE08MA4**	38	8700	9000
0.55	33	141	3.2	42.89	**BK30-../DSE08MA4**	42	7800	12000
0.55	28	165	2.7	50.27	**BK30-../DSE08MA4**	42	8300	12000
0.55	24	192	2.3	59.27	**BK30-../DSE08MA4**	42	8900	12000
0.55	20	225	2.0	71.56	**BK30-../DSE08MA4**	42	9700	12000
0.55	16	280	1.6	88.38	**BK30-../DSE08MA4**	42	10600	12000
0.55	14	315	1.45	102.4	**BK30-../DSE08MA4**	42	11200	12000
0.55	11.5	385	1.15	123.9	**BK30Z-../DSE08MA4**	45	11200	12000
0.55	9.7	450	1.0	145.1	**BK30Z-../DSE08MA4**	45	11200	12000
0.55	17	265	2.9	84.36	**BK40-../DSE08MA4**	63	10700	17000
0.55	13.5	330	2.4	104.0	**BK40-../DSE08MA4**	63	11700	17000
0.55	12	370	2.1	118.2	**BK40Z-../DSE08MA4**	67	11700	17000
0.55	9.8	450	1.75	143.0	**BK40Z-../DSE08MA4**	67	11700	17000
0.55	8.3	520	1.5	169.0	**BK40Z-../DSE08MA4**	67	11700	17000
0.55	6.7	640	1.2	211.5	**BK40Z-../DSE08MA4**	67	11700	17000
0.55	5.7	740	1.05	246.6	**BK40Z-../DSE08MA4**	67	11700	17000
0.55	4.9	860	0.8	289.8	**BK40Z-../DSE08MA4**	67	11700	17000
0.55	12.5	355	3.0	115.4	**BK50Z-../DSE08MA4**	96	14100	26000
0.55	9.2	470	2.2	153.3	**BK50Z-../DSE08MA4**	96	14100	26000
0.55	6.8	630	1.65	206.8	**BK50Z-../DSE08MA4**	96	14100	26000
0.55	5.3	800	1.3	264.5	**BK50Z-../DSE08MA4**	96	14100	26000
0.55	4.3	980	1.05	328.2	**BK50Z-../DSE08MA4**	96	14100	26000
0.55	3.1	1290	0.89	465.1	**BK50G10-../DSE08MA4**	100	14100	111000
0.55	2.8	1420	0.81	513.4	**BK50G10-../DSE08MA4**	100	14100	111000
0.55	6.9	760	3.0	205.0	**BK60Z-../DSE08MA4**	119	16600	34000
0.55	5.9	890	2.6	239.7	**BK60Z-../DSE08MA4**	119	16600	34000
0.55	5.3	990	2.3	268.2	**BK60Z-../DSE08MA4**	119	16600	34000
0.55	4.5	1160	2.0	317.7	**BK60Z-../DSE08MA4**	119	16600	34000
0.55	4.0	1310	1.75	355.5	**BK60Z-../DSE08MA4**	119	16600	34000
0.55	3.5	1500	1.55	411.5	**BK60Z-../DSE08MA4**	119	16600	34000
0.55	3.1	1690	1.35	460.4	**BK60Z-../DSE08MA4**	119	16600	34000
0.55	2.9	1810	1.25	498.0	**BK60Z-../DSE08MA4**	119	16600	34000
0.55	2.6	2000	1.15	557.2	**BK60Z-../DSE08MA4**	119	16600	34000
0.55	2.3	2000	1.25	621.5	**BK60G20-../DSE08MA4**	126	16600	34000
0.55	1.9	2400	1.05	752.1	**BK60G20-../DSE08MA4**	126	16600	34000
0.55	1.6	2900	0.86	887.8	**BK60G20-../DSE08MA4**	126	16600	34000
0.55	3.3	1590	3.3	432.1	**BK70Z-../DSE08MA4**	207	24100	50000
0.55	2.8	1870	2.8	501.8	**BK70Z-../DSE08MA4**	207	24100	50000
0.55	2.5	2100	2.5	570.8	**BK70Z-../DSE08MA4**	207	24100	50000
0.55	2.2	2350	2.2	644.9	**BK70Z-../DSE08MA4**	207	24100	50000
0.55	2.0	2600	2.0	733.6	**BK70Z-../DSE08MA4**	207	24100	50000
0.55	1.7	2700	2.1	847.7	**BK70G20-../DSE08MA4**	205	24100	50000
0.55	1.5	3050	1.85	964.6	**BK70G20-../DSE08MA4**	205	24100	50000
0.55	1.3	3600	1.6	1139	**BK70G20-../DSE08MA4**	205	24100	50000
0.55	1.1	4350	1.3	1280	**BK70G20-../DSE08MA4**	205	24100	50000
0.55	1.0	4800	1.2	1457	**BK70G20-../DSE08MA4**	205	24100	50000

The torques marked (*) are maximum permissible torques for service factor f_B=1.0.

0.55 kW

P_N	50 Hz			i	Typ	m		
	n_2	M_2	f_B					
[kW]	[1/min]	[Nm]	[—]	[:1]		[kg]	[N]	[N]
0.55	1.1	3750	3.1	1307	**BK80G40-../DSE08MA4**	347	30000	75000
0.55	1.0	4050	2.8	1425	**BK80G40-../DSE08MA4**	347	30000	75000
0.55	0.9	4600	2.5	1583	**BK80G40-../DSE08MA4**	347	30000	75000
0.55	0.8	5200	2.2	1775	**BK80G40-../DSE08MA4**	347	30000	75000
0.55	0.65	6600	1.75	2205	**BK80G40-../DSE08MA4**	347	30000	75000
0.55	0.6	7300	1.6	2449	**BK80G40-../DSE08MA4**	347	30000	75000
0.55	0.5	9000	1.3	2811	**BK80G40-../DSE08MA4**	347	30000	75000
0.55	0.45	10200	1.15	3120	**BK80G40-../DSE08MA4**	347	30000	75000
0.55	0.55	7400	2.5	2764	**BK90G50-../DSE08MA4**	620	49400	120000
0.55	0.46	9300	2.0	3065	**BK90G50-../DSE08MA4**	620	49400	120000
0.55	0.39	11300	1.65	3672	**BK90G50-../DSE08MA4**	620	49400	120000
0.55	0.35	12900	1.45	4070	**BK90G50-../DSE08MA4**	620	49400	120000
0.55	0.29	16000	1.15	4952	**BK90G50-../DSE08MA4**	620	49400	120000
0.55	0.26	18000	1.05	5491	**BK90G50-../DSE08MA4**	620	49400	120000

0.75 kW

P_N	50 Hz			i	Typ	m		
	n_2	M_2	f_B					
[kW]	[1/min]	[Nm]	[—]	[:1]		[kg]	[N]	[N]
0.75	194	33.5	2.2	7.25	**BK06-../DSE08LA4**	16	800	-
0.75	145	45	1.8	9.71	**BK06-../DSE08LA4**	16	880	-
0.75	120	54	1.5	11.67	**BK06-../DSE08LA4**	16	930	-
0.75	92	70	1.15	15.29	**BK06-../DSE08LA4**	16	1020	-
0.75	78	82	0.98	18.00	**BK06-../DSE08LA4**	16	1080	-
0.75	65	99	0.81	21.54	**BK06-../DSE08LA4**	16	1150	-
0.75	183	36	3.2	7.68	**BK10-../DSE08LA4**	28	2400	-
0.75	149	44	2.6	9.40	**BK10-../DSE08LA4**	28	2700	-
0.75	118	55	2.1	11.93	**BK10-../DSE08LA4**	28	3100	-
0.75	97	66	3.0	14.50	**BK10-../DSE08LA4**	28	3900	-
0.75	83	77	1.75	16.92	**BK10-../DSE08LA4**	28	3700	-
0.75	76	84	2.4	18.52	**BK10-../DSE08LA4**	28	4300	-
0.75	62	103	1.95	22.65	**BK10-../DSE08LA4**	28	4650	-
0.75	49	131	1.55	28.76	**BK10-../DSE08LA4**	28	5200	-
0.75	41	157	1.25	34.25	**BK10-../DSE08LA4**	28	5600	-
0.75	34.5	186	1.1	40.79	**BK10-../DSE08LA4**	28	6000	-
0.75	29	215	0.93	48.96	**BK10-../DSE08LA4**	28	6400	-
0.75	81	80	2.9	17.42	**BK20-../DSE08LA4**	38	3250	9000
0.75	58	111	3.0	24.29	**BK20-../DSE08LA4**	38	4500	9000
0.75	49	131	2.5	28.66	**BK20-../DSE08LA4**	38	4850	9000
0.75	38.5	167	2.0	36.69	**BK20-../DSE08LA4**	38	5400	9000
0.75	33	195	1.7	42.70	**BK20-../DSE08LA4**	38	5800	9000
0.75	27.5	230	1.45	51.22	**BK20-../DSE08LA4**	38	6300	9000
0.75	23	275	1.2	61.30	**BK20-../DSE08LA4**	38	6500	9000
0.75	18.5	340	0.97	76.79	**BK20-../DSE08LA4**	38	7500	9000
0.75	16	385	0.86	88.12	**BK20-../DSE08LA4**	38	8000	9000
0.75	42	153	2.9	33.70	**BK30-../DSE08LA4**	44	7000	12000
0.75	33	193	2.3	42.89	**BK30-../DSE08LA4**	44	7800	12000
0.75	28	225	2.0	50.27	**BK30-../DSE08LA4**	44	8300	12000
0.75	24	260	1.75	59.27	**BK30-../DSE08LA4**	44	8900	12000
0.75	20	310	1.45	71.56	**BK30-../DSE08LA4**	44	9700	12000
0.75	16	380	1.2	88.38	**BK30-../DSE08LA4**	44	10600	12000
0.75	14	430	1.05	102.4	**BK30-../DSE08LA4**	44	11200	12000
0.75	11.5	520	0.87	123.9	**BK30Z-../DSE08LA4**	46	11200	12000
0.75	23.5	265	2.9	59.66	**BK40-../DSE08LA4**	64	9100	17000
0.75	20	310	2.5	70.11	**BK40-../DSE08LA4**	64	9800	17000
0.75	17	365	2.1	84.36	**BK40-../DSE08LA4**	64	10700	17000
0.75	13.5	450	1.75	104.0	**BK40-../DSE08LA4**	64	11700	17000
0.75	12	500	1.55	118.2	**BK40Z-../DSE08LA4**	69	11700	17000
0.75	9.8	610	1.3	143.0	**BK40Z-../DSE08LA4**	69	11700	17000
0.75	8.3	710	1.1	169.0	**BK40Z-../DSE08LA4**	69	11700	17000

The torques marked (*) are maximum permissible torques for service factor f_B=1.0.

0.75 kW

P_N	50 Hz			i	Typ	m		
	n_2	M_2	f_B					
[kW]	[1/min]	[Nm]	[—]	[:1]		[kg]	[N]	[N]
0.75	6.7	870	0.9	211.5	**BK40Z-../DSE08LA4**	69	11700	17000
0.75	19	325	3.2	75.40	**BK50-../DSE08LA4**	93	12600	26000
0.75	15	410	2.6	95.29	**BK50-../DSE08LA4**	93	14100	26000
0.75	12.5	485	2.2	115.4	**BK50Z-../DSE08LA4**	98	14100	26000
0.75	9.2	640	1.65	153.3	**BK50Z-../DSE08LA4**	98	14100	26000
0.75	6.8	860	1.2	206.8	**BK50Z-../DSE08LA4**	98	14100	26000
0.75	5.3	1090	0.96	264.5	**BK50Z-../DSE08LA4**	98	14100	26000
0.75	9.2	770	3.0	153.7	**BK60Z-../DSE08LA4**	120	16600	34000
0.75	7.7	930	2.5	183.2	**BK60Z-../DSE08LA4**	120	16600	34000
0.75	6.9	1030	2.2	205.0	**BK60Z-../DSE08LA4**	120	16600	34000
0.75	5.9	1210	1.9	239.7	**BK60Z-../DSE08LA4**	120	16600	34000
0.75	5.3	1350	1.7	268.2	**BK60Z-../DSE08LA4**	120	16600	34000
0.75	4.5	1590	1.45	317.7	**BK60Z-../DSE08LA4**	120	16600	34000
0.75	4.0	1790	1.3	355.5	**BK60Z-../DSE08LA4**	120	16600	34000
0.75	3.5	2000	1.15	411.5	**BK60Z-../DSE08LA4**	120	16600	34000
0.75	3.1	2300	1.0	460.4	**BK60Z-../DSE08LA4**	120	16600	34000
0.75	2.9	2450	0.94	498.0	**BK60Z-../DSE08LA4**	120	16600	34000
0.75	2.6	2750	0.84	557.2	**BK60Z-../DSE08LA4**	120	16600	34000
0.75	2.3	2850	0.88	621.5	**BK60G20-../DSE08LA4**	128	16600	34000
0.75	4.2	1700	3.1	333.6	**BK70Z-../DSE08LA4**	208	24100	50000
0.75	3.7	1930	2.7	379.9	**BK70Z-../DSE08LA4**	208	24100	50000
0.75	3.3	2150	2.4	432.1	**BK70Z-../DSE08LA4**	208	24100	50000
0.75	2.8	2550	2.0	501.8	**BK70Z-../DSE08LA4**	208	24100	50000
0.75	2.5	2850	1.8	570.8	**BK70Z-../DSE08LA4**	208	24100	50000
0.75	2.2	3250	1.6	644.9	**BK70Z-../DSE08LA4**	208	24100	50000
0.75	2.0	3550	1.45	733.6	**BK70Z-../DSE08LA4**	208	24100	50000
0.75	1.7	3850	1.5	847.7	**BK70G20-../DSE08LA4**	206	24100	50000
0.75	1.5	4350	1.3	964.6	**BK70G20-../DSE08LA4**	206	24100	50000
0.75	1.3	5000	1.15	1139	**BK70G20-../DSE08LA4**	206	24100	50000
0.75	1.1	6100	0.93	1280	**BK70G20-../DSE08LA4**	206	24100	50000
0.75	1.0	6700	0.85	1457	**BK70G20-../DSE08LA4**	206	24100	50000
0.75	1.5	3850	3.0	963.0	**BK80G40-../DSE08LA4**	348	30000	75000
0.75	1.3	4450	2.6	1079	**BK80G40-../DSE08LA4**	348	30000	75000
0.75	1.1	5400	2.1	1307	**BK80G40-../DSE08LA4**	348	30000	75000
0.75	1.0	5900	1.95	1425	**BK80G40-../DSE08LA4**	348	30000	75000
0.75	0.9	6700	1.7	1583	**BK80G40-../DSE08LA4**	348	30000	75000
0.75	0.8	7600	1.5	1775	**BK80G40-../DSE08LA4**	348	30000	75000
0.75	0.65	9600	1.2	2205	**BK80G40-../DSE08LA4**	348	30000	75000
0.75	0.6	10400	1.1	2449	**BK80G40-../DSE08LA4**	348	30000	75000
0.75	0.9	6400	2.9	1579	**BK90G50-../DSE08LA4**	621	49400	120000
0.75	0.8	7200	2.6	1803	**BK90G50-../DSE08LA4**	621	49400	120000
0.75	0.7	8300	2.2	2016	**BK90G50-../DSE08LA4**	621	49400	120000
0.75	0.55	10900	1.7	2764	**BK90G50-../DSE08LA4**	621	49400	120000
0.75	0.46	13400	1.4	3065	**BK90G50-../DSE08LA4**	621	49400	120000
0.75	0.39	16200	1.15	3672	**BK90G50-../DSE08LA4**	621	49400	120000
0.75	0.35	18300	1.0	4070	**BK90G50-../DSE08LA4**	621	49400	120000

1.1 kW

P_N	50 Hz			i	Typ	m		
	n_2	M_2	f_B					
[kW]	[1/min]	[Nm]	[—]	[:1]		[kg]	[N]	[N]
1.1	194	49.5	1.45	7.25	**BK06-../DSE08XA4**	18	800	-
1.1	145	66	1.2	9.71	**BK06-../DSE08XA4**	18	880	-
1.1	120	80	1.0	11.67	**BK06-../DSE08XA4**	18	930	-
1.1	320	30	3.2	4.44	**BK10-../DSE08XA4**	30	1900	-
1.1	235	41	2.6	6.02	**BK10-../DSE08XA4**	30	2100	-
1.1	183	52	2.2	7.68	**BK10-../DSE08XA4**	30	2400	-
1.1	149	64	1.8	9.40	**BK10-../DSE08XA4**	30	2700	-
1.1	131	72	2.5	10.70	**BK10-../DSE08XA4**	30	3500	-

The torques marked (*) are maximum permissible torques for service factor f_B=1.0.

1.1 kW

P_N	50 Hz			i	Typ	m		
	n_2	M_2	f_B					
[kW]	[1/min]	[Nm]	[—]	[:1]		[kg]	[N]	[N]
1.1	118	81	1.4	11.93	**BK10-../DSE08XA4**	30	3100	-
1.1	97	97	2.1	14.50	**BK10-../DSE08XA4**	30	3900	-
1.1	83	113	1.2	16.92	**BK10-../DSE08XA4**	30	3700	-
1.1	76	124	1.6	18.52	**BK10-../DSE08XA4**	30	4300	-
1.1	62	152	1.3	22.65	**BK10-../DSE08XA4**	30	4650	-
1.1	49	192	1.05	28.76	**BK10-../DSE08XA4**	30	5200	-
1.1	41	230	0.87	34.25	**BK10-../DSE08XA4**	30	5600	-
1.1	120	80	2.9	11.69	**BK20-../DSE08XA4**	39	2400	8800
1.1	95	99	3.3	14.75	**BK20-../DSE08XA4**	39	3650	9000
1.1	81	118	1.95	17.42	**BK20-../DSE08XA4**	39	3250	9000
1.1	73	129	2.6	19.39	**BK20-../DSE08XA4**	39	4050	9000
1.1	58	163	2.0	24.29	**BK20-../DSE08XA4**	39	4500	9000
1.1	49	192	1.7	28.66	**BK20-../DSE08XA4**	39	4850	9000
1.1	38.5	245	1.35	36.69	**BK20-../DSE08XA4**	39	5400	9000
1.1	33	285	1.15	42.70	**BK20-../DSE08XA4**	39	5800	9000
1.1	27.5	335	0.99	51.22	**BK20-../DSE08XA4**	39	6300	9000
1.1	23	405	0.81	61.30	**BK20-../DSE08XA4**	39	6500	9000
1.1	68	140	2.3	20.85	**BK30-../DSE08XA4**	45	5000	12000
1.1	61	154	2.9	23.20	**BK30-../DSE08XA4**	45	5900	12000
1.1	49	192	2.3	28.76	**BK30-../DSE08XA4**	45	6500	12000
1.1	42	225	2.0	33.70	**BK30-../DSE08XA4**	45	7000	12000
1.1	33	280	1.6	42.89	**BK30-../DSE08XA4**	45	7800	12000
1.1	28	330	1.35	50.27	**BK30-../DSE08XA4**	45	8300	12000
1.1	24	385	1.15	59.27	**BK30-../DSE08XA4**	45	8900	12000
1.1	20	455	0.99	71.56	**BK30-../DSE08XA4**	45	9700	12000
1.1	16	560	0.8	88.38	**BK30-../DSE08XA4**	45	10600	12000
1.1	34.5	270	2.9	40.88	**BK40-../DSE08XA4**	65	7600	17000
1.1	27.5	335	2.3	51.18	**BK40-../DSE08XA4**	65	8400	17000
1.1	23.5	390	2.0	59.66	**BK40-../DSE08XA4**	65	9100	17000
1.1	20	455	1.7	70.11	**BK40-../DSE08XA4**	65	9800	17000
1.1	17	530	1.45	84.36	**BK40-../DSE08XA4**	65	10700	17000
1.1	13.5	660	1.2	104.0	**BK40-../DSE08XA4**	65	11700	17000
1.1	12	740	1.05	118.2	**BK40Z-../DSE08XA4**	70	11700	17000
1.1	9.8	900	0.87	143.0	**BK40Z-../DSE08XA4**	70	11700	17000
1.1	29.5	315	3.3	47.50	**BK50-../DSE08XA4**	94	10100	25700
1.1	23.5	390	2.7	60.76	**BK50-../DSE08XA4**	94	11400	26000
1.1	19	480	2.2	75.40	**BK50-../DSE08XA4**	94	12600	26000
1.1	15	600	1.75	95.29	**BK50-../DSE08XA4**	94	14100	26000
1.1	12.5	710	1.5	115.4	**BK50Z-../DSE08XA4**	98	14100	26000
1.1	9.2	940	1.1	153.3	**BK50Z-../DSE08XA4**	98	14100	26000
1.1	6.8	1260	0.83	206.8	**BK50Z-../DSE08XA4**	98	14100	26000
1.1	9.2	1140	2.0	153.7	**BK60Z-../DSE08XA4**	121	16600	34000
1.1	7.7	1360	1.7	183.2	**BK60Z-../DSE08XA4**	121	16600	34000
1.1	6.9	1520	1.5	205.0	**BK60Z-../DSE08XA4**	121	16600	34000
1.1	5.9	1780	1.3	239.7	**BK60Z-../DSE08XA4**	121	16600	34000
1.1	5.3	1980	1.15	268.2	**BK60Z-../DSE08XA4**	121	16600	34000
1.1	4.5	2300	1.0	317.7	**BK60Z-../DSE08XA4**	121	16600	34000
1.1	4.0	2600	0.88	355.5	**BK60Z-../DSE08XA4**	121	16600	34000
1.1	6.2	1690	3.1	226.2	**BK70Z-../DSE08XA4**	210	24100	50000
1.1	5.5	1910	2.7	257.3	**BK70Z-../DSE08XA4**	210	24100	50000
1.1	4.8	2150	2.4	293.3	**BK70Z-../DSE08XA4**	210	24100	50000
1.1	4.2	2500	2.1	333.6	**BK70Z-../DSE08XA4**	210	24100	50000
1.1	3.7	2800	1.85	379.9	**BK70Z-../DSE08XA4**	210	24100	50000
1.1	3.3	3150	1.65	432.1	**BK70Z-../DSE08XA4**	210	24100	50000
1.1	2.8	3750	1.4	501.8	**BK70Z-../DSE08XA4**	210	24100	50000
1.1	2.5	4200	1.25	570.8	**BK70Z-../DSE08XA4**	210	24100	50000
1.1	2.2	4750	1.1	644.9	**BK70Z-../DSE08XA4**	210	24100	50000
1.1	2.0	5200	1.0	733.6	**BK70Z-../DSE08XA4**	210	24100	50000
1.1	1.7	5800	0.98	847.7	**BK70G20-../DSE08XA4**	207	24100	50000
1.1	1.5	6500	0.88	964.6	**BK70G20-../DSE08XA4**	207	24100	50000
1.1	2.4	3600	3.2	607.8	**BK80G40-../DSE08XA4**	349	30000	75000
1.1	2.1	4150	2.8	680.9	**BK80G40-../DSE08XA4**	349	30000	75000
1.1	1.9	4700	2.4	756.3	**BK80G40-../DSE08XA4**	349	30000	75000

The torques marked (*) are maximum permissible torques for service factor f_B=1.0.

1.1 kW

P_N	50 Hz			i	Typ	m		
	n_2	M_2	f_B					
[kW]	[1/min]	[Nm]	[—]	[:1]		[kg]	[N]	[N]
1.1	1.7	5200	2.2	847.2	**BK80G40-../DSE08XA4**	349	30000	75000
1.1	1.5	6100	1.9	963.0	**BK80G40-../DSE08XA4**	349	30000	75000
1.1	1.3	7000	1.65	1079	**BK80G40-../DSE08XA4**	349	30000	75000
1.1	1.1	8500	1.35	1307	**BK80G40-../DSE08XA4**	349	30000	75000
1.1	1.0	9300	1.25	1425	**BK80G40-../DSE08XA4**	349	30000	75000
1.1	0.9	10400	1.1	1583	**BK80G40-../DSE08XA4**	349	30000	75000
1.1	1.4	6100	3.0	1008	**BK90G50-../DSE08XA4**	622	49400	120000
1.1	1.3	6500	2.8	1127	**BK90G50-../DSE08XA4**	622	49400	120000
1.1	1.1	8300	2.2	1363	**BK90G50-../DSE08XA4**	622	49400	120000
1.1	0.9	10100	1.85	1579	**BK90G50-../DSE08XA4**	622	49400	120000
1.1	0.8	11400	1.6	1803	**BK90G50-../DSE08XA4**	622	49400	120000
1.1	0.7	13000	1.4	2016	**BK90G50-../DSE08XA4**	622	49400	120000
1.1	0.55	16900	1.1	2764	**BK90G50-../DSE08XA4**	622	49400	120000

1.5 kW

P_N	50 Hz			i	Typ	m		
	n_2	M_2	f_B					
[kW]	[1/min]	[Nm]	[—]	[:1]		[kg]	[N]	[N]
1.5	320	41	2.3	4.44	**BK10-../DSE09LA4**	36	1900	-
1.5	240	54	1.95	6.02	**BK10-../DSE09LA4**	36	2100	-
1.5	185	71	1.6	7.68	**BK10-../DSE09LA4**	36	2400	-
1.5	152	86	1.35	9.40	**BK10-../DSE09LA4**	36	2700	-
1.5	133	96	1.9	10.70	**BK10-../DSE09LA4**	36	3500	-
1.5	120	109	1.05	11.93	**BK10-../DSE09LA4**	36	3100	-
1.5	98	131	1.55	14.50	**BK10-../DSE09LA4**	36	3900	-
1.5	84	153	0.89	16.92	**BK10-../DSE09LA4**	36	3700	-
1.5	77	167	1.2	18.52	**BK10-../DSE09LA4**	36	4300	-
1.5	63	200	1.0	22.65	**BK10-../DSE09LA4**	36	4650	-
1.5	180	73	3.2	7.91	**BK20-../DSE09LA4**	46	1330	7600
1.5	144	91	2.5	9.91	**BK20-../DSE09LA4**	46	1910	8300
1.5	128	100	3.0	11.14	**BK20-../DSE09LA4**	46	3300	8100
1.5	122	108	2.1	11.69	**BK20-../DSE09LA4**	46	2400	8800
1.5	97	132	2.5	14.75	**BK20-../DSE09LA4**	46	3650	9000
1.5	82	158	1.45	17.42	**BK20-../DSE09LA4**	46	3250	9000
1.5	74	174	1.9	19.39	**BK20-../DSE09LA4**	46	4050	9000
1.5	59	215	1.55	24.29	**BK20-../DSE09LA4**	46	4500	9000
1.5	50	255	1.3	28.66	**BK20-../DSE09LA4**	46	4850	9000
1.5	39	330	1.0	36.69	**BK20-../DSE09LA4**	46	5400	9000
1.5	33.5	380	0.87	42.70	**BK20-../DSE09LA4**	46	5800	9000
1.5	120	109	2.9	11.93	**BK30-../DSE09LA4**	52	3650	12000
1.5	102	127	2.5	13.98	**BK30-../DSE09LA4**	52	4050	12000
1.5	80	161	2.8	17.95	**BK30-../DSE09LA4**	52	5300	12000
1.5	69	188	1.7	20.85	**BK30-../DSE09LA4**	52	5000	12000
1.5	62	205	2.2	23.20	**BK30-../DSE09LA4**	52	5900	12000
1.5	49.5	260	1.75	28.76	**BK30-../DSE09LA4**	52	6500	12000
1.5	42.5	300	1.5	33.70	**BK30-../DSE09LA4**	52	7000	12000
1.5	33.5	380	1.2	42.89	**BK30-../DSE09LA4**	52	7800	12000
1.5	28.5	440	1.0	50.27	**BK30-../DSE09LA4**	52	8300	12000
1.5	24	520	0.87	59.27	**BK30-../DSE09LA4**	52	8900	12000
1.5	50	255	3.1	28.59	**BK40-../DSE09LA4**	72	6300	17000
1.5	41.5	310	2.5	34.61	**BK40-../DSE09LA4**	72	6900	17000
1.5	35	365	2.1	40.88	**BK40-../DSE09LA4**	72	7600	17000
1.5	28	450	1.75	51.18	**BK40-../DSE09LA4**	72	8400	17000
1.5	24	520	1.5	59.66	**BK40-../DSE09LA4**	72	9100	17000
1.5	20.5	600	1.3	70.11	**BK40-../DSE09LA4**	72	9800	17000
1.5	17	730	1.05	84.36	**BK40-../DSE09LA4**	72	10700	17000
1.5	14	860	0.91	104.0	**BK40-../DSE09LA4**	72	11700	17000
1.5	12.5	970	0.8	118.2	**BK40Z-../DSE09LA4**	76	11700	17000
1.5	40.5	315	3.3	35.21	**BK50-../DSE09LA4**	100	8700	23100
1.5	30	420	2.5	47.50	**BK50-../DSE09LA4**	100	10100	25700

The torques marked (*) are maximum permissible torques for service factor f_B=1.0.

1.5 kW

P_N	50 Hz			i	Typ	m		
	n_2	M_2	f_B					
[kW]	[1/min]	[Nm]	[—]	[:1]		[kg]	[N]	[N]
1.5	23.5	530	2.0	60.76	**BK50-../DSE09LA4**	100	11400	26000
1.5	19	650	1.6	75.40	**BK50-../DSE09LA4**	100	12600	26000
1.5	15	820	1.3	95.29	**BK50-../DSE09LA4**	100	14100	26000
1.5	12.5	970	1.1	115.4	**BK50Z-../DSE09LA4**	105	14100	26000
1.5	9.3	1270	0.83	153.3	**BK50Z-../DSE09LA4**	105	14100	26000
1.5	18.5	770	3.0	78.13	**BK60-../DSE09LA4**	109	11900	34000
1.5	16.5	860	2.7	87.41	**BK60-../DSE09LA4**	109	12900	34000
1.5	14.5	980	2.3	101.2	**BK60-../DSE09LA4**	109	13900	34000
1.5	13	1100	2.1	113.2	**BK60-../DSE09LA4**	109	15000	34000
1.5	12	1190	1.95	122.5	**BK60-../DSE09LA4**	109	15500	34000
1.5	10.5	1360	1.7	137.0	**BK60-../DSE09LA4**	109	16600	34000
1.5	9.3	1540	1.5	153.7	**BK60Z-../DSE09LA4**	128	16600	34000
1.5	7.8	1830	1.25	183.2	**BK60Z-../DSE09LA4**	128	16600	34000
1.5	7.0	2000	1.15	205.0	**BK60Z-../DSE09LA4**	128	16600	34000
1.5	6.0	2350	0.98	239.7	**BK60Z-../DSE09LA4**	128	16600	34000
1.5	5.3	2700	0.85	268.2	**BK60Z-../DSE09LA4**	128	16600	34000
1.5	8.1	1760	3.0	175.7	**BK70-../DSE09LA4**	195	24100	50000
1.5	7.5	1910	2.7	190.4	**BK70Z-../DSE09LA4**	216	24100	50000
1.5	6.3	2250	2.3	226.2	**BK70Z-../DSE09LA4**	216	24100	50000
1.5	5.6	2550	2.0	257.3	**BK70Z-../DSE09LA4**	216	24100	50000
1.5	4.9	2900	1.8	293.3	**BK70Z-../DSE09LA4**	216	24100	50000
1.5	4.3	3300	1.6	333.6	**BK70Z-../DSE09LA4**	216	24100	50000
1.5	3.8	3750	1.4	379.9	**BK70Z-../DSE09LA4**	216	24100	50000
1.5	3.3	4300	1.2	432.1	**BK70Z-../DSE09LA4**	216	24100	50000
1.5	2.9	4900	1.05	501.8	**BK70Z-../DSE09LA4**	216	24100	50000
1.5	2.5	5700	0.91	570.8	**BK70Z-../DSE09LA4**	216	24100	50000
1.5	2.3	6200	0.84	644.9	**BK70Z-../DSE09LA4**	216	24100	50000
1.5	3.7	3850	3.0	389.0	**BK80Z-../DSE09LA4**	345	30000	75000
1.5	3.3	4300	2.7	435.7	**BK80Z-../DSE09LA4**	345	30000	75000
1.5	2.9	4900	2.3	499.5	**BK80Z-../DSE09LA4**	345	30000	75000
1.5	2.6	5500	2.1	559.5	**BK80Z-../DSE09LA4**	345	30000	75000
1.5	2.4	5200	2.2	607.8	**BK80G40-../DSE09LA4**	356	30000	75000
1.5	2.1	5900	1.95	680.9	**BK80G40-../DSE09LA4**	356	30000	75000
1.5	1.9	6700	1.7	756.3	**BK80G40-../DSE09LA4**	356	30000	75000
1.5	1.7	7500	1.55	847.2	**BK80G40-../DSE09LA4**	356	30000	75000
1.5	1.5	8600	1.35	963.0	**BK80G40-../DSE09LA4**	356	30000	75000
1.5	1.4	9200	1.25	1079	**BK80G40-../DSE09LA4**	356	30000	75000
1.5	1.1	12000	0.96	1307	**BK80G40-../DSE09LA4**	356	30000	75000
1.5	1.0	13100	0.88	1425	**BK80G40-../DSE09LA4**	356	30000	75000
1.5	2.3	6200	3.0	637.7	**BK90Z-../DSE09LA4**	618	49400	120000
1.5	2.0	7100	2.6	713.5	**BK90Z-../DSE09LA4**	618	49400	120000
1.5	1.8	6600	2.8	821.0	**BK90G50-../DSE09LA4**	629	49400	120000
1.5	1.7	7200	2.6	882.3	**BK90G50-../DSE09LA4**	629	49400	120000
1.5	1.5	8200	2.3	1008	**BK90G50-../DSE09LA4**	629	49400	120000
1.5	1.3	9500	1.95	1127	**BK90G50-../DSE09LA4**	629	49400	120000
1.5	1.1	11800	1.55	1363	**BK90G50-../DSE09LA4**	629	49400	120000
1.5	0.9	14400	1.3	1579	**BK90G50-../DSE09LA4**	629	49400	120000
1.5	0.8	16100	1.15	1803	**BK90G50-../DSE09LA4**	629	49400	120000
1.5	0.75	17100	1.1	2016	**BK90G50-../DSE09LA4**	629	49400	120000

2.2 kW

P_N	50 Hz			i	Typ	m		
	n_2	M_2	f_B					
[kW]	[1/min]	[Nm]	[—]	[:1]		[kg]	[N]	[N]
2.2	320	60	1.6	4.44	**BK10-../DSE09XA4**	40	1900	-
2.2	240	80	1.3	6.02	**BK10-../DSE09XA4**	40	2100	-
2.2	185	104	1.1	7.68	**BK10-../DSE09XA4**	40	2400	-
2.2	152	127	0.91	9.40	**BK10-../DSE09XA4**	40	2700	-
2.2	133	142	1.25	10.70	**BK10-../DSE09XA4**	40	3500	-
2.2	98	192	1.05	14.50	**BK10-../DSE09XA4**	40	3900	-
2.2	77	245	0.82	18.52	**BK10-../DSE09XA4**	40	4300	-

The torques marked (*) are maximum permissible torques for service factor f_B=1.0.

2.2 kW

P_N	50 Hz			i	Typ	m		
	n_2	M_2	f_B					
[kW]	[1/min]	[Nm]	[—]	[:1]		[kg]	[N]	[N]
2.2	315	61	3.2	4.54	**BK20-../DSE09XA4**	50	520	6100
2.2	240	80	2.7	6.02	**BK20-../DSE09XA4**	50	580	6800
2.2	180	107	2.2	7.91	**BK20-../DSE09XA4**	50	1330	7600
2.2	144	134	1.7	9.91	**BK20-../DSE09XA4**	50	1910	8300
2.2	128	147	2.0	11.14	**BK20-../DSE09XA4**	50	3300	8100
2.2	122	158	1.45	11.69	**BK20-../DSE09XA4**	50	2400	8800
2.2	97	194	1.7	14.75	**BK20-../DSE09XA4**	50	3650	9000
2.2	82	230	1.0	17.42	**BK20-../DSE09XA4**	50	3250	9000
2.2	74	255	1.3	19.39	**BK20-../DSE09XA4**	50	4050	9000
2.2	59	320	1.05	24.29	**BK20-../DSE09XA4**	50	4500	9000
2.2	50	375	0.88	28.66	**BK20-../DSE09XA4**	50	4850	9000
2.2	305	63	3.1	4.73	**BK30-../DSE09XA4**	56	1550	8800
2.2	240	80	2.7	6.02	**BK30-../DSE09XA4**	56	1690	9600
2.2	191	101	2.7	7.45	**BK30-../DSE09XA4**	56	2200	10400
2.2	148	130	2.5	9.63	**BK30-../DSE09XA4**	56	3150	11500
2.2	125	151	2.7	11.39	**BK30-../DSE09XA4**	56	4150	11000
2.2	120	161	2.0	11.93	**BK30-../DSE09XA4**	56	3650	12000
2.2	102	187	1.7	13.98	**BK30-../DSE09XA4**	56	4050	12000
2.2	98	192	2.3	14.50	**BK30-../DSE09XA4**	56	4900	12000
2.2	80	235	1.9	17.95	**BK30-../DSE09XA4**	56	5300	12000
2.2	69	275	1.15	20.85	**BK30-../DSE09XA4**	56	5000	12000
2.2	62	300	1.5	23.20	**BK30-../DSE09XA4**	56	5900	12000
2.2	49.5	380	1.2	28.76	**BK30-../DSE09XA4**	56	6500	12000
2.2	42.5	440	1.0	33.70	**BK30-../DSE09XA4**	56	7000	12000
2.2	33.5	550	0.82	42.89	**BK30-../DSE09XA4**	56	7800	12000
2.2	120	161	3.1	11.86	**BK40-../DSE09XA4**	76	1770	12200
2.2	79	235	3.3	18.05	**BK40-../DSE09XA4**	76	4900	15300
2.2	64	295	2.6	22.44	**BK40-../DSE09XA4**	76	5500	16500
2.2	50	375	2.1	28.59	**BK40-../DSE09XA4**	76	6300	17000
2.2	41.5	455	1.7	34.61	**BK40-../DSE09XA4**	76	6900	17000
2.2	35	540	1.45	40.88	**BK40-../DSE09XA4**	76	7600	17000
2.2	28	660	1.2	51.18	**BK40-../DSE09XA4**	76	8400	17000
2.2	24	770	1.0	59.66	**BK40-../DSE09XA4**	76	9100	17000
2.2	20.5	890	0.88	70.11	**BK40-../DSE09XA4**	76	9800	17000
2.2	80	235	3.1	17.92	**BK50-../DSE09XA4**	104	4600	16800
2.2	54	350	3.0	26.51	**BK50-../DSE09XA4**	104	7800	21200
2.2	40.5	465	2.3	35.21	**BK50-../DSE09XA4**	104	8700	23100
2.2	30	620	1.7	47.50	**BK50-../DSE09XA4**	104	10100	25700
2.2	23.5	780	1.35	60.76	**BK50-../DSE09XA4**	104	11400	26000
2.2	19	960	1.1	75.40	**BK50-../DSE09XA4**	104	12600	26000
2.2	15	1200	0.88	95.29	**BK50-../DSE09XA4**	104	14100	26000
2.2	28.5	730	3.2	50.40	**BK60-../DSE09XA4**	113	9100	29800
2.2	24.5	850	2.7	58.95	**BK60-../DSE09XA4**	113	9900	31500
2.2	22	950	2.4	65.95	**BK60-../DSE09XA4**	113	10900	33000
2.2	18.5	1130	2.0	78.13	**BK60-../DSE09XA4**	113	11900	34000
2.2	16.5	1270	1.8	87.41	**BK60-../DSE09XA4**	113	12900	34000
2.2	14.5	1440	1.6	101.2	**BK60-../DSE09XA4**	113	13900	34000
2.2	13	1610	1.45	113.2	**BK60-../DSE09XA4**	113	15000	34000
2.2	12	1750	1.3	122.5	**BK60-../DSE09XA4**	113	15500	34000
2.2	10.5	2000	1.15	137.0	**BK60-../DSE09XA4**	113	16600	34000
2.2	9.3	2250	1.0	153.7	**BK60Z-../DSE09XA4**	132	16600	34000
2.2	7.8	2650	0.87	183.2	**BK60Z-../DSE09XA4**	132	16600	34000
2.2	12	1750	3.0	120.2	**BK70-../DSE09XA4**	199	18600	50000
2.2	10.5	2000	2.6	136.7	**BK70-../DSE09XA4**	199	20700	50000
2.2	9.2	2250	2.3	154.4	**BK70-../DSE09XA4**	199	21900	50000
2.2	8.1	2550	2.0	175.7	**BK70-../DSE09XA4**	199	24100	50000
2.2	7.5	2800	1.85	190.4	**BK70Z-../DSE09XA4**	220	24100	50000
2.2	6.3	3300	1.6	226.2	**BK70Z-../DSE09XA4**	220	24100	50000
2.2	5.6	3750	1.4	257.3	**BK70Z-../DSE09XA4**	220	24100	50000
2.2	4.9	4250	1.2	293.3	**BK70Z-../DSE09XA4**	220	24100	50000
2.2	4.3	4850	1.05	333.6	**BK70Z-../DSE09XA4**	220	24100	50000
2.2	3.8	5500	0.95	379.9	**BK70Z-../DSE09XA4**	220	24100	50000
2.2	3.3	6300	0.83	432.1	**BK70Z-../DSE09XA4**	220	24100	50000
2.2	5.7	3650	3.2	253.3	**BK80Z-../DSE09XA4**	349	30000	75000

The torques marked (*) are maximum permissible torques for service factor f_B=1.0.

2.2 kW

P_N	50 Hz			i	Typ	m		
	n_2	M_2	f_B					
[kW]	[1/min]	[Nm]	[—]	[:1]		[kg]	[N]	[N]
2.2	4.8	4350	2.6	300.6	**BK80Z-../DSE09XA4**	349	30000	75000
2.2	4.3	4850	2.4	336.7	**BK80Z-../DSE09XA4**	349	30000	75000
2.2	3.7	5600	2.1	389.0	**BK80Z-../DSE09XA4**	349	30000	75000
2.2	3.3	6300	1.85	435.7	**BK80Z-../DSE09XA4**	349	30000	75000
2.2	2.9	7200	1.6	499.5	**BK80Z-../DSE09XA4**	349	30000	75000
2.2	2.6	8000	1.45	559.5	**BK80Z-../DSE09XA4**	349	30000	75000
2.2	2.4	8000	1.45	607.8	**BK80G40-../DSE09XA4**	360	30000	75000
2.2	2.1	9100	1.25	680.9	**BK80G40-../DSE09XA4**	360	30000	75000
2.2	1.9	10200	1.15	756.3	**BK80G40-../DSE09XA4**	360	30000	75000
2.2	1.7	11400	1.0	847.2	**BK80G40-../DSE09XA4**	360	30000	75000
2.2	1.5	13100	0.88	963.0	**BK80G40-../DSE09XA4**	360	30000	75000
2.2	1.4	13900	0.83	1079	**BK80G40-../DSE09XA4**	360	30000	75000
2.2	3.7	5600	3.3	389.1	**BK90Z-../DSE09XA4**	622	49400	120000
2.2	3.3	6300	2.9	435.3	**BK90Z-../DSE09XA4**	622	49400	120000
2.2	2.9	7200	2.6	499.2	**BK90Z-../DSE09XA4**	622	49400	120000
2.2	2.6	8000	2.3	558.5	**BK90Z-../DSE09XA4**	622	49400	120000
2.2	2.3	9100	2.0	637.7	**BK90Z-../DSE09XA4**	622	49400	120000
2.2	2.0	10500	1.75	713.5	**BK90Z-../DSE09XA4**	622	49400	120000
2.2	1.8	10300	1.8	821.0	**BK90G50-../DSE09XA4**	633	49400	120000
2.2	1.7	11100	1.65	882.3	**BK90G50-../DSE09XA4**	633	49400	120000
2.2	1.5	12600	1.45	1008	**BK90G50-../DSE09XA4**	633	49400	120000
2.2	1.3	14600	1.25	1127	**BK90G50-../DSE09XA4**	633	49400	120000
2.2	1.1	17800	1.05	1363	**BK90G50-../DSE09XA4**	633	49400	120000

3 kW

P_N	50 Hz			i	Typ	m		
	n_2	M_2	f_B					
[kW]	[1/min]	[Nm]	[—]	[:1]		[kg]	[N]	[N]
3	305	86	2.3	4.73	**BK30-../DSE11SA4**	65	1550	8800
3	240	109	1.95	6.02	**BK30-../DSE11SA4**	65	1690	9600
3	191	138	1.95	7.45	**BK30-../DSE11SA4**	65	2200	10400
3	148	178	1.8	9.63	**BK30-../DSE11SA4**	65	3150	11500
3	125	205	2.0	11.39	**BK30-../DSE11SA4**	65	4150	11000
3	120	215	1.5	11.93	**BK30-../DSE11SA4**	65	3650	12000
3	102	255	1.25	13.98	**BK30-../DSE11SA4**	65	4050	12000
3	98	260	1.75	14.50	**BK30-../DSE11SA4**	65	4900	12000
3	80	320	1.4	17.95	**BK30-../DSE11SA4**	65	5300	12000
3	62	415	1.1	23.20	**BK30-../DSE11SA4**	65	5900	12000
3	49.5	520	0.87	28.76	**BK30-../DSE11SA4**	65	6500	12000
3	153	172	2.9	9.31	**BK40-../DSE11SA4**	90	1040	11200
3	120	215	2.3	11.86	**BK40-../DSE11SA4**	90	1770	12200
3	98	260	3.0	14.50	**BK40-../DSE11SA4**	90	4500	14300
3	79	325	2.4	18.05	**BK40-../DSE11SA4**	90	4900	15300
3	64	400	1.95	22.44	**BK40-../DSE11SA4**	90	5500	16500
3	50	510	1.55	28.59	**BK40-../DSE11SA4**	90	6300	17000
3	41.5	620	1.25	34.61	**BK40-../DSE11SA4**	90	6900	17000
3	35	730	1.05	40.88	**BK40-../DSE11SA4**	90	7600	17000
3	80	325	2.2	17.92	**BK50-../DSE11SA4**	120	4600	16800
3	74	345	3.0	19.33	**BK50-../DSE11SA4**	120	6900	19200
3	54	475	2.2	26.51	**BK50-../DSE11SA4**	120	7800	21200
3	40.5	630	1.65	35.21	**BK50-../DSE11SA4**	120	8700	23100
3	30	840	1.25	47.50	**BK50-../DSE11SA4**	120	10100	25700
3	23.5	1070	0.98	60.76	**BK50-../DSE11SA4**	120	11400	26000
3	19	1310	0.8	75.40	**BK50-../DSE11SA4**	120	12600	26000
3	38	750	3.1	37.80	**BK60-../DSE11SA4**	130	7300	26500
3	32	890	2.6	45.05	**BK60-../DSE11SA4**	130	8200	28300
3	28.5	1000	2.3	50.40	**BK60-../DSE11SA4**	130	9100	29800
3	24.5	1160	2.0	58.95	**BK60-../DSE11SA4**	130	9900	31500
3	22	1300	1.75	65.95	**BK60-../DSE11SA4**	130	10900	33000
3	18.5	1540	1.5	78.13	**BK60-../DSE11SA4**	130	11900	34000
3	16.5	1730	1.35	87.41	**BK60-../DSE11SA4**	130	12900	34000

The torques marked (*) are maximum permissible torques for service factor f_B=1.0.

3 kW

P_N	50 Hz			i	Typ	m		
	n_2	M_2	f_B					
[kW]	[1/min]	[Nm]	[—]	[:1]		[kg]	[N]	[N]
3	14.5	1970	1.15	101.2	**BK60-../DSE11SA4**	130	13900	34000
3	13	2200	1.05	113.2	**BK60-../DSE11SA4**	130	15000	34000
3	12	2350	0.98	122.5	**BK60-../DSE11SA4**	130	15500	34000
3	10.5	2700	0.85	137.0	**BK60-../DSE11SA4**	130	16600	34000
3	18	1590	3.3	79.89	**BK70-../DSE11SA4**	209	14300	47600
3	16	1790	2.9	90.96	**BK70-../DSE11SA4**	209	15300	49900
3	14	2000	2.6	103.5	**BK70-../DSE11SA4**	209	17200	50000
3	12	2350	2.2	120.2	**BK70-../DSE11SA4**	209	18600	50000
3	10.5	2700	1.95	136.7	**BK70-../DSE11SA4**	209	20700	50000
3	9.2	3100	1.7	154.4	**BK70-../DSE11SA4**	209	21900	50000
3	8.1	3500	1.5	175.7	**BK70-../DSE11SA4**	209	24100	50000
3	7.5	3800	1.35	190.4	**BK70Z-../DSE11SA4**	236	24100	50000
3	6.3	4500	1.15	226.2	**BK70Z-../DSE11SA4**	236	24100	50000
3	5.6	5100	1.0	257.3	**BK70Z-../DSE11SA4**	236	24100	50000
3	4.9	5800	0.9	293.3	**BK70Z-../DSE11SA4**	236	24100	50000
3	8.3	3450	3.0	171.5	**BK80-../DSE11SA4**	324	30000	75000
3	8.0	3550	3.2	177.6	**BK80Z-../DSE11SA4**	366	30000	75000
3	7.2	3950	2.9	198.9	**BK80Z-../DSE11SA4**	366	30000	75000
3	6.3	4500	2.6	226.1	**BK80Z-../DSE11SA4**	366	30000	75000
3	5.7	5000	2.3	253.3	**BK80Z-../DSE11SA4**	366	30000	75000
3	4.8	5900	1.95	300.6	**BK80Z-../DSE11SA4**	366	30000	75000
3	4.3	6600	1.75	336.7	**BK80Z-../DSE11SA4**	366	30000	75000
3	3.7	7700	1.5	389.0	**BK80Z-../DSE11SA4**	366	30000	75000
3	3.3	8600	1.35	435.7	**BK80Z-../DSE11SA4**	366	30000	75000
3	2.9	9800	1.15	499.5	**BK80Z-../DSE11SA4**	366	30000	75000
3	2.6	11000	1.05	559.5	**BK80Z-../DSE11SA4**	366	30000	75000
3	2.4	11100	1.05	607.8	**BK80G40-../DSE11SA4**	374	30000	75000
3	2.1	12800	0.9	680.9	**BK80G40-../DSE11SA4**	374	30000	75000
3	1.9	14200	0.81	756.3	**BK80G40-../DSE11SA4**	374	30000	75000
3	4.9	5800	3.2	295.6	**BK90Z-../DSE11SA4**	632	49400	120000
3	4.3	6600	2.8	330.7	**BK90Z-../DSE11SA4**	632	49400	120000
3	3.7	7700	2.4	389.1	**BK90Z-../DSE11SA4**	632	49400	120000
3	3.3	8600	2.2	435.3	**BK90Z-../DSE11SA4**	632	49400	120000
3	2.9	9800	1.9	499.2	**BK90Z-../DSE11SA4**	632	49400	120000
3	2.6	11000	1.7	558.5	**BK90Z-../DSE11SA4**	632	49400	120000
3	2.3	12400	1.5	637.7	**BK90Z-../DSE11SA4**	632	49400	120000
3	2.0	14300	1.3	713.5	**BK90Z-../DSE11SA4**	632	49400	120000
3	1.8	14500	1.3	821.0	**BK90G50-../DSE11SA4**	648	49400	120000
3	1.7	15600	1.2	882.3	**BK90G50-../DSE11SA4**	648	49400	120000
3	1.5	17700	1.05	1008	**BK90G50-../DSE11SA4**	648	49400	120000
3	1.3	20500	0.9	1127	**BK90G50-../DSE11SA4**	648	49400	120000

4 kW

P_N	50 Hz			i	Typ	m		
	n_2	M_2	f_B					
[kW]	[1/min]	[Nm]	[—]	[:1]		[kg]	[N]	[N]
4	305	115	1.7	4.73	**BK30-../DSE11MA4**	65	1550	8800
4	240	146	1.45	6.02	**BK30-../DSE11MA4**	65	1690	9600
4	191	184	1.45	7.45	**BK30-../DSE11MA4**	65	2200	10400
4	148	235	1.35	9.63	**BK30-../DSE11MA4**	65	3150	11500
4	125	275	1.5	11.39	**BK30-../DSE11MA4**	65	4150	11000
4	120	290	1.1	11.93	**BK30-../DSE11MA4**	65	3650	12000
4	102	340	0.94	13.98	**BK30-../DSE11MA4**	65	4050	12000
4	98	350	1.3	14.50	**BK30-../DSE11MA4**	65	4900	12000
4	80	425	1.05	17.95	**BK30-../DSE11MA4**	65	5300	12000
4	62	550	0.82	23.20	**BK30-../DSE11MA4**	65	5900	12000
4	240	146	3.2	6.02	**BK40-../DSE11MA4**	90	470	9800
4	190	184	2.7	7.49	**BK40-../DSE11MA4**	90	750	10500
4	153	225	2.2	9.31	**BK40-../DSE11MA4**	90	1040	11200
4	128	265	2.7	11.17	**BK40-../DSE11MA4**	90	4100	13100
4	120	290	1.7	11.86	**BK40-../DSE11MA4**	90	1770	12200

The torques marked (*) are maximum permissible torques for service factor f_B=1.0.

4 kW

P_N	50 Hz			i	Typ	m		
	n_2	M_2	f_B					
[kW]	[1/min]	[Nm]	[—]	[:1]		[kg]	[N]	[N]
4	98	350	2.2	14.50	**BK40-../DSE11MA4**	90	4500	14300
4	79	435	1.8	18.05	**BK40-../DSE11MA4**	90	4900	15300
4	64	530	1.45	22.44	**BK40-../DSE11MA4**	90	5500	16500
4	50	680	1.15	28.59	**BK40-../DSE11MA4**	90	6300	17000
4	41.5	820	0.95	34.61	**BK40-../DSE11MA4**	90	6900	17000
4	35	980	0.8	40.88	**BK40-../DSE11MA4**	90	7600	17000
4	142	245	3.3	10.00	**BK50-../DSE11MA4**	120	1220	13200
4	102	335	3.1	13.95	**BK50-../DSE11MA4**	120	6100	17400
4	94	365	2.9	15.19	**BK50-../DSE11MA4**	120	6300	18000
4	80	430	1.7	17.92	**BK50-../DSE11MA4**	120	4600	16800
4	74	460	2.3	19.33	**BK50-../DSE11MA4**	120	6900	19200
4	54	630	1.65	26.51	**BK50-../DSE11MA4**	120	7800	21200
4	40.5	840	1.25	35.21	**BK50-../DSE11MA4**	120	8700	23100
4	30	1130	0.93	47.50	**BK50-../DSE11MA4**	120	10100	25700
4	52	730	3.2	27.36	**BK60-../DSE11MA4**	130	5600	23200
4	42.5	890	2.6	33.78	**BK60-../DSE11MA4**	130	6500	25200
4	38	1000	2.3	37.80	**BK60-../DSE11MA4**	130	7300	26500
4	32	1190	1.95	45.05	**BK60-../DSE11MA4**	130	8200	28300
4	28.5	1340	1.7	50.40	**BK60-../DSE11MA4**	130	9100	29800
4	24.5	1550	1.5	58.95	**BK60-../DSE11MA4**	130	9900	31500
4	22	1730	1.35	65.95	**BK60-../DSE11MA4**	130	10900	33000
4	18.5	2050	1.1	78.13	**BK60-../DSE11MA4**	130	11900	34000
4	16.5	2300	1.0	87.41	**BK60-../DSE11MA4**	130	12900	34000
4	14.5	2600	0.88	101.2	**BK60-../DSE11MA4**	130	13900	34000
4	23.5	1620	3.2	61.60	**BK70-../DSE11MA4**	209	11500	42800
4	20.5	1860	2.8	70.23	**BK70-../DSE11MA4**	209	12500	44800
4	18	2100	2.5	79.89	**BK70-../DSE11MA4**	209	14300	47600
4	16	2350	2.2	90.96	**BK70-../DSE11MA4**	209	15300	49900
4	14	2700	1.95	103.5	**BK70-../DSE11MA4**	209	17200	50000
4	12	3150	1.65	120.2	**BK70-../DSE11MA4**	209	18600	50000
4	10.5	3600	1.45	136.7	**BK70-../DSE11MA4**	209	20700	50000
4	9.2	4150	1.25	154.4	**BK70-../DSE11MA4**	209	21900	50000
4	8.1	4700	1.1	175.7	**BK70-../DSE11MA4**	209	24100	50000
4	7.5	5000	1.05	190.4	**BK70Z-../DSE11MA4**	236	24100	50000
4	6.3	6000	0.87	226.2	**BK70Z-../DSE11MA4**	236	24100	50000
4	11	3450	3.0	131.6	**BK80-../DSE11MA4**	324	24900	75000
4	9.3	4100	2.6	153.1	**BK80-../DSE11MA4**	324	27200	75000
4	8.3	4600	2.3	171.5	**BK80-../DSE11MA4**	324	30000	75000
4	8.0	4750	2.4	177.6	**BK80Z-../DSE11MA4**	366	30000	75000
4	7.2	5300	2.2	198.9	**BK80Z-../DSE11MA4**	366	30000	75000
4	6.3	6000	1.9	226.1	**BK80Z-../DSE11MA4**	366	30000	75000
4	5.7	6700	1.7	253.3	**BK80Z-../DSE11MA4**	366	30000	75000
4	4.8	7900	1.45	300.6	**BK80Z-../DSE11MA4**	366	30000	75000
4	4.3	8800	1.3	336.7	**BK80Z-../DSE11MA4**	366	30000	75000
4	3.7	10300	1.1	389.0	**BK80Z-../DSE11MA4**	366	30000	75000
4	3.3	11500	1.0	435.7	**BK80Z-../DSE11MA4**	366	30000	75000
4	2.9	13100	0.88	499.5	**BK80Z-../DSE11MA4**	366	30000	75000
4	6.1	6200	3.0	234.6	**BK90Z-../DSE11MA4**	632	49400	120000
4	5.5	6900	2.7	262.5	**BK90Z-../DSE11MA4**	632	49400	120000
4	4.9	7700	2.4	295.6	**BK90Z-../DSE11MA4**	632	49400	120000
4	4.3	8800	2.1	330.7	**BK90Z-../DSE11MA4**	632	49400	120000
4	3.7	10300	1.8	389.1	**BK90Z-../DSE11MA4**	632	49400	120000
4	3.3	11500	1.6	435.3	**BK90Z-../DSE11MA4**	632	49400	120000
4	2.9	13100	1.4	499.2	**BK90Z-../DSE11MA4**	632	49400	120000
4	2.6	14600	1.25	558.5	**BK90Z-../DSE11MA4**	632	49400	120000
4	2.3	16600	1.1	637.7	**BK90Z-../DSE11MA4**	632	49400	120000
4	2.0	19100	0.97	713.5	**BK90Z-../DSE11MA4**	632	49400	120000
4	1.8	19800	0.93	821.0	**BK90G50-../DSE11MA4**	648	49400	120000
4	1.7	21200	0.87	882.3	**BK90G50-../DSE11MA4**	648	49400	120000

The torques marked (*) are maximum permissible torques for service factor f_B=1.0.

5.5 kW

P_N	50 Hz			i	Typ	m		
	n_2	M_2	f_B					
[kW]	[1/min]	[Nm]	[—]	[:1]		[kg]	[N]	[N]
5.5	305	158	1.25	4.73	**BK30-../DSE11LA4**	76	1550	8800
5.5	240	200	1.05	6.02	**BK30-../DSE11LA4**	76	1690	9600
5.5	191	250	1.05	7.45	**BK30-../DSE11LA4**	76	2200	10400
5.5	148	325	0.98	9.63	**BK30-../DSE11LA4**	76	3150	11500
5.5	125	375	1.1	11.39	**BK30-../DSE11LA4**	76	4150	11000
5.5	120	400	0.8	11.93	**BK30-../DSE11LA4**	76	3650	12000
5.5	98	480	0.94	14.50	**BK30-../DSE11LA4**	76	4900	12000
5.5	310	155	2.8	4.63	**BK40-../DSE11LA4**	102	430	8900
5.5	240	200	2.4	6.02	**BK40-../DSE11LA4**	102	470	9800
5.5	190	250	1.95	7.49	**BK40-../DSE11LA4**	102	750	10500
5.5	153	315	1.55	9.31	**BK40-../DSE11LA4**	102	1040	11200
5.5	128	365	1.95	11.17	**BK40-../DSE11LA4**	102	4100	13100
5.5	120	400	1.25	11.86	**BK40-../DSE11LA4**	102	1770	12200
5.5	98	480	1.65	14.50	**BK40-../DSE11LA4**	102	4500	14300
5.5	79	590	1.3	18.05	**BK40-../DSE11LA4**	102	4900	15300
5.5	64	730	1.05	22.44	**BK40-../DSE11LA4**	102	5500	16500
5.5	50	940	0.83	28.59	**BK40-../DSE11LA4**	102	6300	17000
5.5	195	245	3.3	7.29	**BK50-../DSE11LA4**	132	620	111000
5.5	146	320	2.9	9.73	**BK50-../DSE11LA4**	132	5400	15400
5.5	142	340	2.4	10.00	**BK50-../DSE11LA4**	132	1220	13200
5.5	102	460	2.3	13.95	**BK50-../DSE11LA4**	132	6100	17400
5.5	94	500	2.1	15.19	**BK50-../DSE11LA4**	132	6300	18000
5.5	80	590	1.25	17.92	**BK50-../DSE11LA4**	132	4600	16800
5.5	74	630	1.65	19.33	**BK50-../DSE11LA4**	132	6900	19200
5.5	54	870	1.2	26.51	**BK50-../DSE11LA4**	132	7800	21200
5.5	40.5	1160	0.91	35.21	**BK50-../DSE11LA4**	132	8700	23100
5.5	89	590	3.3	16.05	**BK60-../DSE11LA4**	142	4050	18800
5.5	78	670	3.3	18.36	**BK60-../DSE11LA4**	142	4000	19900
5.5	70	750	3.0	20.54	**BK60-../DSE11LA4**	142	4400	20600
5.5	59	890	2.6	24.45	**BK60-../DSE11LA4**	142	4850	22000
5.5	52	1010	2.3	27.36	**BK60-../DSE11LA4**	142	5600	23200
5.5	42.5	1230	1.85	33.78	**BK60-../DSE11LA4**	142	6500	25200
5.5	38	1380	1.65	37.80	**BK60-../DSE11LA4**	142	7300	26500
5.5	32	1640	1.4	45.05	**BK60-../DSE11LA4**	142	8200	28300
5.5	28.5	1840	1.25	50.40	**BK60-../DSE11LA4**	142	9100	29800
5.5	24.5	2100	1.1	58.95	**BK60-../DSE11LA4**	142	9900	31500
5.5	22	2350	0.98	65.95	**BK60-../DSE11LA4**	142	10900	33000
5.5	18.5	2800	0.82	78.13	**BK60-../DSE11LA4**	142	11900	34000
5.5	35.5	1470	3.3	40.08	**BK70-../DSE11LA4**	221	8300	36300
5.5	31.5	1660	3.1	45.59	**BK70-../DSE11LA4**	221	9000	37900
5.5	26.5	1980	2.6	54.15	**BK70-../DSE11LA4**	221	9900	40200
5.5	23.5	2200	2.4	61.60	**BK70-../DSE11LA4**	221	11500	42800
5.5	20.5	2550	2.0	70.23	**BK70-../DSE11LA4**	221	12500	44800
5.5	18	2900	1.8	79.89	**BK70-../DSE11LA4**	221	14300	47600
5.5	16	3250	1.6	90.96	**BK70-../DSE11LA4**	221	15300	49900
5.5	14	3750	1.4	103.5	**BK70-../DSE11LA4**	221	17200	50000
5.5	12	4350	1.2	120.2	**BK70-../DSE11LA4**	221	18600	50000
5.5	10.5	5000	1.05	136.7	**BK70-../DSE11LA4**	221	20700	50000
5.5	9.2	5700	0.91	154.4	**BK70-../DSE11LA4**	221	21900	50000
5.5	8.1	6400	0.81	175.7	**BK70-../DSE11LA4**	221	24100	50000
5.5	16	3250	3.2	91.53	**BK80-../DSE11LA4**	336	18300	74200
5.5	14	3750	2.8	102.5	**BK80-../DSE11LA4**	336	20500	75000
5.5	12.5	4200	2.5	117.5	**BK80-../DSE11LA4**	336	22300	75000
5.5	11	4750	2.2	131.6	**BK80-../DSE11LA4**	336	24900	75000
5.5	9.3	5600	1.9	153.1	**BK80-../DSE11LA4**	336	27200	75000
5.5	8.3	6300	1.65	171.5	**BK80-../DSE11LA4**	336	30000	75000
5.5	8.0	6500	1.75	177.6	**BK80Z-../DSE11LA4**	378	30000	75000
5.5	7.2	7200	1.6	198.9	**BK80Z-../DSE11LA4**	378	30000	75000
5.5	6.3	8300	1.4	226.1	**BK80Z-../DSE11LA4**	378	30000	75000
5.5	5.7	9200	1.25	253.3	**BK80Z-../DSE11LA4**	378	30000	75000
5.5	4.8	10900	1.05	300.6	**BK80Z-../DSE11LA4**	378	30000	75000
5.5	4.3	12200	0.94	336.7	**BK80Z-../DSE11LA4**	378	30000	75000
5.5	3.7	14100	0.82	389.0	**BK80Z-../DSE11LA4**	378	30000	75000
5.5	8.2	6400	2.9	174.7	**BK90Z-../DSE11LA4**	643	49400	120000

The torques marked (*) are maximum permissible torques for service factor f_B=1.0.

5.5 kW

P_N	50 Hz			i	Typ	m		
	n_2	M_2	f_B					
[kW]	[1/min]	[Nm]	[—]	[:1]		[kg]	[N]	[N]
5.5	7.3	7100	2.6	195.4	**BK90Z-../DSE11LA4**	643	49400	120000
5.5	6.1	8600	2.2	234.6	**BK90Z-../DSE11LA4**	643	49400	120000
5.5	5.5	9500	1.95	262.5	**BK90Z-../DSE11LA4**	643	49400	120000
5.5	4.9	10700	1.75	295.6	**BK90Z-../DSE11LA4**	643	49400	120000
5.5	4.3	12200	1.5	330.7	**BK90Z-../DSE11LA4**	643	49400	120000
5.5	3.7	14100	1.3	389.1	**BK90Z-../DSE11LA4**	643	49400	120000
5.5	3.3	15900	1.15	435.3	**BK90Z-../DSE11LA4**	643	49400	120000
5.5	2.9	18100	1.0	499.2	**BK90Z-../DSE11LA4**	643	49400	120000
5.5	2.6	20200	0.92	558.5	**BK90Z-../DSE11LA4**	643	49400	120000
5.5	2.3	22800	0.81	637.7	**BK90Z-../DSE11LA4**	643	49400	120000

7.5 kW

P_N	50 Hz			i	Typ	m		
	n_2	M_2	f_B					
[kW]	[1/min]	[Nm]	[—]	[:1]		[kg]	[N]	[N]
7.5	395	166	4.3	3.67	**BK50-../DSE13MA4**	143	115	9400
7.5	275	235	3.5	5.26	**BK50-../DSE13MA4**	143	130	10700
7.5	198	330	2.5	7.29	**BK50-../DSE13MA4**	143	620	111000
7.5	148	435	2.1	9.73	**BK50-../DSE13MA4**	143	5400	15400
7.5	144	455	1.8	10.00	**BK50-../DSE13MA4**	143	1220	13200
7.5	104	610	1.7	13.95	**BK50-../DSE13MA4**	143	6100	17400
7.5	95	670	1.55	15.19	**BK50-../DSE13MA4**	143	6300	18000
7.5	81	800	0.91	17.92	**BK50-../DSE13MA4**	143	4600	16800
7.5	75	850	1.25	19.33	**BK50-../DSE13MA4**	143	6900	19200
7.5	55	1170	0.9	26.51	**BK50-../DSE13MA4**	143	7800	21200
7.5	134	530	3.2	10.82	**BK60-../DSE13MA4**	155	3200	17000
7.5	117	610	3.1	12.38	**BK60-../DSE13MA4**	155	3500	17400
7.5	104	680	2.9	13.85	**BK60-../DSE13MA4**	155	3850	18000
7.5	100	710	2.7	14.41	**BK60-../DSE13MA4**	155	3650	18600
7.5	90	790	2.5	16.05	**BK60-../DSE13MA4**	155	4050	18800
7.5	79	900	2.4	18.36	**BK60-../DSE13MA4**	155	4000	19900
7.5	71	1000	2.3	20.54	**BK60-../DSE13MA4**	155	4400	20600
7.5	59	1210	1.9	24.45	**BK60-../DSE13MA4**	155	4850	22000
7.5	53	1350	1.7	27.36	**BK60-../DSE13MA4**	155	5600	23200
7.5	43	1660	1.4	33.78	**BK60-../DSE13MA4**	155	6500	25200
7.5	38.5	1860	1.25	37.80	**BK60-../DSE13MA4**	155	7300	26500
7.5	32	2200	1.05	45.05	**BK60-../DSE13MA4**	155	8200	28300
7.5	29	2450	0.94	50.40	**BK60-../DSE13MA4**	155	9100	29800
7.5	47	1520	3.0	30.90	**BK70-../DSE13MA4**	234	7500	33600
7.5	41	1740	2.7	35.15	**BK70-../DSE13MA4**	234	8000	35000
7.5	36	1980	2.5	40.08	**BK70-../DSE13MA4**	234	8300	36300
7.5	32	2200	2.3	45.59	**BK70-../DSE13MA4**	234	9000	37900
7.5	27	2650	1.95	54.15	**BK70-../DSE13MA4**	234	9900	40200
7.5	23.5	3000	1.75	61.60	**BK70-../DSE13MA4**	234	11500	42800
7.5	21	3400	1.55	70.23	**BK70-../DSE13MA4**	234	12500	44800
7.5	18.5	3850	1.35	79.89	**BK70-../DSE13MA4**	234	14300	47600
7.5	16	4450	1.15	90.96	**BK70-../DSE13MA4**	234	15300	49900
7.5	14	5100	1.0	103.5	**BK70-../DSE13MA4**	234	17200	50000
7.5	12	5900	0.88	120.2	**BK70-../DSE13MA4**	234	18600	50000
7.5	11	6500	0.8	136.7	**BK70-../DSE13MA4**	234	20700	50000
7.5	24.5	2900	3.2	59.60	**BK80-../DSE13MA4**	348	15700	65500
7.5	20.5	3450	2.8	70.72	**BK80-../DSE13MA4**	348	16600	68700
7.5	18.5	3850	2.6	79.22	**BK80-../DSE13MA4**	348	17600	71300
7.5	16	4450	2.3	91.53	**BK80-../DSE13MA4**	348	18300	74200
7.5	14.5	4900	2.1	102.5	**BK80-../DSE13MA4**	348	20500	75000
7.5	12.5	5700	1.85	117.5	**BK80-../DSE13MA4**	348	22300	75000
7.5	11	6500	1.6	131.6	**BK80-../DSE13MA4**	348	24900	75000
7.5	9.5	7500	1.4	153.1	**BK80-../DSE13MA4**	348	27200	75000
7.5	8.4	8500	1.25	171.5	**BK80-../DSE13MA4**	348	30000	75000
7.5	8.2	8700	1.3	177.6	**BK80Z-../DSE13MA4**	391	30000	75000
7.5	7.3	9800	1.15	198.9	**BK80Z-../DSE13MA4**	391	30000	75000
7.5	6.4	11100	1.05	226.1	**BK80Z-../DSE13MA4**	391	30000	75000

The torques marked (*) are maximum permissible torques for service factor f_B=1.0.

7.5 kW

P_N	50 Hz			i	Typ	m		
	n_2	M_2	f_B					
[kW]	[1/min]	[Nm]	[—]	[:1]		[kg]	[N]	[N]
7.5	5.7	12500	0.92	253.3	**BK80Z-../DSE13MA4**	391	30000	75000
7.5	12.5	5700	2.9	117.0	**BK90-../DSE13MA4**	600	39200	113000
7.5	11.5	6200	2.7	130.9	**BK90-../DSE13MA4**	600	42700	119400
7.5	9.7	7300	2.3	149.5	**BK90-../DSE13MA4**	600	45600	120000
7.5	8.7	8200	2.0	167.2	**BK90-../DSE13MA4**	600	49400	120000
7.5	8.3	8600	2.2	174.7	**BK90Z-../DSE13MA4**	656	49400	120000
7.5	7.4	9600	1.95	195.4	**BK90Z-../DSE13MA4**	656	49400	120000
7.5	6.2	11500	1.6	234.6	**BK90Z-../DSE13MA4**	656	49400	120000
7.5	5.5	13000	1.4	262.5	**BK90Z-../DSE13MA4**	656	49400	120000
7.5	4.9	14600	1.25	295.6	**BK90Z-../DSE13MA4**	656	49400	120000
7.5	4.4	16200	1.15	330.7	**BK90Z-../DSE13MA4**	656	49400	120000
7.5	3.8	18800	0.98	389.1	**BK90Z-../DSE13MA4**	656	49400	120000
7.5	3.4	21000	0.88	435.3	**BK90Z-../DSE13MA4**	656	49400	120000

9.5 kW

P_N	50 Hz			i	Typ	m		
	n_2	M_2	f_B					
[kW]	[1/min]	[Nm]	[—]	[:1]		[kg]	[N]	[N]
9.5	395	210	3.4	3.67	**BK50-../DSE13LA4**	146	115	9400
9.5	275	300	2.7	5.26	**BK50-../DSE13LA4**	146	130	10700
9.5	198	420	1.95	7.29	**BK50-../DSE13LA4**	146	620	111000
9.5	148	550	1.7	9.73	**BK50-../DSE13LA4**	146	5400	15400
9.5	144	570	1.4	10.00	**BK50-../DSE13LA4**	146	1220	13200
9.5	104	780	1.35	13.95	**BK50-../DSE13LA4**	146	6100	17400
9.5	95	850	1.25	15.19	**BK50-../DSE13LA4**	146	6300	18000
9.5	75	1080	0.97	19.33	**BK50-../DSE13LA4**	146	6900	19200
9.5	198	455	3.2	7.29	**BK60-../DSE13LA4**	158	2800	14900
9.5	134	670	2.5	10.82	**BK60-../DSE13LA4**	158	3200	17000
9.5	117	770	2.4	12.38	**BK60-../DSE13LA4**	158	3500	17400
9.5	104	870	2.3	13.85	**BK60-../DSE13LA4**	158	3850	18000
9.5	100	900	2.1	14.41	**BK60-../DSE13LA4**	158	3650	18600
9.5	90	1000	1.95	16.05	**BK60-../DSE13LA4**	158	4050	18800
9.5	79	1140	1.9	18.36	**BK60-../DSE13LA4**	158	4000	19900
9.5	71	1270	1.75	20.54	**BK60-../DSE13LA4**	158	4400	20600
9.5	59	1530	1.5	24.45	**BK60-../DSE13LA4**	158	4850	22000
9.5	53	1710	1.35	27.36	**BK60-../DSE13LA4**	158	5600	23200
9.5	43	2100	1.1	33.78	**BK60-../DSE13LA4**	158	6500	25200
9.5	38.5	2350	0.98	37.80	**BK60-../DSE13LA4**	158	7300	26500
9.5	32	2800	0.82	45.05	**BK60-../DSE13LA4**	158	8200	28300
9.5	95	950	3.2	15.16	**BK70-../DSE13LA4**	237	5600	25800
9.5	84	1080	3.2	17.24	**BK70-../DSE13LA4**	237	6500	29200
9.5	66	1370	3.0	21.88	**BK70-../DSE13LA4**	237	6500	30200
9.5	58	1560	2.7	24.89	**BK70-../DSE13LA4**	237	7000	31500
9.5	47	1930	2.3	30.90	**BK70-../DSE13LA4**	237	7500	33600
9.5	41	2200	2.2	35.15	**BK70-../DSE13LA4**	237	8000	35000
9.5	36	2500	1.95	40.08	**BK70-../DSE13LA4**	237	8300	36300
9.5	32	2800	1.85	45.59	**BK70-../DSE13LA4**	237	9000	37900
9.5	27	3350	1.55	54.15	**BK70-../DSE13LA4**	237	9900	40200
9.5	23.5	3850	1.35	61.60	**BK70-../DSE13LA4**	237	11500	42800
9.5	21	4300	1.2	70.23	**BK70-../DSE13LA4**	237	12500	44800
9.5	18.5	4900	1.05	79.89	**BK70-../DSE13LA4**	237	14300	47600
9.5	16	5600	0.93	90.96	**BK70-../DSE13LA4**	237	15300	49900
9.5	14	6400	0.81	103.5	**BK70-../DSE13LA4**	237	17200	50000
9.5	34.5	2600	3.2	41.78	**BK80-../DSE13LA4**	351	13500	58700
9.5	31	2900	3.0	46.80	**BK80-../DSE13LA4**	351	14300	60900
9.5	27.5	3250	2.7	53.21	**BK80-../DSE13LA4**	351	14800	63100
9.5	24.5	3700	2.5	59.60	**BK80-../DSE13LA4**	351	15700	65500
9.5	20.5	4400	2.2	70.72	**BK80-../DSE13LA4**	351	16600	68700
9.5	18.5	4900	2.1	79.22	**BK80-../DSE13LA4**	351	17600	71300
9.5	16	5600	1.85	91.53	**BK80-../DSE13LA4**	351	18300	74200
9.5	14.5	6200	1.7	102.5	**BK80-../DSE13LA4**	351	20500	75000

The torques marked (*) are maximum permissible torques for service factor f_B=1.0.

9.5 kW

P_N	50 Hz			i	Typ	m		
	n_2	M_2	f_B					
[kW]	[1/min]	[Nm]	[—]	[:1]		[kg]	[N]	[N]
9.5	12.5	7200	1.45	117.5	**BK80-../DSE13LA4**	351	22300	75000
9.5	11	8200	1.3	131.6	**BK80-../DSE13LA4**	351	24900	75000
9.5	9.5	9500	1.1	153.1	**BK80-../DSE13LA4**	351	27200	75000
9.5	8.4	10800	0.97	171.5	**BK80-../DSE13LA4**	351	30000	75000
9.5	8.2	11000	1.05	177.6	**BK80Z-../DSE13LA4**	394	30000	75000
9.5	7.3	12400	0.93	198.9	**BK80Z-../DSE13LA4**	394	30000	75000
9.5	6.4	14100	0.82	226.1	**BK80Z-../DSE13LA4**	394	30000	75000
9.5	16	5600	3.0	91.19	**BK90-../DSE13LA4**	603	33300	101000
9.5	14.5	6200	2.7	102.0	**BK90-../DSE13LA4**	603	36600	107000
9.5	12.5	7200	2.3	117.0	**BK90-../DSE13LA4**	603	39200	113000
9.5	11.5	7800	2.2	130.9	**BK90-../DSE13LA4**	603	42700	119400
9.5	9.7	9300	1.8	149.5	**BK90-../DSE13LA4**	603	45600	120000
9.5	8.7	10400	1.6	167.2	**BK90-../DSE13LA4**	603	49400	120000
9.5	8.3	10900	1.7	174.7	**BK90Z-../DSE13LA4**	659	49400	120000
9.5	7.4	12200	1.5	195.4	**BK90Z-../DSE13LA4**	659	49400	120000
9.5	6.2	14600	1.25	234.6	**BK90Z-../DSE13LA4**	659	49400	120000
9.5	5.5	16400	1.15	262.5	**BK90Z-../DSE13LA4**	659	49400	120000
9.5	4.9	18500	1.0	295.6	**BK90Z-../DSE13LA4**	659	49400	120000
9.5	4.4	20600	0.9	330.7	**BK90Z-../DSE13LA4**	659	49400	120000

11 kW

P_N	50 Hz			i	Typ	m		
	n_2	M_2	f_B					
[kW]	[1/min]	[Nm]	[—]	[:1]		[kg]	[N]	[N]
11	400	240	3.0	3.67	**BK50-../DSE16MB4**	170	115	9400
11	280	345	2.4	5.26	**BK50-../DSE16MB4**	170	130	10700
11	205	470	1.75	7.29	**BK50-../DSE16MB4**	170	620	111000
11	151	620	1.5	9.73	**BK50-../DSE16MB4**	170	5400	15400
11	146	660	1.25	10.00	**BK50-../DSE16MB4**	170	1220	13200
11	105	900	1.15	13.95	**BK50-../DSE16MB4**	170	6100	17400
11	97	970	1.1	15.19	**BK50-../DSE16MB4**	170	6300	18000
11	76	1240	0.85	19.33	**BK50-../DSE16MB4**	170	6900	19200
11	205	510	2.9	7.29	**BK60-../DSE16MB4**	182	2800	14900
11	135	770	2.2	10.82	**BK60-../DSE16MB4**	182	3200	17000
11	118	890	2.1	12.38	**BK60-../DSE16MB4**	182	3500	17400
11	106	990	2.0	13.85	**BK60-../DSE16MB4**	182	3850	18000
11	102	1020	1.9	14.41	**BK60-../DSE16MB4**	182	3650	18600
11	91	1150	1.7	16.05	**BK60-../DSE16MB4**	182	4050	18800
11	80	1310	1.65	18.36	**BK60-../DSE16MB4**	182	4000	19900
11	72	1450	1.55	20.54	**BK60-../DSE16MB4**	182	4400	20600
11	60	1750	1.3	24.45	**BK60-../DSE16MB4**	182	4850	22000
11	54	1940	1.2	27.36	**BK60-../DSE16MB4**	182	5600	23200
11	43.5	2400	0.96	33.78	**BK60-../DSE16MB4**	182	6500	25200
11	39	2650	0.87	37.80	**BK60-../DSE16MB4**	182	7300	26500
11	107	980	3.1	13.70	**BK70-../DSE16MB4**	265	5400	24800
11	97	1080	2.8	15.16	**BK70-../DSE16MB4**	265	5600	25800
11	85	1230	2.8	17.24	**BK70-../DSE16MB4**	265	6500	29200
11	67	1560	2.6	21.88	**BK70-../DSE16MB4**	265	6500	30200
11	59	1780	2.4	24.89	**BK70-../DSE16MB4**	265	7000	31500
11	47.5	2200	2.1	30.90	**BK70-../DSE16MB4**	265	7500	33600
11	42	2500	1.9	35.15	**BK70-../DSE16MB4**	265	8000	35000
11	36.5	2850	1.7	40.08	**BK70-../DSE16MB4**	265	8300	36300
11	32.5	3200	1.6	45.59	**BK70-../DSE16MB4**	265	9000	37900
11	27	3850	1.35	54.15	**BK70-../DSE16MB4**	265	9900	40200
11	24	4350	1.2	61.60	**BK70-../DSE16MB4**	265	11500	42800
11	21	5000	1.05	70.23	**BK70-../DSE16MB4**	265	12500	44800
11	18.5	5600	0.93	79.89	**BK70-../DSE16MB4**	265	14300	47600
11	16.5	6300	0.83	90.96	**BK70-../DSE16MB4**	265	15300	49900
11	43	2400	3.3	34.22	**BK80-../DSE16MB4**	374	12600	55400
11	35	3000	2.7	41.78	**BK80-../DSE16MB4**	374	13500	58700
11	31.5	3300	2.6	46.80	**BK80-../DSE16MB4**	374	14300	60900

The torques marked (*) are maximum permissible torques for service factor f_B=1.0.

11 kW

P_N	50 Hz			i	Typ	m		
	n_2	M_2	f_B					
[kW]	[1/min]	[Nm]	[—]	[:1]		[kg]	[N]	[N]
11	27.5	3800	2.3	53.21	**BK80-../DSE16MB4**	374	14800	63100
11	24.5	4250	2.2	59.60	**BK80-../DSE16MB4**	374	15700	65500
11	21	5000	1.95	70.72	**BK80-../DSE16MB4**	374	16600	68700
11	18.5	5600	1.8	79.22	**BK80-../DSE16MB4**	374	17600	71300
11	16	6500	1.6	91.53	**BK80-../DSE16MB4**	374	18300	74200
11	14.5	7200	1.45	102.5	**BK80-../DSE16MB4**	374	20500	75000
11	12.5	8400	1.25	117.5	**BK80-../DSE16MB4**	374	22300	75000
11	11.5	9100	1.15	131.6	**BK80-../DSE16MB4**	374	24900	75000
11	9.6	10900	0.96	153.1	**BK80-../DSE16MB4**	374	27200	75000
11	8.6	12200	0.86	171.5	**BK80-../DSE16MB4**	374	30000	75000
11	8.3	12600	0.91	177.6	**BK80Z-../DSE16MB4**	418	30000	75000
11	7.4	14100	0.82	198.9	**BK80Z-../DSE16MB4**	418	30000	75000
11	19	5500	3.1	77.51	**BK90-../DSE16MB4**	628	30300	94400
11	16.5	6300	2.7	91.19	**BK90-../DSE16MB4**	628	33300	101000
11	14.5	7200	2.3	102.0	**BK90-../DSE16MB4**	628	36600	107000
11	12.5	8400	2.0	117.0	**BK90-../DSE16MB4**	628	39200	113000
11	11.5	9100	1.85	130.9	**BK90-../DSE16MB4**	628	42700	119400
11	9.8	10700	1.55	149.5	**BK90-../DSE16MB4**	628	45600	120000
11	8.8	11900	1.4	167.2	**BK90-../DSE16MB4**	628	49400	120000
11	8.4	12500	1.5	174.7	**BK90Z-../DSE16MB4**	687	49400	120000
11	7.5	14000	1.3	195.4	**BK90Z-../DSE16MB4**	687	49400	120000
11	6.3	16600	1.1	234.6	**BK90Z-../DSE16MB4**	687	49400	120000
11	5.6	18700	0.99	262.5	**BK90Z-../DSE16MB4**	687	49400	120000
11	5.0	21000	0.88	295.6	**BK90Z-../DSE16MB4**	687	49400	120000

15 kW

P_N	50 Hz			i	Typ	m		
	n_2	M_2	f_B					
[kW]	[1/min]	[Nm]	[—]	[:1]		[kg]	[N]	[N]
15	400	325	2.2	3.67	**BK50-../DSE16LB4**	183	115	9400
15	280	470	1.75	5.26	**BK50-../DSE16LB4**	183	130	10700
15	205	640	1.25	7.29	**BK50-../DSE16LB4**	183	620	111000
15	151	850	1.1	9.73	**BK50-../DSE16LB4**	183	5400	15400
15	146	900	0.9	10.00	**BK50-../DSE16LB4**	183	1220	13200
15	105	1220	0.86	13.95	**BK50-../DSE16LB4**	183	6100	17400
15	97	1320	0.8	15.19	**BK50-../DSE16LB4**	183	6300	18000
15	205	690	2.1	7.29	**BK60-../DSE16LB4**	195	2800	14900
15	135	1060	1.6	10.82	**BK60-../DSE16LB4**	195	3200	17000
15	118	1210	1.55	12.38	**BK60-../DSE16LB4**	195	3500	17400
15	106	1350	1.45	13.85	**BK60-../DSE16LB4**	195	3850	18000
15	102	1400	1.4	14.41	**BK60-../DSE16LB4**	195	3650	18600
15	91	1570	1.25	16.05	**BK60-../DSE16LB4**	195	4050	18800
15	80	1790	1.2	18.36	**BK60-../DSE16LB4**	195	4000	19900
15	72	1980	1.15	20.54	**BK60-../DSE16LB4**	195	4400	20600
15	60	2350	0.98	24.45	**BK60-../DSE16LB4**	195	4850	22000
15	54	2650	0.87	27.36	**BK60-../DSE16LB4**	195	5600	23200
15	107	1330	2.3	13.70	**BK70-../DSE16LB4**	278	5400	24800
15	97	1470	2.1	15.16	**BK70-../DSE16LB4**	278	5600	25800
15	85	1680	2.1	17.24	**BK70-../DSE16LB4**	278	6500	29200
15	67	2100	1.95	21.88	**BK70-../DSE16LB4**	278	6500	30200
15	59	2400	1.8	24.89	**BK70-../DSE16LB4**	278	7000	31500
15	47.5	3000	1.5	30.90	**BK70-../DSE16LB4**	278	7500	33600
15	42	3400	1.4	35.15	**BK70-../DSE16LB4**	278	8000	35000
15	36.5	3900	1.25	40.08	**BK70-../DSE16LB4**	278	8300	36300
15	32.5	4400	1.15	45.59	**BK70-../DSE16LB4**	278	9000	37900
15	27	5300	0.98	54.15	**BK70-../DSE16LB4**	278	9900	40200
15	24	5900	0.88	61.60	**BK70-../DSE16LB4**	278	11500	42800
15	48	2950	2.5	30.56	**BK80-../DSE16LB4**	388	11900	53400
15	43	3300	2.4	34.22	**BK80-../DSE16LB4**	388	12600	55400
15	35	4050	2.0	41.78	**BK80-../DSE16LB4**	388	13500	58700
15	31.5	4500	1.9	46.80	**BK80-../DSE16LB4**	388	14300	60900

The torques marked (*) are maximum permissible torques for service factor f_B=1.0.

15 kW

P_N	50 Hz			i	**Typ**	m		
	n_2	M_2	f_B					
[kW]	[1/min]	[Nm]	[—]	[:1]		[kg]	[N]	[N]
15	27.5	5200	1.7	53.21	**BK80-../DSE16LB4**	388	14800	63100
15	24.5	5800	1.6	59.60	**BK80-../DSE16LB4**	388	15700	65500
15	21	6800	1.4	70.72	**BK80-../DSE16LB4**	388	16600	68700
15	18.5	7700	1.3	79.22	**BK80-../DSE16LB4**	388	17600	71300
15	16	8900	1.15	91.53	**BK80-../DSE16LB4**	388	18300	74200
15	14.5	9800	1.05	102.5	**BK80-../DSE16LB4**	388	20500	75000
15	12.5	11400	0.92	117.5	**BK80-../DSE16LB4**	388	22300	75000
15	11.5	12400	0.85	131.6	**BK80-../DSE16LB4**	388	24900	75000
15	27	5300	3.0	54.98	**BK90-../DSE16LB4**	641	24000	81000
15	24	5900	2.8	61.52	**BK90-../DSE16LB4**	641	25500	84600
15	21.5	6600	2.5	69.27	**BK90-../DSE16LB4**	641	27200	88900
15	19	7500	2.2	77.51	**BK90-../DSE16LB4**	641	30300	94400
15	16.5	8600	1.95	91.19	**BK90-../DSE16LB4**	641	33300	101000
15	14.5	9800	1.7	102.0	**BK90-../DSE16LB4**	641	36600	107000
15	12.5	11400	1.45	117.0	**BK90-../DSE16LB4**	641	39200	113000
15	11.5	12400	1.35	130.9	**BK90-../DSE16LB4**	641	42700	119400
15	9.8	14600	1.15	149.5	**BK90-../DSE16LB4**	641	45600	120000
15	8.8	16200	1.05	167.2	**BK90-../DSE16LB4**	641	49400	120000
15	8.4	17000	1.1	174.7	**BK90Z-../DSE16LB4**	700	49400	120000
15	7.5	19100	0.97	195.4	**BK90Z-../DSE16LB4**	700	49400	120000
15	6.3	22700	0.81	234.6	**BK90Z-../DSE16LB4**	700	49400	120000

18.5 kW

P_N	50 Hz			i	**Typ**	m		
	n_2	M_2	f_B					
[kW]	[1/min]	[Nm]	[—]	[:1]		[kg]	[N]	[N]
18.5	400	405	1.75	3.67	**BK50-../DSE16XB4**	193	115	9400
18.5	280	580	1.4	5.26	**BK50-../DSE16XB4**	193	130	10700
18.5	205	790	1.05	7.29	**BK50-../DSE16XB4**	193	620	111000
18.5	151	1050	0.89	9.73	**BK50-../DSE16XB4**	193	5400	15400
18.5	205	860	1.7	7.29	**BK60-../DSE16XB4**	205	2800	14900
18.5	135	1300	1.3	10.82	**BK60-../DSE16XB4**	205	3200	17000
18.5	118	1490	1.25	12.38	**BK60-../DSE16XB4**	205	3500	17400
18.5	106	1660	1.2	13.85	**BK60-../DSE16XB4**	205	3850	18000
18.5	102	1730	1.1	14.41	**BK60-../DSE16XB4**	205	3650	18600
18.5	91	1940	1.0	16.05	**BK60-../DSE16XB4**	205	4050	18800
18.5	80	2200	0.99	18.36	**BK60-../DSE16XB4**	205	4000	19900
18.5	72	2450	0.92	20.54	**BK60-../DSE16XB4**	205	4400	20600
18.5	107	1650	1.85	13.70	**BK70-../DSE16XB4**	288	5400	24800
18.5	97	1820	1.7	15.16	**BK70-../DSE16XB4**	288	5600	25800
18.5	85	2050	1.7	17.24	**BK70-../DSE16XB4**	288	6500	29200
18.5	67	2600	1.55	21.88	**BK70-../DSE16XB4**	288	6500	30200
18.5	59	2950	1.45	24.89	**BK70-../DSE16XB4**	288	7000	31500
18.5	47.5	3700	1.2	30.90	**BK70-../DSE16XB4**	288	7500	33600
18.5	42	4200	1.15	35.15	**BK70-../DSE16XB4**	288	8000	35000
18.5	36.5	4800	1.0	40.08	**BK70-../DSE16XB4**	288	8300	36300
18.5	32.5	5400	0.95	45.59	**BK70-../DSE16XB4**	288	9000	37900
18.5	27	6500	0.8	54.15	**BK70-../DSE16XB4**	288	9900	40200
18.5	48	3650	2.1	30.56	**BK80-../DSE16XB4**	398	11900	53400
18.5	43	4100	1.9	34.22	**BK80-../DSE16XB4**	398	12600	55400
18.5	35	5000	1.65	41.78	**BK80-../DSE16XB4**	398	13500	58700
18.5	31.5	5600	1.55	46.80	**BK80-../DSE16XB4**	398	14300	60900
18.5	27.5	6400	1.4	53.21	**BK80-../DSE16XB4**	398	14800	63100
18.5	24.5	7200	1.3	59.60	**BK80-../DSE16XB4**	398	15700	65500
18.5	21	8400	1.15	70.72	**BK80-../DSE16XB4**	398	16600	68700
18.5	18.5	9500	1.05	79.22	**BK80-../DSE16XB4**	398	17600	71300
18.5	16	11000	0.95	91.53	**BK80-../DSE16XB4**	398	18300	74200
18.5	14.5	12100	0.87	102.5	**BK80-../DSE16XB4**	398	20500	75000
18.5	36	4900	3.0	40.94	**BK90-../DSE16XB4**	651	21400	73100
18.5	32	5500	2.8	45.80	**BK90-../DSE16XB4**	651	22700	76300

The torques marked (*) are maximum permissible torques for service factor f_B=1.0.

18.5 kW

P_N	50 Hz			i	Typ	m		
	n_2	M_2	f_B					
[kW]	[1/min]	[Nm]	[—]	[:1]		[kg]	[N]	[N]
18.5	27	6500	2.5	54.98	**BK90-../DSE16XB4**	651	24000	81000
18.5	24	7300	2.3	61.52	**BK90-../DSE16XB4**	651	25500	84600
18.5	21.5	8200	2.0	69.27	**BK90-../DSE16XB4**	651	27200	88900
18.5	19	9200	1.85	77.51	**BK90-../DSE16XB4**	651	30300	94400
18.5	16.5	10700	1.55	91.19	**BK90-../DSE16XB4**	651	33300	101000
18.5	14.5	12100	1.4	102.0	**BK90-../DSE16XB4**	651	36600	107000
18.5	12.5	14100	1.2	117.0	**BK90-../DSE16XB4**	651	39200	113000
18.5	11.5	15300	1.1	130.9	**BK90-../DSE16XB4**	651	42700	119400
18.5	9.8	18000	0.93	149.5	**BK90-../DSE16XB4**	651	45600	120000
18.5	8.8	20000	0.84	167.2	**BK90-../DSE16XB4**	651	49400	120000
18.5	8.4	21000	0.88	174.7	**BK90Z-../DSE16XB4**	710	49400	120000

22 kW

P_N	50 Hz			i	Typ	m		
	n_2	M_2	f_B					
[kW]	[1/min]	[Nm]	[—]	[:1]		[kg]	[N]	[N]
22	97	2150	1.4	15.16	**BK70-../DSE18LB4**	329	5600	25800
22	85	2450	1.45	17.24	**BK70-../DSE18LB4**	329	6500	29200
22	67	3100	1.3	21.88	**BK70-../DSE18LB4**	329	6500	30200
22	59	3550	1.2	24.89	**BK70-../DSE18LB4**	329	7000	31500
22	47.5	4400	1.05	30.90	**BK70-../DSE18LB4**	329	7500	33600
22	42	5000	0.95	35.15	**BK70-../DSE18LB4**	329	8000	35000
22	36.5	5700	0.86	40.08	**BK70-../DSE18LB4**	329	8300	36300
22	32.5	6400	0.8	45.59	**BK70-../DSE18LB4**	329	9000	37900
22	102	2050	2.1	14.34	**BK80-../DSE18LB4**	443	7900	36200
22	92	2250	2.1	15.88	**BK80-../DSE18LB4**	443	8400	38600
22	83	2500	2.1	17.79	**BK80-../DSE18LB4**	443	9400	42100
22	76	2750	2.1	19.35	**BK80-../DSE18LB4**	443	9500	44000
22	66	3150	2.2	22.19	**BK80-../DSE18LB4**	443	10500	48500
22	59	3550	2.0	24.85	**BK80-../DSE18LB4**	443	11200	50400
22	48	4350	1.7	30.56	**BK80-../DSE18LB4**	443	11900	53400
22	43	4850	1.6	34.22	**BK80-../DSE18LB4**	443	12600	55400
22	35	6000	1.35	41.78	**BK80-../DSE18LB4**	443	13500	58700
22	31.5	6600	1.3	46.80	**BK80-../DSE18LB4**	443	14300	60900
22	27.5	7600	1.15	53.21	**BK80-../DSE18LB4**	443	14800	63100
22	24.5	8500	1.1	59.60	**BK80-../DSE18LB4**	443	15700	65500
22	21	10000	0.96	70.72	**BK80-../DSE18LB4**	443	16600	68700
22	18.5	11300	0.89	79.22	**BK80-../DSE18LB4**	443	17600	71300
22	48	4350	3.1	30.47	**BK90-../DSE18LB4**	698	19100	65900
22	43	4850	2.9	34.09	**BK90-../DSE18LB4**	698	20300	68800
22	36	5800	2.5	40.94	**BK90-../DSE18LB4**	698	21400	73100
22	32	6500	2.4	45.80	**BK90-../DSE18LB4**	698	22700	76300
22	27	7700	2.1	54.98	**BK90-../DSE18LB4**	698	24000	81000
22	24	8700	1.95	61.52	**BK90-../DSE18LB4**	698	25500	84600
22	21.5	9700	1.75	69.27	**BK90-../DSE18LB4**	698	27200	88900
22	19	11000	1.55	77.51	**BK90-../DSE18LB4**	698	30300	94400
22	16.5	12700	1.3	91.19	**BK90-../DSE18LB4**	698	33300	101000
22	14.5	14400	1.15	102.0	**BK90-../DSE18LB4**	698	36600	107000
22	12.5	16800	1.0	117.0	**BK90-../DSE18LB4**	698	39200	113000
22	11.5	18200	0.92	130.9	**BK90-../DSE18LB4**	698	42700	119400

30 kW

P_N	50 Hz			i	Typ	m		
	n_2	M_2	f_B					
[kW]	[1/min]	[Nm]	[—]	[:1]		[kg]	[N]	[N]
30	400	650	1.1	3.67	**BK50-../DSE18XB4**	263	115	9400
30	280	940	0.86	5.26	**BK50-../DSE18XB4**	263	130	10700

The torques marked (*) are maximum permissible torques for service factor f_B=1.0.

30 kW

P_N	50 Hz			i	**Typ**	m		
	n_2	M_2	f_B					
[kW]	[1/min]	[Nm]	[—]	[:1]		[kg]	[N]	[N]
30	205	1390	1.05	7.29	**BK60-../DSE18XB4**	270	2800	14900
30	135	2100	0.8	10.82	**BK60-../DSE18XB4**	270	3200	17000
30								
30	97	2950	1.05	15.16	**BK70-../DSE18XB4**	347	5600	25800
30	85	3350	1.05	17.24	**BK70-../DSE18XB4**	347	6500	29200
30	67	4250	0.96	21.88	**BK70-../DSE18XB4**	347	6500	30200
30	59	4850	0.88	24.89	**BK70-../DSE18XB4**	347	7000	31500
30								
30	102	2800	1.55	14.34	**BK80-../DSE18XB4**	461	7900	36200
30	92	3100	1.55	15.88	**BK80-../DSE18XB4**	461	8400	38600
30	83	3450	1.5	17.79	**BK80-../DSE18XB4**	461	9400	42100
30	76	3750	1.55	19.35	**BK80-../DSE18XB4**	461	9500	44000
30	66	4300	1.6	22.19	**BK80-../DSE18XB4**	461	10500	48500
30	59	4850	1.45	24.85	**BK80-../DSE18XB4**	461	11200	50400
30	48	5900	1.25	30.56	**BK80-../DSE18XB4**	461	11900	53400
30	43	6600	1.2	34.22	**BK80-../DSE18XB4**	461	12600	55400
30	35	8100	1.0	41.78	**BK80-../DSE18XB4**	461	13500	58700
30	31.5	9000	0.95	46.80	**BK80-../DSE18XB4**	461	14300	60900
30	27.5	10400	0.85	53.21	**BK80-../DSE18XB4**	461	14800	63100
30	24.5	11600	0.8	59.60	**BK80-../DSE18XB4**	461	15700	65500
30	101	2800	3.3	14.49	**BK90-../DSE18XB4**	716	14500	50400
30	91	3100	3.3	16.21	**BK90-../DSE18XB4**	716	15400	52400
30	81	3500	3.3	18.07	**BK90-../DSE18XB4**	716	15600	54400
30	73	3900	3.1	20.21	**BK90-../DSE18XB4**	716	16600	56700
30	66	4300	2.9	22.29	**BK90-../DSE18XB4**	716	16900	59100
30	59	4850	2.6	24.94	**BK90-../DSE18XB4**	716	18000	61700
30	48	5900	2.3	30.47	**BK90-../DSE18XB4**	716	19100	65900
30	43	6600	2.1	34.09	**BK90-../DSE18XB4**	716	20300	68800
30	36	7900	1.85	40.94	**BK90-../DSE18XB4**	716	21400	73100
30	32	8900	1.75	45.80	**BK90-../DSE18XB4**	716	22700	76300
30	27	10600	1.5	54.98	**BK90-../DSE18XB4**	716	24000	81000
30	24	11900	1.4	61.52	**BK90-../DSE18XB4**	716	25500	84600
30	21.5	13300	1.25	69.27	**BK90-../DSE18XB4**	716	27200	88900
30	19	15000	1.1	77.51	**BK90-../DSE18XB4**	716	30300	94400
30	16.5	17300	0.97	91.19	**BK90-../DSE18XB4**	716	33300	101000
30	14.5	19700	0.85	102.0	**BK90-../DSE18XB4**	716	36600	107000

The torques marked (*) are maximum permissible torques for service factor f_B=1.0.

0.03 kW

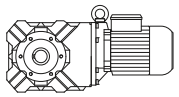

P_N	50 Hz			i	Type	m		
	n_2	M_2	f_B					
[kW]	[1/min]	[Nm]	[—]	[:1]		[kg]	[N]	[N]
0.03	28.5	8.9	9.0	47.78	**BK06-../D04LA4**	7.6	1500	-
0.03	25	10.1	6.7	54.38	**BK06-../D04LA4**	7.6	1600	-
0.03	21.5	11.8	5.4	63.33	**BK06-../D04LA4**	7.6	1700	-
0.03	3.7	62	2.7	373.4	**BK10Z-../D04LA4**	21	7000	-
0.03	3.2	71	2.1	428.8	**BK10Z-../D04LA4**	21	7000	-
0.03	2.5	66	3.3	552.3	**BK10G06-../D04LA4**	25	7000	-
0.03	2.2	77	2.9	635.5	**BK10G06-../D04LA4**	25	7000	-
0.03	1.8	98	2.2	789.7	**BK10G06-../D04LA4**	25	7000	-
0.03	1.5	118	1.85	929.3	**BK10G06-../D04LA4**	25	7000	-
0.03	1.3	139	1.6	1112	**BK10G06-../D04LA4**	25	7000	-
0.03	1.0	184	1.2	1361	**BK10G06-../D04LA4**	25	7000	-
0.03	0.9	205	1.05	1577	**BK10G06-../D04LA4**	25	7000	-
0.03	0.7	220*	1.0	1971	**BK10G06-../D04LA4**	25	7000	-
0.03	0.6	220*	1.0	2261	**BK10G06-../D04LA4**	25	7000	-
0.03	0.55	220*	1.0	2467	**BK10G06-../D04LA4**	25	7000	-
0.03	0.48	220*	1.0	2849	**BK10G06-../D04LA4**	25	7000	-
0.03	0.44	220*	1.0	3107	**BK10G06-../D04LA4**	25	7000	-
0.03	0.39	220*	1.0	3537	**BK10G06-../D04LA4**	25	7000	-
0.03	0.33	220*	1.0	4120	**BK10G06-../D04LA4**	25	7000	-
0.03	1.6	110	3.3	891.2	**BK20G06-../D04LA4**	34	8700	9000
0.03	1.3	138	2.6	1066	**BK20G06-../D04LA4**	34	8700	9000
0.03	1.1	165	2.2	1305	**BK20G06-../D04LA4**	34	8700	9000
0.03	0.95	193	1.85	1424	**BK20G06-../D04LA4**	34	8700	9000
0.03	0.85	220	1.65	1650	**BK20G06-../D04LA4**	34	8700	9000
0.03	0.7	270	1.35	2062	**BK20G06-../D04LA4**	34	8700	9000
0.03	0.6	320	1.15	2366	**BK20G06-../D04LA4**	34	8700	9000
0.03	0.55	350	1.05	2580	**BK20G06-../D04LA4**	34	8700	9000
0.03	0.48	360*	1.0	2831	**BK20G06-../D04LA4**	34	8700	9000
0.03	0.44	360*	1.0	3088	**BK20G06-../D04LA4**	34	8700	9000
0.03	0.39	360*	1.0	3515	**BK20G06-../D04LA4**	34	8700	9000
0.03	0.33	360*	1.0	4094	**BK20G06-../D04LA4**	34	8700	9000
0.03	1.2	150	3.3	1142	**BK30G06-../D04LA4**	40	11200	12000
0.03	1.1	165	3.0	1281	**BK30G06-../D04LA4**	40	11200	12000
0.03	0.85	220	2.2	1620	**BK30G06-../D04LA4**	40	11200	12000
0.03	0.8	235	2.1	1767	**BK30G06-../D04LA4**	40	11200	12000
0.03	0.7	270	1.8	2024	**BK30G06-../D04LA4**	40	11200	12000
0.03	0.55	350	1.4	2533	**BK30G06-../D04LA4**	40	11200	12000
0.03	0.5	380	1.3	2738	**BK30G06-../D04LA4**	40	11200	12000
0.03	0.46	415	1.2	2986	**BK30G06-../D04LA4**	40	11200	12000
0.03	0.4	480	1.0	3399	**BK30G06-../D04LA4**	40	11200	12000
0.03	0.35	490*	1.0	3959	**BK30G06-../D04LA4**	40	11200	12000

0.04 kW

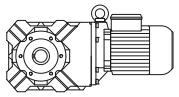

P_N	50 Hz			i	Type	m		
	n_2	M_2	f_B					
[kW]	[1/min]	[Nm]	[—]	[:1]		[kg]	[N]	[N]
0.04	41	8.3	9.6	33.33	**BK06-../D04LA4**	7.6	1320	-
0.04	35.5	9.6	8.3	38.18	**BK06-../D04LA4**	7.6	1380	-
0.04	28.5	11.9	6.7	47.78	**BK06-../D04LA4**	7.6	1500	-
0.04	25	13.5	5.0	54.38	**BK06-../D04LA4**	7.6	1600	-
0.04	21.5	15.8	4.0	63.33	**BK06-../D04LA4**	7.6	1700	-
0.04	4.5	68	2.7	302.4	**BK10Z-../D04LA4**	21	7000	-
0.04	3.7	83	2.0	373.4	**BK10Z-../D04LA4**	21	7000	-
0.04	3.2	95	1.55	428.8	**BK10Z-../D04LA4**	21	7000	-
0.04	3.0	78	2.8	459.2	**BK10G06-../D04LA4**	25	7000	-
0.04	2.7	88	2.5	501.4	**BK10G06-../D04LA4**	25	7000	-
0.04	2.5	96	2.3	552.3	**BK10G06-../D04LA4**	25	7000	-
0.04	2.2	112	1.95	635.5	**BK10G06-../D04LA4**	25	7000	-
0.04	1.8	140	1.55	789.7	**BK10G06-../D04LA4**	25	7000	-
0.04	1.5	167	1.3	929.3	**BK10G06-../D04LA4**	25	7000	-
0.04	1.3	195	1.15	1112	**BK10G06-../D04LA4**	25	7000	-

The torques marked (*) are maximum permissible torques for service factor f_B=1,0.

0.04 kW

P_N	50 Hz			i	Type	m		
	n_2	M_2	f_B					
[kW]	[1/min]	[Nm]	[—]	[:1]		[kg]	[N]	[N]
0.04	1.0	255	0.86	1361	**BK10G06-../D04LA4**	25	7000	-
0.04	2.2	110	3.3	630.0	**BK20G06-../D04LA4**	34	8700	9000
0.04	1.8	138	2.6	757.0	**BK20G06-../D04LA4**	34	8700	9000
0.04	1.6	156	2.3	891.2	**BK20G06-../D04LA4**	34	8700	9000
0.04	1.3	195	1.85	1066	**BK20G06-../D04LA4**	34	8700	9000
0.04	1.1	230	1.55	1305	**BK20G06-../D04LA4**	34	8700	9000
0.04	0.95	270	1.35	1424	**BK20G06-../D04LA4**	34	8700	9000
0.04	0.85	305	1.2	1650	**BK20G06-../D04LA4**	34	8700	9000
0.04	1.7	147	3.3	810.9	**BK30G06-../D04LA4**	40	11200	12000
0.04	1.5	167	2.9	954.1	**BK30G06-../D04LA4**	40	11200	12000
0.04	1.2	210	2.3	1142	**BK30G06-../D04LA4**	40	11200	12000
0.04	1.1	230	2.1	1281	**BK30G06-../D04LA4**	40	11200	12000
0.04	0.85	305	1.6	1620	**BK30G06-../D04LA4**	40	11200	12000
0.04	0.8	325	1.5	1767	**BK30G06-../D04LA4**	40	11200	12000
0.04	0.7	375	1.3	2024	**BK30G06-../D04LA4**	40	11200	12000
0.04	0.55	480	1.0	2533	**BK30G06-../D04LA4**	40	11200	12000

0.06 kW

P_N	50 Hz			i	Type	m		
	n_2	M_2	f_B					
[kW]	[1/min]	[Nm]	[—]	[:1]		[kg]	[N]	[N]
0.06	63	8.1	9.9	21.54	**BK06-../D04LA4**	7.6	1150	-
0.06	52	9.9	8.1	26.36	**BK06-../D04LA4**	7.6	1230	-
0.06	41	12.5	6.4	33.33	**BK06-../D04LA4**	7.6	1320	-
0.06	35.5	14.5	5.5	38.18	**BK06-../D04LA4**	7.6	1380	-
0.06	28.5	17.8	4.5	47.78	**BK06-../D04LA4**	7.6	1500	-
0.06	25	20	3.4	54.38	**BK06-../D04LA4**	7.6	1600	-
0.06	21.5	23.5	2.7	63.33	**BK06-../D04LA4**	7.6	1700	-
0.06	11.5	42	3.3	120.3	**BK10Z-../D06LA4**	24	7000	-
0.06	9.5	50	3.3	143.2	**BK10Z-../D06LA4**	24	7000	-
0.06	6.6	71	2.8	204.7	**BK10Z-../D06LA4**	24	7000	-
0.06	5.3	88	2.3	257.9	**BK10Z-../D06LA4**	24	7000	-
0.06	4.5	103	1.8	302.4	**BK10Z-../D06LA4**	24	7000	-
0.06	3.7	125	1.3	373.4	**BK10Z-../D06LA4**	24	7000	-
0.06	3.2	143	1.05	428.8	**BK10Z-../D06LA4**	24	7000	-
0.06	3.0	129	1.7	459.2	**BK10G06-../D06LA4**	28	7000	-
0.06	2.7	144	1.55	501.4	**BK10G06-../D06LA4**	28	7000	-
0.06	2.5	157	1.4	552.3	**BK10G06-../D06LA4**	28	7000	-
0.06	2.2	180	1.2	635.5	**BK10G06-../D06LA4**	28	7000	-
0.06	1.8	220	1.0	789.7	**BK10G06-../D06LA4**	28	7000	-
0.06	1.5	265	0.83	929.3	**BK10G06-../D06LA4**	28	7000	-
0.06	4.6	100	3.1	298.2	**BK20Z-../D06LA4**	34	8700	9000
0.06	3.7	123	2.4	367.7	**BK20Z-../D06LA4**	34	8700	9000
0.06	3.2	120	3.0	429.7	**BK20G06-../D06LA4**	38	8700	9000
0.06	2.9	133	2.7	480.4	**BK20G06-../D06LA4**	38	8700	9000
0.06	2.6	149	2.4	524.5	**BK20G06-../D06LA4**	38	8700	9000
0.06	2.2	178	2.0	630.0	**BK20G06-../D06LA4**	38	8700	9000
0.06	1.8	220	1.65	757.0	**BK20G06-../D06LA4**	38	8700	9000
0.06	1.6	245	1.45	891.2	**BK20G06-../D06LA4**	38	8700	9000
0.06	1.3	305	1.2	1066	**BK20G06-../D06LA4**	38	8700	9000
0.06	1.1	360	1.0	1305	**BK20G06-../D06LA4**	38	8700	9000
0.06	3.6	128	3.1	380.7	**BK30Z-../D06LA4**	41	11200	12000
0.06	3.1	147	2.6	441.3	**BK30Z-../D06LA4**	41	11200	12000
0.06	2.4	163	3.0	567.0	**BK30G06-../D06LA4**	44	11200	12000
0.06	2.1	188	2.6	652.5	**BK30G06-../D06LA4**	44	11200	12000
0.06	1.9	210	2.3	743.0	**BK30G06-../D06LA4**	44	11200	12000
0.06	1.7	235	2.1	810.9	**BK30G06-../D06LA4**	44	11200	12000
0.06	1.5	265	1.85	954.1	**BK30G06-../D06LA4**	44	11200	12000
0.06	1.2	330	1.5	1142	**BK30G06-../D06LA4**	44	11200	12000
0.06	1.1	360	1.35	1281	**BK30G06-../D06LA4**	44	11200	12000

The torques marked (*) are maximum permissible torques for service factor f_B=1,0.

0.06 kW

P_N	50 Hz			i	Type	m		
	n_2	M_2	f_B					
[kW]	[1/min]	[Nm]	[—]	[:1]		[kg]	[N]	[N]
0.06	0.85	475	1.05	1620	**BK30G06-../D06LA4**	44	11200	12000
0.06	1.2	290	2.9	1189	**BK40G10-../D06LA4**	68	11700	17000
0.06	0.95	380	2.2	1428	**BK40G10-../D06LA4**	68	11700	17000
0.06	0.8	465	1.85	1798	**BK40G10-../D06LA4**	68	11700	17000
0.06	0.65	580	1.45	2108	**BK40G10-../D06LA4**	68	11700	17000
0.06	0.6	640	1.35	2350	**BK40G10-../D06LA4**	68	11700	17000
0.06	0.55	700	1.2	2604	**BK40G10-../D06LA4**	68	11700	17000
0.06	1.0	370	3.1	1398	**BK50G10-../D06LA4**	96	14100	111000
0.06	0.9	415	2.8	1549	**BK50G10-../D06LA4**	96	14100	111000
0.06	0.75	510	2.3	1816	**BK50G10-../D06LA4**	96	14100	111000
0.06	0.7	550	2.1	2024	**BK50G10-../D06LA4**	96	14100	111000
0.06	0.6	630	1.85	2450	**BK50G10-../D06LA4**	96	14100	111000
0.06	0.5	760	1.5	2730	**BK50G10-../D06LA4**	96	14100	111000
0.06	0.45	850	1.35	3025	**BK50G10-../D06LA4**	96	14100	111000
0.06	0.39	960	1.2	3492	**BK50G10-../D06LA4**	96	14100	111000
0.06	0.35	1080	1.05	3870	**BK50G10-../D06LA4**	96	14100	111000
0.06	0.39	920	2.7	3533	**BK60G20-../D06LA4**	123	16600	34000
0.06	0.32	1240	2.0	4239	**BK60G20-../D06LA4**	123	16600	34000
0.06	0.27	1570	1.6	5072	**BK60G20-../D06LA4**	123	16600	34000
0.06	0.24	1830	1.35	5721	**BK60G20-../D06LA4**	123	16600	34000
0.06	0.21	2150	1.15	6565	**BK60G20-../D06LA4**	123	16600	34000
0.06	0.19	2450	1.0	7291	**BK60G20-../D06LA4**	123	16600	34000
0.06	0.21	2000	2.9	6504	**BK70G20-../D06LA4**	201	24100	50000
0.06	0.17	2650	2.2	8149	**BK70G20-../D06LA4**	201	24100	50000
0.06	0.15	3100	1.85	9351	**BK70G20-../D06LA4**	201	24100	50000

0.09 kW

P_N	50 Hz			i	Type	m		
	n_2	M_2	f_B					
[kW]	[1/min]	[Nm]	[—]	[:1]		[kg]	[N]	[N]
0.09	89	8.7	9.2	15.29	**BK06-../D04LA4**	7.6	1020	-
0.09	75	10.3	7.8	18.00	**BK06-../D04LA4**	7.6	1080	-
0.09	63	12.2	6.6	21.54	**BK06-../D04LA4**	7.6	1150	-
0.09	52	14.8	5.4	26.36	**BK06-../D04LA4**	7.6	1230	-
0.09	41	18.8	4.3	33.33	**BK06-../D04LA4**	7.6	1320	-
0.09	35.5	21.5	3.7	38.18	**BK06-../D04LA4**	7.6	1380	-
0.09	28.5	26.5	3.0	47.78	**BK06-../D04LA4**	7.6	1500	-
0.09	25	30.5	2.2	54.38	**BK06-../D04LA4**	7.6	1600	-
0.09	21.5	35.5	1.8	63.33	**BK06-../D04LA4**	7.6	1700	-
0.09	13.5	54	2.9	102.5	**BK10-../D06LA4**	23	7000	-
0.09	11.5	63	2.2	120.3	**BK10Z-../D06LA4**	24	7000	-
0.09	9.5	75	2.2	143.2	**BK10Z-../D06LA4**	24	7000	-
0.09	8.0	89	2.2	170.6	**BK10Z-../D06LA4**	24	7000	-
0.09	6.6	106	1.9	204.7	**BK10Z-../D06LA4**	24	7000	-
0.09	5.3	132	1.5	257.9	**BK10Z-../D06LA4**	24	7000	-
0.09	4.5	154	1.2	302.4	**BK10Z-../D06LA4**	24	7000	-
0.09	3.7	188	0.88	373.4	**BK10Z-../D06LA4**	24	7000	-
0.09	3.3	186	1.2	410.8	**BK10G06-../D06LA4**	28	7000	-
0.09	3.0	205	1.05	459.2	**BK10G06-../D06LA4**	28	7000	-
0.09	2.7	225	0.98	501.4	**BK10G06-../D06LA4**	28	7000	-
0.09	2.5	245	0.9	552.3	**BK10G06-../D06LA4**	28	7000	-
0.09	6.6	106	3.1	207.5	**BK20Z-../D06LA4**	34	8700	9000
0.09	5.2	135	2.4	259.9	**BK20Z-../D06LA4**	34	8700	9000
0.09	4.6	151	2.1	298.2	**BK20Z-../D06LA4**	34	8700	9000
0.09	3.7	185	1.6	367.7	**BK20Z-../D06LA4**	34	8700	9000
0.09	3.2	192	1.9	429.7	**BK20G06-../D06LA4**	38	8700	9000
0.09	2.9	210	1.7	480.4	**BK20G06-../D06LA4**	38	8700	9000
0.09	2.6	235	1.55	524.5	**BK20G06-../D06LA4**	38	8700	9000
0.09	2.2	280	1.3	630.0	**BK20G06-../D06LA4**	38	8700	9000

The torques marked (*) are maximum permissible torques for service factor f_B=1,0.

0.09 kW

P_N	50 Hz			i	Type	m		
	n_2	M_2	f_B					
[kW]	[1/min]	[Nm]	[—]	[:1]		[kg]	[N]	[N]
0.09	1.8	345	1.05	757.0	**BK20G06-../D06LA4**	38	8700	9000
0.09	1.6	385	0.94	891.2	**BK20G06-../D06LA4**	38	8700	9000
0.09	4.4	160	2.4	308.3	**BK30Z-../D06LA4**	41	11200	12000
0.09	3.6	193	2.1	380.7	**BK30Z-../D06LA4**	41	11200	12000
0.09	3.1	220	1.75	441.3	**BK30Z-../D06LA4**	41	11200	12000
0.09	2.9	210	2.3	471.5	**BK30G06-../D06LA4**	44	11200	12000
0.09	2.4	255	1.9	567.0	**BK30G06-../D06LA4**	44	11200	12000
0.09	2.1	295	1.65	652.5	**BK30G06-../D06LA4**	44	11200	12000
0.09	1.9	325	1.5	743.0	**BK30G06-../D06LA4**	44	11200	12000
0.09	1.7	365	1.35	810.9	**BK30G06-../D06LA4**	44	11200	12000
0.09	1.5	410	1.2	954.1	**BK30G06-../D06LA4**	44	11200	12000
0.09	1.2	510	0.96	1142	**BK30G06-../D06LA4**	44	11200	12000
0.09	1.1	560	0.88	1281	**BK30G06-../D06LA4**	44	11200	12000
0.09	3.9	178	3.3	348.7	**BK40Z-../D06LA4**	64	11700	17000
0.09	3.2	210	2.7	430.0	**BK40Z-../D06LA4**	64	11700	17000
0.09	1.8	295	2.9	756.7	**BK40G10-../D06LA4**	68	11700	17000
0.09	1.7	320	2.7	838.4	**BK40G10-../D06LA4**	68	11700	17000
0.09	1.4	400	2.1	998.3	**BK40G10-../D06LA4**	68	11700	17000
0.09	1.2	475	1.8	1189	**BK40G10-../D06LA4**	68	11700	17000
0.09	0.95	610	1.4	1428	**BK40G10-../D06LA4**	68	11700	17000
0.09	0.8	730	1.15	1798	**BK40G10-../D06LA4**	68	11700	17000
0.09	1.6	350	3.3	859.8	**BK50G10-../D06LA4**	96	14100	111000
0.09	1.4	410	2.8	1024	**BK50G10-../D06LA4**	96	14100	111000
0.09	1.1	530	2.2	1230	**BK50G10-../D06LA4**	96	14100	111000
0.09	1.0	590	1.95	1398	**BK50G10-../D06LA4**	96	14100	111000
0.09	0.9	660	1.75	1549	**BK50G10-../D06LA4**	96	14100	111000
0.09	0.75	790	1.45	1816	**BK50G10-../D06LA4**	96	14100	111000
0.09	0.7	850	1.35	2024	**BK50G10-../D06LA4**	96	14100	111000
0.09	0.6	980	1.15	2450	**BK50G10-../D06LA4**	96	14100	111000
0.09	0.7	750	3.3	2010	**BK60G20-../D06LA4**	123	16600	34000
0.09	0.6	930	2.7	2371	**BK60G20-../D06LA4**	123	16600	34000
0.09	0.5	1180	2.1	2733	**BK60G20-../D06LA4**	123	16600	34000
0.09	0.45	1360	1.85	3036	**BK60G20-../D06LA4**	123	16600	34000
0.09	0.39	1650	1.5	3533	**BK60G20-../D06LA4**	123	16600	34000
0.09	0.32	2100	1.2	4239	**BK60G20-../D06LA4**	123	16600	34000
0.09	0.35	1750	3.3	3894	**BK70G20-../D06LA4**	201	24100	50000
0.09	0.3	2150	2.7	4531	**BK70G20-../D06LA4**	201	24100	50000
0.09	0.25	2700	2.1	5436	**BK70G20-../D06LA4**	201	24100	50000
0.09	0.21	3350	1.7	6504	**BK70G20-../D06LA4**	201	24100	50000
0.09	0.17	4350	1.3	8149	**BK70G20-../D06LA4**	201	24100	50000
0.09	0.15	5000	1.15	9351	**BK70G20-../D06LA4**	201	24100	50000

0.11 kW

P_N	50 Hz			i	Type	m		
	n_2	M_2	f_B					
[kW]	[1/min]	[Nm]	[—]	[:1]		[kg]	[N]	[N]
0.11	116	8.3	9.6	11.67	**BK06-../D04LA4**	7.6	930	-
0.11	89	10.7	7.5	15.29	**BK06-../D04LA4**	7.6	1020	-
0.11	75	12.6	6.3	18.00	**BK06-../D04LA4**	7.6	1080	-
0.11	63	15	5.3	21.54	**BK06-../D04LA4**	7.6	1150	-
0.11	52	18.1	4.4	26.36	**BK06-../D04LA4**	7.6	1230	-
0.11	41	23	3.5	33.33	**BK06-../D04LA4**	7.6	1320	-
0.11	35.5	26.5	3.0	38.18	**BK06-../D04LA4**	7.6	1380	-
0.11	28.5	32.5	2.5	47.78	**BK06-../D04LA4**	7.6	1500	-
0.11	25	37	1.85	54.38	**BK06-../D04LA4**	7.6	1600	-
0.11	21.5	43	1.5	63.33	**BK06-../D04LA4**	7.6	1700	-
0.11	11.5	77	1.8	120.3	**BK10Z-../D04LA4**	21	7000	-
0.11	9.5	92	1.75	143.2	**BK10Z-../D04LA4**	21	7000	-
0.11	8.0	108	1.85	170.6	**BK10Z-../D04LA4**	21	7000	-

The torques marked (*) are maximum permissible torques for service factor f_B=1,0.

0.11 kW

P_N	50 Hz			i	Type	m		
	n_2	M_2	f_B					
[kW]	[1/min]	[Nm]	[—]	[:1]		[kg]	[N]	[N]
0.11	6.6	130	1.55	204.7	**BK10Z-../D04LA4**	21	7000	-
0.11	5.3	162	1.25	257.9	**BK10Z-../D04LA4**	21	7000	-
0.11	4.5	189	0.97	302.4	**BK10Z-../D04LA4**	21	7000	-
0.11	4.0	191	1.15	343.2	**BK10G06-../D04LA4**	25	7000	-
0.11	3.3	230	0.96	410.8	**BK10G06-../D04LA4**	25	7000	-
0.11	3.0	255	0.86	459.2	**BK10G06-../D04LA4**	25	7000	-
0.11	2.7	220*	1.0	501.4	**BK10G06-../D04LA4**	25	7000	-
0.11	2.5	220*	1.0	552.3	**BK10G06-../D04LA4**	25	7000	-
0.11	2.2	220*	1.0	635.5	**BK10G06-../D04LA4**	25	7000	-
0.11	1.8	220*	1.0	789.7	**BK10G06-../D04LA4**	25	7000	-
0.11	1.5	220*	1.0	929.3	**BK10G06-../D04LA4**	25	7000	-
0.11	1.3	220*	1.0	1112	**BK10G06-../D04LA4**	25	7000	-
0.11	1.0	220*	1.0	1361	**BK10G06-../D04LA4**	25	7000	-
0.11	0.9	220*	1.0	1577	**BK10G06-../D04LA4**	25	7000	-
0.11	0.7	220*	1.0	1971	**BK10G06-../D04LA4**	25	7000	-
0.11	0.6	220*	1.0	2261	**BK10G06-../D04LA4**	25	7000	-
0.11	0.55	220*	1.0	2467	**BK10G06-../D04LA4**	25	7000	-
0.11	0.48	220*	1.0	2849	**BK10G06-../D04LA4**	25	7000	-
0.11	0.44	220*	1.0	3107	**BK10G06-../D04LA4**	25	7000	-
0.11	0.39	220*	1.0	3537	**BK10G06-../D04LA4**	25	7000	-
0.11	0.33	220*	1.0	4120	**BK10G06-../D04LA4**	25	7000	-
0.11	7.8	111	3.0	173.4	**BK20Z-../D04LA4**	31	8700	9000
0.11	6.6	130	2.5	207.5	**BK20Z-../D04LA4**	31	8700	9000
0.11	5.2	165	2.0	259.9	**BK20Z-../D04LA4**	31	8700	9000
0.11	4.6	184	1.7	298.2	**BK20Z-../D04LA4**	31	8700	9000
0.11	3.7	225	1.3	367.7	**BK20Z-../D04LA4**	31	8700	9000
0.11	3.2	235	1.55	429.7	**BK20G06-../D04LA4**	34	8700	9000
0.11	2.9	260	1.4	480.4	**BK20G06-../D04LA4**	34	8700	9000
0.11	2.6	295	1.2	524.5	**BK20G06-../D04LA4**	34	8700	9000
0.11	2.2	345	1.05	630.0	**BK20G06-../D04LA4**	34	8700	9000
0.11	1.8	425	0.85	757.0	**BK20G06-../D04LA4**	34	8700	9000
0.11	1.6	360*	1.0	891.2	**BK20G06-../D04LA4**	34	8700	9000
0.11	1.3	360*	1.0	1066	**BK20G06-../D04LA4**	34	8700	9000
0.11	1.1	360*	1.0	1305	**BK20G06-../D04LA4**	34	8700	9000
0.11	0.95	360*	1.0	1424	**BK20G06-../D04LA4**	34	8700	9000
0.11	0.85	360*	1.0	1650	**BK20G06-../D04LA4**	34	8700	9000
0.11	0.7	360*	1.0	2062	**BK20G06-../D04LA4**	34	8700	9000
0.11	0.6	360*	1.0	2366	**BK20G06-../D04LA4**	34	8700	9000
0.11	0.55	360*	1.0	2580	**BK20G06-../D04LA4**	34	8700	9000
0.11	0.48	360*	1.0	2831	**BK20G06-../D04LA4**	34	8700	9000
0.11	0.44	360*	1.0	3088	**BK20G06-../D04LA4**	34	8700	9000
0.11	0.39	360*	1.0	3515	**BK20G06-../D04LA4**	34	8700	9000
0.11	0.33	360*	1.0	4094	**BK20G06-../D04LA4**	34	8700	9000
0.11	2.9	260	1.9	471.5	**BK30G06-../D04LA4**	40	11200	12000
0.11	2.4	320	1.55	567.0	**BK30G06-../D04LA4**	40	11200	12000
0.11	2.1	365	1.35	652.5	**BK30G06-../D04LA4**	40	11200	12000
0.11	1.9	405	1.2	743.0	**BK30G06-../D04LA4**	40	11200	12000
0.11	1.7	450	1.1	810.9	**BK30G06-../D04LA4**	40	11200	12000
0.11	1.5	510	0.96	954.1	**BK30G06-../D04LA4**	40	11200	12000
0.11	1.2	490*	1.0	1142	**BK30G06-../D04LA4**	40	11200	12000
0.11	1.1	490*	1.0	1281	**BK30G06-../D04LA4**	40	11200	12000
0.11	0.85	490*	1.0	1620	**BK30G06-../D04LA4**	40	11200	12000
0.11	0.8	490*	1.0	1767	**BK30G06-../D04LA4**	40	11200	12000
0.11	0.7	490*	1.0	2024	**BK30G06-../D04LA4**	40	11200	12000
0.11	0.55	490*	1.0	2533	**BK30G06-../D04LA4**	40	11200	12000
0.11	0.5	490*	1.0	2738	**BK30G06-../D04LA4**	40	11200	12000
0.11	0.46	490*	1.0	2986	**BK30G06-../D04LA4**	40	11200	12000
0.11	0.4	490*	1.0	3399	**BK30G06-../D04LA4**	40	11200	12000
0.11	0.35	490*	1.0	3959	**BK30G06-../D04LA4**	40	11200	12000

The torques marked (*) are maximum permissible torques for service factor f_B=1,0.

0.12 kW

P_N	50 Hz			i	Type	m		
	n_2	M_2	f_B					
[kW]	[1/min]	[Nm]	[—]	[:1]		[kg]	[N]	[N]
0.12	120	8.7	9.2	11.67	**BK06-../DHE05LA4**	9.5	930	-
0.12	91	11.4	7.0	15.29	**BK06-../DHE05LA4**	9.5	1020	-
0.12	78	13.2	6.1	18.00	**BK06-../DHE05LA4**	9.5	1080	-
0.12	65	15.8	5.1	21.54	**BK06-../DHE05LA4**	9.5	1150	-
0.12	53	19.4	4.1	26.36	**BK06-../DHE05LA4**	9.5	1230	-
0.12	42	24.5	3.3	33.33	**BK06-../DHE05LA4**	9.5	1320	-
0.12	36.5	28	2.9	38.18	**BK06-../DHE05LA4**	9.5	1380	-
0.12	29.5	34.5	2.3	47.78	**BK06-../DHE05LA4**	9.5	1500	-
0.12	26	39	1.75	54.38	**BK06-../DHE05LA4**	9.5	1600	-
0.12	22	46	1.4	63.33	**BK06-../DHE05LA4**	9.5	1700	-
0.12	16	62	2.9	89.30	**BK10-../DHE06LA4**	23	7000	-
0.12	14	69	2.3	102.5	**BK10-../DHE06LA4**	23	7000	-
0.12	12	81	1.7	120.3	**BK10Z-../DHE06LA4**	24	7000	-
0.12	9.7	99	1.65	143.2	**BK10Z-../DHE06LA4**	24	7000	-
0.12	8.2	115	1.75	170.6	**BK10Z-../DHE06LA4**	24	7000	-
0.12	6.8	138	1.45	204.7	**BK10Z-../DHE06LA4**	24	7000	-
0.12	5.4	174	1.15	257.9	**BK10Z-../DHE06LA4**	24	7000	-
0.12	4.6	200	0.92	302.4	**BK10Z-../DHE06LA4**	24	7000	-
0.12	4.1	205	1.05	343.2	**BK10G06-../DHE06LA4**	28	7000	-
0.12	3.4	245	0.9	410.8	**BK10G06-../DHE06LA4**	28	7000	-
0.12	3.1	270	0.81	459.2	**BK10G06-../DHE06LA4**	28	7000	-
0.12	2.8	220*	1.0	501.4	**BK10G06-../DHE06LA4**	28	7000	-
0.12	2.6	220*	1.0	552.3	**BK10G06-../DHE06LA4**	28	7000	-
0.12	2.2	220*	1.0	635.5	**BK10G06-../DHE06LA4**	28	7000	-
0.12	1.8	220*	1.0	789.7	**BK10G06-../DHE06LA4**	28	7000	-
0.12	1.5	220*	1.0	929.3	**BK10G06-../DHE06LA4**	28	7000	-
0.12	1.3	220*	1.0	1112	**BK10G06-../DHE06LA4**	28	7000	-
0.12	1.1	220*	1.0	1361	**BK10G06-../DHE06LA4**	28	7000	-
0.12	0.9	220*	1.0	1577	**BK10G06-../DHE06LA4**	28	7000	-
0.12	0.75	220*	1.0	1971	**BK10G06-../DHE06LA4**	28	7000	-
0.12	0.65	220*	1.0	2261	**BK10G06-../DHE06LA4**	28	7000	-
0.12	0.6	220*	1.0	2467	**BK10G06-../DHE06LA4**	28	7000	-
0.12	0.49	220*	1.0	2849	**BK10G06-../DHE06LA4**	28	7000	-
0.12	0.45	220*	1.0	3107	**BK10G06-../DHE06LA4**	28	7000	-
0.12	0.4	220*	1.0	3537	**BK10G06-../DHE06LA4**	28	7000	-
0.12	0.34	220*	1.0	4120	**BK10G06-../DHE06LA4**	28	7000	-
0.12	9.6	100	3.3	144.5	**BK20Z-../DHE06LA4**	34	8700	9000
0.12	8.0	118	2.8	173.4	**BK20Z-../DHE06LA4**	34	8700	9000
0.12	6.7	140	2.4	207.5	**BK20Z-../DHE06LA4**	34	8700	9000
0.12	5.4	174	1.9	259.9	**BK20Z-../DHE06LA4**	34	8700	9000
0.12	4.7	197	1.6	298.2	**BK20Z-../DHE06LA4**	34	8700	9000
0.12	3.8	240	1.2	367.7	**BK20Z-../DHE06LA4**	34	8700	9000
0.12	3.3	255	1.4	429.7	**BK20G06-../DHE06LA4**	38	8700	9000
0.12	2.9	290	1.25	480.4	**BK20G06-../DHE06LA4**	38	8700	9000
0.12	2.7	310	1.15	524.5	**BK20G06-../DHE06LA4**	38	8700	9000
0.12	2.2	380	0.95	630.0	**BK20G06-../DHE06LA4**	38	8700	9000
0.12	1.9	445	0.81	757.0	**BK20G06-../DHE06LA4**	38	8700	9000
0.12	1.6	360*	1.0	891.2	**BK20G06-../DHE06LA4**	38	8700	9000
0.12	1.3	360*	1.0	1066	**BK20G06-../DHE06LA4**	38	8700	9000
0.12	1.1	360*	1.0	1305	**BK20G06-../DHE06LA4**	38	8700	9000
0.12	1.0	360*	1.0	1424	**BK20G06-../DHE06LA4**	38	8700	9000
0.12	0.85	360*	1.0	1650	**BK20G06-../DHE06LA4**	38	8700	9000
0.12	0.7	360*	1.0	2062	**BK20G06-../DHE06LA4**	38	8700	9000
0.12	0.6	360*	1.0	2366	**BK20G06-../DHE06LA4**	38	8700	9000
0.12	0.55	360*	1.0	2580	**BK20G06-../DHE06LA4**	38	8700	9000
0.12	0.49	360*	1.0	2831	**BK20G06-../DHE06LA4**	38	8700	9000
0.12	0.45	360*	1.0	3088	**BK20G06-../DHE06LA4**	38	8700	9000
0.12	0.4	360*	1.0	3515	**BK20G06-../DHE06LA4**	38	8700	9000
0.12	0.34	360*	1.0	4094	**BK20G06-../DHE06LA4**	38	8700	9000
0.12	6.4	146	3.1	216.5	**BK30Z-../DHE06LA4**	41	11200	12000
0.12	5.5	170	2.6	255.3	**BK30Z-../DHE06LA4**	41	11200	12000
0.12	4.5	205	1.9	308.3	**BK30Z-../DHE06LA4**	41	11200	12000
0.12	3.7	250	1.6	380.7	**BK30Z-../DHE06LA4**	41	11200	12000
0.12	3.2	285	1.35	441.3	**BK30Z-../DHE06LA4**	41	11200	12000
0.12	3.0	280	1.75	471.5	**BK30G06-../DHE06LA4**	44	11200	12000
0.12	2.5	335	1.45	567.0	**BK30G06-../DHE06LA4**	44	11200	12000
0.12	2.2	380	1.3	652.5	**BK30G06-../DHE06LA4**	44	11200	12000

The torques marked (*) are maximum permissible torques for service factor f_B=1,0.

0.12 kW

P_N	50 Hz			i	Type	m		
	n_2	M_2	f_B					
[kW]	[1/min]	[Nm]	[—]	[:1]		[kg]	[N]	[N]
0.12	1.9	445	1.1	743.0	**BK30G06-../DHE06LA4**	44	11200	12000
0.12	1.8	470	1.05	810.9	**BK30G06-../DHE06LA4**	44	11200	12000
0.12	1.5	560	0.88	954.1	**BK30G06-../DHE06LA4**	44	11200	12000
0.12	1.3	490*	1.0	1142	**BK30G06-../DHE06LA4**	44	11200	12000
0.12	1.1	490*	1.0	1281	**BK30G06-../DHE06LA4**	44	11200	12000
0.12	0.9	490*	1.0	1620	**BK30G06-../DHE06LA4**	44	11200	12000
0.12	0.8	490*	1.0	1767	**BK30G06-../DHE06LA4**	44	11200	12000
0.12	0.7	490*	1.0	2024	**BK30G06-../DHE06LA4**	44	11200	12000
0.12	0.55	490*	1.0	2738	**BK30G06-../DHE06LA4**	44	11200	12000
0.12	0.47	490*	1.0	2986	**BK30G06-../DHE06LA4**	44	11200	12000
0.12	0.41	490*	1.0	3399	**BK30G06-../DHE06LA4**	44	11200	12000
0.12	0.35	490*	1.0	3959	**BK30G06-../DHE06LA4**	44	11200	12000
0.12	4.0	230	2.5	348.7	**BK40Z-../DHE06LA4**	64	11700	17000
0.12	3.3	275	2.1	430.0	**BK40Z-../DHE06LA4**	64	11700	17000
0.12	2.6	275	3.1	540.0	**BK40G10-../DHE06LA4**	68	11700	17000
0.12	2.1	350	2.4	660.2	**BK40G10-../DHE06LA4**	68	11700	17000
0.12	1.9	395	2.2	756.7	**BK40G10-../DHE06LA4**	68	11700	17000
0.12	1.7	450	1.9	838.4	**BK40G10-../DHE06LA4**	68	11700	17000
0.12	1.4	550	1.55	998.3	**BK40G10-../DHE06LA4**	68	11700	17000
0.12	1.2	650	1.3	1189	**BK40G10-../DHE06LA4**	68	11700	17000
0.12	1.0	790	1.1	1428	**BK40G10-../DHE06LA4**	68	11700	17000
0.12	0.8	850*	1.0	1798	**BK40G10-../DHE06LA4**	68	11700	17000
0.12	0.7	850*	1.0	2108	**BK40G10-../DHE06LA4**	68	11700	17000
0.12	0.6	850*	1.0	2350	**BK40G10-../DHE06LA4**	68	11700	17000
0.12	0.55	850*	1.0	2604	**BK40G10-../DHE06LA4**	68	11700	17000
0.12	0.46	850*	1.0	3077	**BK40G10-../DHE06LA4**	68	11700	17000
0.12	0.41	850*	1.0	3429	**BK40G10-../DHE06LA4**	68	11700	17000
0.12	0.37	850*	1.0	3800	**BK40G10-../DHE06LA4**	68	11700	17000
0.12	0.32	850*	1.0	4363	**BK40G10-../DHE06LA4**	68	11700	17000
0.12	3.4	265	3.2	414.8	**BK50Z-../DHE06LA4**	92	14100	26000
0.12	2.2	345	3.3	651.7	**BK50G10-../DHE06LA4**	96	14100	111000
0.12	2.0	385	3.0	722.2	**BK50G10-../DHE06LA4**	96	14100	111000
0.12	1.7	460	2.5	859.8	**BK50G10-../DHE06LA4**	96	14100	111000
0.12	1.4	560	2.1	1024	**BK50G10-../DHE06LA4**	96	14100	111000
0.12	1.2	670	1.7	1230	**BK50G10-../DHE06LA4**	96	14100	111000
0.12	1.0	800	1.45	1398	**BK50G10-../DHE06LA4**	96	14100	111000
0.12	0.9	890	1.3	1549	**BK50G10-../DHE06LA4**	96	14100	111000
0.12	0.8	1010	1.15	1816	**BK50G10-../DHE06LA4**	96	14100	111000
0.12	0.7	1150*	1.0	2024	**BK50G10-../DHE06LA4**	96	14100	111000
0.12	0.6	1150*	1.0	2450	**BK50G10-../DHE06LA4**	96	14100	111000
0.12	0.55	1150*	1.0	2730	**BK50G10-../DHE06LA4**	96	14100	111000
0.12	0.46	1150*	1.0	3025	**BK50G10-../DHE06LA4**	96	14100	111000
0.12	0.4	1150*	1.0	3492	**BK50G10-../DHE06LA4**	96	14100	111000
0.12	0.36	1150*	1.0	3870	**BK50G10-../DHE06LA4**	96	14100	111000
0.12	0.32	1150*	1.0	4443	**BK50G10-../DHE06LA4**	96	14100	111000
0.12	0.9	860	2.9	1618	**BK60G20-../DHE06LA4**	123	16600	34000
0.12	0.8	970	2.6	1810	**BK60G20-../DHE06LA4**	123	16600	34000
0.12	0.7	1160	2.2	2010	**BK60G20-../DHE06LA4**	123	16600	34000
0.12	0.6	1400	1.8	2371	**BK60G20-../DHE06LA4**	123	16600	34000
0.12	0.55	1540	1.6	2733	**BK60G20-../DHE06LA4**	123	16600	34000
0.12	0.46	1940	1.3	3036	**BK60G20-../DHE06LA4**	123	16600	34000
0.12	0.4	2300	1.1	3533	**BK60G20-../DHE06LA4**	123	16600	34000
0.12	0.33	2500*	1.0	4239	**BK60G20-../DHE06LA4**	123	16600	34000
0.12	0.28	2500*	1.0	5072	**BK60G20-../DHE06LA4**	123	16600	34000
0.12	0.25	2500*	1.0	5721	**BK60G20-../DHE06LA4**	123	16600	34000
0.12	0.22	2500*	1.0	6565	**BK60G20-../DHE06LA4**	123	16600	34000
0.12	0.19	2500*	1.0	7291	**BK60G20-../DHE06LA4**	123	16600	34000
0.12	0.18	2500*	1.0	8093	**BK60G20-../DHE06LA4**	123	16600	34000
0.12	0.16	2500*	1.0	8990	**BK60G20-../DHE06LA4**	123	16600	34000
0.12	0.46	1840	3.1	3041	**BK70G20-../DHE06LA4**	201	24100	50000
0.12	0.4	2150	2.7	3505	**BK70G20-../DHE06LA4**	201	24100	50000
0.12	0.36	2450	2.3	3894	**BK70G20-../DHE06LA4**	201	24100	50000
0.12	0.31	2950	1.95	4531	**BK70G20-../DHE06LA4**	201	24100	50000
0.12	0.26	3700	1.55	5436	**BK70G20-../DHE06LA4**	201	24100	50000
0.12	0.22	4500	1.25	6504	**BK70G20-../DHE06LA4**	201	24100	50000
0.12	0.17	5700*	1.0	8149	**BK70G20-../DHE06LA4**	201	24100	50000

The torques marked (*) are maximum permissible torques for service factor f_B=1,0.

0.12 kW

P_N	50 Hz			i	Type	m		
	n_2	M_2	f_B					
[kW]	[1/min]	[Nm]	[—]	[:1]		[kg]	[N]	[N]
0.12	0.15	5700*	1.0	9351	**BK70G20-../DHE06LA4**	201	24100	50000

0.18 kW

P_N	50 Hz			i	Type	m		
	n_2	M_2	f_B					
[kW]	[1/min]	[Nm]	[—]	[:1]		[kg]	[N]	[N]
0.18	142	11.1	7.2	9.71	**BK06-../DHE05LA4**	9.5	880	-
0.18	118	13.4	6.0	11.67	**BK06-../DHE05LA4**	9.5	930	-
0.18	90	17.3	4.6	15.29	**BK06-../DHE05LA4**	9.5	1020	-
0.18	77	20	4.0	18.00	**BK06-../DHE05LA4**	9.5	1080	-
0.18	64	24	3.3	21.54	**BK06-../DHE05LA4**	9.5	1150	-
0.18	53	29	2.8	26.36	**BK06-../DHE05LA4**	9.5	1230	-
0.18	41.5	37	2.2	33.33	**BK06-../DHE05LA4**	9.5	1320	-
0.18	36.5	42	1.9	38.18	**BK06-../DHE05LA4**	9.5	1380	-
0.18	29	52	1.55	47.78	**BK06-../DHE05LA4**	9.5	1500	-
0.18	25.5	59	1.15	54.38	**BK06-../DHE05LA4**	9.5	1600	-
0.18	22	69	0.92	63.33	**BK06-../DHE05LA4**	9.5	1700	-
0.18	22.5	67	3.0	61.68	**BK10-../DHE06LA4**	23	7000	-
0.18	19	79	2.5	72.31	**BK10-../DHE06LA4**	23	7000	-
0.18	15.5	96	1.85	89.30	**BK10-../DHE06LA4**	23	7000	-
0.18	13.5	108	1.45	102.5	**BK10-../DHE06LA4**	23	7000	-
0.18	11.5	127	1.1	120.3	**BK10Z-../DHE06LA4**	24	7000	-
0.18	9.6	150	1.1	143.2	**BK10Z-../DHE06LA4**	24	7000	-
0.18	8.1	176	1.15	170.6	**BK10Z-../DHE06LA4**	24	7000	-
0.18	6.7	210	0.95	204.7	**BK10Z-../DHE06LA4**	24	7000	-
0.18	13	113	2.8	108.6	**BK20-../DHE06LA4**	33	8700	9000
0.18	11.5	127	2.6	124.2	**BK20Z-../DHE06LA4**	34	8700	9000
0.18	9.5	151	2.2	144.5	**BK20Z-../DHE06LA4**	34	8700	9000
0.18	8.0	178	1.85	173.4	**BK20Z-../DHE06LA4**	34	8700	9000
0.18	6.7	210	1.55	207.5	**BK20Z-../DHE06LA4**	34	8700	9000
0.18	5.3	265	1.25	259.9	**BK20Z-../DHE06LA4**	34	8700	9000
0.18	4.6	300	1.05	298.2	**BK20Z-../DHE06LA4**	34	8700	9000
0.18	3.8	360	0.81	367.7	**BK20Z-../DHE06LA4**	34	8700	9000
0.18	3.2	405	0.89	429.7	**BK20G06-../DHE06LA4**	38	8700	9000
0.18	2.9	445	0.81	480.4	**BK20G06-../DHE06LA4**	38	8700	9000
0.18	9.5	151	3.0	145.1	**BK30Z-../DHE06LA4**	41	11200	12000
0.18	7.5	190	2.4	184.8	**BK30Z-../DHE06LA4**	41	11200	12000
0.18	6.4	220	2.0	216.5	**BK30Z-../DHE06LA4**	41	11200	12000
0.18	5.4	260	1.75	255.3	**BK30Z-../DHE06LA4**	41	11200	12000
0.18	4.5	310	1.25	308.3	**BK30Z-../DHE06LA4**	41	11200	12000
0.18	3.6	385	1.05	380.7	**BK30Z-../DHE06LA4**	41	11200	12000
0.18	3.2	425	0.9	441.3	**BK30Z-../DHE06LA4**	41	11200	12000
0.18	3.0	430	1.15	471.5	**BK30G06-../DHE06LA4**	44	11200	12000
0.18	2.5	510	0.96	567.0	**BK30G06-../DHE06LA4**	44	11200	12000
0.18	2.1	610	0.8	652.5	**BK30G06-../DHE06LA4**	44	11200	12000
0.18	5.6	245	3.2	246.6	**BK40Z-../DHE06LA4**	64	11700	17000
0.18	4.8	290	2.4	289.8	**BK40Z-../DHE06LA4**	64	11700	17000
0.18	4.0	345	1.7	348.7	**BK40Z-../DHE06LA4**	64	11700	17000
0.18	3.2	425	1.35	430.0	**BK40Z-../DHE06LA4**	64	11700	17000
0.18	2.9	405	2.1	487.3	**BK40G10-../DHE06LA4**	68	11700	17000
0.18	2.6	450	1.9	540.0	**BK40G10-../DHE06LA4**	68	11700	17000
0.18	2.1	560	1.5	660.2	**BK40G10-../DHE06LA4**	68	11700	17000
0.18	1.9	630	1.35	756.7	**BK40G10-../DHE06LA4**	68	11700	17000
0.18	1.7	710	1.2	838.4	**BK40G10-../DHE06LA4**	68	11700	17000
0.18	1.4	870	0.98	998.3	**BK40G10-../DHE06LA4**	68	11700	17000
0.18	1.2	1020	0.83	1189	**BK40G10-../DHE06LA4**	68	11700	17000
0.18	4.2	330	3.1	328.2	**BK50Z-../DHE06LA4**	92	14100	26000
0.18	3.4	400	2.1	414.8	**BK50Z-../DHE06LA4**	92	14100	26000
0.18	3.0	395	2.9	465.1	**BK50G10-../DHE06LA4**	96	14100	111000
0.18	2.7	440	2.6	513.4	**BK50G10-../DHE06LA4**	96	14100	111000

The torques marked (*) are maximum permissible torques for service factor f_B=1,0.

0.18 kW

P_N	50 Hz			i	Type	m		
	n_2	M_2	f_B					
[kW]	[1/min]	[Nm]	[—]	[:1]		[kg]	[N]	[N]
0.18	2.5	480	2.4	568.6	**BK50G10-../DHE06LA4**	96	14100	111000
0.18	2.2	550	2.1	651.7	**BK50G10-../DHE06LA4**	96	14100	111000
0.18	1.9	640	1.8	722.2	**BK50G10-../DHE06LA4**	96	14100	111000
0.18	1.6	760	1.5	859.8	**BK50G10-../DHE06LA4**	96	14100	111000
0.18	1.4	880	1.3	1024	**BK50G10-../DHE06LA4**	96	14100	111000
0.18	1.2	1030	1.1	1230	**BK50G10-../DHE06LA4**	96	14100	111000
0.18	1.0	1240	0.93	1398	**BK50G10-../DHE06LA4**	96	14100	111000
0.18	1.4	920	2.7	1016	**BK60G20-../DHE06LA4**	123	16600	34000
0.18	1.1	1220	2.0	1322	**BK60G20-../DHE06LA4**	123	16600	34000
0.18	0.85	1610	1.55	1618	**BK60G20-../DHE06LA4**	123	16600	34000
0.18	0.8	1690	1.5	1810	**BK60G20-../DHE06LA4**	123	16600	34000
0.18	0.7	1980	1.25	2010	**BK60G20-../DHE06LA4**	123	16600	34000
0.18	0.6	2350	1.05	2371	**BK60G20-../DHE06LA4**	123	16600	34000
0.18	0.7	1940	2.9	2040	**BK70G20-../DHE06LA4**	201	24100	50000
0.18	0.55	2500	2.3	2578	**BK70G20-../DHE06LA4**	201	24100	50000
0.18	0.46	3050	1.85	3041	**BK70G20-../DHE06LA4**	201	24100	50000
0.18	0.4	3600	1.6	3505	**BK70G20-../DHE06LA4**	201	24100	50000
0.18	0.36	4050	1.4	3894	**BK70G20-../DHE06LA4**	201	24100	50000
0.18	0.31	4800	1.2	4531	**BK70G20-../DHE06LA4**	201	24100	50000

0.25 kW

P_N	50 Hz			i	Type	m		
	n_2	M_2	f_B					
[kW]	[1/min]	[Nm]	[—]	[:1]		[kg]	[N]	[N]
0.25	142	15.4	5.2	9.71	**BK06-../DHE07LA4**	14	880	-
0.25	118	18.6	4.3	11.67	**BK06-../DHE07LA4**	14	930	-
0.25	90	24	3.3	15.29	**BK06-../DHE07LA4**	14	1020	-
0.25	77	27.5	2.9	18.00	**BK06-../DHE07LA4**	14	1080	-
0.25	64	33.5	2.4	21.54	**BK06-../DHE07LA4**	14	1150	-
0.25	53	40.5	2.0	26.36	**BK06-../DHE07LA4**	14	1230	-
0.25	41.5	51	1.55	33.33	**BK06-../DHE07LA4**	14	1320	-
0.25	36.5	58	1.4	38.18	**BK06-../DHE07LA4**	14	1380	-
0.25	29	73	1.1	47.78	**BK06-../DHE07LA4**	14	1500	-
0.25	25.5	83	0.82	54.38	**BK06-../DHE07LA4**	14	1600	-
0.25	34	63	3.2	40.79	**BK10-../DHE07LA4**	26	6000	-
0.25	28.5	74	2.7	48.96	**BK10-../DHE07LA4**	26	6400	-
0.25	22.5	94	2.1	61.68	**BK10-../DHE07LA4**	26	7000	-
0.25	19.5	107	1.85	72.31	**BK10-../DHE07LA4**	26	7000	-
0.25	15.5	134	1.35	89.30	**BK10-../DHE07LA4**	26	7000	-
0.25	13.5	150	1.05	102.5	**BK10-../DHE07LA4**	26	7000	-
0.25	9.7	205	0.8	143.2	**BK10Z-../DHE07LA4**	27	7000	-
0.25	8.1	240	0.83	170.6	**BK10Z-../DHE07LA4**	27	7000	-
0.25	18	116	2.8	76.79	**BK20-../DHE07LA4**	35	7500	9000
0.25	16	129	2.6	88.12	**BK20-../DHE07LA4**	35	8000	9000
0.25	13	157	2.0	108.6	**BK20-../DHE07LA4**	35	8700	9000
0.25	11.5	176	1.9	124.2	**BK20Z-../DHE07LA4**	37	8700	9000
0.25	9.6	205	1.6	144.5	**BK20Z-../DHE07LA4**	37	8700	9000
0.25	8.0	245	1.35	173.4	**BK20Z-../DHE07LA4**	37	8700	9000
0.25	6.7	290	1.15	207.5	**BK20Z-../DHE07LA4**	37	8700	9000
0.25	5.3	365	0.9	259.9	**BK20Z-../DHE07LA4**	37	8700	9000
0.25	13.5	150	3.0	102.4	**BK30-../DHE07LA4**	41	11200	12000
0.25	11.5	176	2.6	123.9	**BK30Z-../DHE07LA4**	44	11200	12000
0.25	9.5	210	2.1	145.1	**BK30Z-../DHE07LA4**	44	11200	12000
0.25	7.5	260	1.75	184.8	**BK30Z-../DHE07LA4**	44	11200	12000
0.25	6.4	305	1.5	216.5	**BK30Z-../DHE07LA4**	44	11200	12000
0.25	5.4	360	1.25	255.3	**BK30Z-../DHE07LA4**	44	11200	12000
0.25	4.5	435	0.89	308.3	**BK30Z-../DHE07LA4**	44	11200	12000
0.25	3.0	610	0.8	471.5	**BK30G06-../DHE07LA4**	46	11200	12000
0.25	8.2	240	3.3	169.0	**BK40Z-../DHE07LA4**	66	11700	17000

The torques marked (*) are maximum permissible torques for service factor f_B=1,0.

0.25 kW

P_N	50 Hz			i	Type	m		
	n_2	M_2	f_B					
[kW]	[1/min]	[Nm]	[—]	[:1]		[kg]	[N]	[N]
0.25	6.6	295	2.6	211.5	**BK40Z-../DHE07LA4**	66	11700	17000
0.25	5.6	345	2.3	246.6	**BK40Z-../DHE07LA4**	66	11700	17000
0.25	4.8	400	1.7	289.8	**BK40Z-../DHE07LA4**	66	11700	17000
0.25	4.0	480	1.2	348.7	**BK40Z-../DHE07LA4**	66	11700	17000
0.25	3.2	590	0.97	430.0	**BK40Z-../DHE07LA4**	66	11700	17000
0.25	2.9	580	1.45	487.3	**BK40G10-../DHE07LA4**	71	11700	17000
0.25	2.6	650	1.3	540.0	**BK40G10-../DHE07LA4**	71	11700	17000
0.25	2.1	810	1.05	660.2	**BK40G10-../DHE07LA4**	71	11700	17000
0.25	1.9	900	0.94	756.7	**BK40G10-../DHE07LA4**	71	11700	17000
0.25	1.7	1010	0.84	838.4	**BK40G10-../DHE07LA4**	71	11700	17000
0.25	5.2	370	2.8	264.5	**BK50Z-../DHE07LA4**	95	14100	26000
0.25	4.2	460	2.2	328.2	**BK50Z-../DHE07LA4**	95	14100	26000
0.25	3.4	560	1.5	414.8	**BK50Z-../DHE07LA4**	95	14100	26000
0.25	3.0	570	2.0	465.1	**BK50G10-../DHE07LA4**	99	14100	111000
0.25	2.7	630	1.85	513.4	**BK50G10-../DHE07LA4**	99	14100	111000
0.25	2.5	690	1.65	568.6	**BK50G10-../DHE07LA4**	99	14100	111000
0.25	2.2	780	1.45	651.7	**BK50G10-../DHE07LA4**	99	14100	111000
0.25	2.0	870	1.3	722.2	**BK50G10-../DHE07LA4**	99	14100	111000
0.25	1.6	1090	1.05	859.8	**BK50G10-../DHE07LA4**	99	14100	111000
0.25	1.4	1250	0.92	1024	**BK50G10-../DHE07LA4**	99	14100	111000
0.25	2.3	770	3.2	621.5	**BK60G20-../DHE07LA4**	125	16600	34000
0.25	1.9	940	2.7	752.1	**BK60G20-../DHE07LA4**	125	16600	34000
0.25	1.6	1150	2.2	887.8	**BK60G20-../DHE07LA4**	125	16600	34000
0.25	1.4	1400	1.8	1016	**BK60G20-../DHE07LA4**	125	16600	34000
0.25	1.1	1830	1.35	1322	**BK60G20-../DHE07LA4**	125	16600	34000
0.25	0.85	2350	1.05	1618	**BK60G20-../DHE07LA4**	125	16600	34000
0.25	1.1	1790	3.2	1280	**BK70G20-../DHE07LA4**	204	24100	50000
0.25	0.95	2050	2.8	1457	**BK70G20-../DHE07LA4**	204	24100	50000
0.25	0.85	2350	2.4	1696	**BK70G20-../DHE07LA4**	204	24100	50000
0.25	0.7	2850	2.0	2040	**BK70G20-../DHE07LA4**	204	24100	50000
0.25	0.55	3700	1.55	2578	**BK70G20-../DHE07LA4**	204	24100	50000
0.25	0.46	4500	1.25	3041	**BK70G20-../DHE07LA4**	204	24100	50000
0.25	0.4	5200	1.1	3505	**BK70G20-../DHE07LA4**	204	24100	50000

0.3 kW

P_N	50 Hz			i	Type	m		
	n_2	M_2	f_B					
[kW]	[1/min]	[Nm]	[—]	[:1]		[kg]	[N]	[N]
0.3	141	18.6	4.3	9.71	**BK06-../DHE07LA4**	14	880	-
0.3	117	22.5	3.6	11.67	**BK06-../DHE07LA4**	14	930	-
0.3	89	29	2.8	15.29	**BK06-../DHE07LA4**	14	1020	-
0.3	76	33.5	2.4	18.00	**BK06-../DHE07LA4**	14	1080	-
0.3	64	40	2.0	21.54	**BK06-../DHE07LA4**	14	1150	-
0.3	52	49.5	1.6	26.36	**BK06-../DHE07LA4**	14	1230	-
0.3	41	62	1.3	33.33	**BK06-../DHE07LA4**	14	1320	-
0.3	36	71	1.15	38.18	**BK06-../DHE07LA4**	14	1380	-
0.3	28.5	89	0.9	47.78	**BK06-../DHE07LA4**	14	1500	-
0.3	40	64	3.1	34.25	**BK10-../DHE07LA4**	26	5600	-
0.3	33.5	76	2.6	40.79	**BK10-../DHE07LA4**	26	6000	-
0.3	28	91	2.2	48.96	**BK10-../DHE07LA4**	26	6400	-
0.3	22.5	113	1.75	61.68	**BK10-../DHE07LA4**	26	7000	-
0.3	19	132	1.5	72.31	**BK10-../DHE07LA4**	26	7000	-
0.3	15.5	160	1.1	89.30	**BK10-../DHE07LA4**	26	7000	-
0.3	13.5	180	0.87	102.5	**BK10-../DHE07LA4**	26	7000	-
0.3	22.5	113	2.9	61.30	**BK20-../DHE07LA4**	35	6500	9000
0.3	18	140	2.4	76.79	**BK20-../DHE07LA4**	35	7500	9000
0.3	15.5	160	2.1	88.12	**BK20-../DHE07LA4**	35	8000	9000
0.3	13	189	1.65	108.6	**BK20-../DHE07LA4**	35	8700	9000
0.3	11	220	1.5	124.2	**BK20Z-../DHE07LA4**	37	8700	9000
0.3	9.5	250	1.3	144.5	**BK20Z-../DHE07LA4**	37	8700	9000

The torques marked (*) are maximum permissible torques for service factor f_B=1,0.

0.3 kW

P_N	50 Hz			i	Type	m		
	n_2	M_2	f_B					
[kW]	[1/min]	[Nm]	[—]	[:1]		[kg]	[N]	[N]
0.3	7.9	300	1.1	173.4	**BK20Z-../DHE07LA4**	37	8700	9000
0.3	6.6	355	0.93	207.5	**BK20Z-../DHE07LA4**	37	8700	9000
0.3	15.5	158	2.8	88.38	**BK30-../DHE07LA4**	41	10600	12000
0.3	13.5	180	2.5	102.4	**BK30-../DHE07LA4**	41	11200	12000
0.3	11	220	2.0	123.9	**BK30Z-../DHE07LA4**	44	11200	12000
0.3	9.4	255	1.75	145.1	**BK30Z-../DHE07LA4**	44	11200	12000
0.3	7.4	320	1.4	184.8	**BK30Z-../DHE07LA4**	44	11200	12000
0.3	6.3	370	1.2	216.5	**BK30Z-../DHE07LA4**	44	11200	12000
0.3	5.4	435	1.05	255.3	**BK30Z-../DHE07LA4**	44	11200	12000
0.3	9.6	250	3.1	143.0	**BK40Z-../DHE07LA4**	66	11700	17000
0.3	8.1	290	2.7	169.0	**BK40Z-../DHE07LA4**	66	11700	17000
0.3	6.5	360	2.2	211.5	**BK40Z-../DHE07LA4**	66	11700	17000
0.3	5.6	410	1.9	246.6	**BK40Z-../DHE07LA4**	66	11700	17000
0.3	4.7	490	1.4	289.8	**BK40Z-../DHE07LA4**	66	11700	17000
0.3	4.0	580	1.0	348.7	**BK40Z-../DHE07LA4**	66	11700	17000
0.3	3.2	710	0.81	430.0	**BK40Z-../DHE07LA4**	66	11700	17000
0.3	2.8	740	1.15	487.3	**BK40G10-../DHE07LA4**	71	11700	17000
0.3	2.6	800	1.05	540.0	**BK40G10-../DHE07LA4**	71	11700	17000
0.3	2.1	990	0.86	660.2	**BK40G10-../DHE07LA4**	71	11700	17000
0.3	6.6	355	3.0	206.8	**BK50Z-../DHE07LA4**	95	14100	26000
0.3	5.2	445	2.4	264.5	**BK50Z-../DHE07LA4**	95	14100	26000
0.3	4.2	550	1.85	328.2	**BK50Z-../DHE07LA4**	95	14100	26000
0.3	3.3	690	1.2	414.8	**BK50Z-../DHE07LA4**	95	14100	26000
0.3	3.0	700	1.65	465.1	**BK50G10-../DHE07LA4**	99	14100	111000
0.3	2.7	770	1.5	513.4	**BK50G10-../DHE07LA4**	99	14100	111000
0.3	2.4	870	1.3	568.6	**BK50G10-../DHE07LA4**	99	14100	111000
0.3	2.1	1000	1.15	651.7	**BK50G10-../DHE07LA4**	99	14100	111000
0.3	1.9	1110	1.05	722.2	**BK50G10-../DHE07LA4**	99	14100	111000
0.3	1.6	1320	0.87	859.8	**BK50G10-../DHE07LA4**	99	14100	111000
0.3	2.2	1040	2.4	621.5	**BK60G20-../DHE07LA4**	125	16600	34000
0.3	1.9	1190	2.1	752.1	**BK60G20-../DHE07LA4**	125	16600	34000
0.3	1.6	1450	1.7	887.8	**BK60G20-../DHE07LA4**	125	16600	34000
0.3	1.4	1740	1.45	1016	**BK60G20-../DHE07LA4**	125	16600	34000
0.3	1.1	2250	1.1	1322	**BK60G20-../DHE07LA4**	125	16600	34000
0.3	1.2	1950	2.9	1139	**BK70G20-../DHE07LA4**	204	24100	50000
0.3	1.1	2200	2.6	1280	**BK70G20-../DHE07LA4**	204	24100	50000
0.3	0.95	2550	2.2	1457	**BK70G20-../DHE07LA4**	204	24100	50000
0.3	0.85	2900	1.95	1696	**BK70G20-../DHE07LA4**	204	24100	50000
0.3	0.7	3550	1.6	2040	**BK70G20-../DHE07LA4**	204	24100	50000
0.3	0.55	4600	1.25	2578	**BK70G20-../DHE07LA4**	204	24100	50000

0.37 kW

P_N	50 Hz			i	Type	m		
	n_2	M_2	f_B					
[kW]	[1/min]	[Nm]	[—]	[:1]		[kg]	[N]	[N]
0.37	198	16.4	4.5	7.25	**BK06-../DHE08MA4**	15	800	-
0.37	148	21.5	3.7	9.71	**BK06-../DHE08MA4**	15	880	-
0.37	123	26	3.1	11.67	**BK06-../DHE08MA4**	15	930	-
0.37	94	34	2.4	15.29	**BK06-../DHE08MA4**	15	1020	-
0.37	80	39.5	2.0	18.00	**BK06-../DHE08MA4**	15	1080	-
0.37	67	47	1.7	21.54	**BK06-../DHE08MA4**	15	1150	-
0.37	55	57	1.4	26.36	**BK06-../DHE08MA4**	15	1230	-
0.37	43	73	1.1	33.33	**BK06-../DHE08MA4**	15	1320	-
0.37	37.5	84	0.95	38.18	**BK06-../DHE08MA4**	15	1380	-
0.37	50	63	3.2	28.76	**BK10-../DHE08MA4**	27	5200	-
0.37	42	75	2.7	34.25	**BK10-../DHE08MA4**	27	5600	-
0.37	35.5	89	2.2	40.79	**BK10-../DHE08MA4**	27	6000	-
0.37	29.5	106	1.9	48.96	**BK10-../DHE08MA4**	27	6400	-
0.37	23.5	133	1.5	61.68	**BK10-../DHE08MA4**	27	7000	-

The torques marked (*) are maximum permissible torques for service factor f_B=1,0.

0.37 kW

P_N	50 Hz			i	Type	m		
	n_2	M_2	f_B					
[kW]	[1/min]	[Nm]	[—]	[:1]		[kg]	[N]	[N]
0.37	20	155	1.3	72.31	**BK10-../DHE08MA4**	27	7000	-
0.37	16.5	186	0.96	89.30	**BK10-../DHE08MA4**	27	7000	-
0.37	28	112	2.9	51.22	**BK20-../DHE08MA4**	36	6300	9000
0.37	23.5	133	2.5	61.30	**BK20-../DHE08MA4**	36	6500	9000
0.37	19	163	2.0	76.79	**BK20-../DHE08MA4**	36	7500	9000
0.37	16.5	186	1.75	88.12	**BK20-../DHE08MA4**	36	8000	9000
0.37	13.5	225	1.4	108.6	**BK20-../DHE08MA4**	36	8700	9000
0.37	12	250	1.3	124.2	**BK20Z-../DHE08MA4**	38	8700	9000
0.37	9.9	295	1.1	144.5	**BK20Z-../DHE08MA4**	38	8700	9000
0.37	8.3	350	0.94	173.4	**BK20Z-../DHE08MA4**	38	8700	9000
0.37	6.9	415	0.8	207.5	**BK20Z-../DHE08MA4**	38	8700	9000
0.37	20	153	2.9	71.56	**BK30-../DHE08MA4**	42	9700	12000
0.37	16.5	184	2.4	88.38	**BK30-../DHE08MA4**	42	10600	12000
0.37	14	210	2.1	102.4	**BK30-../DHE08MA4**	42	11200	12000
0.37	12	250	1.8	123.9	**BK30Z-../DHE08MA4**	45	11200	12000
0.37	9.9	295	1.55	145.1	**BK30Z-../DHE08MA4**	45	11200	12000
0.37	7.8	375	1.2	184.8	**BK30Z-../DHE08MA4**	45	11200	12000
0.37	6.7	430	1.05	216.5	**BK30Z-../DHE08MA4**	45	11200	12000
0.37	5.7	500	0.9	255.3	**BK30Z-../DHE08MA4**	45	11200	12000
0.37	12.5	240	3.3	118.2	**BK40Z-../DHE08MA4**	67	11700	17000
0.37	10	295	2.6	143.0	**BK40Z-../DHE08MA4**	67	11700	17000
0.37	8.5	345	2.3	169.0	**BK40Z-../DHE08MA4**	67	11700	17000
0.37	6.8	425	1.85	211.5	**BK40Z-../DHE08MA4**	67	11700	17000
0.37	5.8	490	1.6	246.6	**BK40Z-../DHE08MA4**	67	11700	17000
0.37	5.0	570	1.2	289.8	**BK40Z-../DHE08MA4**	67	11700	17000
0.37	4.2	680	0.85	348.7	**BK40Z-../DHE08MA4**	67	11700	17000
0.37	3.0	870	0.98	487.3	**BK40G10-../DHE08MA4**	72	11700	17000
0.37	2.7	960	0.89	540.0	**BK40G10-../DHE08MA4**	72	11700	17000
0.37	7.0	410	2.6	206.8	**BK50Z-../DHE08MA4**	96	14100	26000
0.37	5.5	520	2.0	264.5	**BK50Z-../DHE08MA4**	96	14100	26000
0.37	4.4	650	1.55	328.2	**BK50Z-../DHE08MA4**	96	14100	26000
0.37	3.5	800	1.05	414.8	**BK50Z-../DHE08MA4**	96	14100	26000
0.37	3.1	840	1.35	465.1	**BK50G10-../DHE08MA4**	100	14100	111000
0.37	2.8	930	1.25	513.4	**BK50G10-../DHE08MA4**	100	14100	111000
0.37	2.6	1010	1.15	568.6	**BK50G10-../DHE08MA4**	100	14100	111000
0.37	2.2	1190	0.97	651.7	**BK50G10-../DHE08MA4**	100	14100	111000
0.37	2.0	1310	0.88	722.2	**BK50G10-../DHE08MA4**	100	14100	111000
0.37	4.6	760	3.0	317.7	**BK60Z-../DHE08MA4**	119	16600	34000
0.37	4.1	860	2.7	355.5	**BK60Z-../DHE08MA4**	119	16600	34000
0.37	3.5	1000	2.3	411.5	**BK60Z-../DHE08MA4**	119	16600	34000
0.37	3.2	1100	2.1	460.4	**BK60Z-../DHE08MA4**	119	16600	34000
0.37	2.9	1210	1.9	498.0	**BK60Z-../DHE08MA4**	119	16600	34000
0.37	2.6	1350	1.7	557.2	**BK60Z-../DHE08MA4**	119	16600	34000
0.37	2.4	1210	2.1	621.5	**BK60G20-../DHE08MA4**	126	16600	34000
0.37	2.0	1450	1.7	752.1	**BK60G20-../DHE08MA4**	126	16600	34000
0.37	1.7	1740	1.45	887.8	**BK60G20-../DHE08MA4**	126	16600	34000
0.37	1.5	2050	1.2	1016	**BK60G20-../DHE08MA4**	126	16600	34000
0.37	1.1	2850	0.88	1322	**BK60G20-../DHE08MA4**	126	16600	34000
0.37	2.0	1760	3.0	733.6	**BK70Z-../DHE08MA4**	207	24100	50000
0.37	1.7	1720	3.3	847.7	**BK70G20-../DHE08MA4**	205	24100	50000
0.37	1.5	1950	2.9	964.6	**BK70G20-../DHE08MA4**	205	24100	50000
0.37	1.3	2250	2.5	1139	**BK70G20-../DHE08MA4**	205	24100	50000
0.37	1.2	2550	2.2	1280	**BK70G20-../DHE08MA4**	205	24100	50000
0.37	1.0	3100	1.85	1457	**BK70G20-../DHE08MA4**	205	24100	50000
0.37	0.85	3700	1.55	1696	**BK70G20-../DHE08MA4**	205	24100	50000
0.37	0.75	4150	1.35	2040	**BK70G20-../DHE08MA4**	205	24100	50000
0.37	0.6	5200	1.1	2578	**BK70G20-../DHE08MA4**	205	24100	50000
0.37	0.65	4000	2.9	2205	**BK80G40-../DHE08MA4**	347	30000	75000
0.37	0.6	4400	2.6	2449	**BK80G40-../DHE08MA4**	347	30000	75000
0.37	0.55	4950	2.3	2811	**BK80G40-../DHE08MA4**	347	30000	75000
0.37	0.46	6200	1.85	3120	**BK80G40-../DHE08MA4**	347	30000	75000
0.37	0.38	7800	1.45	3776	**BK80G40-../DHE08MA4**	347	30000	75000
0.37	0.33	9200	1.25	4461	**BK80G40-../DHE08MA4**	347	30000	75000

The torques marked (*) are maximum permissible torques for service factor f_B=1,0.

0.37 kW

P_N	50 Hz			i	Type	m		
	n_2	M_2	f_B					
[kW]	[1/min]	[Nm]	[—]	[:1]		[kg]	[N]	[N]
0.37	0.29	10700	1.05	5032	**BK80G40-../DHE08MA4**	347	30000	75000
0.37	0.39	6900	2.7	3672	**BK90G50-../DHE08MA4**	620	49400	120000
0.37	0.36	7700	2.4	4070	**BK90G50-../DHE08MA4**	620	49400	120000
0.37	0.29	10000	1.85	4952	**BK90G50-../DHE08MA4**	620	49400	120000
0.37	0.27	10900	1.7	5491	**BK90G50-../DHE08MA4**	620	49400	120000
0.37	0.23	13200	1.4	6335	**BK90G50-../DHE08MA4**	620	49400	120000
0.37	0.21	14700	1.25	7022	**BK90G50-../DHE08MA4**	620	49400	120000
0.37	0.19	16400	1.15	7862	**BK90G50-../DHE08MA4**	620	49400	120000

0.55 kW

P_N	50 Hz			i	Type	m		
	n_2	M_2	f_B					
[kW]	[1/min]	[Nm]	[—]	[:1]		[kg]	[N]	[N]
0.55	196	24.5	3.0	7.25	**BK06-../DHE08LA4**	16	800	-
0.55	146	33	2.4	9.71	**BK06-../DHE08LA4**	16	880	-
0.55	122	39.5	2.0	11.67	**BK06-../DHE08LA4**	16	930	-
0.55	93	51	1.55	15.29	**BK06-../DHE08LA4**	16	1020	-
0.55	79	59	1.35	18.00	**BK06-../DHE08LA4**	16	1080	-
0.55	66	71	1.15	21.54	**BK06-../DHE08LA4**	16	1150	-
0.55	54	87	0.92	26.36	**BK06-../DHE08LA4**	16	1230	-
0.55	119	40.5	2.8	11.93	**BK10-../DHE08LA4**	28	3100	-
0.55	84	56	2.4	16.92	**BK10-../DHE08LA4**	28	3700	-
0.55	77	61	3.3	18.52	**BK10-../DHE08LA4**	28	4300	-
0.55	63	75	2.7	22.65	**BK10-../DHE08LA4**	28	4650	-
0.55	49.5	95	2.1	28.76	**BK10-../DHE08LA4**	28	5200	-
0.55	41.5	113	1.75	34.25	**BK10-../DHE08LA4**	28	5600	-
0.55	35	135	1.5	40.79	**BK10-../DHE08LA4**	28	6000	-
0.55	29	161	1.25	48.96	**BK10-../DHE08LA4**	28	6400	-
0.55	23	200	1.0	61.68	**BK10-../DHE08LA4**	28	7000	-
0.55	20	230	0.87	72.31	**BK10-../DHE08LA4**	28	7000	-
0.55	39	121	2.7	36.69	**BK20-../DHE08LA4**	38	5400	9000
0.55	33.5	141	2.3	42.70	**BK20-../DHE08LA4**	38	5800	9000
0.55	28	166	2.0	51.22	**BK20-../DHE08LA4**	38	6300	9000
0.55	23.5	198	1.65	61.30	**BK20-../DHE08LA4**	38	6500	9000
0.55	18.5	245	1.35	76.79	**BK20-../DHE08LA4**	38	7500	9000
0.55	16.5	275	1.2	88.12	**BK20-../DHE08LA4**	38	8000	9000
0.55	13.5	330	0.95	108.6	**BK20-../DHE08LA4**	38	8700	9000
0.55	11.5	385	0.86	124.2	**BK20Z-../DHE08LA4**	40	8700	9000
0.55	33	141	3.2	42.89	**BK30-../DHE08LA4**	44	7800	12000
0.55	28.5	162	2.8	50.27	**BK30-../DHE08LA4**	44	8300	12000
0.55	24	192	2.3	59.27	**BK30-../DHE08LA4**	44	8900	12000
0.55	20	225	2.0	71.56	**BK30-../DHE08LA4**	44	9700	12000
0.55	16.5	270	1.65	88.38	**BK30-../DHE08LA4**	44	10600	12000
0.55	14	315	1.45	102.4	**BK30-../DHE08LA4**	44	11200	12000
0.55	11.5	385	1.15	123.9	**BK30Z-../DHE08LA4**	46	11200	12000
0.55	9.8	450	1.0	145.1	**BK30Z-../DHE08LA4**	46	11200	12000
0.55	7.7	560	0.8	184.8	**BK30Z-../DHE08LA4**	46	11200	12000
0.55	17	265	2.9	84.36	**BK40-../DHE08LA4**	64	10700	17000
0.55	14	315	2.5	104.0	**BK40-../DHE08LA4**	64	11700	17000
0.55	12	370	2.1	118.2	**BK40Z-../DHE08LA4**	69	11700	17000
0.55	9.9	445	1.75	143.0	**BK40Z-../DHE08LA4**	69	11700	17000
0.55	8.4	510	1.55	169.0	**BK40Z-../DHE08LA4**	69	11700	17000
0.55	6.7	640	1.2	211.5	**BK40Z-../DHE08LA4**	69	11700	17000
0.55	5.8	730	1.05	246.6	**BK40Z-../DHE08LA4**	69	11700	17000
0.55	4.9	860	0.8	289.8	**BK40Z-../DHE08LA4**	69	11700	17000
0.55	12.5	355	3.0	115.4	**BK50Z-../DHE08LA4**	98	14100	26000
0.55	9.3	465	2.3	153.3	**BK50Z-../DHE08LA4**	98	14100	26000
0.55	6.9	620	1.7	206.8	**BK50Z-../DHE08LA4**	98	14100	26000
0.55	5.4	780	1.35	264.5	**BK50Z-../DHE08LA4**	98	14100	26000

The torques marked (*) are maximum permissible torques for service factor f_B=1,0.

0.55 kW

P_N	50 Hz			i	Type	m		
	n_2	M_2	f_B					
[kW]	[1/min]	[Nm]	[—]	[:1]		[kg]	[N]	[N]
0.55	4.4	960	1.05	328.2	**BK50Z-../DHE08LA4**	98	14100	26000
0.55	3.1	1290	0.89	465.1	**BK50G10-../DHE08LA4**	102	14100	111000
0.55	2.8	1420	0.81	513.4	**BK50G10-../DHE08LA4**	102	14100	111000
0.55	7.0	750	3.1	205.0	**BK60Z-../DHE08LA4**	120	16600	34000
0.55	6.0	870	2.6	239.7	**BK60Z-../DHE08LA4**	120	16600	34000
0.55	5.3	990	2.3	268.2	**BK60Z-../DHE08LA4**	120	16600	34000
0.55	4.5	1160	2.0	317.7	**BK60Z-../DHE08LA4**	120	16600	34000
0.55	4.0	1310	1.75	355.5	**BK60Z-../DHE08LA4**	120	16600	34000
0.55	3.5	1500	1.55	411.5	**BK60Z-../DHE08LA4**	120	16600	34000
0.55	3.1	1690	1.35	460.4	**BK60Z-../DHE08LA4**	120	16600	34000
0.55	2.9	1810	1.25	498.0	**BK60Z-../DHE08LA4**	120	16600	34000
0.55	2.6	2000	1.15	557.2	**BK60Z-../DHE08LA4**	120	16600	34000
0.55	2.3	2000	1.25	621.5	**BK60G20-../DHE08LA4**	128	16600	34000
0.55	1.9	2400	1.05	752.1	**BK60G20-../DHE08LA4**	128	16600	34000
0.55	1.6	2900	0.86	887.8	**BK60G20-../DHE08LA4**	128	16600	34000
0.55	3.3	1590	3.3	432.1	**BK70Z-../DHE08LA4**	208	24100	50000
0.55	2.9	1810	2.9	501.8	**BK70Z-../DHE08LA4**	208	24100	50000
0.55	2.5	2100	2.5	570.8	**BK70Z-../DHE08LA4**	208	24100	50000
0.55	2.2	2350	2.2	644.9	**BK70Z-../DHE08LA4**	208	24100	50000
0.55	2.0	2600	2.0	733.6	**BK70Z-../DHE08LA4**	208	24100	50000
0.55	1.7	2700	2.1	847.7	**BK70G20-../DHE08LA4**	206	24100	50000
0.55	1.5	3050	1.85	964.6	**BK70G20-../DHE08LA4**	206	24100	50000
0.55	1.3	3600	1.6	1139	**BK70G20-../DHE08LA4**	206	24100	50000
0.55	1.2	4000	1.45	1280	**BK70G20-../DHE08LA4**	206	24100	50000
0.55	1.0	4800	1.2	1457	**BK70G20-../DHE08LA4**	206	24100	50000
0.55	1.1	3750	3.1	1307	**BK80G40-../DHE08LA4**	348	30000	75000
0.55	1.0	4050	2.8	1425	**BK80G40-../DHE08LA4**	348	30000	75000
0.55	0.9	4600	2.5	1583	**BK80G40-../DHE08LA4**	348	30000	75000
0.55	0.8	5200	2.2	1775	**BK80G40-../DHE08LA4**	348	30000	75000
0.55	0.65	6600	1.75	2205	**BK80G40-../DHE08LA4**	348	30000	75000
0.55	0.6	7300	1.6	2449	**BK80G40-../DHE08LA4**	348	30000	75000
0.55	0.55	8000	1.45	2811	**BK80G40-../DHE08LA4**	348	30000	75000
0.55	0.46	9900	1.15	3120	**BK80G40-../DHE08LA4**	348	30000	75000
0.55	0.55	7400	2.5	2764	**BK90G50-../DHE08LA4**	621	49400	120000
0.55	0.47	9000	2.1	3065	**BK90G50-../DHE08LA4**	621	49400	120000
0.55	0.39	11300	1.65	3672	**BK90G50-../DHE08LA4**	621	49400	120000
0.55	0.35	12900	1.45	4070	**BK90G50-../DHE08LA4**	621	49400	120000
0.55	0.29	16000	1.15	4952	**BK90G50-../DHE08LA4**	621	49400	120000
0.55	0.26	18000	1.05	5491	**BK90G50-../DHE08LA4**	621	49400	120000

0.75 kW

P_N	50 Hz			i	Type	m		
	n_2	M_2	f_B					
[kW]	[1/min]	[Nm]	[—]	[:1]		[kg]	[N]	[N]
0.75	196	33.5	2.2	7.25	**BK06-../DHE08XA4**	18	800	-
0.75	147	44.5	1.8	9.71	**BK06-../DHE08XA4**	18	880	-
0.75	122	54	1.5	11.67	**BK06-../DHE08XA4**	18	930	-
0.75	93	70	1.15	15.29	**BK06-../DHE08XA4**	18	1020	-
0.75	79	81	0.99	18.00	**BK06-../DHE08XA4**	18	1080	-
0.75	66	97	0.82	21.54	**BK06-../DHE08XA4**	18	1150	-
0.75	185	35.5	3.2	7.68	**BK10-../DHE08XA4**	30	2400	-
0.75	152	43	2.7	9.40	**BK10-../DHE08XA4**	30	2700	-
0.75	120	54	2.1	11.93	**BK10-../DHE08XA4**	30	3100	-
0.75	98	65	3.1	14.50	**BK10-../DHE08XA4**	30	3900	-
0.75	84	76	1.8	16.92	**BK10-../DHE08XA4**	30	3700	-
0.75	77	83	2.4	18.52	**BK10-../DHE08XA4**	30	4300	-
0.75	63	102	1.95	22.65	**BK10-../DHE08XA4**	30	4650	-
0.75	49.5	130	1.55	28.76	**BK10-../DHE08XA4**	30	5200	-
0.75	41.5	155	1.3	34.25	**BK10-../DHE08XA4**	30	5600	-
0.75	35	184	1.1	40.79	**BK10-../DHE08XA4**	30	6000	-

The torques marked (*) are maximum permissible torques for service factor f_B=1,0.

0.75 kW

P_N	50 Hz			i	Type	m		
	n_2	M_2	f_B					
[kW]	[1/min]	[Nm]	[—]	[:1]		[kg]	[N]	[N]
0.75	29.5	215	0.93	48.96	**BK10-../DHE08XA4**	30	6400	-
0.75	82	79	2.9	17.42	**BK20-../DHE08XA4**	39	3250	9000
0.75	59	109	3.0	24.29	**BK20-../DHE08XA4**	39	4500	9000
0.75	50	128	2.6	28.66	**BK20-../DHE08XA4**	39	4850	9000
0.75	39	165	2.0	36.69	**BK20-../DHE08XA4**	39	5400	9000
0.75	33.5	192	1.7	42.70	**BK20-../DHE08XA4**	39	5800	9000
0.75	28	225	1.45	51.22	**BK20-../DHE08XA4**	39	6300	9000
0.75	23.5	270	1.2	61.30	**BK20-../DHE08XA4**	39	6500	9000
0.75	18.5	340	0.97	76.79	**BK20-../DHE08XA4**	39	7500	9000
0.75	16.5	375	0.88	88.12	**BK20-../DHE08XA4**	39	8000	9000
0.75	42.5	151	3.0	33.70	**BK30-../DHE08XA4**	45	7000	12000
0.75	33.5	190	2.4	42.89	**BK30-../DHE08XA4**	45	7800	12000
0.75	28.5	220	2.0	50.27	**BK30-../DHE08XA4**	45	8300	12000
0.75	24	260	1.75	59.27	**BK30-../DHE08XA4**	45	8900	12000
0.75	20	310	1.45	71.56	**BK30-../DHE08XA4**	45	9700	12000
0.75	16.5	370	1.2	88.38	**BK30-../DHE08XA4**	45	10600	12000
0.75	14	430	1.05	102.4	**BK30-../DHE08XA4**	45	11200	12000
0.75	11.5	520	0.87	123.9	**BK30Z-../DHE08XA4**	48	11200	12000
0.75	24	260	3.0	59.66	**BK40-../DHE08XA4**	65	9100	17000
0.75	20.5	300	2.6	70.11	**BK40-../DHE08XA4**	65	9800	17000
0.75	17	365	2.1	84.36	**BK40-../DHE08XA4**	65	10700	17000
0.75	14	430	1.8	104.0	**BK40-../DHE08XA4**	65	11700	17000
0.75	12.5	485	1.6	118.2	**BK40Z-../DHE08XA4**	70	11700	17000
0.75	10	600	1.3	143.0	**BK40Z-../DHE08XA4**	70	11700	17000
0.75	8.5	690	1.15	169.0	**BK40Z-../DHE08XA4**	70	11700	17000
0.75	6.8	860	0.91	211.5	**BK40Z-../DHE08XA4**	70	11700	17000
0.75	19	325	3.2	75.40	**BK50-../DHE08XA4**	94	12600	26000
0.75	15	410	2.6	95.29	**BK50-../DHE08XA4**	94	14100	26000
0.75	12.5	485	2.2	115.4	**BK50Z-../DHE08XA4**	98	14100	26000
0.75	9.3	630	1.65	153.3	**BK50Z-../DHE08XA4**	98	14100	26000
0.75	6.9	850	1.25	206.8	**BK50Z-../DHE08XA4**	98	14100	26000
0.75	5.4	1070	0.98	264.5	**BK50Z-../DHE08XA4**	98	14100	26000
0.75	9.3	770	3.0	153.7	**BK60Z-../DHE08XA4**	121	16600	34000
0.75	7.8	910	2.5	183.2	**BK60Z-../DHE08XA4**	121	16600	34000
0.75	7.0	1020	2.3	205.0	**BK60Z-../DHE08XA4**	121	16600	34000
0.75	6.0	1190	1.95	239.7	**BK60Z-../DHE08XA4**	121	16600	34000
0.75	5.3	1350	1.7	268.2	**BK60Z-../DHE08XA4**	121	16600	34000
0.75	4.5	1590	1.45	317.7	**BK60Z-../DHE08XA4**	121	16600	34000
0.75	4.0	1790	1.3	355.5	**BK60Z-../DHE08XA4**	121	16600	34000
0.75	3.5	2000	1.15	411.5	**BK60Z-../DHE08XA4**	121	16600	34000
0.75	3.1	2300	1.0	460.4	**BK60Z-../DHE08XA4**	121	16600	34000
0.75	2.9	2450	0.94	498.0	**BK60Z-../DHE08XA4**	121	16600	34000
0.75	2.6	2750	0.84	557.2	**BK60Z-../DHE08XA4**	121	16600	34000
0.75	2.3	2850	0.88	621.5	**BK60G20-../DHE08XA4**	129	16600	34000
0.75	4.3	1660	3.1	333.6	**BK70Z-../DHE08XA4**	210	24100	50000
0.75	3.8	1880	2.8	379.9	**BK70Z-../DHE08XA4**	210	24100	50000
0.75	3.3	2150	2.4	432.1	**BK70Z-../DHE08XA4**	210	24100	50000
0.75	2.9	2450	2.1	501.8	**BK70Z-../DHE08XA4**	210	24100	50000
0.75	2.5	2850	1.8	570.8	**BK70Z-../DHE08XA4**	210	24100	50000
0.75	2.3	3100	1.7	644.9	**BK70Z-../DHE08XA4**	210	24100	50000
0.75	2.0	3550	1.45	733.6	**BK70Z-../DHE08XA4**	210	24100	50000
0.75	1.7	3850	1.5	847.7	**BK70G20-../DHE08XA4**	207	24100	50000
0.75	1.5	4350	1.3	964.6	**BK70G20-../DHE08XA4**	207	24100	50000
0.75	1.3	5000	1.15	1139	**BK70G20-../DHE08XA4**	207	24100	50000
0.75	1.2	5500	1.05	1280	**BK70G20-../DHE08XA4**	207	24100	50000
0.75	1.0	6700	0.85	1457	**BK70G20-../DHE08XA4**	207	24100	50000
0.75	1.5	3850	3.0	963.0	**BK80G40-../DHE08XA4**	349	30000	75000
0.75	1.4	4100	2.8	1079	**BK80G40-../DHE08XA4**	349	30000	75000
0.75	1.1	5400	2.1	1307	**BK80G40-../DHE08XA4**	349	30000	75000
0.75	1.0	5900	1.95	1425	**BK80G40-../DHE08XA4**	349	30000	75000
0.75	0.9	6700	1.7	1583	**BK80G40-../DHE08XA4**	349	30000	75000
0.75	0.8	7600	1.5	1775	**BK80G40-../DHE08XA4**	349	30000	75000
0.75	0.65	9600	1.2	2205	**BK80G40-../DHE08XA4**	349	30000	75000

The torques marked (*) are maximum permissible torques for service factor f_B=1,0.

0.75 kW

P_N	50 Hz			i	Type	m		
	n_2	M_2	f_B					
[kW]	[1/min]	[Nm]	[—]	[:1]		[kg]	[N]	[N]
0.75	0.6	10400	1.1	2449	**BK80G40-../DHE08XA4**	349	30000	75000
0.75	0.9	6400	2.9	1579	**BK90G50-../DHE08XA4**	622	49400	120000
0.75	0.8	7200	2.6	1803	**BK90G50-../DHE08XA4**	622	49400	120000
0.75	0.75	7600	2.4	2016	**BK90G50-../DHE08XA4**	622	49400	120000
0.75	0.55	10900	1.7	2764	**BK90G50-../DHE08XA4**	622	49400	120000
0.75	0.47	13100	1.4	3065	**BK90G50-../DHE08XA4**	622	49400	120000
0.75	0.39	16200	1.15	3672	**BK90G50-../DHE08XA4**	622	49400	120000
0.75	0.35	18300	1.0	4070	**BK90G50-../DHE08XA4**	622	49400	120000

1.1 kW

P_N	50 Hz			i	Type	m		
	n_2	M_2	f_B					
[kW]	[1/min]	[Nm]	[—]	[:1]		[kg]	[N]	[N]
1.1	325	29.5	3.2	4.44	**BK10-../DHE09LA4**	36	1900	-
1.1	240	40	2.6	6.02	**BK10-../DHE09LA4**	36	2100	-
1.1	188	51	2.3	7.68	**BK10-../DHE09LA4**	36	2400	-
1.1	154	62	1.85	9.40	**BK10-../DHE09LA4**	36	2700	-
1.1	135	70	2.6	10.70	**BK10-../DHE09LA4**	36	3500	-
1.1	121	79	1.45	11.93	**BK10-../DHE09LA4**	36	3100	-
1.1	100	94	2.1	14.50	**BK10-../DHE09LA4**	36	3900	-
1.1	86	109	1.25	16.92	**BK10-../DHE09LA4**	36	3700	-
1.1	78	121	1.65	18.52	**BK10-../DHE09LA4**	36	4300	-
1.1	64	147	1.35	22.65	**BK10-../DHE09LA4**	36	4650	-
1.1	51	185	1.1	28.76	**BK10-../DHE09LA4**	36	5200	-
1.1	42.5	220	0.91	34.25	**BK10-../DHE09LA4**	36	5600	-
1.1	124	77	3.0	11.69	**BK20-../DHE09LA4**	46	2400	8800
1.1	83	115	2.0	17.42	**BK20-../DHE09LA4**	46	3250	9000
1.1	75	126	2.6	19.39	**BK20-../DHE09LA4**	46	4050	9000
1.1	60	157	2.1	24.29	**BK20-../DHE09LA4**	46	4500	9000
1.1	51	185	1.8	28.66	**BK20-../DHE09LA4**	46	4850	9000
1.1	39.5	235	1.4	36.69	**BK20-../DHE09LA4**	46	5400	9000
1.1	34	275	1.2	42.70	**BK20-../DHE09LA4**	46	5800	9000
1.1	28.5	325	1.0	51.22	**BK20-../DHE09LA4**	46	6300	9000
1.1	23.5	395	0.84	61.30	**BK20-../DHE09LA4**	46	6500	9000
1.1	70	136	2.4	20.85	**BK30-../DHE09LA4**	52	5000	12000
1.1	63	150	3.0	23.20	**BK30-../DHE09LA4**	52	5900	12000
1.1	51	185	2.4	28.76	**BK30-../DHE09LA4**	52	6500	12000
1.1	43	215	2.1	33.70	**BK30-../DHE09LA4**	52	7000	12000
1.1	34	270	1.65	42.89	**BK30-../DHE09LA4**	52	7800	12000
1.1	29	315	1.45	50.27	**BK30-../DHE09LA4**	52	8300	12000
1.1	24.5	375	1.2	59.27	**BK30-../DHE09LA4**	52	8900	12000
1.1	20.5	445	1.0	71.56	**BK30-../DHE09LA4**	52	9700	12000
1.1	16.5	540	0.83	88.38	**BK30-../DHE09LA4**	52	10600	12000
1.1	35.5	265	2.9	40.88	**BK40-../DHE09LA4**	72	7600	17000
1.1	28.5	320	2.4	51.18	**BK40-../DHE09LA4**	72	8400	17000
1.1	24.5	375	2.1	59.66	**BK40-../DHE09LA4**	72	9100	17000
1.1	21	435	1.8	70.11	**BK40-../DHE09LA4**	72	9800	17000
1.1	17.5	520	1.5	84.36	**BK40-../DHE09LA4**	72	10700	17000
1.1	14	630	1.25	104.0	**BK40-../DHE09LA4**	72	11700	17000
1.1	12.5	710	1.1	118.2	**BK40Z-../DHE09LA4**	76	11700	17000
1.1	10.5	840	0.93	143.0	**BK40Z-../DHE09LA4**	76	11700	17000
1.1	24	385	2.7	60.76	**BK50-../DHE09LA4**	100	11400	26000
1.1	19.5	465	2.3	75.40	**BK50-../DHE09LA4**	100	12600	26000
1.1	15.5	580	1.8	95.29	**BK50-../DHE09LA4**	100	14100	26000
1.1	12.5	710	1.5	115.4	**BK50Z-../DHE09LA4**	105	14100	26000
1.1	9.4	920	1.15	153.3	**BK50Z-../DHE09LA4**	105	14100	26000
1.1	7.0	1230	0.85	206.8	**BK50Z-../DHE09LA4**	105	14100	26000
1.1	14.5	720	3.2	101.2	**BK60-../DHE09LA4**	109	13900	34000
1.1	13	800	2.9	113.2	**BK60-../DHE09LA4**	109	15000	34000

The torques marked (*) are maximum permissible torques for service factor f_B=1,0.

1.1 kW

P_N	50 Hz			i	Type	m		
	n_2	M_2	f_B					
[kW]	[1/min]	[Nm]	[—]	[:1]		[kg]	[N]	[N]
1.1	12	870	2.6	122.5	**BK60-../DHE09LA4**	109	15500	34000
1.1	11	950	2.4	137.0	**BK60-../DHE09LA4**	109	16600	34000
1.1	9.4	1110	2.1	153.7	**BK60Z-../DHE09LA4**	128	16600	34000
1.1	7.9	1320	1.75	183.2	**BK60Z-../DHE09LA4**	128	16600	34000
1.1	7.1	1470	1.55	205.0	**BK60Z-../DHE09LA4**	128	16600	34000
1.1	6.1	1720	1.35	239.7	**BK60Z-../DHE09LA4**	128	16600	34000
1.1	5.4	1940	1.2	268.2	**BK60Z-../DHE09LA4**	128	16600	34000
1.1	4.6	2250	1.0	317.7	**BK60Z-../DHE09LA4**	128	16600	34000
1.1	4.1	2550	0.9	355.5	**BK60Z-../DHE09LA4**	128	16600	34000
1.1	6.4	1640	3.2	226.2	**BK70Z-../DHE09LA4**	216	24100	50000
1.1	5.6	1870	2.8	257.3	**BK70Z-../DHE09LA4**	216	24100	50000
1.1	5.0	2100	2.5	293.3	**BK70Z-../DHE09LA4**	216	24100	50000
1.1	4.4	2350	2.2	333.6	**BK70Z-../DHE09LA4**	216	24100	50000
1.1	3.8	2750	1.9	379.9	**BK70Z-../DHE09LA4**	216	24100	50000
1.1	3.4	3050	1.7	432.1	**BK70Z-../DHE09LA4**	216	24100	50000
1.1	2.9	3600	1.45	501.8	**BK70Z-../DHE09LA4**	216	24100	50000
1.1	2.6	4000	1.3	570.8	**BK70Z-../DHE09LA4**	216	24100	50000
1.1	2.3	4550	1.15	644.9	**BK70Z-../DHE09LA4**	216	24100	50000
1.1	2.0	5200	1.0	733.6	**BK70Z-../DHE09LA4**	216	24100	50000
1.1	1.7	5800	0.98	847.7	**BK70G20-../DHE09LA4**	214	24100	50000
1.1	1.5	6500	0.88	964.6	**BK70G20-../DHE09LA4**	214	24100	50000
1.1	2.9	3600	3.2	499.5	**BK80Z-../DHE09LA4**	345	30000	75000
1.1	2.6	4000	2.9	559.5	**BK80Z-../DHE09LA4**	345	30000	75000
1.1	2.4	3600	3.2	607.8	**BK80G40-../DHE09LA4**	356	30000	75000
1.1	2.2	3900	2.9	680.9	**BK80G40-../DHE09LA4**	356	30000	75000
1.1	2.0	4400	2.6	756.3	**BK80G40-../DHE09LA4**	356	30000	75000
1.1	1.7	5200	2.2	847.2	**BK80G40-../DHE09LA4**	356	30000	75000
1.1	1.5	6100	1.9	963.0	**BK80G40-../DHE09LA4**	356	30000	75000
1.1	1.4	6400	1.8	1079	**BK80G40-../DHE09LA4**	356	30000	75000
1.1	1.2	7700	1.5	1307	**BK80G40-../DHE09LA4**	356	30000	75000
1.1	1.1	8300	1.4	1425	**BK80G40-../DHE09LA4**	356	30000	75000
1.1	0.95	9800	1.15	1583	**BK80G40-../DHE09LA4**	356	30000	75000
1.1	0.85	11000	1.05	1775	**BK80G40-../DHE09LA4**	356	30000	75000
1.1	1.5	5600	3.3	1008	**BK90G50-../DHE09LA4**	629	49400	120000
1.1	1.3	6500	2.8	1127	**BK90G50-../DHE09LA4**	629	49400	120000
1.1	1.1	8300	2.2	1363	**BK90G50-../DHE09LA4**	629	49400	120000
1.1	0.95	9500	1.95	1579	**BK90G50-../DHE09LA4**	629	49400	120000
1.1	0.8	11400	1.6	1803	**BK90G50-../DHE09LA4**	629	49400	120000
1.1	0.75	12000	1.55	2016	**BK90G50-../DHE09LA4**	629	49400	120000

1.5 kW

P_N	50 Hz			i	Type	m		
	n_2	M_2	f_B					
[kW]	[1/min]	[Nm]	[—]	[:1]		[kg]	[N]	[N]
1.5	325	40.5	2.3	4.44	**BK10-../DHE09XA4**	40	1900	-
1.5	240	54	1.95	6.02	**BK10-../DHE09XA4**	40	2100	-
1.5	188	70	1.65	7.68	**BK10-../DHE09XA4**	40	2400	-
1.5	154	85	1.35	9.40	**BK10-../DHE09XA4**	40	2700	-
1.5	135	95	1.9	10.70	**BK10-../DHE09XA4**	40	3500	-
1.5	121	108	1.05	11.93	**BK10-../DHE09XA4**	40	3100	-
1.5	100	128	1.55	14.50	**BK10-../DHE09XA4**	40	3900	-
1.5	86	149	0.91	16.92	**BK10-../DHE09XA4**	40	3700	-
1.5	78	165	1.2	18.52	**BK10-../DHE09XA4**	40	4300	-
1.5	64	200	1.0	22.65	**BK10-../DHE09XA4**	40	4650	-
1.5	51	250	0.8	28.76	**BK10-../DHE09XA4**	40	5200	-
1.5	183	72	3.2	7.91	**BK20-../DHE09XA4**	50	1330	7600
1.5	146	90	2.6	9.91	**BK20-../DHE09XA4**	50	1910	8300
1.5	130	99	3.0	11.14	**BK20-../DHE09XA4**	50	3300	8100
1.5	124	106	2.2	11.69	**BK20-../DHE09XA4**	50	2400	8800
1.5	98	131	2.5	14.75	**BK20-../DHE09XA4**	50	3650	9000
1.5	83	157	1.45	17.42	**BK20-../DHE09XA4**	50	3250	9000

The torques marked (*) are maximum permissible torques for service factor f_B=1,0.

1.5 kW

P_N	50 Hz			i	Type	m		
	n_2	M_2	f_B					
[kW]	[1/min]	[Nm]	[—]	[:1]		[kg]	[N]	[N]
1.5	75	171	1.95	19.39	**BK20-../DHE09XA4**	50	4050	9000
1.5	60	210	1.55	24.29	**BK20-../DHE09XA4**	50	4500	9000
1.5	51	250	1.3	28.66	**BK20-../DHE09XA4**	50	4850	9000
1.5	39.5	325	1.0	36.69	**BK20-../DHE09XA4**	50	5400	9000
1.5	34	375	0.88	42.70	**BK20-../DHE09XA4**	50	5800	9000
1.5	121	108	3.0	11.93	**BK30-../DHE09XA4**	56	3650	12000
1.5	104	125	2.6	13.98	**BK30-../DHE09XA4**	56	4050	12000
1.5	81	159	2.8	17.95	**BK30-../DHE09XA4**	56	5300	12000
1.5	70	186	1.7	20.85	**BK30-../DHE09XA4**	56	5000	12000
1.5	63	200	2.3	23.20	**BK30-../DHE09XA4**	56	5900	12000
1.5	51	250	1.8	28.76	**BK30-../DHE09XA4**	56	6500	12000
1.5	43	295	1.55	33.70	**BK30-../DHE09XA4**	56	7000	12000
1.5	34	370	1.2	42.89	**BK30-../DHE09XA4**	56	7800	12000
1.5	29	430	1.05	50.27	**BK30-../DHE09XA4**	56	8300	12000
1.5	24.5	510	0.88	59.27	**BK30-../DHE09XA4**	56	8900	12000
1.5	51	250	3.1	28.59	**BK40-../DHE09XA4**	76	6300	17000
1.5	42	305	2.6	34.61	**BK40-../DHE09XA4**	76	6900	17000
1.5	35.5	360	2.2	40.88	**BK40-../DHE09XA4**	76	7600	17000
1.5	28.5	440	1.75	51.18	**BK40-../DHE09XA4**	76	8400	17000
1.5	24.5	510	1.55	59.66	**BK40-../DHE09XA4**	76	9100	17000
1.5	21	590	1.3	70.11	**BK40-../DHE09XA4**	76	9800	17000
1.5	17.5	710	1.1	84.36	**BK40-../DHE09XA4**	76	10700	17000
1.5	14	860	0.91	104.0	**BK40-../DHE09XA4**	76	11700	17000
1.5	12.5	970	0.8	118.2	**BK40Z-../DHE09XA4**	80	11700	17000
1.5	30.5	415	2.5	47.50	**BK50-../DHE09XA4**	104	10100	25700
1.5	24	520	2.0	60.76	**BK50-../DHE09XA4**	104	11400	26000
1.5	19.5	630	1.65	75.40	**BK50-../DHE09XA4**	104	12600	26000
1.5	15.5	790	1.35	95.29	**BK50-../DHE09XA4**	104	14100	26000
1.5	12.5	970	1.1	115.4	**BK50Z-../DHE09XA4**	109	14100	26000
1.5	9.4	1260	0.83	153.3	**BK50Z-../DHE09XA4**	109	14100	26000
1.5	18.5	770	3.0	78.13	**BK60-../DHE09XA4**	113	11900	34000
1.5	16.5	860	2.7	87.41	**BK60-../DHE09XA4**	113	12900	34000
1.5	14.5	980	2.3	101.2	**BK60-../DHE09XA4**	113	13900	34000
1.5	13	1100	2.1	113.2	**BK60-../DHE09XA4**	113	15000	34000
1.5	12	1190	1.95	122.5	**BK60-../DHE09XA4**	113	15500	34000
1.5	11	1300	1.75	137.0	**BK60-../DHE09XA4**	113	16600	34000
1.5	9.4	1520	1.5	153.7	**BK60Z-../DHE09XA4**	132	16600	34000
1.5	7.9	1810	1.25	183.2	**BK60Z-../DHE09XA4**	132	16600	34000
1.5	7.1	2000	1.15	205.0	**BK60Z-../DHE09XA4**	132	16600	34000
1.5	6.1	2300	1.0	239.7	**BK60Z-../DHE09XA4**	132	16600	34000
1.5	5.4	2650	0.87	268.2	**BK60Z-../DHE09XA4**	132	16600	34000
1.5	8.2	1740	3.0	175.7	**BK70-../DHE09XA4**	199	24100	50000
1.5	7.6	1880	2.8	190.4	**BK70Z-../DHE09XA4**	220	24100	50000
1.5	6.4	2200	2.4	226.2	**BK70Z-../DHE09XA4**	220	24100	50000
1.5	5.6	2550	2.0	257.3	**BK70Z-../DHE09XA4**	220	24100	50000
1.5	5.0	2850	1.8	293.3	**BK70Z-../DHE09XA4**	220	24100	50000
1.5	4.4	3250	1.6	333.6	**BK70Z-../DHE09XA4**	220	24100	50000
1.5	3.8	3750	1.4	379.9	**BK70Z-../DHE09XA4**	220	24100	50000
1.5	3.4	4200	1.25	432.1	**BK70Z-../DHE09XA4**	220	24100	50000
1.5	2.9	4900	1.05	501.8	**BK70Z-../DHE09XA4**	220	24100	50000
1.5	2.6	5500	0.95	570.8	**BK70Z-../DHE09XA4**	220	24100	50000
1.5	2.3	6200	0.84	644.9	**BK70Z-../DHE09XA4**	220	24100	50000
1.5	3.8	3750	3.1	389.0	**BK80Z-../DHE09XA4**	349	30000	75000
1.5	3.4	4200	2.7	435.7	**BK80Z-../DHE09XA4**	349	30000	75000
1.5	2.9	4900	2.3	499.5	**BK80Z-../DHE09XA4**	349	30000	75000
1.5	2.6	5500	2.1	559.5	**BK80Z-../DHE09XA4**	349	30000	75000
1.5	2.4	5200	2.2	607.8	**BK80G40-../DHE09XA4**	360	30000	75000
1.5	2.2	5600	2.1	680.9	**BK80G40-../DHE09XA4**	360	30000	75000
1.5	2.0	6300	1.85	756.3	**BK80G40-../DHE09XA4**	360	30000	75000
1.5	1.7	7500	1.55	847.2	**BK80G40-../DHE09XA4**	360	30000	75000
1.5	1.5	8600	1.35	963.0	**BK80G40-../DHE09XA4**	360	30000	75000
1.5	1.4	9200	1.25	1079	**BK80G40-../DHE09XA4**	360	30000	75000
1.5	1.2	10900	1.05	1307	**BK80G40-../DHE09XA4**	360	30000	75000
1.5	1.1	11800	0.97	1425	**BK80G40-../DHE09XA4**	360	30000	75000

The torques marked (*) are maximum permissible torques for service factor f_B=1,0.

1.5 kW

P_N	50 Hz			i	Type	m		
	n_2	M_2	f_B					
[kW]	[1/min]	[Nm]	[—]	[:1]		[kg]	[N]	[N]
1.5	2.3	6200	3.0	637.7	**BK90Z-../DHE09XA4**	622	49400	120000
1.5	2.1	6800	2.7	713.5	**BK90Z-../DHE09XA4**	622	49400	120000
1.5	1.8	6600	2.8	821.0	**BK90G50-../DHE09XA4**	633	49400	120000
1.5	1.7	7200	2.6	882.3	**BK90G50-../DHE09XA4**	633	49400	120000
1.5	1.5	8200	2.3	1008	**BK90G50-../DHE09XA4**	633	49400	120000
1.5	1.3	9500	1.95	1127	**BK90G50-../DHE09XA4**	633	49400	120000
1.5	1.1	11800	1.55	1363	**BK90G50-../DHE09XA4**	633	49400	120000
1.5	0.95	13500	1.35	1579	**BK90G50-../DHE09XA4**	633	49400	120000
1.5	0.8	16100	1.15	1803	**BK90G50-../DHE09XA4**	633	49400	120000
1.5	0.75	17100	1.1	2016	**BK90G50-../DHE09XA4**	633	49400	120000

2.2 kW

P_N	50 Hz			i	Type	m		
	n_2	M_2	f_B					
[kW]	[1/min]	[Nm]	[—]	[:1]		[kg]	[N]	[N]
2.2	325	59	1.6	4.44	**BK10-../DHE09XA4C**	43	1900	-
2.2	240	80	1.3	6.02	**BK10-../DHE09XA4C**	43	2100	-
2.2	188	102	1.15	7.68	**BK10-../DHE09XA4C**	43	2400	-
2.2	154	125	0.92	9.40	**BK10-../DHE09XA4C**	43	2700	-
2.2	135	140	1.3	10.70	**BK10-../DHE09XA4C**	43	3500	-
2.2	100	189	1.05	14.50	**BK10-../DHE09XA4C**	43	3900	-
2.2	78	240	0.83	18.52	**BK10-../DHE09XA4C**	43	4300	-
2.2	320	60	3.3	4.54	**BK20-../DHE09XA4C**	52	520	6100
2.2	240	80	2.7	6.02	**BK20-../DHE09XA4C**	52	580	6800
2.2	183	105	2.2	7.91	**BK20-../DHE09XA4C**	52	1330	7600
2.2	146	132	1.75	9.91	**BK20-../DHE09XA4C**	52	1910	8300
2.2	130	145	2.1	11.14	**BK20-../DHE09XA4C**	52	3300	8100
2.2	124	155	1.5	11.69	**BK20-../DHE09XA4C**	52	2400	8800
2.2	98	192	1.7	14.75	**BK20-../DHE09XA4C**	52	3650	9000
2.2	83	230	1.0	17.42	**BK20-../DHE09XA4C**	52	3250	9000
2.2	75	250	1.3	19.39	**BK20-../DHE09XA4C**	52	4050	9000
2.2	60	315	1.05	24.29	**BK20-../DHE09XA4C**	52	4500	9000
2.2	51	370	0.89	28.66	**BK20-../DHE09XA4C**	52	4850	9000
2.2	305	63	3.1	4.73	**BK30-../DHE09XA4C**	58	1550	8800
2.2	240	80	2.7	6.02	**BK30-../DHE09XA4C**	58	1690	9600
2.2	194	99	2.7	7.45	**BK30-../DHE09XA4C**	58	2200	10400
2.2	150	128	2.5	9.63	**BK30-../DHE09XA4C**	58	3150	11500
2.2	127	148	2.8	11.39	**BK30-../DHE09XA4C**	58	4150	11000
2.2	121	159	2.0	11.93	**BK30-../DHE09XA4C**	58	3650	12000
2.2	104	183	1.75	13.98	**BK30-../DHE09XA4C**	58	4050	12000
2.2	100	189	2.4	14.50	**BK30-../DHE09XA4C**	58	4900	12000
2.2	81	230	1.95	17.95	**BK30-../DHE09XA4C**	58	5300	12000
2.2	70	270	1.2	20.85	**BK30-../DHE09XA4C**	58	5000	12000
2.2	63	300	1.5	23.20	**BK30-../DHE09XA4C**	58	5900	12000
2.2	51	370	1.2	28.76	**BK30-../DHE09XA4C**	58	6500	12000
2.2	43	435	1.05	33.70	**BK30-../DHE09XA4C**	58	7000	12000
2.2	34	540	0.83	42.89	**BK30-../DHE09XA4C**	58	7800	12000
2.2	122	158	3.1	11.86	**BK40-../DHE09XA4C**	79	1770	12200
2.2	80	235	3.3	18.05	**BK40-../DHE09XA4C**	79	4900	15300
2.2	65	290	2.7	22.44	**BK40-../DHE09XA4C**	79	5500	16500
2.2	51	370	2.1	28.59	**BK40-../DHE09XA4C**	79	6300	17000
2.2	42	450	1.75	34.61	**BK40-../DHE09XA4C**	79	6900	17000
2.2	35.5	530	1.45	40.88	**BK40-../DHE09XA4C**	79	7600	17000
2.2	28.5	640	1.2	51.18	**BK40-../DHE09XA4C**	79	8400	17000
2.2	24.5	750	1.05	59.66	**BK40-../DHE09XA4C**	79	9100	17000
2.2	21	870	0.9	70.11	**BK40-../DHE09XA4C**	79	9800	17000
2.2	81	235	3.1	17.92	**BK50-../DHE09XA4C**	107	4600	16800
2.2	55	340	3.1	26.51	**BK50-../DHE09XA4C**	107	7800	21200
2.2	41	460	2.3	35.21	**BK50-../DHE09XA4C**	107	8700	23100
2.2	30.5	610	1.7	47.50	**BK50-../DHE09XA4C**	107	10100	25700
2.2	24	770	1.35	60.76	**BK50-../DHE09XA4C**	107	11400	26000

The torques marked (*) are maximum permissible torques for service factor f_B=1,0.

2.2 kW

P_N	50 Hz			i	Type	m		
	n_2	M_2	f_B					
[kW]	[1/min]	[Nm]	[—]	[:1]		[kg]	[N]	[N]
2.2	19.5	930	1.15	75.40	**BK50-../DHE09XA4C**	107	12600	26000
2.2	15.5	1160	0.91	95.29	**BK50-../DHE09XA4C**	107	14100	26000
2.2	29	720	3.2	50.40	**BK60-../DHE09XA4C**	115	9100	29800
2.2	24.5	850	2.7	58.95	**BK60-../DHE09XA4C**	115	9900	31500
2.2	22	950	2.4	65.95	**BK60-../DHE09XA4C**	115	10900	33000
2.2	18.5	1130	2.0	78.13	**BK60-../DHE09XA4C**	115	11900	34000
2.2	16.5	1270	1.8	87.41	**BK60-../DHE09XA4C**	115	12900	34000
2.2	14.5	1440	1.6	101.2	**BK60-../DHE09XA4C**	115	13900	34000
2.2	13	1610	1.45	113.2	**BK60-../DHE09XA4C**	115	15000	34000
2.2	12	1750	1.3	122.5	**BK60-../DHE09XA4C**	115	15500	34000
2.2	11	1910	1.2	137.0	**BK60-../DHE09XA4C**	115	16600	34000
2.2	9.4	2200	1.05	153.7	**BK60Z-../DHE09XA4C**	135	16600	34000
2.2	7.9	2650	0.87	183.2	**BK60Z-../DHE09XA4C**	135	16600	34000
2.2	12	1750	3.0	120.2	**BK70-../DHE09XA4C**	202	18600	50000
2.2	11	1910	2.7	136.7	**BK70-../DHE09XA4C**	202	20700	50000
2.2	9.4	2200	2.4	154.4	**BK70-../DHE09XA4C**	202	21900	50000
2.2	8.2	2550	2.0	175.7	**BK70-../DHE09XA4C**	202	24100	50000
2.2	7.6	2750	1.9	190.4	**BK70Z-../DHE09XA4C**	223	24100	50000
2.2	6.4	3250	1.6	226.2	**BK70Z-../DHE09XA4C**	223	24100	50000
2.2	5.6	3750	1.4	257.3	**BK70Z-../DHE09XA4C**	223	24100	50000
2.2	5.0	4200	1.25	293.3	**BK70Z-../DHE09XA4C**	223	24100	50000
2.2	4.4	4750	1.1	333.6	**BK70Z-../DHE09XA4C**	223	24100	50000
2.2	3.8	5500	0.95	379.9	**BK70Z-../DHE09XA4C**	223	24100	50000
2.2	3.4	6100	0.85	432.1	**BK70Z-../DHE09XA4C**	223	24100	50000
2.2	5.7	3650	3.2	253.3	**BK80Z-../DHE09XA4C**	351	30000	75000
2.2	4.8	4350	2.6	300.6	**BK80Z-../DHE09XA4C**	351	30000	75000
2.2	4.3	4850	2.4	336.7	**BK80Z-../DHE09XA4C**	351	30000	75000
2.2	3.8	5500	2.1	389.0	**BK80Z-../DHE09XA4C**	351	30000	75000
2.2	3.4	6100	1.9	435.7	**BK80Z-../DHE09XA4C**	351	30000	75000
2.2	2.9	7200	1.6	499.5	**BK80Z-../DHE09XA4C**	351	30000	75000
2.2	2.6	8000	1.45	559.5	**BK80Z-../DHE09XA4C**	351	30000	75000
2.2	2.4	8000	1.45	607.8	**BK80G40-../DHE09XA4C**	363	30000	75000
2.2	2.2	8700	1.3	680.9	**BK80G40-../DHE09XA4C**	363	30000	75000
2.2	2.0	9600	1.2	756.3	**BK80G40-../DHE09XA4C**	363	30000	75000
2.2	1.7	11400	1.0	847.2	**BK80G40-../DHE09XA4C**	363	30000	75000
2.2	1.5	13100	0.88	963.0	**BK80G40-../DHE09XA4C**	363	30000	75000
2.2	1.4	13900	0.83	1079	**BK80G40-../DHE09XA4C**	363	30000	75000
2.2	3.4	6100	3.0	435.3	**BK90Z-../DHE09XA4C**	624	49400	120000
2.2	2.9	7200	2.6	499.2	**BK90Z-../DHE09XA4C**	624	49400	120000
2.2	2.6	8000	2.3	558.5	**BK90Z-../DHE09XA4C**	624	49400	120000
2.2	2.3	9100	2.0	637.7	**BK90Z-../DHE09XA4C**	624	49400	120000
2.2	2.1	10000	1.85	713.5	**BK90Z-../DHE09XA4C**	624	49400	120000
2.2	1.8	10300	1.8	821.0	**BK90G50-../DHE09XA4C**	635	49400	120000
2.2	1.7	11100	1.65	882.3	**BK90G50-../DHE09XA4C**	635	49400	120000
2.2	1.5	12600	1.45	1008	**BK90G50-../DHE09XA4C**	635	49400	120000
2.2	1.3	14600	1.25	1127	**BK90G50-../DHE09XA4C**	635	49400	120000
2.2	1.1	17800	1.05	1363	**BK90G50-../DHE09XA4C**	635	49400	120000

3 kW

P_N	50 Hz			i	Type	m		
	n_2	M_2	f_B					
[kW]	[1/min]	[Nm]	[—]	[:1]		[kg]	[N]	[N]
3	305	86	2.3	4.73	**BK30-../DHE11MA4**	65	1550	8800
3	240	109	1.95	6.02	**BK30-../DHE11MA4**	65	1690	9600
3	194	135	2.0	7.45	**BK30-../DHE11MA4**	65	2200	10400
3	150	175	1.85	9.63	**BK30-../DHE11MA4**	65	3150	11500
3	127	200	2.1	11.39	**BK30-../DHE11MA4**	65	4150	11000
3	121	215	1.5	11.93	**BK30-../DHE11MA4**	65	3650	12000
3	104	250	1.3	13.98	**BK30-../DHE11MA4**	65	4050	12000
3	100	255	1.75	14.50	**BK30-../DHE11MA4**	65	4900	12000
3	81	315	1.45	17.95	**BK30-../DHE11MA4**	65	5300	12000

The torques marked (*) are maximum permissible torques for service factor f_B=1,0.

3 kW

P_N	50 Hz			i	Type	m		
	n_2	M_2	f_B					
[kW]	[1/min]	[Nm]	[—]	[:1]		[kg]	[N]	[N]
3	63	405	1.1	23.20	**BK30-../DHE11MA4**	65	5900	12000
3	51	500	0.9	28.76	**BK30-../DHE11MA4**	65	6500	12000
3	155	170	2.9	9.31	**BK40-../DHE11MA4**	90	1040	11200
3	122	215	2.3	11.86	**BK40-../DHE11MA4**	90	1770	12200
3	100	255	3.1	14.50	**BK40-../DHE11MA4**	90	4500	14300
3	80	320	2.4	18.05	**BK40-../DHE11MA4**	90	4900	15300
3	65	395	1.95	22.44	**BK40-../DHE11MA4**	90	5500	16500
3	51	500	1.55	28.59	**BK40-../DHE11MA4**	90	6300	17000
3	42	610	1.3	34.61	**BK40-../DHE11MA4**	90	6900	17000
3	35.5	720	1.1	40.88	**BK40-../DHE11MA4**	90	7600	17000
3	81	320	2.3	17.92	**BK50-../DHE11MA4**	120	4600	16800
3	75	340	3.1	19.33	**BK50-../DHE11MA4**	120	6900	19200
3	55	465	2.3	26.51	**BK50-../DHE11MA4**	120	7800	21200
3	41	620	1.7	35.21	**BK50-../DHE11MA4**	120	8700	23100
3	30.5	830	1.25	47.50	**BK50-../DHE11MA4**	120	10100	25700
3	24	1050	1.0	60.76	**BK50-../DHE11MA4**	120	11400	26000
3	19.5	1270	0.83	75.40	**BK50-../DHE11MA4**	120	12600	26000
3	38.5	740	3.1	37.80	**BK60-../DHE11MA4**	130	7300	26500
3	32	890	2.6	45.05	**BK60-../DHE11MA4**	130	8200	28300
3	29	980	2.3	50.40	**BK60-../DHE11MA4**	130	9100	29800
3	24.5	1160	2.0	58.95	**BK60-../DHE11MA4**	130	9900	31500
3	22	1300	1.75	65.95	**BK60-../DHE11MA4**	130	10900	33000
3	18.5	1540	1.5	78.13	**BK60-../DHE11MA4**	130	11900	34000
3	16.5	1730	1.35	87.41	**BK60-../DHE11MA4**	130	12900	34000
3	14.5	1970	1.15	101.2	**BK60-../DHE11MA4**	130	13900	34000
3	13	2200	1.05	113.2	**BK60-../DHE11MA4**	130	15000	34000
3	12	2350	0.98	122.5	**BK60-../DHE11MA4**	130	15500	34000
3	11	2600	0.88	137.0	**BK60-../DHE11MA4**	130	16600	34000
3	16	1790	2.9	90.96	**BK70-../DHE11MA4**	209	15300	49900
3	14	2000	2.6	103.5	**BK70-../DHE11MA4**	209	17200	50000
3	12	2350	2.2	120.2	**BK70-../DHE11MA4**	209	18600	50000
3	11	2600	2.0	136.7	**BK70-../DHE11MA4**	209	20700	50000
3	9.4	3000	1.75	154.4	**BK70-../DHE11MA4**	209	21900	50000
3	8.2	3450	1.5	175.7	**BK70-../DHE11MA4**	209	24100	50000
3	7.6	3750	1.4	190.4	**BK70Z-../DHE11MA4**	236	24100	50000
3	6.4	4450	1.15	226.2	**BK70Z-../DHE11MA4**	236	24100	50000
3	5.6	5100	1.0	257.3	**BK70Z-../DHE11MA4**	236	24100	50000
3	5.0	5700	0.91	293.3	**BK70Z-../DHE11MA4**	236	24100	50000
3	4.4	6500	0.8	333.6	**BK70Z-../DHE11MA4**	236	24100	50000
3	8.4	3400	3.1	171.5	**BK80-../DHE11MA4**	324	30000	75000
3	8.2	3450	3.3	177.6	**BK80Z-../DHE11MA4**	366	30000	75000
3	7.3	3900	2.9	198.9	**BK80Z-../DHE11MA4**	366	30000	75000
3	6.4	4450	2.6	226.1	**BK80Z-../DHE11MA4**	366	30000	75000
3	5.7	5000	2.3	253.3	**BK80Z-../DHE11MA4**	366	30000	75000
3	4.8	5900	1.95	300.6	**BK80Z-../DHE11MA4**	366	30000	75000
3	4.3	6600	1.75	336.7	**BK80Z-../DHE11MA4**	366	30000	75000
3	3.8	7500	1.55	389.0	**BK80Z-../DHE11MA4**	366	30000	75000
3	3.4	8400	1.35	435.7	**BK80Z-../DHE11MA4**	366	30000	75000
3	2.9	9800	1.15	499.5	**BK80Z-../DHE11MA4**	366	30000	75000
3	2.6	11000	1.05	559.5	**BK80Z-../DHE11MA4**	366	30000	75000
3	2.4	11100	1.05	607.8	**BK80G40-../DHE11MA4**	374	30000	75000
3	2.2	12100	0.95	680.9	**BK80G40-../DHE11MA4**	374	30000	75000
3	2.0	13500	0.85	756.3	**BK80G40-../DHE11MA4**	374	30000	75000
3	4.9	5800	3.2	295.6	**BK90Z-../DHE11MA4**	632	49400	120000
3	4.4	6500	2.8	330.7	**BK90Z-../DHE11MA4**	632	49400	120000
3	3.8	7500	2.5	389.1	**BK90Z-../DHE11MA4**	632	49400	120000
3	3.4	8400	2.2	435.3	**BK90Z-../DHE11MA4**	632	49400	120000
3	2.9	9800	1.9	499.2	**BK90Z-../DHE11MA4**	632	49400	120000
3	2.6	11000	1.7	558.5	**BK90Z-../DHE11MA4**	632	49400	120000
3	2.3	12400	1.5	637.7	**BK90Z-../DHE11MA4**	632	49400	120000
3	2.1	13600	1.35	713.5	**BK90Z-../DHE11MA4**	632	49400	120000
3	1.8	14500	1.3	821.0	**BK90G50-../DHE11MA4**	648	49400	120000
3	1.7	15600	1.2	882.3	**BK90G50-../DHE11MA4**	648	49400	120000
3	1.5	17700	1.05	1008	**BK90G50-../DHE11MA4**	648	49400	120000

The torques marked (*) are maximum permissible torques for service factor f_B=1,0.

3 kW

P_N	50 Hz			i	**Type**	m		
	n_2	M_2	f_B					
[kW]	[1/min]	[Nm]	[—]	[:1]		[kg]	[N]	[N]
3	1.3	20500	0.9	1127	**BK90G50-../DHE11MA4**	648	49400	120000

4 kW

P_N	50 Hz			i	**Type**	m		
	n_2	M_2	f_B					
[kW]	[1/min]	[Nm]	[—]	[:1]		[kg]	[N]	[N]
4	305	115	1.7	4.73	**BK30-../DHE11LA4**	76	1550	8800
4	240	146	1.45	6.02	**BK30-../DHE11LA4**	76	1690	9600
4	194	181	1.5	7.45	**BK30-../DHE11LA4**	76	2200	10400
4	150	230	1.4	9.63	**BK30-../DHE11LA4**	76	3150	11500
4	127	270	1.55	11.39	**BK30-../DHE11LA4**	76	4150	11000
4	121	290	1.1	11.93	**BK30-../DHE11LA4**	76	3650	12000
4	104	330	0.97	13.98	**BK30-../DHE11LA4**	76	4050	12000
4	100	340	1.3	14.50	**BK30-../DHE11LA4**	76	4900	12000
4	81	420	1.05	17.95	**BK30-../DHE11LA4**	76	5300	12000
4	63	540	0.83	23.20	**BK30-../DHE11LA4**	76	5900	12000
4	240	146	3.2	6.02	**BK40-../DHE11LA4**	102	470	9800
4	193	182	2.7	7.49	**BK40-../DHE11LA4**	102	750	10500
4	155	225	2.2	9.31	**BK40-../DHE11LA4**	102	1040	11200
4	129	265	2.7	11.17	**BK40-../DHE11LA4**	102	4100	13100
4	122	285	1.75	11.86	**BK40-../DHE11LA4**	102	1770	12200
4	100	340	2.3	14.50	**BK40-../DHE11LA4**	102	4500	14300
4	80	425	1.85	18.05	**BK40-../DHE11LA4**	102	4900	15300
4	65	520	1.5	22.44	**BK40-../DHE11LA4**	102	5500	16500
4	51	670	1.15	28.59	**BK40-../DHE11LA4**	102	6300	17000
4	42	810	0.96	34.61	**BK40-../DHE11LA4**	102	6900	17000
4	35.5	960	0.81	40.88	**BK40-../DHE11LA4**	102	7600	17000
4	104	330	3.2	13.95	**BK50-../DHE11LA4**	132	6100	17400
4	95	360	2.9	15.19	**BK50-../DHE11LA4**	132	6300	18000
4	81	425	1.7	17.92	**BK50-../DHE11LA4**	132	4600	16800
4	75	455	2.3	19.33	**BK50-../DHE11LA4**	132	6900	19200
4	55	620	1.7	26.51	**BK50-../DHE11LA4**	132	7800	21200
4	41	830	1.25	35.21	**BK50-../DHE11LA4**	132	8700	23100
4	30.5	1110	0.95	47.50	**BK50-../DHE11LA4**	132	10100	25700
4	53	720	3.2	27.36	**BK60-../DHE11LA4**	142	5600	23200
4	43	880	2.6	33.78	**BK60-../DHE11LA4**	142	6500	25200
4	38.5	990	2.3	37.80	**BK60-../DHE11LA4**	142	7300	26500
4	32	1190	1.95	45.05	**BK60-../DHE11LA4**	142	8200	28300
4	29	1310	1.75	50.40	**BK60-../DHE11LA4**	142	9100	29800
4	24.5	1550	1.5	58.95	**BK60-../DHE11LA4**	142	9900	31500
4	22	1730	1.35	65.95	**BK60-../DHE11LA4**	142	10900	33000
4	18.5	2050	1.1	78.13	**BK60-../DHE11LA4**	142	11900	34000
4	16.5	2300	1.0	87.41	**BK60-../DHE11LA4**	142	12900	34000
4	14.5	2600	0.88	101.2	**BK60-../DHE11LA4**	142	13900	34000
4	23.5	1620	3.2	61.60	**BK70-../DHE11LA4**	221	11500	42800
4	21	1810	2.9	70.23	**BK70-../DHE11LA4**	221	12500	44800
4	18.5	2050	2.5	79.89	**BK70-../DHE11LA4**	221	14300	47600
4	16	2350	2.2	90.96	**BK70-../DHE11LA4**	221	15300	49900
4	14	2700	1.95	103.5	**BK70-../DHE11LA4**	221	17200	50000
4	12	3150	1.65	120.2	**BK70-../DHE11LA4**	221	18600	50000
4	11	3450	1.5	136.7	**BK70-../DHE11LA4**	221	20700	50000
4	9.4	4050	1.3	154.4	**BK70-../DHE11LA4**	221	21900	50000
4	8.2	4650	1.1	175.7	**BK70-../DHE11LA4**	221	24100	50000
4	7.6	5000	1.05	190.4	**BK70Z-../DHE11LA4**	247	24100	50000
4	6.4	5900	0.88	226.2	**BK70Z-../DHE11LA4**	247	24100	50000
4	11	3450	3.0	131.6	**BK80-../DHE11LA4**	336	24900	75000
4	9.5	4000	2.6	153.1	**BK80-../DHE11LA4**	336	27200	75000
4	8.4	4500	2.3	171.5	**BK80-../DHE11LA4**	336	30000	75000
4	8.2	4650	2.5	177.6	**BK80Z-../DHE11LA4**	378	30000	75000
4	7.3	5200	2.2	198.9	**BK80Z-../DHE11LA4**	378	30000	75000

The torques marked (*) are maximum permissible torques for service factor f_B=1,0.

4 kW

P_N	50 Hz			i	Type	m		
	n_2	M_2	f_B					
[kW]	[1/min]	[Nm]	[—]	[:1]		[kg]	[N]	[N]
4	6.4	5900	1.95	226.1	**BK80Z-../DHE11LA4**	378	30000	75000
4	5.7	6700	1.7	253.3	**BK80Z-../DHE11LA4**	378	30000	75000
4	4.8	7900	1.45	300.6	**BK80Z-../DHE11LA4**	378	30000	75000
4	4.3	8800	1.3	336.7	**BK80Z-../DHE11LA4**	378	30000	75000
4	3.8	10000	1.15	389.0	**BK80Z-../DHE11LA4**	378	30000	75000
4	3.4	11200	1.05	435.7	**BK80Z-../DHE11LA4**	378	30000	75000
4	2.9	13100	0.88	499.5	**BK80Z-../DHE11LA4**	378	30000	75000
4	6.2	6100	3.0	234.6	**BK90Z-../DHE11LA4**	643	49400	120000
4	5.5	6900	2.7	262.5	**BK90Z-../DHE11LA4**	643	49400	120000
4	4.9	7700	2.4	295.6	**BK90Z-../DHE11LA4**	643	49400	120000
4	4.4	8600	2.2	330.7	**BK90Z-../DHE11LA4**	643	49400	120000
4	3.8	10000	1.85	389.1	**BK90Z-../DHE11LA4**	643	49400	120000
4	3.4	11200	1.65	435.3	**BK90Z-../DHE11LA4**	643	49400	120000
4	2.9	13100	1.4	499.2	**BK90Z-../DHE11LA4**	643	49400	120000
4	2.6	14600	1.25	558.5	**BK90Z-../DHE11LA4**	643	49400	120000
4	2.3	16600	1.1	637.7	**BK90Z-../DHE11LA4**	643	49400	120000
4	2.1	18100	1.0	713.5	**BK90Z-../DHE11LA4**	643	49400	120000
4	1.8	19800	0.93	821.0	**BK90G50-../DHE11LA4**	660	49400	120000
4	1.7	21200	0.87	882.3	**BK90G50-../DHE11LA4**	660	49400	120000

5.5 kW

P_N	50 Hz			i	Type	m		
	n_2	M_2	f_B					
[kW]	[1/min]	[Nm]	[—]	[:1]		[kg]	[N]	[N]
5.5	310	155	1.25	4.73	**BK30-../DHE11LA4C**	80	1550	8800
5.5	245	197	1.1	6.02	**BK30-../DHE11LA4C**	80	1690	9600
5.5	196	245	1.1	7.45	**BK30-../DHE11LA4C**	80	2200	10400
5.5	152	315	1.0	9.63	**BK30-../DHE11LA4C**	80	3150	11500
5.5	129	365	1.15	11.39	**BK30-../DHE11LA4C**	80	4150	11000
5.5	123	390	0.82	11.93	**BK30-../DHE11LA4C**	80	3650	12000
5.5	101	465	0.97	14.50	**BK30-../DHE11LA4C**	80	4900	12000
5.5	320	151	2.9	4.63	**BK40-../DHE11LA4C**	106	430	8900
5.5	245	197	2.4	6.02	**BK40-../DHE11LA4C**	106	470	9800
5.5	195	245	2.0	7.49	**BK40-../DHE11LA4C**	106	750	10500
5.5	157	305	1.6	9.31	**BK40-../DHE11LA4C**	106	1040	11200
5.5	131	360	2.0	11.17	**BK40-../DHE11LA4C**	106	4100	13100
5.5	124	385	1.3	11.86	**BK40-../DHE11LA4C**	106	1770	12200
5.5	101	465	1.7	14.50	**BK40-../DHE11LA4C**	106	4500	14300
5.5	81	580	1.35	18.05	**BK40-../DHE11LA4C**	106	4900	15300
5.5	66	710	1.1	22.44	**BK40-../DHE11LA4C**	106	5500	16500
5.5	52	900	0.87	28.59	**BK40-../DHE11LA4C**	106	6300	17000
5.5	151	310	3.0	9.73	**BK50-../DHE11LA4C**	136	5400	15400
5.5	146	330	2.5	10.00	**BK50-../DHE11LA4C**	136	1220	13200
5.5	105	450	2.3	13.95	**BK50-../DHE11LA4C**	136	6100	17400
5.5	97	485	2.2	15.19	**BK50-../DHE11LA4C**	136	6300	18000
5.5	82	580	1.25	17.92	**BK50-../DHE11LA4C**	136	4600	16800
5.5	76	620	1.7	19.33	**BK50-../DHE11LA4C**	136	6900	19200
5.5	56	840	1.25	26.51	**BK50-../DHE11LA4C**	136	7800	21200
5.5	41.5	1130	0.93	35.21	**BK50-../DHE11LA4C**	136	8700	23100
5.5	72	720	3.1	20.54	**BK60-../DHE11LA4C**	146	4400	20600
5.5	60	870	2.6	24.45	**BK60-../DHE11LA4C**	146	4850	22000
5.5	54	970	2.4	27.36	**BK60-../DHE11LA4C**	146	5600	23200
5.5	43.5	1200	1.9	33.78	**BK60-../DHE11LA4C**	146	6500	25200
5.5	39	1340	1.7	37.80	**BK60-../DHE11LA4C**	146	7300	26500
5.5	32.5	1610	1.45	45.05	**BK60-../DHE11LA4C**	146	8200	28300
5.5	29	1810	1.25	50.40	**BK60-../DHE11LA4C**	146	9100	29800
5.5	25	2100	1.1	58.95	**BK60-../DHE11LA4C**	146	9900	31500
5.5	22.5	2300	1.0	65.95	**BK60-../DHE11LA4C**	146	10900	33000
5.5	19	2750	0.84	78.13	**BK60-../DHE11LA4C**	146	11900	34000
5.5	32.5	1610	3.2	45.59	**BK70-../DHE11LA4C**	225	9000	37900

The torques marked (*) are maximum permissible torques for service factor f_B=1,0.

5.5 kW

P_N	50 Hz			i	Type	m		
	n_2	M_2	f_B					
[kW]	[1/min]	[Nm]	[—]	[:1]		[kg]	[N]	[N]
5.5	27	1940	2.7	54.15	**BK70-../DHE11LA4C**	225	9900	40200
5.5	24	2150	2.4	61.60	**BK70-../DHE11LA4C**	225	11500	42800
5.5	21	2500	2.1	70.23	**BK70-../DHE11LA4C**	225	12500	44800
5.5	18.5	2800	1.85	79.89	**BK70-../DHE11LA4C**	225	14300	47600
5.5	16.5	3150	1.65	90.96	**BK70-../DHE11LA4C**	225	15300	49900
5.5	14.5	3600	1.45	103.5	**BK70-../DHE11LA4C**	225	17200	50000
5.5	12.5	4200	1.25	120.2	**BK70-../DHE11LA4C**	225	18600	50000
5.5	11	4750	1.1	136.7	**BK70-../DHE11LA4C**	225	20700	50000
5.5	9.5	5500	0.95	154.4	**BK70-../DHE11LA4C**	225	21900	50000
5.5	8.4	6200	0.84	175.7	**BK70-../DHE11LA4C**	225	24100	50000
5.5	16	3250	3.2	91.53	**BK80-../DHE11LA4C**	340	18300	74200
5.5	14.5	3600	2.9	102.5	**BK80-../DHE11LA4C**	340	20500	75000
5.5	12.5	4200	2.5	117.5	**BK80-../DHE11LA4C**	340	22300	75000
5.5	11.5	4550	2.3	131.6	**BK80-../DHE11LA4C**	340	24900	75000
5.5	9.6	5400	1.95	153.1	**BK80-../DHE11LA4C**	340	27200	75000
5.5	8.6	6100	1.7	171.5	**BK80-../DHE11LA4C**	340	30000	75000
5.5	8.3	6300	1.85	177.6	**BK80Z-../DHE11LA4C**	382	30000	75000
5.5	7.4	7000	1.65	198.9	**BK80Z-../DHE11LA4C**	382	30000	75000
5.5	6.5	8000	1.45	226.1	**BK80Z-../DHE11LA4C**	382	30000	75000
5.5	5.8	9000	1.3	253.3	**BK80Z-../DHE11LA4C**	382	30000	75000
5.5	4.9	10700	1.05	300.6	**BK80Z-../DHE11LA4C**	382	30000	75000
5.5	4.4	11900	0.97	336.7	**BK80Z-../DHE11LA4C**	382	30000	75000
5.5	3.8	13800	0.83	389.0	**BK80Z-../DHE11LA4C**	382	30000	75000
5.5	8.4	6200	3.0	174.7	**BK90Z-../DHE11LA4C**	647	49400	120000
5.5	7.5	7000	2.6	195.4	**BK90Z-../DHE11LA4C**	647	49400	120000
5.5	6.3	8300	2.2	234.6	**BK90Z-../DHE11LA4C**	647	49400	120000
5.5	5.6	9300	2.0	262.5	**BK90Z-../DHE11LA4C**	647	49400	120000
5.5	5.0	10500	1.75	295.6	**BK90Z-../DHE11LA4C**	647	49400	120000
5.5	4.5	11600	1.6	330.7	**BK90Z-../DHE11LA4C**	647	49400	120000
5.5	3.8	13800	1.35	389.1	**BK90Z-../DHE11LA4C**	647	49400	120000
5.5	3.4	15400	1.2	435.3	**BK90Z-../DHE11LA4C**	647	49400	120000
5.5	3.0	17500	1.05	499.2	**BK90Z-../DHE11LA4C**	647	49400	120000
5.5	2.7	19400	0.95	558.5	**BK90Z-../DHE11LA4C**	647	49400	120000
5.5	2.3	22800	0.81	637.7	**BK90Z-../DHE11LA4C**	647	49400	120000

7.5 kW

P_N	50 Hz			i	Type	m		
	n_2	M_2	f_B					
[kW]	[1/min]	[Nm]	[—]	[:1]		[kg]	[N]	[N]
7.5	400	164	4.4	3.67	**BK50-../DHE13LA4**	146	115	9400
7.5	280	235	3.5	5.26	**BK50-../DHE13LA4**	146	130	10700
7.5	205	320	2.5	7.29	**BK50-../DHE13LA4**	146	620	111000
7.5	151	425	2.2	9.73	**BK50-../DHE13LA4**	146	5400	15400
7.5	146	450	1.8	10.00	**BK50-../DHE13LA4**	146	1220	13200
7.5	105	610	1.7	13.95	**BK50-../DHE13LA4**	146	6100	17400
7.5	97	660	1.6	15.19	**BK50-../DHE13LA4**	146	6300	18000
7.5	82	790	0.92	17.92	**BK50-../DHE13LA4**	146	4600	16800
7.5	76	840	1.25	19.33	**BK50-../DHE13LA4**	146	6900	19200
7.5	56	1150	0.91	26.51	**BK50-../DHE13LA4**	146	7800	21200
7.5	135	530	3.2	10.82	**BK60-../DHE13LA4**	158	3200	17000
7.5	118	600	3.1	12.38	**BK60-../DHE13LA4**	158	3500	17400
7.5	106	670	2.9	13.85	**BK60-../DHE13LA4**	158	3850	18000
7.5	102	700	2.8	14.41	**BK60-../DHE13LA4**	158	3650	18600
7.5	91	780	2.5	16.05	**BK60-../DHE13LA4**	158	4050	18800
7.5	80	890	2.5	18.36	**BK60-../DHE13LA4**	158	4000	19900
7.5	72	990	2.3	20.54	**BK60-../DHE13LA4**	158	4400	20600
7.5	60	1190	1.95	24.45	**BK60-../DHE13LA4**	158	4850	22000
7.5	54	1320	1.75	27.36	**BK60-../DHE13LA4**	158	5600	23200
7.5	43.5	1640	1.4	33.78	**BK60-../DHE13LA4**	158	6500	25200
7.5	39	1830	1.25	37.80	**BK60-../DHE13LA4**	158	7300	26500
7.5	32.5	2200	1.05	45.05	**BK60-../DHE13LA4**	158	8200	28300
7.5	29	2450	0.94	50.40	**BK60-../DHE13LA4**	158	9100	29800

The torques marked (*) are maximum permissible torques for service factor f_B=1,0.

7.5 kW

P_N	50 Hz			i	Type	m		
	n_2	M_2	f_B					
[kW]	[1/min]	[Nm]	[—]	[:1]		[kg]	[N]	[N]
7.5	25	2850	0.81	58.95	**BK60-../DHE13LA4**	158	9900	31500
7.5	47.5	1500	3.0	30.90	**BK70-../DHE13LA4**	237	7500	33600
7.5	42	1700	2.8	35.15	**BK70-../DHE13LA4**	237	8000	35000
7.5	36.5	1960	2.5	40.08	**BK70-../DHE13LA4**	237	8300	36300
7.5	32.5	2200	2.3	45.59	**BK70-../DHE13LA4**	237	9000	37900
7.5	27	2650	1.95	54.15	**BK70-../DHE13LA4**	237	9900	40200
7.5	24	2950	1.75	61.60	**BK70-../DHE13LA4**	237	11500	42800
7.5	21	3400	1.55	70.23	**BK70-../DHE13LA4**	237	12500	44800
7.5	18.5	3850	1.35	79.89	**BK70-../DHE13LA4**	237	14300	47600
7.5	16.5	4300	1.2	90.96	**BK70-../DHE13LA4**	237	15300	49900
7.5	14.5	4900	1.05	103.5	**BK70-../DHE13LA4**	237	17200	50000
7.5	12.5	5700	0.91	120.2	**BK70-../DHE13LA4**	237	18600	50000
7.5	11	6500	0.8	136.7	**BK70-../DHE13LA4**	237	20700	50000
7.5	24.5	2900	3.2	59.60	**BK80-../DHE13LA4**	351	15700	65500
7.5	21	3400	2.8	70.72	**BK80-../DHE13LA4**	351	16600	68700
7.5	18.5	3850	2.6	79.22	**BK80-../DHE13LA4**	351	17600	71300
7.5	16	4450	2.3	91.53	**BK80-../DHE13LA4**	351	18300	74200
7.5	14.5	4900	2.1	102.5	**BK80-../DHE13LA4**	351	20500	75000
7.5	12.5	5700	1.85	117.5	**BK80-../DHE13LA4**	351	22300	75000
7.5	11.5	6200	1.7	131.6	**BK80-../DHE13LA4**	351	24900	75000
7.5	9.6	7400	1.4	153.1	**BK80-../DHE13LA4**	351	27200	75000
7.5	8.6	8300	1.25	171.5	**BK80-../DHE13LA4**	351	30000	75000
7.5	8.3	8600	1.35	177.6	**BK80Z-../DHE13LA4**	394	30000	75000
7.5	7.4	9600	1.2	198.9	**BK80Z-../DHE13LA4**	394	30000	75000
7.5	6.5	11000	1.05	226.1	**BK80Z-../DHE13LA4**	394	30000	75000
7.5	5.8	12300	0.93	253.3	**BK80Z-../DHE13LA4**	394	30000	75000
7.5	12.5	5700	2.9	117.0	**BK90-../DHE13LA4**	603	39200	113000
7.5	11.5	6200	2.7	130.9	**BK90-../DHE13LA4**	603	42700	119400
7.5	9.8	7300	2.3	149.5	**BK90-../DHE13LA4**	603	45600	120000
7.5	8.8	8100	2.1	167.2	**BK90-../DHE13LA4**	603	49400	120000
7.5	8.4	8500	2.2	174.7	**BK90Z-../DHE13LA4**	659	49400	120000
7.5	7.5	9500	1.95	195.4	**BK90Z-../DHE13LA4**	659	49400	120000
7.5	6.3	11300	1.65	234.6	**BK90Z-../DHE13LA4**	659	49400	120000
7.5	5.6	12700	1.45	262.5	**BK90Z-../DHE13LA4**	659	49400	120000
7.5	5.0	14300	1.3	295.6	**BK90Z-../DHE13LA4**	659	49400	120000
7.5	4.5	15900	1.15	330.7	**BK90Z-../DHE13LA4**	659	49400	120000
7.5	3.8	18800	0.98	389.1	**BK90Z-../DHE13LA4**	659	49400	120000
7.5	3.4	21000	0.88	435.3	**BK90Z-../DHE13LA4**	659	49400	120000

9.5 kW

P_N	50 Hz			i	Type	m		
	n_2	M_2	f_B					
[kW]	[1/min]	[Nm]	[—]	[:1]		[kg]	[N]	[N]
9.5	405	205	3.5	3.67	**BK50-../DHE16MB4**	170	115	9400
9.5	280	295	2.8	5.26	**BK50-../DHE16MB4**	170	130	10700
9.5	205	405	2.0	7.29	**BK50-../DHE16MB4**	170	620	111000
9.5	152	530	1.75	9.73	**BK50-../DHE16MB4**	170	5400	15400
9.5	147	560	1.45	10.00	**BK50-../DHE16MB4**	170	1220	13200
9.5	106	770	1.35	13.95	**BK50-../DHE16MB4**	170	6100	17400
9.5	97	840	1.25	15.19	**BK50-../DHE16MB4**	170	6300	18000
9.5	77	1060	0.99	19.33	**BK50-../DHE16MB4**	170	6900	19200
9.5	205	440	3.3	7.29	**BK60-../DHE16MB4**	182	2800	14900
9.5	136	660	2.5	10.82	**BK60-../DHE16MB4**	182	3200	17000
9.5	119	760	2.5	12.38	**BK60-../DHE16MB4**	182	3500	17400
9.5	107	840	2.3	13.85	**BK60-../DHE16MB4**	182	3850	18000
9.5	103	880	2.2	14.41	**BK60-../DHE16MB4**	182	3650	18600
9.5	92	980	2.0	16.05	**BK60-../DHE16MB4**	182	4050	18800
9.5	81	1120	1.95	18.36	**BK60-../DHE16MB4**	182	4000	19900
9.5	72	1260	1.8	20.54	**BK60-../DHE16MB4**	182	4400	20600
9.5	61	1480	1.55	24.45	**BK60-../DHE16MB4**	182	4850	22000
9.5	54	1680	1.35	27.36	**BK60-../DHE16MB4**	182	5600	23200

The torques marked (*) are maximum permissible torques for service factor f_B=1,0.

9.5 kW

P_N	50 Hz			i	Type	m		
	n_2	M_2	f_B					
[kW]	[1/min]	[Nm]	[—]	[:1]		[kg]	[N]	[N]
9.5	44	2050	1.1	33.78	**BK60-../DHE16MB4**	182	6500	25200
9.5	39	2300	1.0	37.80	**BK60-../DHE16MB4**	182	7300	26500
9.5	33	2700	0.85	45.05	**BK60-../DHE16MB4**	182	8200	28300
9.5	97	930	3.3	15.16	**BK70-../DHE16MB4**	265	5600	25800
9.5	86	1050	3.3	17.24	**BK70-../DHE16MB4**	265	6500	29200
9.5	68	1330	3.1	21.88	**BK70-../DHE16MB4**	265	6500	30200
9.5	60	1510	2.8	24.89	**BK70-../DHE16MB4**	265	7000	31500
9.5	48	1890	2.4	30.90	**BK70-../DHE16MB4**	265	7500	33600
9.5	42	2150	2.2	35.15	**BK70-../DHE16MB4**	265	8000	35000
9.5	37	2450	2.0	40.08	**BK70-../DHE16MB4**	265	8300	36300
9.5	32.5	2750	1.85	45.59	**BK70-../DHE16MB4**	265	9000	37900
9.5	27.5	3250	1.6	54.15	**BK70-../DHE16MB4**	265	9900	40200
9.5	24	3750	1.4	61.60	**BK70-../DHE16MB4**	265	11500	42800
9.5	21	4300	1.2	70.23	**BK70-../DHE16MB4**	265	12500	44800
9.5	18.5	4900	1.05	79.89	**BK70-../DHE16MB4**	265	14300	47600
9.5	16.5	5400	0.96	90.96	**BK70-../DHE16MB4**	265	15300	49900
9.5	14.5	6200	0.84	103.5	**BK70-../DHE16MB4**	265	17200	50000
9.5	35.5	2550	3.2	41.78	**BK80-../DHE16MB4**	374	13500	58700
9.5	31.5	2850	3.0	46.80	**BK80-../DHE16MB4**	374	14300	60900
9.5	28	3200	2.8	53.21	**BK80-../DHE16MB4**	374	14800	63100
9.5	25	3600	2.6	59.60	**BK80-../DHE16MB4**	374	15700	65500
9.5	21	4300	2.2	70.72	**BK80-../DHE16MB4**	374	16600	68700
9.5	19	4750	2.1	79.22	**BK80-../DHE16MB4**	374	17600	71300
9.5	16.5	5400	1.95	91.53	**BK80-../DHE16MB4**	374	18300	74200
9.5	14.5	6200	1.7	102.5	**BK80-../DHE16MB4**	374	20500	75000
9.5	13	6900	1.5	117.5	**BK80-../DHE16MB4**	374	22300	75000
9.5	11.5	7800	1.35	131.6	**BK80-../DHE16MB4**	374	24900	75000
9.5	9.7	9300	1.15	153.1	**BK80-../DHE16MB4**	374	27200	75000
9.5	8.6	10500	1.0	171.5	**BK80-../DHE16MB4**	374	30000	75000
9.5	8.3	10900	1.05	177.6	**BK80Z-../DHE16MB4**	418	30000	75000
9.5	7.4	12200	0.94	198.9	**BK80Z-../DHE16MB4**	418	30000	75000
9.5	6.6	13700	0.84	226.1	**BK80Z-../DHE16MB4**	418	30000	75000
9.5	16.5	5400	3.1	91.19	**BK90-../DHE16MB4**	628	33300	101000
9.5	14.5	6200	2.7	102.0	**BK90-../DHE16MB4**	628	36600	107000
9.5	13	6900	2.4	117.0	**BK90-../DHE16MB4**	628	39200	113000
9.5	11.5	7800	2.2	130.9	**BK90-../DHE16MB4**	628	42700	119400
9.5	9.9	9100	1.85	149.5	**BK90-../DHE16MB4**	628	45600	120000
9.5	8.8	10300	1.65	167.2	**BK90-../DHE16MB4**	628	49400	120000
9.5	8.5	10600	1.75	174.7	**BK90Z-../DHE16MB4**	687	49400	120000
9.5	7.6	11900	1.55	195.4	**BK90Z-../DHE16MB4**	687	49400	120000
9.5	6.3	14400	1.3	234.6	**BK90Z-../DHE16MB4**	687	49400	120000
9.5	5.6	16200	1.15	262.5	**BK90Z-../DHE16MB4**	687	49400	120000
9.5	5.0	18100	1.0	295.6	**BK90Z-../DHE16MB4**	687	49400	120000
9.5	4.5	20100	0.92	330.7	**BK90Z-../DHE16MB4**	687	49400	120000

11 kW

P_N	50 Hz			i	Type	m		
	n_2	M_2	f_B					
[kW]	[1/min]	[Nm]	[—]	[:1]		[kg]	[N]	[N]
11	405	235	3.1	3.67	**BK50-../DHE16LB4**	183	115	9400
11	280	345	2.4	5.26	**BK50-../DHE16LB4**	183	130	10700
11	205	470	1.75	7.29	**BK50-../DHE16LB4**	183	620	111000
11	152	620	1.5	9.73	**BK50-../DHE16LB4**	183	5400	15400
11	147	650	1.25	10.00	**BK50-../DHE16LB4**	183	1220	13200
11	106	890	1.2	13.95	**BK50-../DHE16LB4**	183	6100	17400
11	97	970	1.1	15.19	**BK50-../DHE16LB4**	183	6300	18000
11	77	1220	0.86	19.33	**BK50-../DHE16LB4**	183	6900	19200
11	205	510	2.9	7.29	**BK60-../DHE16LB4**	195	2800	14900
11	136	770	2.2	10.82	**BK60-../DHE16LB4**	195	3200	17000
11	119	880	2.1	12.38	**BK60-../DHE16LB4**	195	3500	17400
11	107	980	2.0	13.85	**BK60-../DHE16LB4**	195	3850	18000

The torques marked (*) are maximum permissible torques for service factor f_B=1,0.

11 kW

P_N	50 Hz			i	Type	m		
	n_2	M_2	f_B					
[kW]	[1/min]	[Nm]	[—]	[:1]		[kg]	[N]	[N]
11	103	1010	1.9	14.41	**BK60-../DHE16LB4**	195	3650	18600
11	92	1140	1.75	16.05	**BK60-../DHE16LB4**	195	4050	18800
11	81	1290	1.7	18.36	**BK60-../DHE16LB4**	195	4000	19900
11	72	1450	1.55	20.54	**BK60-../DHE16LB4**	195	4400	20600
11	61	1720	1.35	24.45	**BK60-../DHE16LB4**	195	4850	22000
11	54	1940	1.2	27.36	**BK60-../DHE16LB4**	195	5600	23200
11	44	2350	0.98	33.78	**BK60-../DHE16LB4**	195	6500	25200
11	39	2650	0.87	37.80	**BK60-../DHE16LB4**	195	7300	26500
11	108	970	3.1	13.70	**BK70-../DHE16LB4**	278	5400	24800
11	97	1080	2.8	15.16	**BK70-../DHE16LB4**	278	5600	25800
11	86	1220	2.9	17.24	**BK70-../DHE16LB4**	278	6500	29200
11	68	1540	2.6	21.88	**BK70-../DHE16LB4**	278	6500	30200
11	60	1750	2.4	24.89	**BK70-../DHE16LB4**	278	7000	31500
11	48	2150	2.1	30.90	**BK70-../DHE16LB4**	278	7500	33600
11	42	2500	1.9	35.15	**BK70-../DHE16LB4**	278	8000	35000
11	37	2800	1.75	40.08	**BK70-../DHE16LB4**	278	8300	36300
11	32.5	3200	1.6	45.59	**BK70-../DHE16LB4**	278	9000	37900
11	27.5	3800	1.35	54.15	**BK70-../DHE16LB4**	278	9900	40200
11	24	4350	1.2	61.60	**BK70-../DHE16LB4**	278	11500	42800
11	21	5000	1.05	70.23	**BK70-../DHE16LB4**	278	12500	44800
11	18.5	5600	0.93	79.89	**BK70-../DHE16LB4**	278	14300	47600
11	16.5	6300	0.83	90.96	**BK70-../DHE16LB4**	278	15300	49900
11	43	2400	3.3	34.22	**BK80-../DHE16LB4**	388	12600	55400
11	35.5	2950	2.8	41.78	**BK80-../DHE16LB4**	388	13500	58700
11	31.5	3300	2.6	46.80	**BK80-../DHE16LB4**	388	14300	60900
11	28	3750	2.4	53.21	**BK80-../DHE16LB4**	388	14800	63100
11	25	4200	2.2	59.60	**BK80-../DHE16LB4**	388	15700	65500
11	21	5000	1.95	70.72	**BK80-../DHE16LB4**	388	16600	68700
11	19	5500	1.85	79.22	**BK80-../DHE16LB4**	388	17600	71300
11	16.5	6300	1.65	91.53	**BK80-../DHE16LB4**	388	18300	74200
11	14.5	7200	1.45	102.5	**BK80-../DHE16LB4**	388	20500	75000
11	13	8000	1.3	117.5	**BK80-../DHE16LB4**	388	22300	75000
11	11.5	9100	1.15	131.6	**BK80-../DHE16LB4**	388	24900	75000
11	9.7	10800	0.97	153.1	**BK80-../DHE16LB4**	388	27200	75000
11	8.6	12200	0.86	171.5	**BK80-../DHE16LB4**	388	30000	75000
11	8.3	12600	0.91	177.6	**BK80Z-../DHE16LB4**	431	30000	75000
11	7.4	14100	0.82	198.9	**BK80Z-../DHE16LB4**	431	30000	75000
11	19	5500	3.1	77.51	**BK90-../DHE16LB4**	641	30300	94400
11	16.5	6300	2.7	91.19	**BK90-../DHE16LB4**	641	33300	101000
11	14.5	7200	2.3	102.0	**BK90-../DHE16LB4**	641	36600	107000
11	13	8000	2.1	117.0	**BK90-../DHE16LB4**	641	39200	113000
11	11.5	9100	1.85	130.9	**BK90-../DHE16LB4**	641	42700	119400
11	9.9	10600	1.6	149.5	**BK90-../DHE16LB4**	641	45600	120000
11	8.8	11900	1.4	167.2	**BK90-../DHE16LB4**	641	49400	120000
11	8.5	12300	1.5	174.7	**BK90Z-../DHE16LB4**	700	49400	120000
11	7.6	13800	1.35	195.4	**BK90Z-../DHE16LB4**	700	49400	120000
11	6.3	16600	1.1	234.6	**BK90Z-../DHE16LB4**	700	49400	120000
11	5.6	18700	0.99	262.5	**BK90Z-../DHE16LB4**	700	49400	120000
11	5.0	21000	0.88	295.6	**BK90Z-../DHE16LB4**	700	49400	120000

15 kW

P_N	50 Hz			i	Type	m		
	n_2	M_2	f_B					
[kW]	[1/min]	[Nm]	[—]	[:1]		[kg]	[N]	[N]
15	405	325	2.2	3.67	**BK50-../DHE16XB4**	193	115	9400
15	280	470	1.75	5.26	**BK50-../DHE16XB4**	193	130	10700
15	205	640	1.25	7.29	**BK50-../DHE16XB4**	193	620	111000
15	152	840	1.1	9.73	**BK50-../DHE16XB4**	193	5400	15400
15	147	890	0.91	10.00	**BK50-../DHE16XB4**	193	1220	13200
15	106	1210	0.87	13.95	**BK50-../DHE16XB4**	193	6100	17400
15	97	1320	0.8	15.19	**BK50-../DHE16XB4**	193	6300	18000

The torques marked (*) are maximum permissible torques for service factor f_B=1,0.

15 kW

P_N	50 Hz			i	**Type**	m		
	n_2	M_2	f_B					
[kW]	[1/min]	[Nm]	[—]	[:1]		[kg]	[N]	[N]
15	205	690	2.1	7.29	**BK60-../DHE16XB4**	205	2800	14900
15	136	1050	1.6	10.82	**BK60-../DHE16XB4**	205	3200	17000
15	119	1200	1.55	12.38	**BK60-../DHE16XB4**	205	3500	17400
15	107	1330	1.5	13.85	**BK60-../DHE16XB4**	205	3850	18000
15	103	1390	1.4	14.41	**BK60-../DHE16XB4**	205	3650	18600
15	92	1550	1.25	16.05	**BK60-../DHE16XB4**	205	4050	18800
15	81	1760	1.25	18.36	**BK60-../DHE16XB4**	205	4000	19900
15	72	1980	1.15	20.54	**BK60-../DHE16XB4**	205	4400	20600
15	61	2300	1.0	24.45	**BK60-../DHE16XB4**	205	4850	22000
15	54	2650	0.87	27.36	**BK60-../DHE16XB4**	205	5600	23200
15	108	1320	2.3	13.70	**BK70-../DHE16XB4**	288	5400	24800
15	97	1470	2.1	15.16	**BK70-../DHE16XB4**	288	5600	25800
15	86	1660	2.1	17.24	**BK70-../DHE16XB4**	288	6500	29200
15	68	2100	1.95	21.88	**BK70-../DHE16XB4**	288	6500	30200
15	60	2350	1.8	24.89	**BK70-../DHE16XB4**	288	7000	31500
15	48	2950	1.55	30.90	**BK70-../DHE16XB4**	288	7500	33600
15	42	3400	1.4	35.15	**BK70-../DHE16XB4**	288	8000	35000
15	37	3850	1.25	40.08	**BK70-../DHE16XB4**	288	8300	36300
15	32.5	4400	1.15	45.59	**BK70-../DHE16XB4**	288	9000	37900
15	27.5	5200	1.0	54.15	**BK70-../DHE16XB4**	288	9900	40200
15	24	5900	0.88	61.60	**BK70-../DHE16XB4**	288	11500	42800
15	48.5	2950	2.5	30.56	**BK80-../DHE16XB4**	398	11900	53400
15	43	3300	2.4	34.22	**BK80-../DHE16XB4**	398	12600	55400
15	35.5	4000	2.1	41.78	**BK80-../DHE16XB4**	398	13500	58700
15	31.5	4500	1.9	46.80	**BK80-../DHE16XB4**	398	14300	60900
15	28	5100	1.75	53.21	**BK80-../DHE16XB4**	398	14800	63100
15	25	5700	1.6	59.60	**BK80-../DHE16XB4**	398	15700	65500
15	21	6800	1.4	70.72	**BK80-../DHE16XB4**	398	16600	68700
15	19	7500	1.35	79.22	**BK80-../DHE16XB4**	398	17600	71300
15	16.5	8600	1.2	91.53	**BK80-../DHE16XB4**	398	18300	74200
15	14.5	9800	1.05	102.5	**BK80-../DHE16XB4**	398	20500	75000
15	13	11000	0.95	117.5	**BK80-../DHE16XB4**	398	22300	75000
15	11.5	12400	0.85	131.6	**BK80-../DHE16XB4**	398	24900	75000
15	27	5300	3.0	54.98	**BK90-../DHE16XB4**	651	24000	81000
15	24	5900	2.8	61.52	**BK90-../DHE16XB4**	651	25500	84600
15	21.5	6600	2.5	69.27	**BK90-../DHE16XB4**	651	27200	88900
15	19	7500	2.2	77.51	**BK90-../DHE16XB4**	651	30300	94400
15	16.5	8600	1.95	91.19	**BK90-../DHE16XB4**	651	33300	101000
15	14.5	9800	1.7	102.0	**BK90-../DHE16XB4**	651	36600	107000
15	13	11000	1.55	117.0	**BK90-../DHE16XB4**	651	39200	113000
15	11.5	12400	1.35	130.9	**BK90-../DHE16XB4**	651	42700	119400
15	9.9	14400	1.15	149.5	**BK90-../DHE16XB4**	651	45600	120000
15	8.8	16200	1.05	167.2	**BK90-../DHE16XB4**	651	49400	120000
15	8.5	16800	1.1	174.7	**BK90Z-../DHE16XB4**	710	49400	120000
15	7.6	18800	0.98	195.4	**BK90Z-../DHE16XB4**	710	49400	120000
15	6.3	22700	0.81	234.6	**BK90Z-../DHE16XB4**	710	49400	120000

18.5 kW

P_N	50 Hz			i	**Type**	m		
	n_2	M_2	f_B					
[kW]	[1/min]	[Nm]	[—]	[:1]		[kg]	[N]	[N]
18.5	405	400	1.8	3.67	**BK50-../DHE18LB4**	245	115	9400
18.5	280	580	1.4	5.26	**BK50-../DHE18LB4**	245	130	10700
18.5	205	790	1.05	7.29	**BK50-../DHE18LB4**	245	620	111000
18.5	205	860	1.7	7.29	**BK60-../DHE18LB4**	252	2800	14900
18.5	136	1290	1.3	10.82	**BK60-../DHE18LB4**	252	3200	17000
18.5	103	1710	1.15	14.41	**BK60-../DHE18LB4**	252	3650	18600
18.5	81	2150	1.0	18.36	**BK60-../DHE18LB4**	252	4000	19900
18.5	72	2450	0.92	20.54	**BK60-../DHE18LB4**	252	4400	20600
18.5	61	2850	0.81	24.45	**BK60-../DHE18LB4**	252	4850	22000

The torques marked (*) are maximum permissible torques for service factor f_B=1,0.

18.5 kW

P_N	50 Hz			i	Type	m		
	n_2	M_2	f_B					
[kW]	[1/min]	[Nm]	[—]	[:1]		[kg]	[N]	[N]
18.5	97	1820	1.7	15.16	**BK70-../DHE18LB4**	329	5600	25800
18.5	86	2050	1.7	17.24	**BK70-../DHE18LB4**	329	6500	29200
18.5	68	2550	1.6	21.88	**BK70-../DHE18LB4**	329	6500	30200
18.5	60	2900	1.45	24.89	**BK70-../DHE18LB4**	329	7000	31500
18.5	48	3650	1.25	30.90	**BK70-../DHE18LB4**	329	7500	33600
18.5	42	4200	1.15	35.15	**BK70-../DHE18LB4**	329	8000	35000
18.5	37	4750	1.05	40.08	**BK70-../DHE18LB4**	329	8300	36300
18.5	32.5	5400	0.95	45.59	**BK70-../DHE18LB4**	329	9000	37900
18.5	27.5	6400	0.81	54.15	**BK70-../DHE18LB4**	329	9900	40200
18.5	103	1710	2.5	14.34	**BK80-../DHE18LB4**	443	7900	36200
18.5	93	1890	2.5	15.88	**BK80-../DHE18LB4**	443	8400	38600
18.5	83	2100	2.5	17.79	**BK80-../DHE18LB4**	443	9400	42100
18.5	76	2300	2.5	19.35	**BK80-../DHE18LB4**	443	9500	44000
18.5	67	2600	2.6	22.19	**BK80-../DHE18LB4**	443	10500	48500
18.5	60	2900	2.4	24.85	**BK80-../DHE18LB4**	443	11200	50400
18.5	48.5	3600	2.1	30.56	**BK80-../DHE18LB4**	443	11900	53400
18.5	43	4100	1.9	34.22	**BK80-../DHE18LB4**	443	12600	55400
18.5	35.5	4950	1.65	41.78	**BK80-../DHE18LB4**	443	13500	58700
18.5	31.5	5600	1.55	46.80	**BK80-../DHE18LB4**	443	14300	60900
18.5	28	6300	1.4	53.21	**BK80-../DHE18LB4**	443	14800	63100
18.5	25	7000	1.3	59.60	**BK80-../DHE18LB4**	443	15700	65500
18.5	21	8400	1.15	70.72	**BK80-../DHE18LB4**	443	16600	68700
18.5	19	9200	1.1	79.22	**BK80-../DHE18LB4**	443	17600	71300
18.5	16.5	10700	0.97	91.53	**BK80-../DHE18LB4**	443	18300	74200
18.5	14.5	12100	0.87	102.5	**BK80-../DHE18LB4**	443	20500	75000
18.5	36	4900	3.0	40.94	**BK90-../DHE18LB4**	698	21400	73100
18.5	32.5	5400	2.9	45.80	**BK90-../DHE18LB4**	698	22700	76300
18.5	27	6500	2.5	54.98	**BK90-../DHE18LB4**	698	24000	81000
18.5	24	7300	2.3	61.52	**BK90-../DHE18LB4**	698	25500	84600
18.5	21.5	8200	2.0	69.27	**BK90-../DHE18LB4**	698	27200	88900
18.5	19	9200	1.85	77.51	**BK90-../DHE18LB4**	698	30300	94400
18.5	16.5	10700	1.55	91.19	**BK90-../DHE18LB4**	698	33300	101000
18.5	14.5	12100	1.4	102.0	**BK90-../DHE18LB4**	698	36600	107000
18.5	13	13500	1.25	117.0	**BK90-../DHE18LB4**	698	39200	113000
18.5	11.5	15300	1.1	130.9	**BK90-../DHE18LB4**	698	42700	119400
18.5	9.9	17800	0.94	149.5	**BK90-../DHE18LB4**	698	45600	120000
18.5	8.8	20000	0.84	167.2	**BK90-../DHE18LB4**	698	49400	120000
18.5	8.5	20700	0.89	174.7	**BK90Z-../DHE18LB4**	751	49400	120000
18.5	7.6	23200	0.8	195.4	**BK90Z-../DHE18LB4**	751	49400	120000

22 kW

P_N	50 Hz			i	Type	m		
	n_2	M_2	f_B					
[kW]	[1/min]	[Nm]	[—]	[:1]		[kg]	[N]	[N]
22	97	2150	1.4	15.16	**BK70-../DHE18XB4**	347	5600	25800
22	86	2400	1.45	17.24	**BK70-../DHE18XB4**	347	6500	29200
22	68	3050	1.35	21.88	**BK70-../DHE18XB4**	347	6500	30200
22	60	3500	1.2	24.89	**BK70-../DHE18XB4**	347	7000	31500
22	48	4350	1.05	30.90	**BK70-../DHE18XB4**	347	7500	33600
22	42	5000	0.95	35.15	**BK70-../DHE18XB4**	347	8000	35000
22	37	5600	0.87	40.08	**BK70-../DHE18XB4**	347	8300	36300
22	32.5	6400	0.8	45.59	**BK70-../DHE18XB4**	347	9000	37900
22	103	2000	2.1	14.34	**BK80-../DHE18XB4**	461	7900	36200
22	93	2250	2.1	15.88	**BK80-../DHE18XB4**	461	8400	38600
22	83	2500	2.1	17.79	**BK80-../DHE18XB4**	461	9400	42100
22	76	2750	2.1	19.35	**BK80-../DHE18XB4**	461	9500	44000
22	67	3100	2.2	22.19	**BK80-../DHE18XB4**	461	10500	48500
22	60	3500	2.0	24.85	**BK80-../DHE18XB4**	461	11200	50400
22	48.5	4300	1.75	30.56	**BK80-../DHE18XB4**	461	11900	53400
22	43	4850	1.6	34.22	**BK80-../DHE18XB4**	461	12600	55400
22	35.5	5900	1.4	41.78	**BK80-../DHE18XB4**	461	13500	58700
22	31.5	6600	1.3	46.80	**BK80-../DHE18XB4**	461	14300	60900

The torques marked (*) are maximum permissible torques for service factor f_B=1,0.

22 kW

P_N	50 Hz			i	**Type**	m		
	n_2	M_2	f_B					
[kW]	[1/min]	[Nm]	[—]	[:1]		[kg]	[N]	[N]
22	28	7500	1.2	53.21	**BK80-../DHE18XB4**	461	14800	63100
22	25	8400	1.1	59.60	**BK80-../DHE18XB4**	461	15700	65500
22	21	10000	0.96	70.72	**BK80-../DHE18XB4**	461	16600	68700
22	19	11000	0.91	79.22	**BK80-../DHE18XB4**	461	17600	71300
22	16.5	12700	0.82	91.53	**BK80-../DHE18XB4**	461	18300	74200
22	48.5	4300	3.1	30.47	**BK90-../DHE18XB4**	716	19100	65900
22	43.5	4800	2.9	34.09	**BK90-../DHE18XB4**	716	20300	68800
22	36	5800	2.5	40.94	**BK90-../DHE18XB4**	716	21400	73100
22	32.5	6400	2.4	45.80	**BK90-../DHE18XB4**	716	22700	76300
22	27	7700	2.1	54.98	**BK90-../DHE18XB4**	716	24000	81000
22	24	8700	1.95	61.52	**BK90-../DHE18XB4**	716	25500	84600
22	21.5	9700	1.75	69.27	**BK90-../DHE18XB4**	716	27200	88900
22	19	11000	1.55	77.51	**BK90-../DHE18XB4**	716	30300	94400
22	16.5	12700	1.3	91.19	**BK90-../DHE18XB4**	716	33300	101000
22	14.5	14400	1.15	102.0	**BK90-../DHE18XB4**	716	36600	107000
22	13	16100	1.05	117.0	**BK90-../DHE18XB4**	716	39200	113000
22	11.5	18200	0.92	130.9	**BK90-../DHE18XB4**	716	42700	119400

The torques marked (*) are maximum permissible torques for service factor f_B=1,0.

0.03 kW

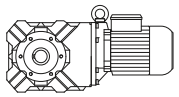

P_N	50 Hz			i	Type	m		
	n_2	M_2	f_B					
[kW]	[1/min]	[Nm]	[—]	[:1]		[kg]	[N]	[N]
0.03	28.5	8.9	9.0	47.78	**BK06-../D04LA4**	7.6	1500	-
0.03	25	10.1	6.7	54.38	**BK06-../D04LA4**	7.6	1600	-
0.03	21.5	11.8	5.4	63.33	**BK06-../D04LA4**	7.6	1700	-
0.03	3.7	62	2.7	373.4	**BK10Z-../D04LA4**	21	7000	-
0.03	3.2	71	2.1	428.8	**BK10Z-../D04LA4**	21	7000	-
0.03	2.5	66	3.3	552.3	**BK10G06-../D04LA4**	25	7000	-
0.03	2.2	77	2.9	635.5	**BK10G06-../D04LA4**	25	7000	-
0.03	1.8	98	2.2	789.7	**BK10G06-../D04LA4**	25	7000	-
0.03	1.5	118	1.85	929.3	**BK10G06-../D04LA4**	25	7000	-
0.03	1.3	139	1.6	1112	**BK10G06-../D04LA4**	25	7000	-
0.03	1.0	184	1.2	1361	**BK10G06-../D04LA4**	25	7000	-
0.03	0.9	205	1.05	1577	**BK10G06-../D04LA4**	25	7000	-
0.03	0.7	220*	1.0	1971	**BK10G06-../D04LA4**	25	7000	-
0.03	0.6	220*	1.0	2261	**BK10G06-../D04LA4**	25	7000	-
0.03	0.55	220*	1.0	2467	**BK10G06-../D04LA4**	25	7000	-
0.03	0.48	220*	1.0	2849	**BK10G06-../D04LA4**	25	7000	-
0.03	0.44	220*	1.0	3107	**BK10G06-../D04LA4**	25	7000	-
0.03	0.39	220*	1.0	3537	**BK10G06-../D04LA4**	25	7000	-
0.03	0.33	220*	1.0	4120	**BK10G06-../D04LA4**	25	7000	-
0.03	1.6	110	3.3	891.2	**BK20G06-../D04LA4**	34	8700	9000
0.03	1.3	138	2.6	1066	**BK20G06-../D04LA4**	34	8700	9000
0.03	1.1	165	2.2	1305	**BK20G06-../D04LA4**	34	8700	9000
0.03	0.95	193	1.85	1424	**BK20G06-../D04LA4**	34	8700	9000
0.03	0.85	220	1.65	1650	**BK20G06-../D04LA4**	34	8700	9000
0.03	0.7	270	1.35	2062	**BK20G06-../D04LA4**	34	8700	9000
0.03	0.6	320	1.15	2366	**BK20G06-../D04LA4**	34	8700	9000
0.03	0.55	350	1.05	2580	**BK20G06-../D04LA4**	34	8700	9000
0.03	0.48	360*	1.0	2831	**BK20G06-../D04LA4**	34	8700	9000
0.03	0.44	360*	1.0	3088	**BK20G06-../D04LA4**	34	8700	9000
0.03	0.39	360*	1.0	3515	**BK20G06-../D04LA4**	34	8700	9000
0.03	0.33	360*	1.0	4094	**BK20G06-../D04LA4**	34	8700	9000
0.03	1.2	150	3.3	1142	**BK30G06-../D04LA4**	40	11200	12000
0.03	1.1	165	3.0	1281	**BK30G06-../D04LA4**	40	11200	12000
0.03	0.85	220	2.2	1620	**BK30G06-../D04LA4**	40	11200	12000
0.03	0.8	235	2.1	1767	**BK30G06-../D04LA4**	40	11200	12000
0.03	0.7	270	1.8	2024	**BK30G06-../D04LA4**	40	11200	12000
0.03	0.55	350	1.4	2533	**BK30G06-../D04LA4**	40	11200	12000
0.03	0.5	380	1.3	2738	**BK30G06-../D04LA4**	40	11200	12000
0.03	0.46	415	1.2	2986	**BK30G06-../D04LA4**	40	11200	12000
0.03	0.4	480	1.0	3399	**BK30G06-../D04LA4**	40	11200	12000
0.03	0.35	490*	1.0	3959	**BK30G06-../D04LA4**	40	11200	12000

0.04 kW

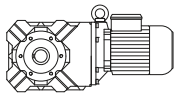

P_N	50 Hz			i	Type	m		
	n_2	M_2	f_B					
[kW]	[1/min]	[Nm]	[—]	[:1]		[kg]	[N]	[N]
0.04	41	8.3	9.6	33.33	**BK06-../D04LA4**	7.6	1320	-
0.04	35.5	9.6	8.3	38.18	**BK06-../D04LA4**	7.6	1380	-
0.04	28.5	11.9	6.7	47.78	**BK06-../D04LA4**	7.6	1500	-
0.04	25	13.5	5.0	54.38	**BK06-../D04LA4**	7.6	1600	-
0.04	21.5	15.8	4.0	63.33	**BK06-../D04LA4**	7.6	1700	-
0.04	4.5	68	2.7	302.4	**BK10Z-../D04LA4**	21	7000	-
0.04	3.7	83	2.0	373.4	**BK10Z-../D04LA4**	21	7000	-
0.04	3.2	95	1.55	428.8	**BK10Z-../D04LA4**	21	7000	-
0.04	3.0	78	2.8	459.2	**BK10G06-../D04LA4**	25	7000	-
0.04	2.7	88	2.5	501.4	**BK10G06-../D04LA4**	25	7000	-
0.04	2.5	96	2.3	552.3	**BK10G06-../D04LA4**	25	7000	-
0.04	2.2	112	1.95	635.5	**BK10G06-../D04LA4**	25	7000	-
0.04	1.8	140	1.55	789.7	**BK10G06-../D04LA4**	25	7000	-
0.04	1.5	167	1.3	929.3	**BK10G06-../D04LA4**	25	7000	-
0.04	1.3	195	1.15	1112	**BK10G06-../D04LA4**	25	7000	-

The torques marked (*) are maximum permissible torques for service factor f_B=1,0.

0.04 kW

P_N	50 Hz			i	Type	m		
	n_2	M_2	f_B					
[kW]	[1/min]	[Nm]	[—]	[:1]		[kg]	[N]	[N]
0.04	1.0	255	0.86	1361	**BK10G06-../D04LA4**	25	7000	-
0.04	2.2	110	3.3	630.0	**BK20G06-../D04LA4**	34	8700	9000
0.04	1.8	138	2.6	757.0	**BK20G06-../D04LA4**	34	8700	9000
0.04	1.6	156	2.3	891.2	**BK20G06-../D04LA4**	34	8700	9000
0.04	1.3	195	1.85	1066	**BK20G06-../D04LA4**	34	8700	9000
0.04	1.1	230	1.55	1305	**BK20G06-../D04LA4**	34	8700	9000
0.04	0.95	270	1.35	1424	**BK20G06-../D04LA4**	34	8700	9000
0.04	0.85	305	1.2	1650	**BK20G06-../D04LA4**	34	8700	9000
0.04	1.7	147	3.3	810.9	**BK30G06-../D04LA4**	40	11200	12000
0.04	1.5	167	2.9	954.1	**BK30G06-../D04LA4**	40	11200	12000
0.04	1.2	210	2.3	1142	**BK30G06-../D04LA4**	40	11200	12000
0.04	1.1	230	2.1	1281	**BK30G06-../D04LA4**	40	11200	12000
0.04	0.85	305	1.6	1620	**BK30G06-../D04LA4**	40	11200	12000
0.04	0.8	325	1.5	1767	**BK30G06-../D04LA4**	40	11200	12000
0.04	0.7	375	1.3	2024	**BK30G06-../D04LA4**	40	11200	12000
0.04	0.55	480	1.0	2533	**BK30G06-../D04LA4**	40	11200	12000

0.06 kW

P_N	50 Hz			i	Type	m		
	n_2	M_2	f_B					
[kW]	[1/min]	[Nm]	[—]	[:1]		[kg]	[N]	[N]
0.06	63	8.1	9.9	21.54	**BK06-../D04LA4**	7.6	1150	-
0.06	52	9.9	8.1	26.36	**BK06-../D04LA4**	7.6	1230	-
0.06	41	12.5	6.4	33.33	**BK06-../D04LA4**	7.6	1320	-
0.06	35.5	14.5	5.5	38.18	**BK06-../D04LA4**	7.6	1380	-
0.06	28.5	17.8	4.5	47.78	**BK06-../D04LA4**	7.6	1500	-
0.06	25	20	3.4	54.38	**BK06-../D04LA4**	7.6	1600	-
0.06	21.5	23.5	2.7	63.33	**BK06-../D04LA4**	7.6	1700	-
0.06	11.5	42	3.3	120.3	**BK10Z-../D06LA4**	24	7000	-
0.06	9.5	50	3.3	143.2	**BK10Z-../D06LA4**	24	7000	-
0.06	6.6	71	2.8	204.7	**BK10Z-../D06LA4**	24	7000	-
0.06	5.3	88	2.3	257.9	**BK10Z-../D06LA4**	24	7000	-
0.06	4.5	103	1.8	302.4	**BK10Z-../D06LA4**	24	7000	-
0.06	3.7	125	1.3	373.4	**BK10Z-../D06LA4**	24	7000	-
0.06	3.2	143	1.05	428.8	**BK10Z-../D06LA4**	24	7000	-
0.06	3.0	129	1.7	459.2	**BK10G06-../D06LA4**	28	7000	-
0.06	2.7	144	1.55	501.4	**BK10G06-../D06LA4**	28	7000	-
0.06	2.5	157	1.4	552.3	**BK10G06-../D06LA4**	28	7000	-
0.06	2.2	180	1.2	635.5	**BK10G06-../D06LA4**	28	7000	-
0.06	1.8	220	1.0	789.7	**BK10G06-../D06LA4**	28	7000	-
0.06	1.5	265	0.83	929.3	**BK10G06-../D06LA4**	28	7000	-
0.06	4.6	100	3.1	298.2	**BK20Z-../D06LA4**	34	8700	9000
0.06	3.7	123	2.4	367.7	**BK20Z-../D06LA4**	34	8700	9000
0.06	3.2	120	3.0	429.7	**BK20G06-../D06LA4**	38	8700	9000
0.06	2.9	133	2.7	480.4	**BK20G06-../D06LA4**	38	8700	9000
0.06	2.6	149	2.4	524.5	**BK20G06-../D06LA4**	38	8700	9000
0.06	2.2	178	2.0	630.0	**BK20G06-../D06LA4**	38	8700	9000
0.06	1.8	220	1.65	757.0	**BK20G06-../D06LA4**	38	8700	9000
0.06	1.6	245	1.45	891.2	**BK20G06-../D06LA4**	38	8700	9000
0.06	1.3	305	1.2	1066	**BK20G06-../D06LA4**	38	8700	9000
0.06	1.1	360	1.0	1305	**BK20G06-../D06LA4**	38	8700	9000
0.06	3.6	128	3.1	380.7	**BK30Z-../D06LA4**	41	11200	12000
0.06	3.1	147	2.6	441.3	**BK30Z-../D06LA4**	41	11200	12000
0.06	2.4	163	3.0	567.0	**BK30G06-../D06LA4**	44	11200	12000
0.06	2.1	188	2.6	652.5	**BK30G06-../D06LA4**	44	11200	12000
0.06	1.9	210	2.3	743.0	**BK30G06-../D06LA4**	44	11200	12000
0.06	1.7	235	2.1	810.9	**BK30G06-../D06LA4**	44	11200	12000
0.06	1.5	265	1.85	954.1	**BK30G06-../D06LA4**	44	11200	12000
0.06	1.2	330	1.5	1142	**BK30G06-../D06LA4**	44	11200	12000
0.06	1.1	360	1.35	1281	**BK30G06-../D06LA4**	44	11200	12000

The torques marked (*) are maximum permissible torques for service factor f_B=1,0.

0.06 kW

P_N	50 Hz			i	Type	m		
	n_2	M_2	f_B					
[kW]	[1/min]	[Nm]	[—]	[:1]		[kg]	[N]	[N]
0.06	0.85	475	1.05	1620	**BK30G06-../D06LA4**	44	11200	12000
0.06	1.2	290	2.9	1189	**BK40G10-../D06LA4**	68	11700	17000
0.06	0.95	380	2.2	1428	**BK40G10-../D06LA4**	68	11700	17000
0.06	0.8	465	1.85	1798	**BK40G10-../D06LA4**	68	11700	17000
0.06	0.65	580	1.45	2108	**BK40G10-../D06LA4**	68	11700	17000
0.06	0.6	640	1.35	2350	**BK40G10-../D06LA4**	68	11700	17000
0.06	0.55	700	1.2	2604	**BK40G10-../D06LA4**	68	11700	17000
0.06	1.0	370	3.1	1398	**BK50G10-../D06LA4**	96	14100	111000
0.06	0.9	415	2.8	1549	**BK50G10-../D06LA4**	96	14100	111000
0.06	0.75	510	2.3	1816	**BK50G10-../D06LA4**	96	14100	111000
0.06	0.7	550	2.1	2024	**BK50G10-../D06LA4**	96	14100	111000
0.06	0.6	630	1.85	2450	**BK50G10-../D06LA4**	96	14100	111000
0.06	0.5	760	1.5	2730	**BK50G10-../D06LA4**	96	14100	111000
0.06	0.45	850	1.35	3025	**BK50G10-../D06LA4**	96	14100	111000
0.06	0.39	960	1.2	3492	**BK50G10-../D06LA4**	96	14100	111000
0.06	0.35	1080	1.05	3870	**BK50G10-../D06LA4**	96	14100	111000
0.06	0.39	920	2.7	3533	**BK60G20-../D06LA4**	123	16600	34000
0.06	0.32	1240	2.0	4239	**BK60G20-../D06LA4**	123	16600	34000
0.06	0.27	1570	1.6	5072	**BK60G20-../D06LA4**	123	16600	34000
0.06	0.24	1830	1.35	5721	**BK60G20-../D06LA4**	123	16600	34000
0.06	0.21	2150	1.15	6565	**BK60G20-../D06LA4**	123	16600	34000
0.06	0.19	2450	1.0	7291	**BK60G20-../D06LA4**	123	16600	34000
0.06	0.21	2000	2.9	6504	**BK70G20-../D06LA4**	201	24100	50000
0.06	0.17	2650	2.2	8149	**BK70G20-../D06LA4**	201	24100	50000
0.06	0.15	3100	1.85	9351	**BK70G20-../D06LA4**	201	24100	50000

0.09 kW

P_N	50 Hz			i	Type	m		
	n_2	M_2	f_B					
[kW]	[1/min]	[Nm]	[—]	[:1]		[kg]	[N]	[N]
0.09	89	8.7	9.2	15.29	**BK06-../D04LA4**	7.6	1020	-
0.09	75	10.3	7.8	18.00	**BK06-../D04LA4**	7.6	1080	-
0.09	63	12.2	6.6	21.54	**BK06-../D04LA4**	7.6	1150	-
0.09	52	14.8	5.4	26.36	**BK06-../D04LA4**	7.6	1230	-
0.09	41	18.8	4.3	33.33	**BK06-../D04LA4**	7.6	1320	-
0.09	35.5	21.5	3.7	38.18	**BK06-../D04LA4**	7.6	1380	-
0.09	28.5	26.5	3.0	47.78	**BK06-../D04LA4**	7.6	1500	-
0.09	25	30.5	2.2	54.38	**BK06-../D04LA4**	7.6	1600	-
0.09	21.5	35.5	1.8	63.33	**BK06-../D04LA4**	7.6	1700	-
0.09	13.5	54	2.9	102.5	**BK10-../D06LA4**	23	7000	-
0.09	11.5	63	2.2	120.3	**BK10Z-../D06LA4**	24	7000	-
0.09	9.5	75	2.2	143.2	**BK10Z-../D06LA4**	24	7000	-
0.09	8.0	89	2.2	170.6	**BK10Z-../D06LA4**	24	7000	-
0.09	6.6	106	1.9	204.7	**BK10Z-../D06LA4**	24	7000	-
0.09	5.3	132	1.5	257.9	**BK10Z-../D06LA4**	24	7000	-
0.09	4.5	154	1.2	302.4	**BK10Z-../D06LA4**	24	7000	-
0.09	3.7	188	0.88	373.4	**BK10Z-../D06LA4**	24	7000	-
0.09	3.3	186	1.2	410.8	**BK10G06-../D06LA4**	28	7000	-
0.09	3.0	205	1.05	459.2	**BK10G06-../D06LA4**	28	7000	-
0.09	2.7	225	0.98	501.4	**BK10G06-../D06LA4**	28	7000	-
0.09	2.5	245	0.9	552.3	**BK10G06-../D06LA4**	28	7000	-
0.09	6.6	106	3.1	207.5	**BK20Z-../D06LA4**	34	8700	9000
0.09	5.2	135	2.4	259.9	**BK20Z-../D06LA4**	34	8700	9000
0.09	4.6	151	2.1	298.2	**BK20Z-../D06LA4**	34	8700	9000
0.09	3.7	185	1.6	367.7	**BK20Z-../D06LA4**	34	8700	9000
0.09	3.2	192	1.9	429.7	**BK20G06-../D06LA4**	38	8700	9000
0.09	2.9	210	1.7	480.4	**BK20G06-../D06LA4**	38	8700	9000
0.09	2.6	235	1.55	524.5	**BK20G06-../D06LA4**	38	8700	9000
0.09	2.2	280	1.3	630.0	**BK20G06-../D06LA4**	38	8700	9000

The torques marked (*) are maximum permissible torques for service factor f_B=1,0.

0.09 kW

P_N	50 Hz			i	Type	m		
	n_2	M_2	f_B					
[kW]	[1/min]	[Nm]	[—]	[:1]		[kg]	[N]	[N]
0.09	1.8	345	1.05	757.0	**BK20G06-../D06LA4**	38	8700	9000
0.09	1.6	385	0.94	891.2	**BK20G06-../D06LA4**	38	8700	9000
0.09	4.4	160	2.4	308.3	**BK30Z-../D06LA4**	41	11200	12000
0.09	3.6	193	2.1	380.7	**BK30Z-../D06LA4**	41	11200	12000
0.09	3.1	220	1.75	441.3	**BK30Z-../D06LA4**	41	11200	12000
0.09	2.9	210	2.3	471.5	**BK30G06-../D06LA4**	44	11200	12000
0.09	2.4	255	1.9	567.0	**BK30G06-../D06LA4**	44	11200	12000
0.09	2.1	295	1.65	652.5	**BK30G06-../D06LA4**	44	11200	12000
0.09	1.9	325	1.5	743.0	**BK30G06-../D06LA4**	44	11200	12000
0.09	1.7	365	1.35	810.9	**BK30G06-../D06LA4**	44	11200	12000
0.09	1.5	410	1.2	954.1	**BK30G06-../D06LA4**	44	11200	12000
0.09	1.2	510	0.96	1142	**BK30G06-../D06LA4**	44	11200	12000
0.09	1.1	560	0.88	1281	**BK30G06-../D06LA4**	44	11200	12000
0.09	3.9	178	3.3	348.7	**BK40Z-../D06LA4**	64	11700	17000
0.09	3.2	210	2.7	430.0	**BK40Z-../D06LA4**	64	11700	17000
0.09	1.8	295	2.9	756.7	**BK40G10-../D06LA4**	68	11700	17000
0.09	1.7	320	2.7	838.4	**BK40G10-../D06LA4**	68	11700	17000
0.09	1.4	400	2.1	998.3	**BK40G10-../D06LA4**	68	11700	17000
0.09	1.2	475	1.8	1189	**BK40G10-../D06LA4**	68	11700	17000
0.09	0.95	610	1.4	1428	**BK40G10-../D06LA4**	68	11700	17000
0.09	0.8	730	1.15	1798	**BK40G10-../D06LA4**	68	11700	17000
0.09	1.6	350	3.3	859.8	**BK50G10-../D06LA4**	96	14100	111000
0.09	1.4	410	2.8	1024	**BK50G10-../D06LA4**	96	14100	111000
0.09	1.1	530	2.2	1230	**BK50G10-../D06LA4**	96	14100	111000
0.09	1.0	590	1.95	1398	**BK50G10-../D06LA4**	96	14100	111000
0.09	0.9	660	1.75	1549	**BK50G10-../D06LA4**	96	14100	111000
0.09	0.75	790	1.45	1816	**BK50G10-../D06LA4**	96	14100	111000
0.09	0.7	850	1.35	2024	**BK50G10-../D06LA4**	96	14100	111000
0.09	0.6	980	1.15	2450	**BK50G10-../D06LA4**	96	14100	111000
0.09	0.7	750	3.3	2010	**BK60G20-../D06LA4**	123	16600	34000
0.09	0.6	930	2.7	2371	**BK60G20-../D06LA4**	123	16600	34000
0.09	0.5	1180	2.1	2733	**BK60G20-../D06LA4**	123	16600	34000
0.09	0.45	1360	1.85	3036	**BK60G20-../D06LA4**	123	16600	34000
0.09	0.39	1650	1.5	3533	**BK60G20-../D06LA4**	123	16600	34000
0.09	0.32	2100	1.2	4239	**BK60G20-../D06LA4**	123	16600	34000
0.09	0.35	1750	3.3	3894	**BK70G20-../D06LA4**	201	24100	50000
0.09	0.3	2150	2.7	4531	**BK70G20-../D06LA4**	201	24100	50000
0.09	0.25	2700	2.1	5436	**BK70G20-../D06LA4**	201	24100	50000
0.09	0.21	3350	1.7	6504	**BK70G20-../D06LA4**	201	24100	50000
0.09	0.17	4350	1.3	8149	**BK70G20-../D06LA4**	201	24100	50000
0.09	0.15	5000	1.15	9351	**BK70G20-../D06LA4**	201	24100	50000

0.11 kW

P_N	50 Hz			i	Type	m		
	n_2	M_2	f_B					
[kW]	[1/min]	[Nm]	[—]	[:1]		[kg]	[N]	[N]
0.11	116	8.3	9.6	11.67	**BK06-../D04LA4**	7.6	930	-
0.11	89	10.7	7.5	15.29	**BK06-../D04LA4**	7.6	1020	-
0.11	75	12.6	6.3	18.00	**BK06-../D04LA4**	7.6	1080	-
0.11	63	15	5.3	21.54	**BK06-../D04LA4**	7.6	1150	-
0.11	52	18.1	4.4	26.36	**BK06-../D04LA4**	7.6	1230	-
0.11	41	23	3.5	33.33	**BK06-../D04LA4**	7.6	1320	-
0.11	35.5	26.5	3.0	38.18	**BK06-../D04LA4**	7.6	1380	-
0.11	28.5	32.5	2.5	47.78	**BK06-../D04LA4**	7.6	1500	-
0.11	25	37	1.85	54.38	**BK06-../D04LA4**	7.6	1600	-
0.11	21.5	43	1.5	63.33	**BK06-../D04LA4**	7.6	1700	-
0.11	11.5	77	1.8	120.3	**BK10Z-../D04LA4**	21	7000	-
0.11	9.5	92	1.75	143.2	**BK10Z-../D04LA4**	21	7000	-
0.11	8.0	108	1.85	170.6	**BK10Z-../D04LA4**	21	7000	-

The torques marked (*) are maximum permissible torques for service factor f_B=1,0.

0.11 kW

P_N	50 Hz			i	Type	m		
	n_2	M_2	f_B					
[kW]	[1/min]	[Nm]	[—]	[:1]		[kg]	[N]	[N]
0.11	6.6	130	1.55	204.7	**BK10Z-../D04LA4**	21	7000	-
0.11	5.3	162	1.25	257.9	**BK10Z-../D04LA4**	21	7000	-
0.11	4.5	189	0.97	302.4	**BK10Z-../D04LA4**	21	7000	-
0.11	4.0	191	1.15	343.2	**BK10G06-../D04LA4**	25	7000	-
0.11	3.3	230	0.96	410.8	**BK10G06-../D04LA4**	25	7000	-
0.11	3.0	255	0.86	459.2	**BK10G06-../D04LA4**	25	7000	-
0.11	2.7	220*	1.0	501.4	**BK10G06-../D04LA4**	25	7000	-
0.11	2.5	220*	1.0	552.3	**BK10G06-../D04LA4**	25	7000	-
0.11	2.2	220*	1.0	635.5	**BK10G06-../D04LA4**	25	7000	-
0.11	1.8	220*	1.0	789.7	**BK10G06-../D04LA4**	25	7000	-
0.11	1.5	220*	1.0	929.3	**BK10G06-../D04LA4**	25	7000	-
0.11	1.3	220*	1.0	1112	**BK10G06-../D04LA4**	25	7000	-
0.11	1.0	220*	1.0	1361	**BK10G06-../D04LA4**	25	7000	-
0.11	0.9	220*	1.0	1577	**BK10G06-../D04LA4**	25	7000	-
0.11	0.7	220*	1.0	1971	**BK10G06-../D04LA4**	25	7000	-
0.11	0.6	220*	1.0	2261	**BK10G06-../D04LA4**	25	7000	-
0.11	0.55	220*	1.0	2467	**BK10G06-../D04LA4**	25	7000	-
0.11	0.48	220*	1.0	2849	**BK10G06-../D04LA4**	25	7000	-
0.11	0.44	220*	1.0	3107	**BK10G06-../D04LA4**	25	7000	-
0.11	0.39	220*	1.0	3537	**BK10G06-../D04LA4**	25	7000	-
0.11	0.33	220*	1.0	4120	**BK10G06-../D04LA4**	25	7000	-
0.11	7.8	111	3.0	173.4	**BK20Z-../D04LA4**	31	8700	9000
0.11	6.6	130	2.5	207.5	**BK20Z-../D04LA4**	31	8700	9000
0.11	5.2	165	2.0	259.9	**BK20Z-../D04LA4**	31	8700	9000
0.11	4.6	184	1.7	298.2	**BK20Z-../D04LA4**	31	8700	9000
0.11	3.7	225	1.3	367.7	**BK20Z-../D04LA4**	31	8700	9000
0.11	3.2	235	1.55	429.7	**BK20G06-../D04LA4**	34	8700	9000
0.11	2.9	260	1.4	480.4	**BK20G06-../D04LA4**	34	8700	9000
0.11	2.6	295	1.2	524.5	**BK20G06-../D04LA4**	34	8700	9000
0.11	2.2	345	1.05	630.0	**BK20G06-../D04LA4**	34	8700	9000
0.11	1.8	425	0.85	757.0	**BK20G06-../D04LA4**	34	8700	9000
0.11	1.6	360*	1.0	891.2	**BK20G06-../D04LA4**	34	8700	9000
0.11	1.3	360*	1.0	1066	**BK20G06-../D04LA4**	34	8700	9000
0.11	1.1	360*	1.0	1305	**BK20G06-../D04LA4**	34	8700	9000
0.11	0.95	360*	1.0	1424	**BK20G06-../D04LA4**	34	8700	9000
0.11	0.85	360*	1.0	1650	**BK20G06-../D04LA4**	34	8700	9000
0.11	0.7	360*	1.0	2062	**BK20G06-../D04LA4**	34	8700	9000
0.11	0.6	360*	1.0	2366	**BK20G06-../D04LA4**	34	8700	9000
0.11	0.55	360*	1.0	2580	**BK20G06-../D04LA4**	34	8700	9000
0.11	0.48	360*	1.0	2831	**BK20G06-../D04LA4**	34	8700	9000
0.11	0.44	360*	1.0	3088	**BK20G06-../D04LA4**	34	8700	9000
0.11	0.39	360*	1.0	3515	**BK20G06-../D04LA4**	34	8700	9000
0.11	0.33	360*	1.0	4094	**BK20G06-../D04LA4**	34	8700	9000
0.11	2.9	260	1.9	471.5	**BK30G06-../D04LA4**	40	11200	12000
0.11	2.4	320	1.55	567.0	**BK30G06-../D04LA4**	40	11200	12000
0.11	2.1	365	1.35	652.5	**BK30G06-../D04LA4**	40	11200	12000
0.11	1.9	405	1.2	743.0	**BK30G06-../D04LA4**	40	11200	12000
0.11	1.7	450	1.1	810.9	**BK30G06-../D04LA4**	40	11200	12000
0.11	1.5	510	0.96	954.1	**BK30G06-../D04LA4**	40	11200	12000
0.11	1.2	490*	1.0	1142	**BK30G06-../D04LA4**	40	11200	12000
0.11	1.1	490*	1.0	1281	**BK30G06-../D04LA4**	40	11200	12000
0.11	0.85	490*	1.0	1620	**BK30G06-../D04LA4**	40	11200	12000
0.11	0.8	490*	1.0	1767	**BK30G06-../D04LA4**	40	11200	12000
0.11	0.7	490*	1.0	2024	**BK30G06-../D04LA4**	40	11200	12000
0.11	0.55	490*	1.0	2533	**BK30G06-../D04LA4**	40	11200	12000
0.11	0.5	490*	1.0	2738	**BK30G06-../D04LA4**	40	11200	12000
0.11	0.46	490*	1.0	2986	**BK30G06-../D04LA4**	40	11200	12000
0.11	0.4	490*	1.0	3399	**BK30G06-../D04LA4**	40	11200	12000
0.11	0.35	490*	1.0	3959	**BK30G06-../D04LA4**	40	11200	12000

The torques marked (*) are maximum permissible torques for service factor f_B=1,0.

0.12 kW

P_N	50 Hz			i	Type	m		
	n_2	M_2	f_B					
[kW]	[1/min]	[Nm]	[—]	[:1]		[kg]	[N]	[N]
0.12	121	8.7	9.2	11.67	**BK06-../DPE05LA4**	9.5	930	-
0.12	92	11.3	7.1	15.29	**BK06-../DPE05LA4**	9.5	1020	-
0.12	79	13	6.2	18.00	**BK06-../DPE05LA4**	9.5	1080	-
0.12	66	15.6	5.1	21.54	**BK06-../DPE05LA4**	9.5	1150	-
0.12	54	19.1	4.2	26.36	**BK06-../DPE05LA4**	9.5	1230	-
0.12	42.5	24	3.3	33.33	**BK06-../DPE05LA4**	9.5	1320	-
0.12	37	27.5	2.9	38.18	**BK06-../DPE05LA4**	9.5	1380	-
0.12	29.5	34.5	2.3	47.78	**BK06-../DPE05LA4**	9.5	1500	-
0.12	26	39	1.75	54.38	**BK06-../DPE05LA4**	9.5	1600	-
0.12	22.5	45	1.4	63.33	**BK06-../DPE05LA4**	9.5	1700	-
0.12	16	62	2.9	89.30	**BK10-../DPE06LA4**	23	7000	-
0.12	14	69	2.3	102.5	**BK10-../DPE06LA4**	23	7000	-
0.12	12	81	1.7	120.3	**BK10Z-../DPE06LA4**	24	7000	-
0.12	9.8	98	1.65	143.2	**BK10Z-../DPE06LA4**	24	7000	-
0.12	8.3	114	1.75	170.6	**BK10Z-../DPE06LA4**	24	7000	-
0.12	6.9	136	1.45	204.7	**BK10Z-../DPE06LA4**	24	7000	-
0.12	5.5	170	1.2	257.9	**BK10Z-../DPE06LA4**	24	7000	-
0.12	4.7	197	0.93	302.4	**BK10Z-../DPE06LA4**	24	7000	-
0.12	4.1	205	1.05	343.2	**BK10G06-../DPE06LA4**	28	7000	-
0.12	3.5	240	0.92	410.8	**BK10G06-../DPE06LA4**	28	7000	-
0.12	3.1	270	0.81	459.2	**BK10G06-../DPE06LA4**	28	7000	-
0.12	2.8	220*	1.0	501.4	**BK10G06-../DPE06LA4**	28	7000	-
0.12	2.6	220*	1.0	552.3	**BK10G06-../DPE06LA4**	28	7000	-
0.12	2.3	220*	1.0	635.5	**BK10G06-../DPE06LA4**	28	7000	-
0.12	1.8	220*	1.0	789.7	**BK10G06-../DPE06LA4**	28	7000	-
0.12	1.6	220*	1.0	929.3	**BK10G06-../DPE06LA4**	28	7000	-
0.12	1.3	220*	1.0	1112	**BK10G06-../DPE06LA4**	28	7000	-
0.12	1.1	220*	1.0	1361	**BK10G06-../DPE06LA4**	28	7000	-
0.12	0.9	220*	1.0	1577	**BK10G06-../DPE06LA4**	28	7000	-
0.12	0.75	220*	1.0	1971	**BK10G06-../DPE06LA4**	28	7000	-
0.12	0.65	220*	1.0	2261	**BK10G06-../DPE06LA4**	28	7000	-
0.12	0.6	220*	1.0	2467	**BK10G06-../DPE06LA4**	28	7000	-
0.12	0.5	220*	1.0	2849	**BK10G06-../DPE06LA4**	28	7000	-
0.12	0.46	220*	1.0	3107	**BK10G06-../DPE06LA4**	28	7000	-
0.12	0.4	220*	1.0	3537	**BK10G06-../DPE06LA4**	28	7000	-
0.12	0.34	220*	1.0	4120	**BK10G06-../DPE06LA4**	28	7000	-
0.12	9.7	99	3.3	144.5	**BK20Z-../DPE06LA4**	34	8700	9000
0.12	8.1	117	2.8	173.4	**BK20Z-../DPE06LA4**	34	8700	9000
0.12	6.8	138	2.4	207.5	**BK20Z-../DPE06LA4**	34	8700	9000
0.12	5.4	174	1.9	259.9	**BK20Z-../DPE06LA4**	34	8700	9000
0.12	4.7	197	1.6	298.2	**BK20Z-../DPE06LA4**	34	8700	9000
0.12	3.9	235	1.25	367.7	**BK20Z-../DPE06LA4**	34	8700	9000
0.12	3.3	255	1.4	429.7	**BK20G06-../DPE06LA4**	38	8700	9000
0.12	3.0	280	1.3	480.4	**BK20G06-../DPE06LA4**	38	8700	9000
0.12	2.7	310	1.15	524.5	**BK20G06-../DPE06LA4**	38	8700	9000
0.12	2.3	365	0.99	630.0	**BK20G06-../DPE06LA4**	38	8700	9000
0.12	1.9	440	0.82	757.0	**BK20G06-../DPE06LA4**	38	8700	9000
0.12	1.6	360*	1.0	891.2	**BK20G06-../DPE06LA4**	38	8700	9000
0.12	1.4	360*	1.0	1066	**BK20G06-../DPE06LA4**	38	8700	9000
0.12	1.1	360*	1.0	1305	**BK20G06-../DPE06LA4**	38	8700	9000
0.12	1.0	360*	1.0	1424	**BK20G06-../DPE06LA4**	38	8700	9000
0.12	0.85	360*	1.0	1650	**BK20G06-../DPE06LA4**	38	8700	9000
0.12	0.7	360*	1.0	2062	**BK20G06-../DPE06LA4**	38	8700	9000
0.12	0.6	360*	1.0	2366	**BK20G06-../DPE06LA4**	38	8700	9000
0.12	0.55	360*	1.0	2580	**BK20G06-../DPE06LA4**	38	8700	9000
0.12	0.5	360*	1.0	2831	**BK20G06-../DPE06LA4**	38	8700	9000
0.12	0.46	360*	1.0	3088	**BK20G06-../DPE06LA4**	38	8700	9000
0.12	0.4	360*	1.0	3515	**BK20G06-../DPE06LA4**	38	8700	9000
0.12	0.35	360*	1.0	4094	**BK20G06-../DPE06LA4**	38	8700	9000
0.12	6.5	144	3.1	216.5	**BK30Z-../DPE06LA4**	41	11200	12000
0.12	5.5	170	2.6	255.3	**BK30Z-../DPE06LA4**	41	11200	12000
0.12	4.6	200	1.95	308.3	**BK30Z-../DPE06LA4**	41	11200	12000
0.12	3.7	250	1.6	380.7	**BK30Z-../DPE06LA4**	41	11200	12000
0.12	3.2	285	1.35	441.3	**BK30Z-../DPE06LA4**	41	11200	12000
0.12	3.0	280	1.75	471.5	**BK30G06-../DPE06LA4**	44	11200	12000
0.12	2.5	335	1.45	567.0	**BK30G06-../DPE06LA4**	44	11200	12000
0.12	2.2	380	1.3	652.5	**BK30G06-../DPE06LA4**	44	11200	12000

The torques marked (*) are maximum permissible torques for service factor f_B=1,0.

0.12 kW

P_N	50 Hz			i	Type	m		
	n_2	M_2	f_B					
[kW]	[1/min]	[Nm]	[—]	[:1]		[kg]	[N]	[N]
0.12	1.9	440	1.1	743.0	**BK30G06-../DPE06LA4**	44	11200	12000
0.12	1.8	470	1.05	810.9	**BK30G06-../DPE06LA4**	44	11200	12000
0.12	1.5	560	0.88	954.1	**BK30G06-../DPE06LA4**	44	11200	12000
0.12	1.3	490*	1.0	1142	**BK30G06-../DPE06LA4**	44	11200	12000
0.12	1.1	490*	1.0	1281	**BK30G06-../DPE06LA4**	44	11200	12000
0.12	0.9	490*	1.0	1620	**BK30G06-../DPE06LA4**	44	11200	12000
0.12	0.8	490*	1.0	1767	**BK30G06-../DPE06LA4**	44	11200	12000
0.12	0.7	490*	1.0	2024	**BK30G06-../DPE06LA4**	44	11200	12000
0.12	0.6	490*	1.0	2533	**BK30G06-../DPE06LA4**	44	11200	12000
0.12	0.55	490*	1.0	2738	**BK30G06-../DPE06LA4**	44	11200	12000
0.12	0.47	490*	1.0	2986	**BK30G06-../DPE06LA4**	44	11200	12000
0.12	0.42	490*	1.0	3399	**BK30G06-../DPE06LA4**	44	11200	12000
0.12	0.36	490*	1.0	3959	**BK30G06-../DPE06LA4**	44	11200	12000
0.12	4.1	225	2.6	348.7	**BK40Z-../DPE06LA4**	64	11700	17000
0.12	3.3	275	2.1	430.0	**BK40Z-../DPE06LA4**	64	11700	17000
0.12	2.6	275	3.1	540.0	**BK40G10-../DPE06LA4**	68	11700	17000
0.12	2.2	335	2.5	660.2	**BK40G10-../DPE06LA4**	68	11700	17000
0.12	1.9	395	2.2	756.7	**BK40G10-../DPE06LA4**	68	11700	17000
0.12	1.7	445	1.9	838.4	**BK40G10-../DPE06LA4**	68	11700	17000
0.12	1.5	520	1.65	998.3	**BK40G10-../DPE06LA4**	68	11700	17000
0.12	1.2	650	1.3	1189	**BK40G10-../DPE06LA4**	68	11700	17000
0.12	1.0	790	1.1	1428	**BK40G10-../DPE06LA4**	68	11700	17000
0.12	0.8	850*	1.0	1798	**BK40G10-../DPE06LA4**	68	11700	17000
0.12	0.7	850*	1.0	2108	**BK40G10-../DPE06LA4**	68	11700	17000
0.12	0.6	850*	1.0	2350	**BK40G10-../DPE06LA4**	68	11700	17000
0.12	0.55	850*	1.0	2604	**BK40G10-../DPE06LA4**	68	11700	17000
0.12	0.46	850*	1.0	3077	**BK40G10-../DPE06LA4**	68	11700	17000
0.12	0.41	850*	1.0	3429	**BK40G10-../DPE06LA4**	68	11700	17000
0.12	0.37	850*	1.0	3800	**BK40G10-../DPE06LA4**	68	11700	17000
0.12	0.33	850*	1.0	4363	**BK40G10-../DPE06LA4**	68	11700	17000
0.12	3.4	265	3.2	414.8	**BK50Z-../DPE06LA4**	92	14100	26000
0.12	2.0	380	3.0	722.2	**BK50G10-../DPE06LA4**	96	14100	111000
0.12	1.7	460	2.5	859.8	**BK50G10-../DPE06LA4**	96	14100	111000
0.12	1.4	560	2.1	1024	**BK50G10-../DPE06LA4**	96	14100	111000
0.12	1.2	670	1.7	1230	**BK50G10-../DPE06LA4**	96	14100	111000
0.12	1.1	730	1.6	1398	**BK50G10-../DPE06LA4**	96	14100	111000
0.12	0.95	850	1.35	1549	**BK50G10-../DPE06LA4**	96	14100	111000
0.12	0.8	1010	1.15	1816	**BK50G10-../DPE06LA4**	96	14100	111000
0.12	0.7	1150*	1.0	2024	**BK50G10-../DPE06LA4**	96	14100	111000
0.12	0.6	1150*	1.0	2450	**BK50G10-../DPE06LA4**	96	14100	111000
0.12	0.55	1150*	1.0	2730	**BK50G10-../DPE06LA4**	96	14100	111000
0.12	0.47	1150*	1.0	3025	**BK50G10-../DPE06LA4**	96	14100	111000
0.12	0.41	1150*	1.0	3492	**BK50G10-../DPE06LA4**	96	14100	111000
0.12	0.37	1150*	1.0	3870	**BK50G10-../DPE06LA4**	96	14100	111000
0.12	0.32	1150*	1.0	4443	**BK50G10-../DPE06LA4**	96	14100	111000
0.12	0.9	860	2.9	1618	**BK60G20-../DPE06LA4**	123	16600	34000
0.12	0.8	970	2.6	1810	**BK60G20-../DPE06LA4**	123	16600	34000
0.12	0.7	1160	2.2	2010	**BK60G20-../DPE06LA4**	123	16600	34000
0.12	0.6	1400	1.8	2371	**BK60G20-../DPE06LA4**	123	16600	34000
0.12	0.55	1540	1.6	2733	**BK60G20-../DPE06LA4**	123	16600	34000
0.12	0.47	1890	1.3	3036	**BK60G20-../DPE06LA4**	123	16600	34000
0.12	0.4	2300	1.1	3533	**BK60G20-../DPE06LA4**	123	16600	34000
0.12	0.34	2500*	1.0	4239	**BK60G20-../DPE06LA4**	123	16600	34000
0.12	0.28	2500*	1.0	5072	**BK60G20-../DPE06LA4**	123	16600	34000
0.12	0.25	2500*	1.0	5721	**BK60G20-../DPE06LA4**	123	16600	34000
0.12	0.22	2500*	1.0	6565	**BK60G20-../DPE06LA4**	123	16600	34000
0.12	0.2	2500*	1.0	7291	**BK60G20-../DPE06LA4**	123	16600	34000
0.12	0.18	2500*	1.0	8093	**BK60G20-../DPE06LA4**	123	16600	34000
0.12	0.16	2500*	1.0	8990	**BK60G20-../DPE06LA4**	123	16600	34000
0.12	0.47	1790	3.2	3041	**BK70G20-../DPE06LA4**	201	24100	50000
0.12	0.4	2150	2.7	3505	**BK70G20-../DPE06LA4**	201	24100	50000
0.12	0.36	2450	2.3	3894	**BK70G20-../DPE06LA4**	201	24100	50000
0.12	0.31	2950	1.95	4531	**BK70G20-../DPE06LA4**	201	24100	50000
0.12	0.26	3700	1.55	5436	**BK70G20-../DPE06LA4**	201	24100	50000
0.12	0.22	4500	1.25	6504	**BK70G20-../DPE06LA4**	201	24100	50000
0.12	0.18	5600	1.0	8149	**BK70G20-../DPE06LA4**	201	24100	50000

The torques marked (*) are maximum permissible torques for service factor f_B=1,0.

0.12 kW

P_N	50 Hz			i	Type	m		
	n_2	M_2	f_B					
[kW]	[1/min]	[Nm]	[—]	[:1]		[kg]	[N]	[N]
0.12	0.15	5700*	1.0	9351	**BK70G20-../DPE06LA4**	201	24100	50000

0.18 kW

P_N	50 Hz			i	Type	m		
	n_2	M_2	f_B					
[kW]	[1/min]	[Nm]	[—]	[:1]		[kg]	[N]	[N]
0.18	145	10.9	7.3	9.71	**BK06-../DPE07LA4**	14	880	-
0.18	120	13.1	6.1	11.67	**BK06-../DPE07LA4**	14	930	-
0.18	92	17	4.7	15.29	**BK06-../DPE07LA4**	14	1020	-
0.18	78	19.8	4.0	18.00	**BK06-../DPE07LA4**	14	1080	-
0.18	65	23.5	3.4	21.54	**BK06-../DPE07LA4**	14	1150	-
0.18	54	28.5	2.8	26.36	**BK06-../DPE07LA4**	14	1230	-
0.18	42.5	36	2.2	33.33	**BK06-../DPE07LA4**	14	1320	-
0.18	37	41.5	1.95	38.18	**BK06-../DPE07LA4**	14	1380	-
0.18	29.5	51	1.55	47.78	**BK06-../DPE07LA4**	14	1500	-
0.18	26	58	1.15	54.38	**BK06-../DPE07LA4**	14	1600	-
0.18	22.5	67	0.95	63.33	**BK06-../DPE07LA4**	14	1700	-
0.18	23	66	3.0	61.68	**BK10-../DPE07LA4**	26	7000	-
0.18	19.5	77	2.6	72.31	**BK10-../DPE07LA4**	26	7000	-
0.18	16	93	1.9	89.30	**BK10-../DPE07LA4**	26	7000	-
0.18	14	104	1.5	102.5	**BK10-../DPE07LA4**	26	7000	-
0.18	12	121	1.15	120.3	**BK10Z-../DPE07LA4**	27	7000	-
0.18	9.8	147	1.1	143.2	**BK10Z-../DPE07LA4**	27	7000	-
0.18	8.3	171	1.15	170.6	**BK10Z-../DPE07LA4**	27	7000	-
0.18	6.9	200	1.0	204.7	**BK10Z-../DPE07LA4**	27	7000	-
0.18	13	113	2.8	108.6	**BK20-../DPE07LA4**	35	8700	9000
0.18	11.5	127	2.6	124.2	**BK20Z-../DPE07LA4**	37	8700	9000
0.18	9.7	148	2.2	144.5	**BK20Z-../DPE07LA4**	37	8700	9000
0.18	8.1	176	1.9	173.4	**BK20Z-../DPE07LA4**	37	8700	9000
0.18	6.8	205	1.6	207.5	**BK20Z-../DPE07LA4**	37	8700	9000
0.18	5.4	260	1.25	259.9	**BK20Z-../DPE07LA4**	37	8700	9000
0.18	4.7	295	1.05	298.2	**BK20Z-../DPE07LA4**	37	8700	9000
0.18	3.9	350	0.83	367.7	**BK20Z-../DPE07LA4**	37	8700	9000
0.18	3.3	390	0.92	429.7	**BK20G06-../DPE07LA4**	40	8700	9000
0.18	3.0	430	0.84	480.4	**BK20G06-../DPE07LA4**	40	8700	9000
0.18	9.7	148	3.0	145.1	**BK30Z-../DPE07LA4**	44	11200	12000
0.18	7.6	187	2.4	184.8	**BK30Z-../DPE07LA4**	44	11200	12000
0.18	6.5	215	2.1	216.5	**BK30Z-../DPE07LA4**	44	11200	12000
0.18	5.5	255	1.75	255.3	**BK30Z-../DPE07LA4**	44	11200	12000
0.18	4.6	305	1.25	308.3	**BK30Z-../DPE07LA4**	44	11200	12000
0.18	3.7	375	1.05	380.7	**BK30Z-../DPE07LA4**	44	11200	12000
0.18	3.2	425	0.9	441.3	**BK30Z-../DPE07LA4**	44	11200	12000
0.18	3.0	430	1.15	471.5	**BK30G06-../DPE07LA4**	46	11200	12000
0.18	2.5	510	0.96	567.0	**BK30G06-../DPE07LA4**	46	11200	12000
0.18	2.2	580	0.84	652.5	**BK30G06-../DPE07LA4**	46	11200	12000
0.18	5.7	240	3.3	246.6	**BK40Z-../DPE07LA4**	66	11700	17000
0.18	4.9	280	2.4	289.8	**BK40Z-../DPE07LA4**	66	11700	17000
0.18	4.1	335	1.75	348.7	**BK40Z-../DPE07LA4**	66	11700	17000
0.18	3.3	415	1.4	430.0	**BK40Z-../DPE07LA4**	66	11700	17000
0.18	2.9	400	2.1	487.3	**BK40G10-../DPE07LA4**	71	11700	17000
0.18	2.6	450	1.9	540.0	**BK40G10-../DPE07LA4**	71	11700	17000
0.18	2.2	540	1.55	660.2	**BK40G10-../DPE07LA4**	71	11700	17000
0.18	1.9	630	1.35	756.7	**BK40G10-../DPE07LA4**	71	11700	17000
0.18	1.7	710	1.2	838.4	**BK40G10-../DPE07LA4**	71	11700	17000
0.18	1.5	810	1.05	998.3	**BK40G10-../DPE07LA4**	71	11700	17000
0.18	1.2	1020	0.83	1189	**BK40G10-../DPE07LA4**	71	11700	17000
0.18	4.3	320	3.2	328.2	**BK50Z-../DPE07LA4**	95	14100	26000
0.18	3.4	400	2.1	414.8	**BK50Z-../DPE07LA4**	95	14100	26000
0.18	3.1	380	3.0	465.1	**BK50G10-../DPE07LA4**	99	14100	111000
0.18	2.8	425	2.7	513.4	**BK50G10-../DPE07LA4**	99	14100	111000

The torques marked (*) are maximum permissible torques for service factor f_B=1,0.

0.18 kW

P_N	50 Hz			i	Type	m		
	n_2	M_2	f_B					
[kW]	[1/min]	[Nm]	[—]	[:1]		[kg]	[N]	[N]
0.18	2.5	475	2.4	568.6	**BK50G10-../DPE07LA4**	99	14100	111000
0.18	2.2	540	2.1	651.7	**BK50G10-../DPE07LA4**	99	14100	111000
0.18	2.0	600	1.9	722.2	**BK50G10-../DPE07LA4**	99	14100	111000
0.18	1.7	720	1.6	859.8	**BK50G10-../DPE07LA4**	99	14100	111000
0.18	1.4	880	1.3	1024	**BK50G10-../DPE07LA4**	99	14100	111000
0.18	1.2	1030	1.1	1230	**BK50G10-../DPE07LA4**	99	14100	111000
0.18	1.1	1130	1.0	1398	**BK50G10-../DPE07LA4**	99	14100	111000
0.18	1.4	920	2.7	1016	**BK60G20-../DPE07LA4**	125	16600	34000
0.18	1.1	1220	2.0	1322	**BK60G20-../DPE07LA4**	125	16600	34000
0.18	0.9	1500	1.65	1618	**BK60G20-../DPE07LA4**	125	16600	34000
0.18	0.8	1690	1.5	1810	**BK60G20-../DPE07LA4**	125	16600	34000
0.18	0.7	1980	1.25	2010	**BK60G20-../DPE07LA4**	125	16600	34000
0.18	0.6	2350	1.05	2371	**BK60G20-../DPE07LA4**	125	16600	34000
0.18	0.7	1940	2.9	2040	**BK70G20-../DPE07LA4**	204	24100	50000
0.18	0.55	2500	2.3	2578	**BK70G20-../DPE07LA4**	204	24100	50000
0.18	0.47	3000	1.9	3041	**BK70G20-../DPE07LA4**	204	24100	50000
0.18	0.4	3600	1.6	3505	**BK70G20-../DPE07LA4**	204	24100	50000
0.18	0.36	4050	1.4	3894	**BK70G20-../DPE07LA4**	204	24100	50000
0.18	0.31	4800	1.2	4531	**BK70G20-../DPE07LA4**	204	24100	50000

0.25 kW

P_N	50 Hz			i	Type	m		
	n_2	M_2	f_B					
[kW]	[1/min]	[Nm]	[—]	[:1]		[kg]	[N]	[N]
0.25	199	11	6.6	7.25	**BK06-../DPE08MA4**	15	800	-
0.25	149	14.7	5.4	9.71	**BK06-../DPE08MA4**	15	880	-
0.25	124	17.7	4.5	11.67	**BK06-../DPE08MA4**	15	930	-
0.25	95	22.5	3.6	15.29	**BK06-../DPE08MA4**	15	1020	-
0.25	80	26.5	3.0	18.00	**BK06-../DPE08MA4**	15	1080	-
0.25	67	32	2.5	21.54	**BK06-../DPE08MA4**	15	1150	-
0.25	55	39	2.1	26.36	**BK06-../DPE08MA4**	15	1230	-
0.25	43.5	49	1.65	33.33	**BK06-../DPE08MA4**	15	1320	-
0.25	38	56	1.45	38.18	**BK06-../DPE08MA4**	15	1380	-
0.25	30.5	69	1.15	47.78	**BK06-../DPE08MA4**	15	1500	-
0.25	35.5	60	3.3	40.79	**BK10-../DPE08MA4**	27	6000	-
0.25	29.5	72	2.8	48.96	**BK10-../DPE08MA4**	27	6400	-
0.25	23.5	90	2.2	61.68	**BK10-../DPE08MA4**	27	7000	-
0.25	20	105	1.9	72.31	**BK10-../DPE08MA4**	27	7000	-
0.25	16.5	125	1.4	89.30	**BK10-../DPE08MA4**	27	7000	-
0.25	12	169	0.81	120.3	**BK10Z-../DPE08MA4**	28	7000	-
0.25	10.5	191	0.85	143.2	**BK10Z-../DPE08MA4**	28	7000	-
0.25	8.5	230	0.87	170.6	**BK10Z-../DPE08MA4**	28	7000	-
0.25	19	110	3.0	76.79	**BK20-../DPE08MA4**	36	7500	9000
0.25	16.5	125	2.6	88.12	**BK20-../DPE08MA4**	36	8000	9000
0.25	13.5	152	2.1	108.6	**BK20-../DPE08MA4**	36	8700	9000
0.25	12	169	1.95	124.2	**BK20Z-../DPE08MA4**	38	8700	9000
0.25	10	200	1.65	144.5	**BK20Z-../DPE08MA4**	38	8700	9000
0.25	8.4	235	1.4	173.4	**BK20Z-../DPE08MA4**	38	8700	9000
0.25	7.0	275	1.2	207.5	**BK20Z-../DPE08MA4**	38	8700	9000
0.25	5.6	345	0.96	259.9	**BK20Z-../DPE08MA4**	38	8700	9000
0.25	4.9	390	0.8	298.2	**BK20Z-../DPE08MA4**	38	8700	9000
0.25	4.1	445	0.81	359.1	**BK20G06-../DPE08MA4**	44	8700	9000
0.25	14.5	139	3.2	102.4	**BK30-../DPE08MA4**	42	11200	12000
0.25	12	169	2.7	123.9	**BK30Z-../DPE08MA4**	45	11200	12000
0.25	10	200	2.3	145.1	**BK30Z-../DPE08MA4**	45	11200	12000
0.25	7.8	250	1.8	184.8	**BK30Z-../DPE08MA4**	45	11200	12000
0.25	6.7	290	1.55	216.5	**BK30Z-../DPE08MA4**	45	11200	12000
0.25	5.7	340	1.3	255.3	**BK30Z-../DPE08MA4**	45	11200	12000
0.25	4.7	415	0.93	308.3	**BK30Z-../DPE08MA4**	45	11200	12000
0.25	3.8	500	0.81	380.7	**BK30Z-../DPE08MA4**	45	11200	12000

The torques marked (*) are maximum permissible torques for service factor f_B=1,0.

0.25 kW

P_N	50 Hz			i	Type	m		
	n_2	M_2	f_B					
[kW]	[1/min]	[Nm]	[—]	[:1]		[kg]	[N]	[N]
0.25	3.1	590	0.83	471.5	**BK30G06-../DPE08MA4**	50	11200	12000
0.25	6.9	280	2.8	211.5	**BK40Z-../DPE08MA4**	67	11700	17000
0.25	5.9	325	2.4	246.6	**BK40Z-../DPE08MA4**	67	11700	17000
0.25	5.0	385	1.8	289.8	**BK40Z-../DPE08MA4**	67	11700	17000
0.25	4.2	460	1.25	348.7	**BK40Z-../DPE08MA4**	67	11700	17000
0.25	3.4	560	1.0	430.0	**BK40Z-../DPE08MA4**	67	11700	17000
0.25	3.0	560	1.5	487.3	**BK40G10-../DPE08MA4**	72	11700	17000
0.25	2.7	630	1.35	540.0	**BK40G10-../DPE08MA4**	72	11700	17000
0.25	2.2	770	1.1	660.2	**BK40G10-../DPE08MA4**	72	11700	17000
0.25	2.0	860	0.99	756.7	**BK40G10-../DPE08MA4**	72	11700	17000
0.25	1.8	960	0.89	838.4	**BK40G10-../DPE08MA4**	72	11700	17000
0.25	5.5	350	3.0	264.5	**BK50Z-../DPE08MA4**	96	14100	26000
0.25	4.4	435	2.3	328.2	**BK50Z-../DPE08MA4**	96	14100	26000
0.25	3.5	540	1.55	414.8	**BK50Z-../DPE08MA4**	96	14100	26000
0.25	3.1	550	2.1	465.1	**BK50G10-../DPE08MA4**	100	14100	111000
0.25	2.9	590	1.95	513.4	**BK50G10-../DPE08MA4**	100	14100	111000
0.25	2.6	660	1.75	568.6	**BK50G10-../DPE08MA4**	100	14100	111000
0.25	2.3	750	1.55	651.7	**BK50G10-../DPE08MA4**	100	14100	111000
0.25	2.0	860	1.35	722.2	**BK50G10-../DPE08MA4**	100	14100	111000
0.25	1.7	1020	1.15	859.8	**BK50G10-../DPE08MA4**	100	14100	111000
0.25	1.5	1170	0.98	1024	**BK50G10-../DPE08MA4**	100	14100	111000
0.25	3.2	740	3.1	460.4	**BK60Z-../DPE08MA4**	119	16600	34000
0.25	2.9	820	2.8	498.0	**BK60Z-../DPE08MA4**	119	16600	34000
0.25	2.6	910	2.5	557.2	**BK60Z-../DPE08MA4**	119	16600	34000
0.25	2.0	870	2.9	752.1	**BK60G20-../DPE08MA4**	126	16600	34000
0.25	1.7	1070	2.3	887.8	**BK60G20-../DPE08MA4**	126	16600	34000
0.25	1.5	1290	1.95	1016	**BK60G20-../DPE08MA4**	126	16600	34000
0.25	1.1	1830	1.35	1322	**BK60G20-../DPE08MA4**	126	16600	34000
0.25	0.9	2200	1.15	1618	**BK60G20-../DPE08MA4**	126	16600	34000
0.25	1.0	1950	2.9	1457	**BK70G20-../DPE08MA4**	205	24100	50000
0.25	0.85	2350	2.4	1696	**BK70G20-../DPE08MA4**	205	24100	50000
0.25	0.75	2650	2.2	2040	**BK70G20-../DPE08MA4**	205	24100	50000
0.25	0.6	3350	1.7	2578	**BK70G20-../DPE08MA4**	205	24100	50000
0.25	0.48	4300	1.35	3041	**BK70G20-../DPE08MA4**	205	24100	50000
0.25	0.42	4950	1.15	3505	**BK70G20-../DPE08MA4**	205	24100	50000
0.25	0.47	3600	3.2	3120	**BK80G40-../DPE08MA4**	347	30000	75000
0.25	0.39	4650	2.5	3776	**BK80G40-../DPE08MA4**	347	30000	75000
0.25	0.33	5700	2.0	4461	**BK80G40-../DPE08MA4**	347	30000	75000
0.25	0.29	6700	1.7	5032	**BK80G40-../DPE08MA4**	347	30000	75000
0.25	0.25	8000	1.45	5865	**BK80G40-../DPE08MA4**	347	30000	75000
0.25	0.21	9900	1.15	6893	**BK80G40-../DPE08MA4**	347	30000	75000
0.25	0.19	11100	1.05	7652	**BK80G40-../DPE08MA4**	347	30000	75000
0.25	0.3	5800	3.2	4952	**BK90G50-../DPE08MA4**	620	49400	120000
0.25	0.27	6700	2.8	5491	**BK90G50-../DPE08MA4**	620	49400	120000
0.25	0.23	8200	2.3	6335	**BK90G50-../DPE08MA4**	620	49400	120000
0.25	0.21	9200	2.0	7022	**BK90G50-../DPE08MA4**	620	49400	120000
0.25	0.19	10400	1.8	7862	**BK90G50-../DPE08MA4**	620	49400	120000
0.25	0.15	13800	1.35	9935	**BK90G50-../DPE08MA4**	620	49400	120000

0.37 kW

P_N	50 Hz			i	Type	m		
	n_2	M_2	f_B					
[kW]	[1/min]	[Nm]	[—]	[:1]		[kg]	[N]	[N]
0.37	200	16.2	4.5	7.25	**BK06-../DPE08LA4**	16	800	-
0.37	149	21.5	3.7	9.71	**BK06-../DPE08LA4**	16	880	-
0.37	124	26	3.1	11.67	**BK06-../DPE08LA4**	16	930	-
0.37	95	33.5	2.4	15.29	**BK06-../DPE08LA4**	16	1020	-
0.37	81	39	2.1	18.00	**BK06-../DPE08LA4**	16	1080	-
0.37	68	46.5	1.7	21.54	**BK06-../DPE08LA4**	16	1150	-

The torques marked (*) are maximum permissible torques for service factor f_B=1,0.

0.37 kW

P_N	50 Hz			i	Type	m		
	n_2	M_2	f_B					
[kW]	[1/min]	[Nm]	[—]	[:1]		[kg]	[N]	[N]
0.37	55	57	1.4	26.36	**BK06-../DPE08LA4**	16	1230	-
0.37	43.5	73	1.1	33.33	**BK06-../DPE08LA4**	16	1320	-
0.37	38	83	0.96	38.18	**BK06-../DPE08LA4**	16	1380	-
0.37	51	62	3.2	28.76	**BK10-../DPE08LA4**	28	5200	-
0.37	42.5	74	2.7	34.25	**BK10-../DPE08LA4**	28	5600	-
0.37	35.5	89	2.2	40.79	**BK10-../DPE08LA4**	28	6000	-
0.37	30	104	1.9	48.96	**BK10-../DPE08LA4**	28	6400	-
0.37	23.5	133	1.5	61.68	**BK10-../DPE08LA4**	28	7000	-
0.37	20	155	1.3	72.31	**BK10-../DPE08LA4**	28	7000	-
0.37	16.5	186	0.96	89.30	**BK10-../DPE08LA4**	28	7000	-
0.37	28.5	110	3.0	51.22	**BK20-../DPE08LA4**	38	6300	9000
0.37	24	131	2.5	61.30	**BK20-../DPE08LA4**	38	6500	9000
0.37	19	163	2.0	76.79	**BK20-../DPE08LA4**	38	7500	9000
0.37	16.5	186	1.75	88.12	**BK20-../DPE08LA4**	38	8000	9000
0.37	13.5	225	1.4	108.6	**BK20-../DPE08LA4**	38	8700	9000
0.37	12	250	1.3	124.2	**BK20Z-../DPE08LA4**	40	8700	9000
0.37	10	295	1.1	144.5	**BK20Z-../DPE08LA4**	40	8700	9000
0.37	8.4	345	0.96	173.4	**BK20Z-../DPE08LA4**	40	8700	9000
0.37	7.0	410	0.8	207.5	**BK20Z-../DPE08LA4**	40	8700	9000
0.37	20.5	149	3.0	71.56	**BK30-../DPE08LA4**	44	9700	12000
0.37	16.5	184	2.4	88.38	**BK30-../DPE08LA4**	44	10600	12000
0.37	14.5	205	2.2	102.4	**BK30-../DPE08LA4**	44	11200	12000
0.37	12	250	1.8	123.9	**BK30Z-../DPE08LA4**	46	11200	12000
0.37	10	295	1.55	145.1	**BK30Z-../DPE08LA4**	46	11200	12000
0.37	7.9	370	1.2	184.8	**BK30Z-../DPE08LA4**	46	11200	12000
0.37	6.7	430	1.05	216.5	**BK30Z-../DPE08LA4**	46	11200	12000
0.37	5.7	500	0.9	255.3	**BK30Z-../DPE08LA4**	46	11200	12000
0.37	12.5	240	3.3	118.2	**BK40Z-../DPE08LA4**	69	11700	17000
0.37	10.5	280	2.8	143.0	**BK40Z-../DPE08LA4**	69	11700	17000
0.37	8.6	340	2.3	169.0	**BK40Z-../DPE08LA4**	69	11700	17000
0.37	6.9	415	1.9	211.5	**BK40Z-../DPE08LA4**	69	11700	17000
0.37	5.9	485	1.6	246.6	**BK40Z-../DPE08LA4**	69	11700	17000
0.37	5.0	570	1.2	289.8	**BK40Z-../DPE08LA4**	69	11700	17000
0.37	4.2	680	0.85	348.7	**BK40Z-../DPE08LA4**	69	11700	17000
0.37	3.0	870	0.98	487.3	**BK40G10-../DPE08LA4**	73	11700	17000
0.37	2.7	960	0.89	540.0	**BK40G10-../DPE08LA4**	73	11700	17000
0.37	7.0	410	2.6	206.8	**BK50Z-../DPE08LA4**	98	14100	26000
0.37	5.5	520	2.0	264.5	**BK50Z-../DPE08LA4**	98	14100	26000
0.37	4.5	630	1.6	328.2	**BK50Z-../DPE08LA4**	98	14100	26000
0.37	3.5	800	1.05	414.8	**BK50Z-../DPE08LA4**	98	14100	26000
0.37	3.2	820	1.4	465.1	**BK50G10-../DPE08LA4**	102	14100	111000
0.37	2.9	900	1.3	513.4	**BK50G10-../DPE08LA4**	102	14100	111000
0.37	2.6	1010	1.15	568.6	**BK50G10-../DPE08LA4**	102	14100	111000
0.37	2.3	1140	1.0	651.7	**BK50G10-../DPE08LA4**	102	14100	111000
0.37	2.1	1250	0.92	722.2	**BK50G10-../DPE08LA4**	102	14100	111000
0.37	4.6	760	3.0	317.7	**BK60Z-../DPE08LA4**	120	16600	34000
0.37	4.1	860	2.7	355.5	**BK60Z-../DPE08LA4**	120	16600	34000
0.37	3.6	980	2.3	411.5	**BK60Z-../DPE08LA4**	120	16600	34000
0.37	3.2	1100	2.1	460.4	**BK60Z-../DPE08LA4**	120	16600	34000
0.37	3.0	1170	1.95	498.0	**BK60Z-../DPE08LA4**	120	16600	34000
0.37	2.6	1350	1.7	557.2	**BK60Z-../DPE08LA4**	120	16600	34000
0.37	2.4	1210	2.1	621.5	**BK60G20-../DPE08LA4**	128	16600	34000
0.37	2.0	1450	1.7	752.1	**BK60G20-../DPE08LA4**	128	16600	34000
0.37	1.7	1740	1.45	887.8	**BK60G20-../DPE08LA4**	128	16600	34000
0.37	1.5	2050	1.2	1016	**BK60G20-../DPE08LA4**	128	16600	34000
0.37	1.1	2850	0.88	1322	**BK60G20-../DPE08LA4**	128	16600	34000
0.37	2.0	1760	3.0	733.6	**BK70Z-../DPE08LA4**	208	24100	50000
0.37	1.5	1950	2.9	964.6	**BK70G20-../DPE08LA4**	206	24100	50000
0.37	1.3	2250	2.5	1139	**BK70G20-../DPE08LA4**	206	24100	50000
0.37	1.2	2550	2.2	1280	**BK70G20-../DPE08LA4**	206	24100	50000
0.37	1.0	3100	1.85	1457	**BK70G20-../DPE08LA4**	206	24100	50000
0.37	0.9	3450	1.65	1696	**BK70G20-../DPE08LA4**	206	24100	50000
0.37	0.75	4150	1.35	2040	**BK70G20-../DPE08LA4**	206	24100	50000

The torques marked (*) are maximum permissible torques for service factor f_B=1,0.

0.37 kW

P_N	50 Hz			i	Type	m		
	n_2	M_2	f_B					
[kW]	[1/min]	[Nm]	[—]	[:1]		[kg]	[N]	[N]
0.37	0.6	5200	1.1	2578	**BK70G20-../DPE08LA4**	206	24100	50000
0.37	0.7	3600	3.2	2205	**BK80G40-../DPE08LA4**	348	30000	75000
0.37	0.6	4400	2.6	2449	**BK80G40-../DPE08LA4**	348	30000	75000
0.37	0.55	4950	2.3	2811	**BK80G40-../DPE08LA4**	348	30000	75000
0.37	0.47	6000	1.9	3120	**BK80G40-../DPE08LA4**	348	30000	75000
0.37	0.39	7600	1.5	3776	**BK80G40-../DPE08LA4**	348	30000	75000
0.37	0.33	9200	1.25	4461	**BK80G40-../DPE08LA4**	348	30000	75000
0.37	0.29	10700	1.05	5032	**BK80G40-../DPE08LA4**	348	30000	75000
0.37	0.4	6700	2.8	3672	**BK90G50-../DPE08LA4**	621	49400	120000
0.37	0.36	7700	2.4	4070	**BK90G50-../DPE08LA4**	621	49400	120000
0.37	0.3	9600	1.95	4952	**BK90G50-../DPE08LA4**	621	49400	120000
0.37	0.27	10900	1.7	5491	**BK90G50-../DPE08LA4**	621	49400	120000
0.37	0.23	13200	1.4	6335	**BK90G50-../DPE08LA4**	621	49400	120000
0.37	0.21	14700	1.25	7022	**BK90G50-../DPE08LA4**	621	49400	120000
0.37	0.19	16400	1.15	7862	**BK90G50-../DPE08LA4**	621	49400	120000

0.55 kW

P_N	50 Hz			i	Type	m		
	n_2	M_2	f_B					
[kW]	[1/min]	[Nm]	[—]	[:1]		[kg]	[N]	[N]
0.55	198	24	3.0	7.25	**BK06-../DPE08XA4**	18	800	-
0.55	148	32.5	2.5	9.71	**BK06-../DPE08XA4**	18	880	-
0.55	123	39	2.1	11.67	**BK06-../DPE08XA4**	18	930	-
0.55	94	50	1.6	15.29	**BK06-../DPE08XA4**	18	1020	-
0.55	80	59	1.35	18.00	**BK06-../DPE08XA4**	18	1080	-
0.55	67	70	1.15	21.54	**BK06-../DPE08XA4**	18	1150	-
0.55	55	85	0.94	26.36	**BK06-../DPE08XA4**	18	1230	-
0.55	120	40	2.9	11.93	**BK10-../DPE08XA4**	30	3100	-
0.55	85	55	2.5	16.92	**BK10-../DPE08XA4**	30	3700	-
0.55	78	60	3.3	18.52	**BK10-../DPE08XA4**	30	4300	-
0.55	64	73	2.7	22.65	**BK10-../DPE08XA4**	30	4650	-
0.55	50	94	2.1	28.76	**BK10-../DPE08XA4**	30	5200	-
0.55	42	112	1.8	34.25	**BK10-../DPE08XA4**	30	5600	-
0.55	35.5	133	1.5	40.79	**BK10-../DPE08XA4**	30	6000	-
0.55	29.5	158	1.25	48.96	**BK10-../DPE08XA4**	30	6400	-
0.55	23.5	198	1.0	61.68	**BK10-../DPE08XA4**	30	7000	-
0.55	20	230	0.87	72.31	**BK10-../DPE08XA4**	30	7000	-
0.55	39	121	2.7	36.69	**BK20-../DPE08XA4**	39	5400	9000
0.55	33.5	141	2.3	42.70	**BK20-../DPE08XA4**	39	5800	9000
0.55	28	166	2.0	51.22	**BK20-../DPE08XA4**	39	6300	9000
0.55	23.5	198	1.65	61.30	**BK20-../DPE08XA4**	39	6500	9000
0.55	19	240	1.4	76.79	**BK20-../DPE08XA4**	39	7500	9000
0.55	16.5	275	1.2	88.12	**BK20-../DPE08XA4**	39	8000	9000
0.55	13.5	330	0.95	108.6	**BK20-../DPE08XA4**	39	8700	9000
0.55	12	370	0.89	124.2	**BK20Z-../DPE08XA4**	41	8700	9000
0.55	33.5	139	3.2	42.89	**BK30-../DPE08XA4**	45	7800	12000
0.55	28.5	162	2.8	50.27	**BK30-../DPE08XA4**	45	8300	12000
0.55	24.5	188	2.4	59.27	**BK30-../DPE08XA4**	45	8900	12000
0.55	20	225	2.0	71.56	**BK30-../DPE08XA4**	45	9700	12000
0.55	16.5	270	1.65	88.38	**BK30-../DPE08XA4**	45	10600	12000
0.55	14	315	1.45	102.4	**BK30-../DPE08XA4**	45	11200	12000
0.55	12	370	1.2	123.9	**BK30Z-../DPE08XA4**	48	11200	12000
0.55	9.9	445	1.0	145.1	**BK30Z-../DPE08XA4**	48	11200	12000
0.55	7.8	550	0.82	184.8	**BK30Z-../DPE08XA4**	48	11200	12000
0.55	17	265	2.9	84.36	**BK40-../DPE08XA4**	65	10700	17000
0.55	14	315	2.5	104.0	**BK40-../DPE08XA4**	65	11700	17000
0.55	12.5	355	2.2	118.2	**BK40Z-../DPE08XA4**	70	11700	17000
0.55	10	440	1.75	143.0	**BK40Z-../DPE08XA4**	70	11700	17000
0.55	8.5	510	1.55	169.0	**BK40Z-../DPE08XA4**	70	11700	17000

The torques marked (*) are maximum permissible torques for service factor f_B=1,0.

0.55 kW

P_N	50 Hz			i	Type	m		
	n_2	M_2	f_B					
[kW]	[1/min]	[Nm]	[—]	[:1]		[kg]	[N]	[N]
0.55	6.8	630	1.25	211.5	**BK40Z-../DPE08XA4**	70	11700	17000
0.55	5.8	730	1.05	246.6	**BK40Z-../DPE08XA4**	70	11700	17000
0.55	5.0	850	0.81	289.8	**BK40Z-../DPE08XA4**	70	11700	17000
0.55	12.5	355	3.0	115.4	**BK50Z-../DPE08XA4**	98	14100	26000
0.55	9.4	460	2.3	153.3	**BK50Z-../DPE08XA4**	98	14100	26000
0.55	7.0	610	1.7	206.8	**BK50Z-../DPE08XA4**	98	14100	26000
0.55	5.5	770	1.35	264.5	**BK50Z-../DPE08XA4**	98	14100	26000
0.55	4.4	960	1.05	328.2	**BK50Z-../DPE08XA4**	98	14100	26000
0.55	3.1	1290	0.89	465.1	**BK50G10-../DPE08XA4**	103	14100	111000
0.55	2.8	1420	0.81	513.4	**BK50G10-../DPE08XA4**	103	14100	111000
0.55	7.0	750	3.1	205.0	**BK60Z-../DPE08XA4**	121	16600	34000
0.55	6.0	870	2.6	239.7	**BK60Z-../DPE08XA4**	121	16600	34000
0.55	5.4	970	2.4	268.2	**BK60Z-../DPE08XA4**	121	16600	34000
0.55	4.6	1140	2.0	317.7	**BK60Z-../DPE08XA4**	121	16600	34000
0.55	4.1	1280	1.8	355.5	**BK60Z-../DPE08XA4**	121	16600	34000
0.55	3.5	1500	1.55	411.5	**BK60Z-../DPE08XA4**	121	16600	34000
0.55	3.2	1640	1.4	460.4	**BK60Z-../DPE08XA4**	121	16600	34000
0.55	2.9	1810	1.25	498.0	**BK60Z-../DPE08XA4**	121	16600	34000
0.55	2.6	2000	1.15	557.2	**BK60Z-../DPE08XA4**	121	16600	34000
0.55	2.4	1920	1.3	621.5	**BK60G20-../DPE08XA4**	129	16600	34000
0.55	2.0	2300	1.1	752.1	**BK60G20-../DPE08XA4**	129	16600	34000
0.55	1.7	2750	0.91	887.8	**BK60G20-../DPE08XA4**	129	16600	34000
0.55	2.9	1810	2.9	501.8	**BK70Z-../DPE08XA4**	210	24100	50000
0.55	2.6	2000	2.6	570.8	**BK70Z-../DPE08XA4**	210	24100	50000
0.55	2.3	2250	2.3	644.9	**BK70Z-../DPE08XA4**	210	24100	50000
0.55	2.0	2600	2.0	733.6	**BK70Z-../DPE08XA4**	210	24100	50000
0.55	1.7	2700	2.1	847.7	**BK70G20-../DPE08XA4**	207	24100	50000
0.55	1.5	3050	1.85	964.6	**BK70G20-../DPE08XA4**	207	24100	50000
0.55	1.3	3600	1.6	1139	**BK70G20-../DPE08XA4**	207	24100	50000
0.55	1.2	4000	1.45	1280	**BK70G20-../DPE08XA4**	207	24100	50000
0.55	1.0	4800	1.2	1457	**BK70G20-../DPE08XA4**	207	24100	50000
0.55	1.1	3550	3.2	1425	**BK80G40-../DPE08XA4**	349	30000	75000
0.55	0.95	4300	2.7	1583	**BK80G40-../DPE08XA4**	349	30000	75000
0.55	0.85	4850	2.4	1775	**BK80G40-../DPE08XA4**	349	30000	75000
0.55	0.65	6600	1.75	2205	**BK80G40-../DPE08XA4**	349	30000	75000
0.55	0.6	7300	1.6	2449	**BK80G40-../DPE08XA4**	349	30000	75000
0.55	0.55	8000	1.45	2811	**BK80G40-../DPE08XA4**	349	30000	75000
0.55	0.46	9900	1.15	3120	**BK80G40-../DPE08XA4**	349	30000	75000
0.55	0.55	7400	2.5	2764	**BK90G50-../DPE08XA4**	622	49400	120000
0.55	0.47	9000	2.1	3065	**BK90G50-../DPE08XA4**	622	49400	120000
0.55	0.39	11300	1.65	3672	**BK90G50-../DPE08XA4**	622	49400	120000
0.55	0.36	12400	1.5	4070	**BK90G50-../DPE08XA4**	622	49400	120000
0.55	0.29	16000	1.15	4952	**BK90G50-../DPE08XA4**	622	49400	120000
0.55	0.27	17300	1.05	5491	**BK90G50-../DPE08XA4**	622	49400	120000

0.75 kW

P_N	50 Hz			i	Type	m		
	n_2	M_2	f_B					
[kW]	[1/min]	[Nm]	[—]	[:1]		[kg]	[N]	[N]
0.75	197	33	2.2	7.25	**BK06-../DPE08XB4**	18	800	-
0.75	147	44.5	1.8	9.71	**BK06-../DPE08XB4**	18	880	-
0.75	123	53	1.5	11.67	**BK06-../DPE08XB4**	18	930	-
0.75	94	69	1.15	15.29	**BK06-../DPE08XB4**	18	1020	-
0.75	80	80	1.0	18.00	**BK06-../DPE08XB4**	18	1080	-
0.75	67	96	0.83	21.54	**BK06-../DPE08XB4**	18	1150	-
0.75	186	35	3.3	7.68	**BK10-../DPE08XB4**	30	2400	-
0.75	152	43	2.7	9.40	**BK10-../DPE08XB4**	30	2700	-
0.75	120	54	2.1	11.93	**BK10-../DPE08XB4**	30	3100	-
0.75	99	65	3.1	14.50	**BK10-../DPE08XB4**	30	3900	-

The torques marked (*) are maximum permissible torques for service factor f_B=1,0.

0.75 kW

P_N	50 Hz			i	Type	m		
	n_2	M_2	f_B					
[kW]	[1/min]	[Nm]	[—]	[:1]		[kg]	[N]	[N]
0.75	85	75	1.8	16.92	**BK10-../DPE08XB4**	30	3700	-
0.75	77	83	2.4	18.52	**BK10-../DPE08XB4**	30	4300	-
0.75	63	102	1.95	22.65	**BK10-../DPE08XB4**	30	4650	-
0.75	50	128	1.55	28.76	**BK10-../DPE08XB4**	30	5200	-
0.75	42	153	1.3	34.25	**BK10-../DPE08XB4**	30	5600	-
0.75	35	184	1.1	40.79	**BK10-../DPE08XB4**	30	6000	-
0.75	29.5	215	0.93	48.96	**BK10-../DPE08XB4**	30	6400	-
0.75	82	79	2.9	17.42	**BK20-../DPE08XB4**	39	3250	9000
0.75	59	109	3.0	24.29	**BK20-../DPE08XB4**	39	4500	9000
0.75	50	128	2.6	28.66	**BK20-../DPE08XB4**	39	4850	9000
0.75	39	165	2.0	36.69	**BK20-../DPE08XB4**	39	5400	9000
0.75	33.5	192	1.7	42.70	**BK20-../DPE08XB4**	39	5800	9000
0.75	28	225	1.45	51.22	**BK20-../DPE08XB4**	39	6300	9000
0.75	23.5	270	1.2	61.30	**BK20-../DPE08XB4**	39	6500	9000
0.75	19	330	1.0	76.79	**BK20-../DPE08XB4**	39	7500	9000
0.75	16.5	375	0.88	88.12	**BK20-../DPE08XB4**	39	8000	9000
0.75	42.5	151	3.0	33.70	**BK30-../DPE08XB4**	45	7000	12000
0.75	33.5	190	2.4	42.89	**BK30-../DPE08XB4**	45	7800	12000
0.75	28.5	220	2.0	50.27	**BK30-../DPE08XB4**	45	8300	12000
0.75	24.5	255	1.75	59.27	**BK30-../DPE08XB4**	45	8900	12000
0.75	20	310	1.45	71.56	**BK30-../DPE08XB4**	45	9700	12000
0.75	16.5	370	1.2	88.38	**BK30-../DPE08XB4**	45	10600	12000
0.75	14	430	1.05	102.4	**BK30-../DPE08XB4**	45	11200	12000
0.75	12	500	0.9	123.9	**BK30Z-../DPE08XB4**	48	11200	12000
0.75	24	260	3.0	59.66	**BK40-../DPE08XB4**	66	9100	17000
0.75	20.5	300	2.6	70.11	**BK40-../DPE08XB4**	66	9800	17000
0.75	17	365	2.1	84.36	**BK40-../DPE08XB4**	66	10700	17000
0.75	14	430	1.8	104.0	**BK40-../DPE08XB4**	66	11700	17000
0.75	12.5	485	1.6	118.2	**BK40Z-../DPE08XB4**	70	11700	17000
0.75	10	600	1.3	143.0	**BK40Z-../DPE08XB4**	70	11700	17000
0.75	8.5	690	1.15	169.0	**BK40Z-../DPE08XB4**	70	11700	17000
0.75	6.8	860	0.91	211.5	**BK40Z-../DPE08XB4**	70	11700	17000
0.75	19	325	3.2	75.40	**BK50-../DPE08XB4**	94	12600	26000
0.75	15	410	2.6	95.29	**BK50-../DPE08XB4**	94	14100	26000
0.75	12.5	485	2.2	115.4	**BK50Z-../DPE08XB4**	99	14100	26000
0.75	9.3	630	1.65	153.3	**BK50Z-../DPE08XB4**	99	14100	26000
0.75	6.9	850	1.25	206.8	**BK50Z-../DPE08XB4**	99	14100	26000
0.75	5.4	1070	0.98	264.5	**BK50Z-../DPE08XB4**	99	14100	26000
0.75	9.3	770	3.0	153.7	**BK60Z-../DPE08XB4**	122	16600	34000
0.75	7.8	910	2.5	183.2	**BK60Z-../DPE08XB4**	122	16600	34000
0.75	7.0	1020	2.3	205.0	**BK60Z-../DPE08XB4**	122	16600	34000
0.75	6.0	1190	1.95	239.7	**BK60Z-../DPE08XB4**	122	16600	34000
0.75	5.4	1320	1.75	268.2	**BK60Z-../DPE08XB4**	122	16600	34000
0.75	4.5	1590	1.45	317.7	**BK60Z-../DPE08XB4**	122	16600	34000
0.75	4.1	1740	1.3	355.5	**BK60Z-../DPE08XB4**	122	16600	34000
0.75	3.5	2000	1.15	411.5	**BK60Z-../DPE08XB4**	122	16600	34000
0.75	3.1	2300	1.0	460.4	**BK60Z-../DPE08XB4**	122	16600	34000
0.75	2.9	2450	0.94	498.0	**BK60Z-../DPE08XB4**	122	16600	34000
0.75	2.6	2750	0.84	557.2	**BK60Z-../DPE08XB4**	122	16600	34000
0.75	2.3	2850	0.88	621.5	**BK60G20-../DPE08XB4**	129	16600	34000
0.75	4.3	1660	3.1	333.6	**BK70Z-../DPE08XB4**	210	24100	50000
0.75	3.8	1880	2.8	379.9	**BK70Z-../DPE08XB4**	210	24100	50000
0.75	3.3	2150	2.4	432.1	**BK70Z-../DPE08XB4**	210	24100	50000
0.75	2.9	2450	2.1	501.8	**BK70Z-../DPE08XB4**	210	24100	50000
0.75	2.5	2850	1.8	570.8	**BK70Z-../DPE08XB4**	210	24100	50000
0.75	2.3	3100	1.7	644.9	**BK70Z-../DPE08XB4**	210	24100	50000
0.75	2.0	3550	1.45	733.6	**BK70Z-../DPE08XB4**	210	24100	50000
0.75	1.7	3850	1.5	847.7	**BK70G20-../DPE08XB4**	208	24100	50000
0.75	1.5	4350	1.3	964.6	**BK70G20-../DPE08XB4**	208	24100	50000
0.75	1.3	5000	1.15	1139	**BK70G20-../DPE08XB4**	208	24100	50000
0.75	1.2	5500	1.05	1280	**BK70G20-../DPE08XB4**	208	24100	50000
0.75	1.0	6700	0.85	1457	**BK70G20-../DPE08XB4**	208	24100	50000
0.75	1.5	3850	3.0	963.0	**BK80G40-../DPE08XB4**	350	30000	75000

The torques marked (*) are maximum permissible torques for service factor f_B=1,0.

0.75 kW

P_N	50 Hz			i	Type	m		
	n_2	M_2	f_B					
[kW]	[1/min]	[Nm]	[—]	[:1]		[kg]	[N]	[N]
0.75	1.4	4100	2.8	1079	**BK80G40-../DPE08XB4**	350	30000	75000
0.75	1.1	5400	2.1	1307	**BK80G40-../DPE08XB4**	350	30000	75000
0.75	1.0	5900	1.95	1425	**BK80G40-../DPE08XB4**	350	30000	75000
0.75	0.95	6300	1.85	1583	**BK80G40-../DPE08XB4**	350	30000	75000
0.75	0.85	7100	1.6	1775	**BK80G40-../DPE08XB4**	350	30000	75000
0.75	0.65	9600	1.2	2205	**BK80G40-../DPE08XB4**	350	30000	75000
0.75	0.6	10400	1.1	2449	**BK80G40-../DPE08XB4**	350	30000	75000
0.75	0.95	6000	3.1	1579	**BK90G50-../DPE08XB4**	622	49400	120000
0.75	0.8	7200	2.6	1803	**BK90G50-../DPE08XB4**	622	49400	120000
0.75	0.75	7600	2.4	2016	**BK90G50-../DPE08XB4**	622	49400	120000
0.75	0.55	10900	1.7	2764	**BK90G50-../DPE08XB4**	622	49400	120000
0.75	0.47	13100	1.4	3065	**BK90G50-../DPE08XB4**	622	49400	120000
0.75	0.39	16200	1.15	3672	**BK90G50-../DPE08XB4**	622	49400	120000
0.75	0.36	17700	1.05	4070	**BK90G50-../DPE08XB4**	622	49400	120000

1.1 kW

P_N	50 Hz			i	Type	m		
	n_2	M_2	f_B					
[kW]	[1/min]	[Nm]	[—]	[:1]		[kg]	[N]	[N]
1.1	325	29.5	3.2	4.44	**BK10-../DPE09XA4**	40	1900	-
1.1	240	40	2.6	6.02	**BK10-../DPE09XA4**	40	2100	-
1.1	188	51	2.3	7.68	**BK10-../DPE09XA4**	40	2400	-
1.1	154	62	1.85	9.40	**BK10-../DPE09XA4**	40	2700	-
1.1	135	70	2.6	10.70	**BK10-../DPE09XA4**	40	3500	-
1.1	121	79	1.45	11.93	**BK10-../DPE09XA4**	40	3100	-
1.1	100	94	2.1	14.50	**BK10-../DPE09XA4**	40	3900	-
1.1	86	109	1.25	16.92	**BK10-../DPE09XA4**	40	3700	-
1.1	78	121	1.65	18.52	**BK10-../DPE09XA4**	40	4300	-
1.1	64	147	1.35	22.65	**BK10-../DPE09XA4**	40	4650	-
1.1	51	185	1.1	28.76	**BK10-../DPE09XA4**	40	5200	-
1.1	42.5	220	0.91	34.25	**BK10-../DPE09XA4**	40	5600	-
1.1	124	77	3.0	11.69	**BK20-../DPE09XA4**	50	2400	8800
1.1	83	115	2.0	17.42	**BK20-../DPE09XA4**	50	3250	9000
1.1	75	126	2.6	19.39	**BK20-../DPE09XA4**	50	4050	9000
1.1	60	157	2.1	24.29	**BK20-../DPE09XA4**	50	4500	9000
1.1	51	185	1.8	28.66	**BK20-../DPE09XA4**	50	4850	9000
1.1	39.5	235	1.4	36.69	**BK20-../DPE09XA4**	50	5400	9000
1.1	34	275	1.2	42.70	**BK20-../DPE09XA4**	50	5800	9000
1.1	28.5	325	1.0	51.22	**BK20-../DPE09XA4**	50	6300	9000
1.1	23.5	395	0.84	61.30	**BK20-../DPE09XA4**	50	6500	9000
1.1	70	136	2.4	20.85	**BK30-../DPE09XA4**	56	5000	12000
1.1	63	150	3.0	23.20	**BK30-../DPE09XA4**	56	5900	12000
1.1	51	185	2.4	28.76	**BK30-../DPE09XA4**	56	6500	12000
1.1	43	215	2.1	33.70	**BK30-../DPE09XA4**	56	7000	12000
1.1	34	270	1.65	42.89	**BK30-../DPE09XA4**	56	7800	12000
1.1	29	315	1.45	50.27	**BK30-../DPE09XA4**	56	8300	12000
1.1	24.5	375	1.2	59.27	**BK30-../DPE09XA4**	56	8900	12000
1.1	20.5	445	1.0	71.56	**BK30-../DPE09XA4**	56	9700	12000
1.1	16.5	540	0.83	88.38	**BK30-../DPE09XA4**	56	10600	12000
1.1	35.5	265	2.9	40.88	**BK40-../DPE09XA4**	76	7600	17000
1.1	28.5	320	2.4	51.18	**BK40-../DPE09XA4**	76	8400	17000
1.1	24.5	375	2.1	59.66	**BK40-../DPE09XA4**	76	9100	17000
1.1	21	435	1.8	70.11	**BK40-../DPE09XA4**	76	9800	17000
1.1	17.5	520	1.5	84.36	**BK40-../DPE09XA4**	76	10700	17000
1.1	14	630	1.25	104.0	**BK40-../DPE09XA4**	76	11700	17000
1.1	12.5	710	1.1	118.2	**BK40Z-../DPE09XA4**	80	11700	17000
1.1	10.5	840	0.93	143.0	**BK40Z-../DPE09XA4**	80	11700	17000
1.1	24	385	2.7	60.76	**BK50-../DPE09XA4**	104	11400	26000
1.1	19.5	465	2.3	75.40	**BK50-../DPE09XA4**	104	12600	26000
1.1	15.5	580	1.8	95.29	**BK50-../DPE09XA4**	104	14100	26000

The torques marked (*) are maximum permissible torques for service factor f_B=1,0.

1.1 kW

P_N	50 Hz			i	Type	m		
	n_2	M_2	f_B					
[kW]	[1/min]	[Nm]	[—]	[:1]		[kg]	[N]	[N]
1.1	12.5	710	1.5	115.4	**BK50Z-../DPE09XA4**	109	14100	26000
1.1	9.4	920	1.15	153.3	**BK50Z-../DPE09XA4**	109	14100	26000
1.1	7.0	1230	0.85	206.8	**BK50Z-../DPE09XA4**	109	14100	26000
1.1	14.5	720	3.2	101.2	**BK60-../DPE09XA4**	113	13900	34000
1.1	13	800	2.9	113.2	**BK60-../DPE09XA4**	113	15000	34000
1.1	12	870	2.6	122.5	**BK60-../DPE09XA4**	113	15500	34000
1.1	11	950	2.4	137.0	**BK60-../DPE09XA4**	113	16600	34000
1.1	9.4	1110	2.1	153.7	**BK60Z-../DPE09XA4**	132	16600	34000
1.1	7.9	1320	1.75	183.2	**BK60Z-../DPE09XA4**	132	16600	34000
1.1	7.1	1470	1.55	205.0	**BK60Z-../DPE09XA4**	132	16600	34000
1.1	6.1	1720	1.35	239.7	**BK60Z-../DPE09XA4**	132	16600	34000
1.1	5.4	1940	1.2	268.2	**BK60Z-../DPE09XA4**	132	16600	34000
1.1	4.6	2250	1.0	317.7	**BK60Z-../DPE09XA4**	132	16600	34000
1.1	4.1	2550	0.9	355.5	**BK60Z-../DPE09XA4**	132	16600	34000
1.1	6.4	1640	3.2	226.2	**BK70Z-../DPE09XA4**	220	24100	50000
1.1	5.6	1870	2.8	257.3	**BK70Z-../DPE09XA4**	220	24100	50000
1.1	5.0	2100	2.5	293.3	**BK70Z-../DPE09XA4**	220	24100	50000
1.1	4.4	2350	2.2	333.6	**BK70Z-../DPE09XA4**	220	24100	50000
1.1	3.8	2750	1.9	379.9	**BK70Z-../DPE09XA4**	220	24100	50000
1.1	3.4	3050	1.7	432.1	**BK70Z-../DPE09XA4**	220	24100	50000
1.1	2.9	3600	1.45	501.8	**BK70Z-../DPE09XA4**	220	24100	50000
1.1	2.6	4000	1.3	570.8	**BK70Z-../DPE09XA4**	220	24100	50000
1.1	2.3	4550	1.15	644.9	**BK70Z-../DPE09XA4**	220	24100	50000
1.1	2.0	5200	1.0	733.6	**BK70Z-../DPE09XA4**	220	24100	50000
1.1	1.7	5800	0.98	847.7	**BK70G20-../DPE09XA4**	218	24100	50000
1.1	1.5	6500	0.88	964.6	**BK70G20-../DPE09XA4**	218	24100	50000
1.1	2.9	3600	3.2	499.5	**BK80Z-../DPE09XA4**	349	30000	75000
1.1	2.6	4000	2.9	559.5	**BK80Z-../DPE09XA4**	349	30000	75000
1.1	2.4	3600	3.2	607.8	**BK80G40-../DPE09XA4**	360	30000	75000
1.1	2.2	3900	2.9	680.9	**BK80G40-../DPE09XA4**	360	30000	75000
1.1	2.0	4400	2.6	756.3	**BK80G40-../DPE09XA4**	360	30000	75000
1.1	1.7	5200	2.2	847.2	**BK80G40-../DPE09XA4**	360	30000	75000
1.1	1.5	6100	1.9	963.0	**BK80G40-../DPE09XA4**	360	30000	75000
1.1	1.4	6400	1.8	1079	**BK80G40-../DPE09XA4**	360	30000	75000
1.1	1.2	7700	1.5	1307	**BK80G40-../DPE09XA4**	360	30000	75000
1.1	1.1	8300	1.4	1425	**BK80G40-../DPE09XA4**	360	30000	75000
1.1	0.95	9800	1.15	1583	**BK80G40-../DPE09XA4**	360	30000	75000
1.1	0.85	11000	1.05	1775	**BK80G40-../DPE09XA4**	360	30000	75000
1.1	1.5	5600	3.3	1008	**BK90G50-../DPE09XA4**	633	49400	120000
1.1	1.3	6500	2.8	1127	**BK90G50-../DPE09XA4**	633	49400	120000
1.1	1.1	8300	2.2	1363	**BK90G50-../DPE09XA4**	633	49400	120000
1.1	0.95	9500	1.95	1579	**BK90G50-../DPE09XA4**	633	49400	120000
1.1	0.8	11400	1.6	1803	**BK90G50-../DPE09XA4**	633	49400	120000
1.1	0.75	12000	1.55	2016	**BK90G50-../DPE09XA4**	633	49400	120000
1.1	0.55	16900	1.1	2764	**BK90G50-../DPE09XA4**	633	49400	120000

1.5 kW

P_N	50 Hz			i	Type	m		
	n_2	M_2	f_B					
[kW]	[1/min]	[Nm]	[—]	[:1]		[kg]	[N]	[N]
1.5	325	40.5	2.3	4.44	**BK10-../DPE09XB4**	40	1900	-
1.5	240	54	1.95	6.02	**BK10-../DPE09XB4**	40	2100	-
1.5	187	70	1.65	7.68	**BK10-../DPE09XB4**	40	2400	-
1.5	153	86	1.35	9.40	**BK10-../DPE09XB4**	40	2700	-
1.5	135	95	1.9	10.70	**BK10-../DPE09XB4**	40	3500	-
1.5	121	108	1.05	11.93	**BK10-../DPE09XB4**	40	3100	-
1.5	99	130	1.55	14.50	**BK10-../DPE09XB4**	40	3900	-
1.5	85	151	0.9	16.92	**BK10-../DPE09XB4**	40	3700	-
1.5	78	165	1.2	18.52	**BK10-../DPE09XB4**	40	4300	-
1.5	64	200	1.0	22.65	**BK10-../DPE09XB4**	40	4650	-

The torques marked (*) are maximum permissible torques for service factor f_B=1,0.

1.5 kW

P_N	50 Hz			i	Type	m		
	n_2	M_2	f_B					
[kW]	[1/min]	[Nm]	[—]	[:1]		[kg]	[N]	[N]
1.5	182	72	3.2	7.91	**BK20-../DPE09XB4**	50	1330	7600
1.5	145	90	2.6	9.91	**BK20-../DPE09XB4**	50	1910	8300
1.5	129	99	3.0	11.14	**BK20-../DPE09XB4**	50	3300	8100
1.5	123	107	2.2	11.69	**BK20-../DPE09XB4**	50	2400	8800
1.5	98	131	2.5	14.75	**BK20-../DPE09XB4**	50	3650	9000
1.5	83	157	1.45	17.42	**BK20-../DPE09XB4**	50	3250	9000
1.5	75	171	1.95	19.39	**BK20-../DPE09XB4**	50	4050	9000
1.5	60	210	1.55	24.29	**BK20-../DPE09XB4**	50	4500	9000
1.5	51	250	1.3	28.66	**BK20-../DPE09XB4**	50	4850	9000
1.5	39.5	325	1.0	36.69	**BK20-../DPE09XB4**	50	5400	9000
1.5	34	375	0.88	42.70	**BK20-../DPE09XB4**	50	5800	9000
1.5	121	108	3.0	11.93	**BK30-../DPE09XB4**	56	3650	12000
1.5	103	126	2.5	13.98	**BK30-../DPE09XB4**	56	4050	12000
1.5	80	161	2.8	17.95	**BK30-../DPE09XB4**	56	5300	12000
1.5	69	188	1.7	20.85	**BK30-../DPE09XB4**	56	5000	12000
1.5	62	205	2.2	23.20	**BK30-../DPE09XB4**	56	5900	12000
1.5	50	255	1.75	28.76	**BK30-../DPE09XB4**	56	6500	12000
1.5	43	295	1.55	33.70	**BK30-../DPE09XB4**	56	7000	12000
1.5	33.5	380	1.2	42.89	**BK30-../DPE09XB4**	56	7800	12000
1.5	29	430	1.05	50.27	**BK30-../DPE09XB4**	56	8300	12000
1.5	24.5	510	0.88	59.27	**BK30-../DPE09XB4**	56	8900	12000
1.5	51	250	3.1	28.59	**BK40-../DPE09XB4**	76	6300	17000
1.5	41.5	310	2.5	34.61	**BK40-../DPE09XB4**	76	6900	17000
1.5	35.5	360	2.2	40.88	**BK40-../DPE09XB4**	76	7600	17000
1.5	28.5	440	1.75	51.18	**BK40-../DPE09XB4**	76	8400	17000
1.5	24.5	510	1.55	59.66	**BK40-../DPE09XB4**	76	9100	17000
1.5	20.5	600	1.3	70.11	**BK40-../DPE09XB4**	76	9800	17000
1.5	17.5	710	1.1	84.36	**BK40-../DPE09XB4**	76	10700	17000
1.5	14	860	0.91	104.0	**BK40-../DPE09XB4**	76	11700	17000
1.5	12.5	970	0.8	118.2	**BK40Z-../DPE09XB4**	80	11700	17000
1.5	30.5	415	2.5	47.50	**BK50-../DPE09XB4**	104	10100	25700
1.5	24	520	2.0	60.76	**BK50-../DPE09XB4**	104	11400	26000
1.5	19.5	630	1.65	75.40	**BK50-../DPE09XB4**	104	12600	26000
1.5	15.5	790	1.35	95.29	**BK50-../DPE09XB4**	104	14100	26000
1.5	12.5	970	1.1	115.4	**BK50Z-../DPE09XB4**	109	14100	26000
1.5	9.4	1260	0.83	153.3	**BK50Z-../DPE09XB4**	109	14100	26000
1.5	18.5	770	3.0	78.13	**BK60-../DPE09XB4**	113	11900	34000
1.5	16.5	860	2.7	87.41	**BK60-../DPE09XB4**	113	12900	34000
1.5	14.5	980	2.3	101.2	**BK60-../DPE09XB4**	113	13900	34000
1.5	13	1100	2.1	113.2	**BK60-../DPE09XB4**	113	15000	34000
1.5	12	1190	1.95	122.5	**BK60-../DPE09XB4**	113	15500	34000
1.5	10.5	1360	1.7	137.0	**BK60-../DPE09XB4**	113	16600	34000
1.5	9.4	1520	1.5	153.7	**BK60Z-../DPE09XB4**	132	16600	34000
1.5	7.9	1810	1.25	183.2	**BK60Z-../DPE09XB4**	132	16600	34000
1.5	7.0	2000	1.15	205.0	**BK60Z-../DPE09XB4**	132	16600	34000
1.5	6.0	2350	0.98	239.7	**BK60Z-../DPE09XB4**	132	16600	34000
1.5	5.4	2650	0.87	268.2	**BK60Z-../DPE09XB4**	132	16600	34000
1.5	8.2	1740	3.0	175.7	**BK70-../DPE09XB4**	199	24100	50000
1.5	7.6	1880	2.8	190.4	**BK70Z-../DPE09XB4**	220	24100	50000
1.5	6.4	2200	2.4	226.2	**BK70Z-../DPE09XB4**	220	24100	50000
1.5	5.6	2550	2.0	257.3	**BK70Z-../DPE09XB4**	220	24100	50000
1.5	4.9	2900	1.8	293.3	**BK70Z-../DPE09XB4**	220	24100	50000
1.5	4.4	3250	1.6	333.6	**BK70Z-../DPE09XB4**	220	24100	50000
1.5	3.8	3750	1.4	379.9	**BK70Z-../DPE09XB4**	220	24100	50000
1.5	3.4	4200	1.25	432.1	**BK70Z-../DPE09XB4**	220	24100	50000
1.5	2.9	4900	1.05	501.8	**BK70Z-../DPE09XB4**	220	24100	50000
1.5	2.6	5500	0.95	570.8	**BK70Z-../DPE09XB4**	220	24100	50000
1.5	2.3	6200	0.84	644.9	**BK70Z-../DPE09XB4**	220	24100	50000
1.5	3.7	3850	3.0	389.0	**BK80Z-../DPE09XB4**	349	30000	75000
1.5	3.3	4300	2.7	435.7	**BK80Z-../DPE09XB4**	349	30000	75000
1.5	2.9	4900	2.3	499.5	**BK80Z-../DPE09XB4**	349	30000	75000
1.5	2.6	5500	2.1	559.5	**BK80Z-../DPE09XB4**	349	30000	75000
1.5	2.4	5200	2.2	607.8	**BK80G40-../DPE09XB4**	360	30000	75000

The torques marked (*) are maximum permissible torques for service factor f_B=1,0.

1.5 kW

P_N	50 Hz			i	Type	m		
	n_2	M_2	f_B					
[kW]	[1/min]	[Nm]	[—]	[:1]		[kg]	[N]	[N]
1.5	2.2	5600	2.1	680.9	**BK80G40-../DPE09XB4**	360	30000	75000
1.5	1.9	6700	1.7	756.3	**BK80G40-../DPE09XB4**	360	30000	75000
1.5	1.7	7500	1.55	847.2	**BK80G40-../DPE09XB4**	360	30000	75000
1.5	1.5	8600	1.35	963.0	**BK80G40-../DPE09XB4**	360	30000	75000
1.5	1.4	9200	1.25	1079	**BK80G40-../DPE09XB4**	360	30000	75000
1.5	1.1	11800	0.97	1425	**BK80G40-../DPE09XB4**	360	30000	75000
1.5	2.3	6200	3.0	637.7	**BK90Z-../DPE09XB4**	622	49400	120000
1.5	2.1	6800	2.7	713.5	**BK90Z-../DPE09XB4**	622	49400	120000
1.5	1.8	6600	2.8	821.0	**BK90G50-../DPE09XB4**	633	49400	120000
1.5	1.7	7200	2.6	882.3	**BK90G50-../DPE09XB4**	633	49400	120000
1.5	1.5	8200	2.3	1008	**BK90G50-../DPE09XB4**	633	49400	120000
1.5	1.3	9500	1.95	1127	**BK90G50-../DPE09XB4**	633	49400	120000
1.5	1.1	11800	1.55	1363	**BK90G50-../DPE09XB4**	633	49400	120000
1.5	0.95	13500	1.35	1579	**BK90G50-../DPE09XB4**	633	49400	120000
1.5	0.8	16100	1.15	1803	**BK90G50-../DPE09XB4**	633	49400	120000
1.5	0.75	17100	1.1	2016	**BK90G50-../DPE09XB4**	633	49400	120000

2.2 kW

P_N	50 Hz			i	Type	m		
	n_2	M_2	f_B					
[kW]	[1/min]	[Nm]	[—]	[:1]		[kg]	[N]	[N]
2.2	330	58	1.65	4.44	**BK10-../DPE09XB4C**	40	1900	-
2.2	245	78	1.35	6.02	**BK10-../DPE09XB4C**	40	2100	-
2.2	189	102	1.15	7.68	**BK10-../DPE09XB4C**	40	2400	-
2.2	155	124	0.93	9.40	**BK10-../DPE09XB4C**	40	2700	-
2.2	136	139	1.3	10.70	**BK10-../DPE09XB4C**	40	3500	-
2.2	100	189	1.05	14.50	**BK10-../DPE09XB4C**	40	3900	-
2.2	79	235	0.85	18.52	**BK10-../DPE09XB4C**	40	4300	-
2.2	320	60	3.3	4.54	**BK20-../DPE09XB4C**	50	520	6100
2.2	245	78	2.8	6.02	**BK20-../DPE09XB4C**	50	580	6800
2.2	184	105	2.2	7.91	**BK20-../DPE09XB4C**	50	1330	7600
2.2	147	131	1.75	9.91	**BK20-../DPE09XB4C**	50	1910	8300
2.2	131	144	2.1	11.14	**BK20-../DPE09XB4C**	50	3300	8100
2.2	125	154	1.5	11.69	**BK20-../DPE09XB4C**	50	2400	8800
2.2	99	191	1.75	14.75	**BK20-../DPE09XB4C**	50	3650	9000
2.2	84	225	1.05	17.42	**BK20-../DPE09XB4C**	50	3250	9000
2.2	75	250	1.3	19.39	**BK20-../DPE09XB4C**	50	4050	9000
2.2	60	315	1.05	24.29	**BK20-../DPE09XB4C**	50	4500	9000
2.2	51	370	0.89	28.66	**BK20-../DPE09XB4C**	50	4850	9000
2.2	310	62	3.1	4.73	**BK30-../DPE09XB4C**	56	1550	8800
2.2	245	78	2.7	6.02	**BK30-../DPE09XB4C**	56	1690	9600
2.2	195	99	2.7	7.45	**BK30-../DPE09XB4C**	56	2200	10400
2.2	151	128	2.5	9.63	**BK30-../DPE09XB4C**	56	3150	11500
2.2	128	147	2.8	11.39	**BK30-../DPE09XB4C**	56	4150	11000
2.2	122	158	2.0	11.93	**BK30-../DPE09XB4C**	56	3650	12000
2.2	104	183	1.75	13.98	**BK30-../DPE09XB4C**	56	4050	12000
2.2	100	189	2.4	14.50	**BK30-../DPE09XB4C**	56	4900	12000
2.2	81	230	1.95	17.95	**BK30-../DPE09XB4C**	56	5300	12000
2.2	70	270	1.2	20.85	**BK30-../DPE09XB4C**	56	5000	12000
2.2	63	300	1.5	23.20	**BK30-../DPE09XB4C**	56	5900	12000
2.2	51	370	1.2	28.76	**BK30-../DPE09XB4C**	56	6500	12000
2.2	43.5	430	1.05	33.70	**BK30-../DPE09XB4C**	56	7000	12000
2.2	34	540	0.83	42.89	**BK30-../DPE09XB4C**	56	7800	12000
2.2	123	157	3.1	11.86	**BK40-../DPE09XB4C**	76	1770	12200
2.2	65	290	2.7	22.44	**BK40-../DPE09XB4C**	76	5500	16500
2.2	51	370	2.1	28.59	**BK40-../DPE09XB4C**	76	6300	17000
2.2	42	450	1.75	34.61	**BK40-../DPE09XB4C**	76	6900	17000
2.2	35.5	530	1.45	40.88	**BK40-../DPE09XB4C**	76	7600	17000
2.2	28.5	640	1.2	51.18	**BK40-../DPE09XB4C**	76	8400	17000
2.2	24.5	750	1.05	59.66	**BK40-../DPE09XB4C**	76	9100	17000
2.2	21	870	0.9	70.11	**BK40-../DPE09XB4C**	76	9800	17000

The torques marked (*) are maximum permissible torques for service factor f_B=1,0.

2.2 kW

P_N	50 Hz			i	Type	m		
	n_2	M_2	f_B					
[kW]	[1/min]	[Nm]	[—]	[:1]		[kg]	[N]	[N]
2.2	81	235	3.1	17.92	**BK50-../DPE09XB4C**	104	4600	16800
2.2	55	340	3.1	26.51	**BK50-../DPE09XB4C**	104	7800	21200
2.2	41.5	455	2.3	35.21	**BK50-../DPE09XB4C**	104	8700	23100
2.2	31	600	1.75	47.50	**BK50-../DPE09XB4C**	104	10100	25700
2.2	24	770	1.35	60.76	**BK50-../DPE09XB4C**	104	11400	26000
2.2	19.5	930	1.15	75.40	**BK50-../DPE09XB4C**	104	12600	26000
2.2	15.5	1160	0.91	95.29	**BK50-../DPE09XB4C**	104	14100	26000
2.2	29	720	3.2	50.40	**BK60-../DPE09XB4C**	113	9100	29800
2.2	25	840	2.7	58.95	**BK60-../DPE09XB4C**	113	9900	31500
2.2	22	950	2.4	65.95	**BK60-../DPE09XB4C**	113	10900	33000
2.2	19	1100	2.1	78.13	**BK60-../DPE09XB4C**	113	11900	34000
2.2	17	1230	1.85	87.41	**BK60-../DPE09XB4C**	113	12900	34000
2.2	14.5	1440	1.6	101.2	**BK60-../DPE09XB4C**	113	13900	34000
2.2	13	1610	1.45	113.2	**BK60-../DPE09XB4C**	113	15000	34000
2.2	12	1750	1.3	122.5	**BK60-../DPE09XB4C**	113	15500	34000
2.2	11	1910	1.2	137.0	**BK60-../DPE09XB4C**	113	16600	34000
2.2	9.5	2200	1.05	153.7	**BK60Z-../DPE09XB4C**	132	16600	34000
2.2	8.0	2600	0.88	183.2	**BK60Z-../DPE09XB4C**	132	16600	34000
2.2	12.5	1680	3.1	120.2	**BK70-../DPE09XB4C**	199	18600	50000
2.2	11	1910	2.7	136.7	**BK70-../DPE09XB4C**	199	20700	50000
2.2	9.4	2200	2.4	154.4	**BK70-../DPE09XB4C**	199	21900	50000
2.2	8.3	2500	2.1	175.7	**BK70-../DPE09XB4C**	199	24100	50000
2.2	7.7	2700	1.95	190.4	**BK70Z-../DPE09XB4C**	220	24100	50000
2.2	6.5	3200	1.65	226.2	**BK70Z-../DPE09XB4C**	220	24100	50000
2.2	5.7	3650	1.4	257.3	**BK70Z-../DPE09XB4C**	220	24100	50000
2.2	5.0	4200	1.25	293.3	**BK70Z-../DPE09XB4C**	220	24100	50000
2.2	4.4	4750	1.1	333.6	**BK70Z-../DPE09XB4C**	220	24100	50000
2.2	3.9	5300	0.98	379.9	**BK70Z-../DPE09XB4C**	220	24100	50000
2.2	3.4	6100	0.85	432.1	**BK70Z-../DPE09XB4C**	220	24100	50000
2.2	5.8	3600	3.2	253.3	**BK80Z-../DPE09XB4C**	349	30000	75000
2.2	4.9	4250	2.7	300.6	**BK80Z-../DPE09XB4C**	349	30000	75000
2.2	4.4	4750	2.4	336.7	**BK80Z-../DPE09XB4C**	349	30000	75000
2.2	3.8	5500	2.1	389.0	**BK80Z-../DPE09XB4C**	349	30000	75000
2.2	3.4	6100	1.9	435.7	**BK80Z-../DPE09XB4C**	349	30000	75000
2.2	3.0	7000	1.65	499.5	**BK80Z-../DPE09XB4C**	349	30000	75000
2.2	2.6	8000	1.45	559.5	**BK80Z-../DPE09XB4C**	349	30000	75000
2.2	2.4	8000	1.45	607.8	**BK80G40-../DPE09XB4C**	360	30000	75000
2.2	2.2	8700	1.3	680.9	**BK80G40-../DPE09XB4C**	360	30000	75000
2.2	2.0	9600	1.2	756.3	**BK80G40-../DPE09XB4C**	360	30000	75000
2.2	1.8	10700	1.05	847.2	**BK80G40-../DPE09XB4C**	360	30000	75000
2.2	1.6	12200	0.94	963.0	**BK80G40-../DPE09XB4C**	360	30000	75000
2.2	1.4	13900	0.83	1079	**BK80G40-../DPE09XB4C**	360	30000	75000
2.2	3.4	6100	3.0	435.3	**BK90Z-../DPE09XB4C**	622	49400	120000
2.2	3.0	7000	2.6	499.2	**BK90Z-../DPE09XB4C**	622	49400	120000
2.2	2.6	8000	2.3	558.5	**BK90Z-../DPE09XB4C**	622	49400	120000
2.2	2.3	9100	2.0	637.7	**BK90Z-../DPE09XB4C**	622	49400	120000
2.2	2.1	10000	1.85	713.5	**BK90Z-../DPE09XB4C**	622	49400	120000
2.2	1.8	10300	1.8	821.0	**BK90G50-../DPE09XB4C**	633	49400	120000
2.2	1.7	11100	1.65	882.3	**BK90G50-../DPE09XB4C**	633	49400	120000
2.2	1.5	12600	1.45	1008	**BK90G50-../DPE09XB4C**	633	49400	120000
2.2	1.3	14600	1.25	1127	**BK90G50-../DPE09XB4C**	633	49400	120000
2.2	1.1	17800	1.05	1363	**BK90G50-../DPE09XB4C**	633	49400	120000

3 kW

P_N	50 Hz			i	Type	m		
	n_2	M_2	f_B					
[kW]	[1/min]	[Nm]	[—]	[:1]		[kg]	[N]	[N]
3	310	85	2.3	4.73	**BK30-../DPE11LA4**	76	1550	8800
3	245	107	2.0	6.02	**BK30-../DPE11LA4**	76	1690	9600
3	196	134	2.0	7.45	**BK30-../DPE11LA4**	76	2200	10400
3	152	173	1.85	9.63	**BK30-../DPE11LA4**	76	3150	11500

The torques marked (*) are maximum permissible torques for service factor f_B=1,0.

3 kW

P_N	50 Hz			i	Type	m		
	n_2	M_2	f_B					
[kW]	[1/min]	[Nm]	[—]	[:1]		[kg]	[N]	[N]
3	128	200	2.1	11.39	**BK30-../DPE11LA4**	76	4150	11000
3	122	215	1.5	11.93	**BK30-../DPE11LA4**	76	3650	12000
3	105	245	1.3	13.98	**BK30-../DPE11LA4**	76	4050	12000
3	101	255	1.75	14.50	**BK30-../DPE11LA4**	76	4900	12000
3	82	310	1.45	17.95	**BK30-../DPE11LA4**	76	5300	12000
3	63	405	1.1	23.20	**BK30-../DPE11LA4**	76	5900	12000
3	51	500	0.9	28.76	**BK30-../DPE11LA4**	76	6500	12000
3	157	167	3.0	9.31	**BK40-../DPE11LA4**	102	1040	11200
3	123	210	2.3	11.86	**BK40-../DPE11LA4**	102	1770	12200
3	101	255	3.1	14.50	**BK40-../DPE11LA4**	102	4500	14300
3	81	315	2.5	18.05	**BK40-../DPE11LA4**	102	4900	15300
3	65	395	1.95	22.44	**BK40-../DPE11LA4**	102	5500	16500
3	51	500	1.55	28.59	**BK40-../DPE11LA4**	102	6300	17000
3	42.5	600	1.3	34.61	**BK40-../DPE11LA4**	102	6900	17000
3	36	710	1.1	40.88	**BK40-../DPE11LA4**	102	7600	17000
3	82	315	2.3	17.92	**BK50-../DPE11LA4**	132	4600	16800
3	76	335	3.1	19.33	**BK50-../DPE11LA4**	132	6900	19200
3	55	465	2.3	26.51	**BK50-../DPE11LA4**	132	7800	21200
3	41.5	620	1.7	35.21	**BK50-../DPE11LA4**	132	8700	23100
3	31	820	1.3	47.50	**BK50-../DPE11LA4**	132	10100	25700
3	24	1050	1.0	60.76	**BK50-../DPE11LA4**	132	11400	26000
3	19.5	1270	0.83	75.40	**BK50-../DPE11LA4**	132	12600	26000
3	38.5	740	3.1	37.80	**BK60-../DPE11LA4**	142	7300	26500
3	32.5	880	2.6	45.05	**BK60-../DPE11LA4**	142	8200	28300
3	29	980	2.3	50.40	**BK60-../DPE11LA4**	142	9100	29800
3	25	1140	2.0	58.95	**BK60-../DPE11LA4**	142	9900	31500
3	22.5	1270	1.8	65.95	**BK60-../DPE11LA4**	142	10900	33000
3	19	1500	1.55	78.13	**BK60-../DPE11LA4**	142	11900	34000
3	17	1680	1.35	87.41	**BK60-../DPE11LA4**	142	12900	34000
3	14.5	1970	1.15	101.2	**BK60-../DPE11LA4**	142	13900	34000
3	13	2200	1.05	113.2	**BK60-../DPE11LA4**	142	15000	34000
3	12	2350	0.98	122.5	**BK60-../DPE11LA4**	142	15500	34000
3	11	2600	0.88	137.0	**BK60-../DPE11LA4**	142	16600	34000
3	16	1790	2.9	90.96	**BK70-../DPE11LA4**	221	15300	49900
3	14.5	1970	2.6	103.5	**BK70-../DPE11LA4**	221	17200	50000
3	12.5	2250	2.3	120.2	**BK70-../DPE11LA4**	221	18600	50000
3	11	2600	2.0	136.7	**BK70-../DPE11LA4**	221	20700	50000
3	9.5	3000	1.75	154.4	**BK70-../DPE11LA4**	221	21900	50000
3	8.3	3450	1.5	175.7	**BK70-../DPE11LA4**	221	24100	50000
3	7.7	3700	1.4	190.4	**BK70Z-../DPE11LA4**	247	24100	50000
3	6.5	4400	1.2	226.2	**BK70Z-../DPE11LA4**	247	24100	50000
3	5.7	5000	1.05	257.3	**BK70Z-../DPE11LA4**	247	24100	50000
3	5.0	5700	0.91	293.3	**BK70Z-../DPE11LA4**	247	24100	50000
3	4.4	6500	0.8	333.6	**BK70Z-../DPE11LA4**	247	24100	50000
3	8.5	3350	3.1	171.5	**BK80-../DPE11LA4**	336	30000	75000
3	8.2	3450	3.3	177.6	**BK80Z-../DPE11LA4**	378	30000	75000
3	7.4	3850	3.0	198.9	**BK80Z-../DPE11LA4**	378	30000	75000
3	6.5	4400	2.6	226.1	**BK80Z-../DPE11LA4**	378	30000	75000
3	5.8	4900	2.3	253.3	**BK80Z-../DPE11LA4**	378	30000	75000
3	4.9	5800	2.0	300.6	**BK80Z-../DPE11LA4**	378	30000	75000
3	4.4	6500	1.75	336.7	**BK80Z-../DPE11LA4**	378	30000	75000
3	3.8	7500	1.55	389.0	**BK80Z-../DPE11LA4**	378	30000	75000
3	3.4	8400	1.35	435.7	**BK80Z-../DPE11LA4**	378	30000	75000
3	3.0	9500	1.2	499.5	**BK80Z-../DPE11LA4**	378	30000	75000
3	2.7	10600	1.1	559.5	**BK80Z-../DPE11LA4**	378	30000	75000
3	2.4	11100	1.05	607.8	**BK80G40-../DPE11LA4**	386	30000	75000
3	2.2	12100	0.95	680.9	**BK80G40-../DPE11LA4**	386	30000	75000
3	2.0	13500	0.85	756.3	**BK80G40-../DPE11LA4**	386	30000	75000
3	5.0	5700	3.2	295.6	**BK90Z-../DPE11LA4**	643	49400	120000
3	4.4	6500	2.8	330.7	**BK90Z-../DPE11LA4**	643	49400	120000
3	3.8	7500	2.5	389.1	**BK90Z-../DPE11LA4**	643	49400	120000
3	3.4	8400	2.2	435.3	**BK90Z-../DPE11LA4**	643	49400	120000
3	3.0	9500	1.95	499.2	**BK90Z-../DPE11LA4**	643	49400	120000
3	2.7	10600	1.75	558.5	**BK90Z-../DPE11LA4**	643	49400	120000

The torques marked (*) are maximum permissible torques for service factor f_B=1,0.

3 kW

P_N	50 Hz			i	Type	m		
	n_2	M_2	f_B					
[kW]	[1/min]	[Nm]	[—]	[:1]		[kg]	[N]	[N]
3	2.3	12400	1.5	637.7	**BK90Z-../DPE11LA4**	643	49400	120000
3	2.1	13600	1.35	713.5	**BK90Z-../DPE11LA4**	643	49400	120000
3	1.8	14500	1.3	821.0	**BK90G50-../DPE11LA4**	660	49400	120000
3	1.7	15600	1.2	882.3	**BK90G50-../DPE11LA4**	660	49400	120000
3	1.5	17700	1.05	1008	**BK90G50-../DPE11LA4**	660	49400	120000
3	1.3	20500	0.9	1127	**BK90G50-../DPE11LA4**	660	49400	120000

4 kW

P_N	50 Hz			i	Type	m		
	n_2	M_2	f_B					
[kW]	[1/min]	[Nm]	[—]	[:1]		[kg]	[N]	[N]
4	310	113	1.7	4.73	**BK30-../DPE11LB4**	76	1550	8800
4	245	143	1.5	6.02	**BK30-../DPE11LB4**	76	1690	9600
4	195	180	1.5	7.45	**BK30-../DPE11LB4**	76	2200	10400
4	151	230	1.4	9.63	**BK30-../DPE11LB4**	76	3150	11500
4	128	265	1.55	11.39	**BK30-../DPE11LB4**	76	4150	11000
4	122	285	1.1	11.93	**BK30-../DPE11LB4**	76	3650	12000
4	104	330	0.97	13.98	**BK30-../DPE11LB4**	76	4050	12000
4	100	340	1.3	14.50	**BK30-../DPE11LB4**	76	4900	12000
4	81	420	1.05	17.95	**BK30-../DPE11LB4**	76	5300	12000
4	63	540	0.83	23.20	**BK30-../DPE11LB4**	76	5900	12000
4	245	143	3.3	6.02	**BK40-../DPE11LB4**	102	470	9800
4	194	181	2.7	7.49	**BK40-../DPE11LB4**	102	750	10500
4	156	225	2.2	9.31	**BK40-../DPE11LB4**	102	1040	11200
4	130	260	2.8	11.17	**BK40-../DPE11LB4**	102	4100	13100
4	123	285	1.75	11.86	**BK40-../DPE11LB4**	102	1770	12200
4	100	340	2.3	14.50	**BK40-../DPE11LB4**	102	4500	14300
4	81	420	1.85	18.05	**BK40-../DPE11LB4**	102	4900	15300
4	65	520	1.5	22.44	**BK40-../DPE11LB4**	102	5500	16500
4	51	670	1.15	28.59	**BK40-../DPE11LB4**	102	6300	17000
4	42	810	0.96	34.61	**BK40-../DPE11LB4**	102	6900	17000
4	35.5	960	0.81	40.88	**BK40-../DPE11LB4**	102	7600	17000
4	104	330	3.2	13.95	**BK50-../DPE11LB4**	132	6100	17400
4	96	355	3.0	15.19	**BK50-../DPE11LB4**	132	6300	18000
4	81	425	1.7	17.92	**BK50-../DPE11LB4**	132	4600	16800
4	76	450	2.3	19.33	**BK50-../DPE11LB4**	132	6900	19200
4	55	620	1.7	26.51	**BK50-../DPE11LB4**	132	7800	21200
4	41.5	820	1.3	35.21	**BK50-../DPE11LB4**	132	8700	23100
4	31	1090	0.96	47.50	**BK50-../DPE11LB4**	132	10100	25700
4	53	720	3.2	27.36	**BK60-../DPE11LB4**	142	5600	23200
4	43	880	2.6	33.78	**BK60-../DPE11LB4**	142	6500	25200
4	38.5	990	2.3	37.80	**BK60-../DPE11LB4**	142	7300	26500
4	32.5	1170	1.95	45.05	**BK60-../DPE11LB4**	142	8200	28300
4	29	1310	1.75	50.40	**BK60-../DPE11LB4**	142	9100	29800
4	25	1520	1.5	58.95	**BK60-../DPE11LB4**	142	9900	31500
4	22	1730	1.35	65.95	**BK60-../DPE11LB4**	142	10900	33000
4	19	2000	1.15	78.13	**BK60-../DPE11LB4**	142	11900	34000
4	17	2200	1.05	87.41	**BK60-../DPE11LB4**	142	12900	34000
4	14.5	2600	0.88	101.2	**BK60-../DPE11LB4**	142	13900	34000
4	24	1590	3.3	61.60	**BK70-../DPE11LB4**	221	11500	42800
4	21	1810	2.9	70.23	**BK70-../DPE11LB4**	221	12500	44800
4	18.5	2050	2.5	79.89	**BK70-../DPE11LB4**	221	14300	47600
4	16	2350	2.2	90.96	**BK70-../DPE11LB4**	221	15300	49900
4	14.5	2600	2.0	103.5	**BK70-../DPE11LB4**	221	17200	50000
4	12.5	3050	1.7	120.2	**BK70-../DPE11LB4**	221	18600	50000
4	11	3450	1.5	136.7	**BK70-../DPE11LB4**	221	20700	50000
4	9.4	4050	1.3	154.4	**BK70-../DPE11LB4**	221	21900	50000
4	8.3	4600	1.15	175.7	**BK70-../DPE11LB4**	221	24100	50000
4	7.7	4950	1.05	190.4	**BK70Z-../DPE11LB4**	247	24100	50000
4	6.5	5800	0.9	226.2	**BK70Z-../DPE11LB4**	247	24100	50000

The torques marked (*) are maximum permissible torques for service factor f_B=1,0.

4 kW

P_N	50 Hz			i	Type	m		
	n_2	M_2	f_B					
[kW]	[1/min]	[Nm]	[—]	[:1]		[kg]	[N]	[N]
4	11.5	3300	3.2	131.6	**BK80-../DPE11LB4**	336	24900	75000
4	9.5	4000	2.6	153.1	**BK80-../DPE11LB4**	336	27200	75000
4	8.5	4450	2.4	171.5	**BK80-../DPE11LB4**	336	30000	75000
4	8.2	4650	2.5	177.6	**BK80Z-../DPE11LB4**	378	30000	75000
4	7.3	5200	2.2	198.9	**BK80Z-../DPE11LB4**	378	30000	75000
4	6.5	5800	2.0	226.1	**BK80Z-../DPE11LB4**	378	30000	75000
4	5.8	6500	1.75	253.3	**BK80Z-../DPE11LB4**	378	30000	75000
4	4.9	7700	1.5	300.6	**BK80Z-../DPE11LB4**	378	30000	75000
4	4.4	8600	1.35	336.7	**BK80Z-../DPE11LB4**	378	30000	75000
4	3.8	10000	1.15	389.0	**BK80Z-../DPE11LB4**	378	30000	75000
4	3.4	11200	1.05	435.7	**BK80Z-../DPE11LB4**	378	30000	75000
4	3.0	12700	0.91	499.5	**BK80Z-../DPE11LB4**	378	30000	75000
4	6.2	6100	3.0	234.6	**BK90Z-../DPE11LB4**	643	49400	120000
4	5.6	6800	2.7	262.5	**BK90Z-../DPE11LB4**	643	49400	120000
4	5.0	7600	2.4	295.6	**BK90Z-../DPE11LB4**	643	49400	120000
4	4.4	8600	2.2	330.7	**BK90Z-../DPE11LB4**	643	49400	120000
4	3.8	10000	1.85	389.1	**BK90Z-../DPE11LB4**	643	49400	120000
4	3.4	11200	1.65	435.3	**BK90Z-../DPE11LB4**	643	49400	120000
4	3.0	12700	1.45	499.2	**BK90Z-../DPE11LB4**	643	49400	120000
4	2.6	14600	1.25	558.5	**BK90Z-../DPE11LB4**	643	49400	120000
4	2.3	16600	1.1	637.7	**BK90Z-../DPE11LB4**	643	49400	120000
4	2.1	18100	1.0	713.5	**BK90Z-../DPE11LB4**	643	49400	120000
4	1.8	19800	0.93	821.0	**BK90G50-../DPE11LB4**	660	49400	120000
4	1.7	21200	0.87	882.3	**BK90G50-../DPE11LB4**	660	49400	120000

5.5 kW

P_N	50 Hz			i	Type	m		
	n_2	M_2	f_B					
[kW]	[1/min]	[Nm]	[—]	[:1]		[kg]	[N]	[N]
5.5	310	155	1.25	4.73	**BK30-../DPE11LB4C**	80	1550	8800
5.5	245	197	1.1	6.02	**BK30-../DPE11LB4C**	80	1690	9600
5.5	197	245	1.1	7.45	**BK30-../DPE11LB4C**	80	2200	10400
5.5	153	315	1.0	9.63	**BK30-../DPE11LB4C**	80	3150	11500
5.5	129	365	1.15	11.39	**BK30-../DPE11LB4C**	80	4150	11000
5.5	123	390	0.82	11.93	**BK30-../DPE11LB4C**	80	3650	12000
5.5	102	460	0.98	14.50	**BK30-../DPE11LB4C**	80	4900	12000
5.5	320	151	2.9	4.63	**BK40-../DPE11LB4C**	106	430	8900
5.5	245	197	2.4	6.02	**BK40-../DPE11LB4C**	106	470	9800
5.5	196	245	2.0	7.49	**BK40-../DPE11LB4C**	106	750	10500
5.5	158	305	1.6	9.31	**BK40-../DPE11LB4C**	106	1040	11200
5.5	132	355	2.0	11.17	**BK40-../DPE11LB4C**	106	4100	13100
5.5	124	385	1.3	11.86	**BK40-../DPE11LB4C**	106	1770	12200
5.5	102	460	1.7	14.50	**BK40-../DPE11LB4C**	106	4500	14300
5.5	82	570	1.35	18.05	**BK40-../DPE11LB4C**	106	4900	15300
5.5	66	710	1.1	22.44	**BK40-../DPE11LB4C**	106	5500	16500
5.5	52	900	0.87	28.59	**BK40-../DPE11LB4C**	106	6300	17000
5.5	151	310	3.0	9.73	**BK50-../DPE11LB4C**	136	5400	15400
5.5	147	325	2.5	10.00	**BK50-../DPE11LB4C**	136	1220	13200
5.5	106	445	2.4	13.95	**BK50-../DPE11LB4C**	136	6100	17400
5.5	97	485	2.2	15.19	**BK50-../DPE11LB4C**	136	6300	18000
5.5	82	580	1.25	17.92	**BK50-../DPE11LB4C**	136	4600	16800
5.5	76	620	1.7	19.33	**BK50-../DPE11LB4C**	136	6900	19200
5.5	56	840	1.25	26.51	**BK50-../DPE11LB4C**	136	7800	21200
5.5	42	1120	0.94	35.21	**BK50-../DPE11LB4C**	136	8700	23100
5.5	72	720	3.1	20.54	**BK60-../DPE11LB4C**	146	4400	20600
5.5	60	870	2.6	24.45	**BK60-../DPE11LB4C**	146	4850	22000
5.5	54	970	2.4	27.36	**BK60-../DPE11LB4C**	146	5600	23200
5.5	43.5	1200	1.9	33.78	**BK60-../DPE11LB4C**	146	6500	25200
5.5	39	1340	1.7	37.80	**BK60-../DPE11LB4C**	146	7300	26500
5.5	33	1590	1.45	45.05	**BK60-../DPE11LB4C**	146	8200	28300
5.5	29.5	1780	1.3	50.40	**BK60-../DPE11LB4C**	146	9100	29800

The torques marked (*) are maximum permissible torques for service factor f_B=1,0.

5.5 kW

P_N	50 Hz			i	Type	m		
	n_2	M_2	f_B					
[kW]	[1/min]	[Nm]	[—]	[:1]		[kg]	[N]	[N]
5.5	25	2100	1.1	58.95	**BK60-../DPE11LB4C**	146	9900	31500
5.5	22.5	2300	1.0	65.95	**BK60-../DPE11LB4C**	146	10900	33000
5.5	19	2750	0.84	78.13	**BK60-../DPE11LB4C**	146	11900	34000
5.5	32.5	1610	3.2	45.59	**BK70-../DPE11LB4C**	225	9000	37900
5.5	27.5	1910	2.7	54.15	**BK70-../DPE11LB4C**	225	9900	40200
5.5	24	2150	2.4	61.60	**BK70-../DPE11LB4C**	225	11500	42800
5.5	21	2500	2.1	70.23	**BK70-../DPE11LB4C**	225	12500	44800
5.5	18.5	2800	1.85	79.89	**BK70-../DPE11LB4C**	225	14300	47600
5.5	16.5	3150	1.65	90.96	**BK70-../DPE11LB4C**	225	15300	49900
5.5	14.5	3600	1.45	103.5	**BK70-../DPE11LB4C**	225	17200	50000
5.5	12.5	4200	1.25	120.2	**BK70-../DPE11LB4C**	225	18600	50000
5.5	11	4750	1.1	136.7	**BK70-../DPE11LB4C**	225	20700	50000
5.5	9.5	5500	0.95	154.4	**BK70-../DPE11LB4C**	225	21900	50000
5.5	8.4	6200	0.84	175.7	**BK70-../DPE11LB4C**	225	24100	50000
5.5	16.5	3150	3.3	91.53	**BK80-../DPE11LB4C**	340	18300	74200
5.5	14.5	3600	2.9	102.5	**BK80-../DPE11LB4C**	340	20500	75000
5.5	12.5	4200	2.5	117.5	**BK80-../DPE11LB4C**	340	22300	75000
5.5	11.5	4550	2.3	131.6	**BK80-../DPE11LB4C**	340	24900	75000
5.5	9.6	5400	1.95	153.1	**BK80-../DPE11LB4C**	340	27200	75000
5.5	8.6	6100	1.7	171.5	**BK80-../DPE11LB4C**	340	30000	75000
5.5	8.3	6300	1.85	177.6	**BK80Z-../DPE11LB4C**	382	30000	75000
5.5	7.4	7000	1.65	198.9	**BK80Z-../DPE11LB4C**	382	30000	75000
5.5	6.5	8000	1.45	226.1	**BK80Z-../DPE11LB4C**	382	30000	75000
5.5	5.8	9000	1.3	253.3	**BK80Z-../DPE11LB4C**	382	30000	75000
5.5	4.9	10700	1.05	300.6	**BK80Z-../DPE11LB4C**	382	30000	75000
5.5	4.4	11900	0.97	336.7	**BK80Z-../DPE11LB4C**	382	30000	75000
5.5	3.8	13800	0.83	389.0	**BK80Z-../DPE11LB4C**	382	30000	75000
5.5	8.4	6200	3.0	174.7	**BK90Z-../DPE11LB4C**	647	49400	120000
5.5	7.5	7000	2.6	195.4	**BK90Z-../DPE11LB4C**	647	49400	120000
5.5	6.3	8300	2.2	234.6	**BK90Z-../DPE11LB4C**	647	49400	120000
5.5	5.6	9300	2.0	262.5	**BK90Z-../DPE11LB4C**	647	49400	120000
5.5	5.0	10500	1.75	295.6	**BK90Z-../DPE11LB4C**	647	49400	120000
5.5	4.5	11600	1.6	330.7	**BK90Z-../DPE11LB4C**	647	49400	120000
5.5	3.8	13800	1.35	389.1	**BK90Z-../DPE11LB4C**	647	49400	120000
5.5	3.4	15400	1.2	435.3	**BK90Z-../DPE11LB4C**	647	49400	120000
5.5	3.0	17500	1.05	499.2	**BK90Z-../DPE11LB4C**	647	49400	120000
5.5	2.7	19400	0.95	558.5	**BK90Z-../DPE11LB4C**	647	49400	120000
5.5	2.3	22800	0.81	637.7	**BK90Z-../DPE11LB4C**	647	49400	120000

7.5 kW

P_N	50 Hz			i	Type	m		
	n_2	M_2	f_B					
[kW]	[1/min]	[Nm]	[—]	[:1]		[kg]	[N]	[N]
7.5	400	164	4.4	3.67	**BK50-../DPE13XA4**	147	115	9400
7.5	280	235	3.5	5.26	**BK50-../DPE13XA4**	147	130	10700
7.5	205	320	2.5	7.29	**BK50-../DPE13XA4**	147	620	111000
7.5	151	425	2.2	9.73	**BK50-../DPE13XA4**	147	5400	15400
7.5	146	450	1.8	10.00	**BK50-../DPE13XA4**	147	1220	13200
7.5	105	610	1.7	13.95	**BK50-../DPE13XA4**	147	6100	17400
7.5	97	660	1.6	15.19	**BK50-../DPE13XA4**	147	6300	18000
7.5	82	790	0.92	17.92	**BK50-../DPE13XA4**	147	4600	16800
7.5	76	840	1.25	19.33	**BK50-../DPE13XA4**	147	6900	19200
7.5	56	1150	0.91	26.51	**BK50-../DPE13XA4**	147	7800	21200
7.5	135	530	3.2	10.82	**BK60-../DPE13XA4**	159	3200	17000
7.5	118	600	3.1	12.38	**BK60-../DPE13XA4**	159	3500	17400
7.5	106	670	2.9	13.85	**BK60-../DPE13XA4**	159	3850	18000
7.5	102	700	2.8	14.41	**BK60-../DPE13XA4**	159	3650	18600
7.5	91	780	2.5	16.05	**BK60-../DPE13XA4**	159	4050	18800
7.5	80	890	2.5	18.36	**BK60-../DPE13XA4**	159	4000	19900
7.5	72	990	2.3	20.54	**BK60-../DPE13XA4**	159	4400	20600
7.5	60	1190	1.95	24.45	**BK60-../DPE13XA4**	159	4850	22000

The torques marked (*) are maximum permissible torques for service factor f_B=1,0.

7.5 kW

P_N	50 Hz			i	Type	m		
	n_2	M_2	f_B					
[kW]	[1/min]	[Nm]	[—]	[:1]		[kg]	[N]	[N]
7.5	54	1320	1.75	27.36	**BK60-../DPE13XA4**	159	5600	23200
7.5	43.5	1640	1.4	33.78	**BK60-../DPE13XA4**	159	6500	25200
7.5	39	1830	1.25	37.80	**BK60-../DPE13XA4**	159	7300	26500
7.5	32.5	2200	1.05	45.05	**BK60-../DPE13XA4**	159	8200	28300
7.5	29	2450	0.94	50.40	**BK60-../DPE13XA4**	159	9100	29800
7.5	25	2850	0.81	58.95	**BK60-../DPE13XA4**	159	9900	31500
7.5	47.5	1500	3.0	30.90	**BK70-../DPE13XA4**	238	7500	33600
7.5	42	1700	2.8	35.15	**BK70-../DPE13XA4**	238	8000	35000
7.5	36.5	1960	2.5	40.08	**BK70-../DPE13XA4**	238	8300	36300
7.5	32.5	2200	2.3	45.59	**BK70-../DPE13XA4**	238	9000	37900
7.5	27	2650	1.95	54.15	**BK70-../DPE13XA4**	238	9900	40200
7.5	24	2950	1.75	61.60	**BK70-../DPE13XA4**	238	11500	42800
7.5	21	3400	1.55	70.23	**BK70-../DPE13XA4**	238	12500	44800
7.5	18.5	3850	1.35	79.89	**BK70-../DPE13XA4**	238	14300	47600
7.5	16.5	4300	1.2	90.96	**BK70-../DPE13XA4**	238	15300	49900
7.5	14.5	4900	1.05	103.5	**BK70-../DPE13XA4**	238	17200	50000
7.5	12.5	5700	0.91	120.2	**BK70-../DPE13XA4**	238	18600	50000
7.5	11	6500	0.8	136.7	**BK70-../DPE13XA4**	238	20700	50000
7.5	24.5	2900	3.2	59.60	**BK80-../DPE13XA4**	352	15700	65500
7.5	21	3400	2.8	70.72	**BK80-../DPE13XA4**	352	16600	68700
7.5	18.5	3850	2.6	79.22	**BK80-../DPE13XA4**	352	17600	71300
7.5	16	4450	2.3	91.53	**BK80-../DPE13XA4**	352	18300	74200
7.5	14.5	4900	2.1	102.5	**BK80-../DPE13XA4**	352	20500	75000
7.5	12.5	5700	1.85	117.5	**BK80-../DPE13XA4**	352	22300	75000
7.5	11.5	6200	1.7	131.6	**BK80-../DPE13XA4**	352	24900	75000
7.5	9.6	7400	1.4	153.1	**BK80-../DPE13XA4**	352	27200	75000
7.5	8.6	8300	1.25	171.5	**BK80-../DPE13XA4**	352	30000	75000
7.5	8.3	8600	1.35	177.6	**BK80Z-../DPE13XA4**	395	30000	75000
7.5	7.4	9600	1.2	198.9	**BK80Z-../DPE13XA4**	395	30000	75000
7.5	6.5	11000	1.05	226.1	**BK80Z-../DPE13XA4**	395	30000	75000
7.5	5.8	12300	0.93	253.3	**BK80Z-../DPE13XA4**	395	30000	75000
7.5	12.5	5700	2.9	117.0	**BK90-../DPE13XA4**	604	39200	113000
7.5	11.5	6200	2.7	130.9	**BK90-../DPE13XA4**	604	42700	119400
7.5	9.8	7300	2.3	149.5	**BK90-../DPE13XA4**	604	45600	120000
7.5	8.8	8100	2.1	167.2	**BK90-../DPE13XA4**	604	49400	120000
7.5	8.4	8500	2.2	174.7	**BK90Z-../DPE13XA4**	660	49400	120000
7.5	7.5	9500	1.95	195.4	**BK90Z-../DPE13XA4**	660	49400	120000
7.5	6.3	11300	1.65	234.6	**BK90Z-../DPE13XA4**	660	49400	120000
7.5	5.6	12700	1.45	262.5	**BK90Z-../DPE13XA4**	660	49400	120000
7.5	5.0	14300	1.3	295.6	**BK90Z-../DPE13XA4**	660	49400	120000
7.5	4.5	15900	1.15	330.7	**BK90Z-../DPE13XA4**	660	49400	120000
7.5	3.8	18800	0.98	389.1	**BK90Z-../DPE13XA4**	660	49400	120000
7.5	3.4	21000	0.88	435.3	**BK90Z-../DPE13XA4**	660	49400	120000

9.5 kW

P_N	50 Hz			i	Type	m		
	n_2	M_2	f_B					
[kW]	[1/min]	[Nm]	[—]	[:1]		[kg]	[N]	[N]
9.5	405	205	3.5	3.67	**BK50-../DPE16LB4**	183	115	9400
9.5	285	290	2.8	5.26	**BK50-../DPE16LB4**	183	130	10700
9.5	205	405	2.0	7.29	**BK50-../DPE16LB4**	183	620	111000
9.5	152	530	1.75	9.73	**BK50-../DPE16LB4**	183	5400	15400
9.5	148	560	1.45	10.00	**BK50-../DPE16LB4**	183	1220	13200
9.5	106	770	1.35	13.95	**BK50-../DPE16LB4**	183	6100	17400
9.5	98	830	1.25	15.19	**BK50-../DPE16LB4**	183	6300	18000
9.5	77	1060	0.99	19.33	**BK50-../DPE16LB4**	183	6900	19200
9.5	205	440	3.3	7.29	**BK60-../DPE16LB4**	195	2800	14900
9.5	137	660	2.5	10.82	**BK60-../DPE16LB4**	195	3200	17000
9.5	120	750	2.5	12.38	**BK60-../DPE16LB4**	195	3500	17400
9.5	107	840	2.3	13.85	**BK60-../DPE16LB4**	195	3850	18000
9.5	103	880	2.2	14.41	**BK60-../DPE16LB4**	195	3650	18600

The torques marked (*) are maximum permissible torques for service factor f_B=1,0.

9.5 kW

P_N	50 Hz			i	Type	m		
	n_2	M_2	f_B					
[kW]	[1/min]	[Nm]	[—]	[:1]		[kg]	[N]	[N]
9.5	92	980	2.0	16.05	**BK60-../DPE16LB4**	195	4050	18800
9.5	81	1120	1.95	18.36	**BK60-../DPE16LB4**	195	4000	19900
9.5	72	1260	1.8	20.54	**BK60-../DPE16LB4**	195	4400	20600
9.5	61	1480	1.55	24.45	**BK60-../DPE16LB4**	195	4850	22000
9.5	54	1680	1.35	27.36	**BK60-../DPE16LB4**	195	5600	23200
9.5	44	2050	1.1	33.78	**BK60-../DPE16LB4**	195	6500	25200
9.5	39.5	2250	1.0	37.80	**BK60-../DPE16LB4**	195	7300	26500
9.5	33	2700	0.85	45.05	**BK60-../DPE16LB4**	195	8200	28300
9.5	98	920	3.3	15.16	**BK70-../DPE16LB4**	278	5600	25800
9.5	86	1050	3.3	17.24	**BK70-../DPE16LB4**	278	6500	29200
9.5	68	1330	3.1	21.88	**BK70-../DPE16LB4**	278	6500	30200
9.5	60	1510	2.8	24.89	**BK70-../DPE16LB4**	278	7000	31500
9.5	48	1890	2.4	30.90	**BK70-../DPE16LB4**	278	7500	33600
9.5	42	2150	2.2	35.15	**BK70-../DPE16LB4**	278	8000	35000
9.5	37	2450	2.0	40.08	**BK70-../DPE16LB4**	278	8300	36300
9.5	32.5	2750	1.85	45.59	**BK70-../DPE16LB4**	278	9000	37900
9.5	27.5	3250	1.6	54.15	**BK70-../DPE16LB4**	278	9900	40200
9.5	24	3750	1.4	61.60	**BK70-../DPE16LB4**	278	11500	42800
9.5	21.5	4200	1.25	70.23	**BK70-../DPE16LB4**	278	12500	44800
9.5	18.5	4900	1.05	79.89	**BK70-../DPE16LB4**	278	14300	47600
9.5	16.5	5400	0.96	90.96	**BK70-../DPE16LB4**	278	15300	49900
9.5	14.5	6200	0.84	103.5	**BK70-../DPE16LB4**	278	17200	50000
9.5	35.5	2550	3.2	41.78	**BK80-../DPE16LB4**	388	13500	58700
9.5	32	2800	3.1	46.80	**BK80-../DPE16LB4**	388	14300	60900
9.5	28	3200	2.8	53.21	**BK80-../DPE16LB4**	388	14800	63100
9.5	25	3600	2.6	59.60	**BK80-../DPE16LB4**	388	15700	65500
9.5	21	4300	2.2	70.72	**BK80-../DPE16LB4**	388	16600	68700
9.5	19	4750	2.1	79.22	**BK80-../DPE16LB4**	388	17600	71300
9.5	16.5	5400	1.95	91.53	**BK80-../DPE16LB4**	388	18300	74200
9.5	14.5	6200	1.7	102.5	**BK80-../DPE16LB4**	388	20500	75000
9.5	13	6900	1.5	117.5	**BK80-../DPE16LB4**	388	22300	75000
9.5	11.5	7800	1.35	131.6	**BK80-../DPE16LB4**	388	24900	75000
9.5	9.7	9300	1.15	153.1	**BK80-../DPE16LB4**	388	27200	75000
9.5	8.7	10400	1.0	171.5	**BK80-../DPE16LB4**	388	30000	75000
9.5	8.4	10800	1.05	177.6	**BK80Z-../DPE16LB4**	431	30000	75000
9.5	7.5	12000	0.96	198.9	**BK80Z-../DPE16LB4**	431	30000	75000
9.5	6.6	13700	0.84	226.1	**BK80Z-../DPE16LB4**	431	30000	75000
9.5	16.5	5400	3.1	91.19	**BK90-../DPE16LB4**	641	33300	101000
9.5	14.5	6200	2.7	102.0	**BK90-../DPE16LB4**	641	36600	107000
9.5	13	6900	2.4	117.0	**BK90-../DPE16LB4**	641	39200	113000
9.5	11.5	7800	2.2	130.9	**BK90-../DPE16LB4**	641	42700	119400
9.5	9.9	9100	1.85	149.5	**BK90-../DPE16LB4**	641	45600	120000
9.5	8.9	10100	1.65	167.2	**BK90-../DPE16LB4**	641	49400	120000
9.5	8.5	10600	1.75	174.7	**BK90Z-../DPE16LB4**	700	49400	120000
9.5	7.6	11900	1.55	195.4	**BK90Z-../DPE16LB4**	700	49400	120000
9.5	6.3	14400	1.3	234.6	**BK90Z-../DPE16LB4**	700	49400	120000
9.5	5.7	15900	1.15	262.5	**BK90Z-../DPE16LB4**	700	49400	120000
9.5	5.0	18100	1.0	295.6	**BK90Z-../DPE16LB4**	700	49400	120000
9.5	4.5	20100	0.92	330.7	**BK90Z-../DPE16LB4**	700	49400	120000

11 kW

P_N	50 Hz			i	Type	m		
	n_2	M_2	f_B					
[kW]	[1/min]	[Nm]	[—]	[:1]		[kg]	[N]	[N]
11	405	235	3.1	3.67	**BK50-../DPE16LB4**	183	115	9400
11	285	335	2.4	5.26	**BK50-../DPE16LB4**	183	130	10700
11	205	470	1.75	7.29	**BK50-../DPE16LB4**	183	620	111000
11	152	620	1.5	9.73	**BK50-../DPE16LB4**	183	5400	15400
11	148	650	1.25	10.00	**BK50-../DPE16LB4**	183	1220	13200
11	106	890	1.2	13.95	**BK50-../DPE16LB4**	183	6100	17400
11	98	960	1.1	15.19	**BK50-../DPE16LB4**	183	6300	18000
11	77	1220	0.86	19.33	**BK50-../DPE16LB4**	183	6900	19200

The torques marked (*) are maximum permissible torques for service factor f_B=1,0.

11 kW

P_N	50 Hz			i	**Type**	m		
	n_2	M_2	f_B					
[kW]	[1/min]	[Nm]	[—]	[:1]		[kg]	[N]	[N]
11	205	510	2.9	7.29	**BK60-../DPE16LB4**	195	2800	14900
11	137	760	2.2	10.82	**BK60-../DPE16LB4**	195	3200	17000
11	120	870	2.2	12.38	**BK60-../DPE16LB4**	195	3500	17400
11	107	980	2.0	13.85	**BK60-../DPE16LB4**	195	3850	18000
11	103	1010	1.9	14.41	**BK60-../DPE16LB4**	195	3650	18600
11	92	1140	1.75	16.05	**BK60-../DPE16LB4**	195	4050	18800
11	81	1290	1.7	18.36	**BK60-../DPE16LB4**	195	4000	19900
11	72	1450	1.55	20.54	**BK60-../DPE16LB4**	195	4400	20600
11	61	1720	1.35	24.45	**BK60-../DPE16LB4**	195	4850	22000
11	54	1940	1.2	27.36	**BK60-../DPE16LB4**	195	5600	23200
11	44	2350	0.98	33.78	**BK60-../DPE16LB4**	195	6500	25200
11	39.5	2650	0.87	37.80	**BK60-../DPE16LB4**	195	7300	26500
11	108	970	3.1	13.70	**BK70-../DPE16LB4**	278	5400	24800
11	98	1070	2.9	15.16	**BK70-../DPE16LB4**	278	5600	25800
11	86	1220	2.9	17.24	**BK70-../DPE16LB4**	278	6500	29200
11	68	1540	2.6	21.88	**BK70-../DPE16LB4**	278	6500	30200
11	60	1750	2.4	24.89	**BK70-../DPE16LB4**	278	7000	31500
11	48	2150	2.1	30.90	**BK70-../DPE16LB4**	278	7500	33600
11	42	2500	1.9	35.15	**BK70-../DPE16LB4**	278	8000	35000
11	37	2800	1.75	40.08	**BK70-../DPE16LB4**	278	8300	36300
11	32.5	3200	1.6	45.59	**BK70-../DPE16LB4**	278	9000	37900
11	27.5	3800	1.35	54.15	**BK70-../DPE16LB4**	278	9900	40200
11	24	4350	1.2	61.60	**BK70-../DPE16LB4**	278	11500	42800
11	21.5	4850	1.05	70.23	**BK70-../DPE16LB4**	278	12500	44800
11	18.5	5600	0.93	79.89	**BK70-../DPE16LB4**	278	14300	47600
11	16.5	6300	0.83	90.96	**BK70-../DPE16LB4**	278	15300	49900
11	43.5	2400	3.3	34.22	**BK80-../DPE16LB4**	388	12600	55400
11	35.5	2950	2.8	41.78	**BK80-../DPE16LB4**	388	13500	58700
11	32	3250	2.6	46.80	**BK80-../DPE16LB4**	388	14300	60900
11	28	3750	2.4	53.21	**BK80-../DPE16LB4**	388	14800	63100
11	25	4200	2.2	59.60	**BK80-../DPE16LB4**	388	15700	65500
11	21	5000	1.95	70.72	**BK80-../DPE16LB4**	388	16600	68700
11	19	5500	1.85	79.22	**BK80-../DPE16LB4**	388	17600	71300
11	16.5	6300	1.65	91.53	**BK80-../DPE16LB4**	388	18300	74200
11	14.5	7200	1.45	102.5	**BK80-../DPE16LB4**	388	20500	75000
11	13	8000	1.3	117.5	**BK80-../DPE16LB4**	388	22300	75000
11	11.5	9100	1.15	131.6	**BK80-../DPE16LB4**	388	24900	75000
11	9.7	10800	0.97	153.1	**BK80-../DPE16LB4**	388	27200	75000
11	8.7	12000	0.88	171.5	**BK80-../DPE16LB4**	388	30000	75000
11	8.4	12500	0.92	177.6	**BK80Z-../DPE16LB4**	431	30000	75000
11	7.5	14000	0.82	198.9	**BK80Z-../DPE16LB4**	431	30000	75000
11	19.5	5300	3.2	77.51	**BK90-../DPE16LB4**	641	30300	94400
11	16.5	6300	2.7	91.19	**BK90-../DPE16LB4**	641	33300	101000
11	14.5	7200	2.3	102.0	**BK90-../DPE16LB4**	641	36600	107000
11	13	8000	2.1	117.0	**BK90-../DPE16LB4**	641	39200	113000
11	11.5	9100	1.85	130.9	**BK90-../DPE16LB4**	641	42700	119400
11	9.9	10600	1.6	149.5	**BK90-../DPE16LB4**	641	45600	120000
11	8.9	11800	1.4	167.2	**BK90-../DPE16LB4**	641	49400	120000
11	8.5	12300	1.5	174.7	**BK90Z-../DPE16LB4**	700	49400	120000
11	7.6	13800	1.35	195.4	**BK90Z-../DPE16LB4**	700	49400	120000
11	6.3	16600	1.1	234.6	**BK90Z-../DPE16LB4**	700	49400	120000
11	5.7	18400	1.0	262.5	**BK90Z-../DPE16LB4**	700	49400	120000
11	5.0	21000	0.88	295.6	**BK90Z-../DPE16LB4**	700	49400	120000

15 kW

P_N	50 Hz			i	**Type**	m		
	n_2	M_2	f_B					
[kW]	[1/min]	[Nm]	[—]	[:1]		[kg]	[N]	[N]
15	405	325	2.2	3.67	**BK50-../DPE16XB4**	193	115	9400
15	285	460	1.75	5.26	**BK50-../DPE16XB4**	193	130	10700
15	205	640	1.25	7.29	**BK50-../DPE16XB4**	193	620	111000
15	152	840	1.1	9.73	**BK50-../DPE16XB4**	193	5400	15400

The torques marked (*) are maximum permissible torques for service factor f_B=1,0.

15 kW

P_N	50 Hz			i	Type	m		
	n_2	M_2	f_B					
[kW]	[1/min]	[Nm]	[—]	[:1]		[kg]	[N]	[N]
15	148	890	0.91	10.00	**BK50-../DPE16XB4**	193	1220	13200
15	106	1210	0.87	13.95	**BK50-../DPE16XB4**	193	6100	17400
15	98	1310	0.8	15.19	**BK50-../DPE16XB4**	193	6300	18000
15	205	690	2.1	7.29	**BK60-../DPE16XB4**	205	2800	14900
15	137	1040	1.6	10.82	**BK60-../DPE16XB4**	205	3200	17000
15	120	1190	1.6	12.38	**BK60-../DPE16XB4**	205	3500	17400
15	107	1330	1.5	13.85	**BK60-../DPE16XB4**	205	3850	18000
15	103	1390	1.4	14.41	**BK60-../DPE16XB4**	205	3650	18600
15	92	1550	1.25	16.05	**BK60-../DPE16XB4**	205	4050	18800
15	81	1760	1.25	18.36	**BK60-../DPE16XB4**	205	4000	19900
15	72	1980	1.15	20.54	**BK60-../DPE16XB4**	205	4400	20600
15	61	2300	1.0	24.45	**BK60-../DPE16XB4**	205	4850	22000
15	54	2650	0.87	27.36	**BK60-../DPE16XB4**	205	5600	23200
15	108	1320	2.3	13.70	**BK70-../DPE16XB4**	288	5400	24800
15	98	1460	2.1	15.16	**BK70-../DPE16XB4**	288	5600	25800
15	86	1660	2.1	17.24	**BK70-../DPE16XB4**	288	6500	29200
15	68	2100	1.95	21.88	**BK70-../DPE16XB4**	288	6500	30200
15	60	2350	1.8	24.89	**BK70-../DPE16XB4**	288	7000	31500
15	48	2950	1.55	30.90	**BK70-../DPE16XB4**	288	7500	33600
15	42	3400	1.4	35.15	**BK70-../DPE16XB4**	288	8000	35000
15	37	3850	1.25	40.08	**BK70-../DPE16XB4**	288	8300	36300
15	32.5	4400	1.15	45.59	**BK70-../DPE16XB4**	288	9000	37900
15	27.5	5200	1.0	54.15	**BK70-../DPE16XB4**	288	9900	40200
15	24	5900	0.88	61.60	**BK70-../DPE16XB4**	288	11500	42800
15	48.5	2950	2.5	30.56	**BK80-../DPE16XB4**	398	11900	53400
15	43.5	3250	2.4	34.22	**BK80-../DPE16XB4**	398	12600	55400
15	35.5	4000	2.1	41.78	**BK80-../DPE16XB4**	398	13500	58700
15	32	4450	1.95	46.80	**BK80-../DPE16XB4**	398	14300	60900
15	28	5100	1.75	53.21	**BK80-../DPE16XB4**	398	14800	63100
15	25	5700	1.6	59.60	**BK80-../DPE16XB4**	398	15700	65500
15	21	6800	1.4	70.72	**BK80-../DPE16XB4**	398	16600	68700
15	19	7500	1.35	79.22	**BK80-../DPE16XB4**	398	17600	71300
15	16.5	8600	1.2	91.53	**BK80-../DPE16XB4**	398	18300	74200
15	14.5	9800	1.05	102.5	**BK80-../DPE16XB4**	398	20500	75000
15	13	11000	0.95	117.5	**BK80-../DPE16XB4**	398	22300	75000
15	11.5	12400	0.85	131.6	**BK80-../DPE16XB4**	398	24900	75000
15	27	5300	3.0	54.98	**BK90-../DPE16XB4**	651	24000	81000
15	24	5900	2.8	61.52	**BK90-../DPE16XB4**	651	25500	84600
15	21.5	6600	2.5	69.27	**BK90-../DPE16XB4**	651	27200	88900
15	19.5	7300	2.3	77.51	**BK90-../DPE16XB4**	651	30300	94400
15	16.5	8600	1.95	91.19	**BK90-../DPE16XB4**	651	33300	101000
15	14.5	9800	1.7	102.0	**BK90-../DPE16XB4**	651	36600	107000
15	13	11000	1.55	117.0	**BK90-../DPE16XB4**	651	39200	113000
15	11.5	12400	1.35	130.9	**BK90-../DPE16XB4**	651	42700	119400
15	9.9	14400	1.15	149.5	**BK90-../DPE16XB4**	651	45600	120000
15	8.9	16000	1.05	167.2	**BK90-../DPE16XB4**	651	49400	120000
15	8.5	16800	1.1	174.7	**BK90Z-../DPE16XB4**	710	49400	120000
15	7.6	18800	0.98	195.4	**BK90Z-../DPE16XB4**	710	49400	120000
15	6.3	22700	0.81	234.6	**BK90Z-../DPE16XB4**	710	49400	120000

18.5 kW

P_N	50 Hz			i	Type	m		
	n_2	M_2	f_B					
[kW]	[1/min]	[Nm]	[—]	[:1]		[kg]	[N]	[N]
18.5	405	400	1.8	3.67	**BK50-../DPE18LB4**	245	115	9400
18.5	285	570	1.4	5.26	**BK50-../DPE18LB4**	245	130	10700
18.5	205	790	1.05	7.29	**BK50-../DPE18LB4**	245	620	111000
18.5	205	860	1.7	7.29	**BK60-../DPE18LB4**	252	2800	14900
18.5	137	1280	1.3	10.82	**BK60-../DPE18LB4**	252	3200	17000
18.5	103	1710	1.15	14.41	**BK60-../DPE18LB4**	252	3650	18600

The torques marked (*) are maximum permissible torques for service factor f_B=1,0.

18.5 kW

P_N	50 Hz			i	**Type**	m		
	n_2	M_2	f_B					
[kW]	[1/min]	[Nm]	[—]	[:1]		[kg]	[N]	[N]
18.5	81	2150	1.0	18.36	**BK60-../DPE18LB4**	252	4000	19900
18.5	73	2400	0.94	20.54	**BK60-../DPE18LB4**	252	4400	20600
18.5	61	2850	0.81	24.45	**BK60-../DPE18LB4**	252	4850	22000
18.5	98	1800	1.7	15.16	**BK70-../DPE18LB4**	329	5600	25800
18.5	86	2050	1.7	17.24	**BK70-../DPE18LB4**	329	6500	29200
18.5	68	2550	1.6	21.88	**BK70-../DPE18LB4**	329	6500	30200
18.5	60	2900	1.45	24.89	**BK70-../DPE18LB4**	329	7000	31500
18.5	48	3650	1.25	30.90	**BK70-../DPE18LB4**	329	7500	33600
18.5	42.5	4150	1.15	35.15	**BK70-../DPE18LB4**	329	8000	35000
18.5	37	4750	1.05	40.08	**BK70-../DPE18LB4**	329	8300	36300
18.5	32.5	5400	0.95	45.59	**BK70-../DPE18LB4**	329	9000	37900
18.5	27.5	6400	0.81	54.15	**BK70-../DPE18LB4**	329	9900	40200
18.5	104	1690	2.5	14.34	**BK80-../DPE18LB4**	443	7900	36200
18.5	94	1870	2.6	15.88	**BK80-../DPE18LB4**	443	8400	38600
18.5	84	2100	2.5	17.79	**BK80-../DPE18LB4**	443	9400	42100
18.5	77	2250	2.6	19.35	**BK80-../DPE18LB4**	443	9500	44000
18.5	67	2600	2.6	22.19	**BK80-../DPE18LB4**	443	10500	48500
18.5	60	2900	2.4	24.85	**BK80-../DPE18LB4**	443	11200	50400
18.5	48.5	3600	2.1	30.56	**BK80-../DPE18LB4**	443	11900	53400
18.5	43.5	4050	1.95	34.22	**BK80-../DPE18LB4**	443	12600	55400
18.5	35.5	4950	1.65	41.78	**BK80-../DPE18LB4**	443	13500	58700
18.5	32	5500	1.55	46.80	**BK80-../DPE18LB4**	443	14300	60900
18.5	28	6300	1.4	53.21	**BK80-../DPE18LB4**	443	14800	63100
18.5	25	7000	1.3	59.60	**BK80-../DPE18LB4**	443	15700	65500
18.5	21	8400	1.15	70.72	**BK80-../DPE18LB4**	443	16600	68700
18.5	19	9200	1.1	79.22	**BK80-../DPE18LB4**	443	17600	71300
18.5	16.5	10700	0.97	91.53	**BK80-../DPE18LB4**	443	18300	74200
18.5	14.5	12100	0.87	102.5	**BK80-../DPE18LB4**	443	20500	75000
18.5	36.5	4800	3.1	40.94	**BK90-../DPE18LB4**	698	21400	73100
18.5	32.5	5400	2.9	45.80	**BK90-../DPE18LB4**	698	22700	76300
18.5	27	6500	2.5	54.98	**BK90-../DPE18LB4**	698	24000	81000
18.5	24.5	7200	2.3	61.52	**BK90-../DPE18LB4**	698	25500	84600
18.5	21.5	8200	2.0	69.27	**BK90-../DPE18LB4**	698	27200	88900
18.5	19.5	9000	1.85	77.51	**BK90-../DPE18LB4**	698	30300	94400
18.5	16.5	10700	1.55	91.19	**BK90-../DPE18LB4**	698	33300	101000
18.5	15	11700	1.45	102.0	**BK90-../DPE18LB4**	698	36600	107000
18.5	13	13500	1.25	117.0	**BK90-../DPE18LB4**	698	39200	113000
18.5	11.5	15300	1.1	130.9	**BK90-../DPE18LB4**	698	42700	119400
18.5	9.9	17800	0.94	149.5	**BK90-../DPE18LB4**	698	45600	120000
18.5	8.9	19800	0.85	167.2	**BK90-../DPE18LB4**	698	49400	120000
18.5	8.5	20700	0.89	174.7	**BK90Z-../DPE18LB4**	751	49400	120000
18.5	7.6	23200	0.8	195.4	**BK90Z-../DPE18LB4**	751	49400	120000

22 kW

P_N	50 Hz			i	**Type**	m		
	n_2	M_2	f_B					
[kW]	[1/min]	[Nm]	[—]	[:1]		[kg]	[N]	[N]
22	98	2100	1.45	15.16	**BK70-../DPE18XB4**	347	5600	25800
22	86	2400	1.45	17.24	**BK70-../DPE18XB4**	347	6500	29200
22	68	3050	1.35	21.88	**BK70-../DPE18XB4**	347	6500	30200
22	60	3500	1.2	24.89	**BK70-../DPE18XB4**	347	7000	31500
22	48	4350	1.05	30.90	**BK70-../DPE18XB4**	347	7500	33600
22	42	5000	0.95	35.15	**BK70-../DPE18XB4**	347	8000	35000
22	37	5600	0.87	40.08	**BK70-../DPE18XB4**	347	8300	36300
22	32.5	6400	0.8	45.59	**BK70-../DPE18XB4**	347	9000	37900
22	103	2000	2.1	14.34	**BK80-../DPE18XB4**	461	7900	36200
22	93	2250	2.1	15.88	**BK80-../DPE18XB4**	461	8400	38600
22	83	2500	2.1	17.79	**BK80-../DPE18XB4**	461	9400	42100
22	77	2700	2.1	19.35	**BK80-../DPE18XB4**	461	9500	44000
22	67	3100	2.2	22.19	**BK80-../DPE18XB4**	461	10500	48500
22	60	3500	2.0	24.85	**BK80-../DPE18XB4**	461	11200	50400

The torques marked (*) are maximum permissible torques for service factor f_B=1,0.

22 kW

P_N	50 Hz			i	Type	m		
	n_2	M_2	f_B					
[kW]	[1/min]	[Nm]	[—]	[:1]		[kg]	[N]	[N]
22	48.5	4300	1.75	30.56	**BK80-../DPE18XB4**	461	11900	53400
22	43.5	4800	1.65	34.22	**BK80-../DPE18XB4**	461	12600	55400
22	35.5	5900	1.4	41.78	**BK80-../DPE18XB4**	461	13500	58700
22	32	6500	1.3	46.80	**BK80-../DPE18XB4**	461	14300	60900
22	28	7500	1.2	53.21	**BK80-../DPE18XB4**	461	14800	63100
22	25	8400	1.1	59.60	**BK80-../DPE18XB4**	461	15700	65500
22	21	10000	0.96	70.72	**BK80-../DPE18XB4**	461	16600	68700
22	19	11000	0.91	79.22	**BK80-../DPE18XB4**	461	17600	71300
22	16.5	12700	0.82	91.53	**BK80-../DPE18XB4**	461	18300	74200
22	48.5	4300	3.1	30.47	**BK90-../DPE18XB4**	716	19100	65900
22	43.5	4800	2.9	34.09	**BK90-../DPE18XB4**	716	20300	68800
22	36.5	5700	2.6	40.94	**BK90-../DPE18XB4**	716	21400	73100
22	32.5	6400	2.4	45.80	**BK90-../DPE18XB4**	716	22700	76300
22	27	7700	2.1	54.98	**BK90-../DPE18XB4**	716	24000	81000
22	24	8700	1.95	61.52	**BK90-../DPE18XB4**	716	25500	84600
22	21.5	9700	1.75	69.27	**BK90-../DPE18XB4**	716	27200	88900
22	19.5	10700	1.55	77.51	**BK90-../DPE18XB4**	716	30300	94400
22	16.5	12700	1.3	91.19	**BK90-../DPE18XB4**	716	33300	101000
22	14.5	14400	1.15	102.0	**BK90-../DPE18XB4**	716	36600	107000
22	13	16100	1.05	117.0	**BK90-../DPE18XB4**	716	39200	113000
22	11.5	18200	0.92	130.9	**BK90-../DPE18XB4**	716	42700	119400

30 kW

P_N	50 Hz			i	Type	m		
	n_2	M_2	f_B					
[kW]	[1/min]	[Nm]	[—]	[:1]		[kg]	[N]	[N]
30	98	2900	1.05	15.16	**BK70-../DPE20XA4**	502	5600	25800
30	86	3300	1.05	17.24	**BK70-../DPE20XA4**	502	6500	29200
30	68	4200	0.97	21.88	**BK70-../DPE20XA4**	502	6500	30200
30	60	4750	0.9	24.89	**BK70-../DPE20XA4**	502	7000	31500
30	104	2750	1.55	14.34	**BK80-../DPE20XA4**	614	7900	36200
30	94	3000	1.6	15.88	**BK80-../DPE20XA4**	614	8400	38600
30	84	3400	1.55	17.79	**BK80-../DPE20XA4**	614	9400	42100
30	77	3700	1.55	19.35	**BK80-../DPE20XA4**	614	9500	44000
30	67	4250	1.6	22.19	**BK80-../DPE20XA4**	614	10500	48500
30	60	4750	1.5	24.85	**BK80-../DPE20XA4**	614	11200	50400
30	48.5	5900	1.25	30.56	**BK80-../DPE20XA4**	614	11900	53400
30	43.5	6500	1.2	34.22	**BK80-../DPE20XA4**	614	12600	55400
30	35.5	8000	1.05	41.78	**BK80-../DPE20XA4**	614	13500	58700
30	32	8900	0.96	46.80	**BK80-../DPE20XA4**	614	14300	60900
30	28	10200	0.87	53.21	**BK80-../DPE20XA4**	614	14800	63100
30	25	11400	0.81	59.60	**BK80-../DPE20XA4**	614	15700	65500
30	92	3100	3.3	16.21	**BK90-../DPE20XA4**	869	15400	52400
30	82	3450	3.3	18.07	**BK90-../DPE20XA4**	869	15600	54400
30	74	3850	3.1	20.21	**BK90-../DPE20XA4**	869	16600	56700
30	67	4250	2.9	22.29	**BK90-../DPE20XA4**	869	16900	59100
30	60	4750	2.7	24.94	**BK90-../DPE20XA4**	869	18000	61700
30	49	5800	2.3	30.47	**BK90-../DPE20XA4**	869	19100	65900
30	43.5	6500	2.2	34.09	**BK90-../DPE20XA4**	869	20300	68800
30	36.5	7800	1.9	40.94	**BK90-../DPE20XA4**	869	21400	73100
30	32.5	8800	1.75	45.80	**BK90-../DPE20XA4**	869	22700	76300
30	27	10600	1.5	54.98	**BK90-../DPE20XA4**	869	24000	81000
30	24.5	11600	1.45	61.52	**BK90-../DPE20XA4**	869	25500	84600
30	21.5	13300	1.25	69.27	**BK90-../DPE20XA4**	869	27200	88900
30	19.5	14600	1.15	77.51	**BK90-../DPE20XA4**	869	30300	94400
30	16.5	17300	0.97	91.19	**BK90-../DPE20XA4**	869	33300	101000
30	15	19100	0.88	102.0	**BK90-../DPE20XA4**	869	36600	107000

The torques marked (*) are maximum permissible torques for service factor f_B=1,0.

37 kW

P_N	50 Hz			i	**Type**	m		
	n_2	M_2	f_B					
[kW]	[1/min]	[Nm]	[—]	[:1]		[kg]	[N]	[N]
37	104	3350	1.3	14.34	**BK80-../DPE22MA4**	670	7900	36200
37	94	3750	1.3	15.88	**BK80-../DPE22MA4**	670	8400	38600
37	84	4200	1.25	17.79	**BK80-../DPE22MA4**	670	9400	42100
37	77	4550	1.25	19.35	**BK80-../DPE22MA4**	670	9500	44000
37	67	5200	1.3	22.19	**BK80-../DPE22MA4**	670	10500	48500
37	60	5800	1.2	24.85	**BK80-../DPE22MA4**	670	11200	50400
37	48.5	7200	1.05	30.56	**BK80-../DPE22MA4**	670	11900	53400
37	103	3400	2.7	14.49	**BK90-../DPE22MA4**	925	14500	50400
37	92	3800	2.7	16.21	**BK90-../DPE22MA4**	925	15400	52400
37	82	4300	2.7	18.07	**BK90-../DPE22MA4**	925	15600	54400
37	74	4750	2.5	20.21	**BK90-../DPE22MA4**	925	16600	56700
37	67	5200	2.4	22.29	**BK90-../DPE22MA4**	925	16900	59100
37	60	5800	2.2	24.94	**BK90-../DPE22MA4**	925	18000	61700
37	49	7200	1.9	30.47	**BK90-../DPE22MA4**	925	19100	65900
37	43.5	8100	1.75	34.09	**BK90-../DPE22MA4**	925	20300	68800
37	36.5	9600	1.55	40.94	**BK90-../DPE22MA4**	925	21400	73100
37	32.5	10800	1.45	45.80	**BK90-../DPE22MA4**	925	22700	76300
37	27	13000	1.25	54.98	**BK90-../DPE22MA4**	925	24000	81000
37	24.5	14400	1.15	61.52	**BK90-../DPE22MA4**	925	25500	84600
37	21.5	16400	1.0	69.27	**BK90-../DPE22MA4**	925	27200	88900

The torques marked (*) are maximum permissible torques for service factor f_B=1,0.

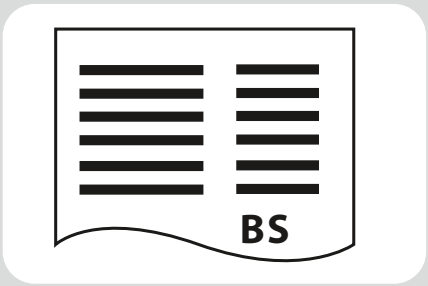

9

BS-series worm-geared motors - Selection

Description of worm-gear units 417
Sizes 417
Efficiency 417
Bauer service factors (f_B) for worm-geared motors 417
Continuous operation without switching frequency Z ≤1/h 417
Switching duty 418
Ambient temperature 418
Bauer service factor 418
Explanation of shock classification 418
Key to abbreviations 419
Selection tables, worm-geared motors 419
Selection - worm-geared motors DSE - IE1 420
Selection - worm-geared motors DHE - IE2 439
Selection - worm-geared motors DPE - IE3 458

Sizes

Bauer BS-series worm-geared motors are normally supplied in eight frame sizes and with torques of 25 to 1,000 Nm. Higher torques are available on request. The gear unit is accommodated in a sturdy cast housing.

Efficiency

The efficiency of worm-geared motors depends on numerous factors, including lubrication, extent of wear, temperature and vibration. Calculated efficiency, therefore, is merely a guideline value. Please consult BAUER and state the boundary conditions if efficiency or self-locking capability are important factors for your application.

Bauer service factors (f_B) for worm-geared motors

Worm gears transmit torque by sliding friction only, which means that losses and temperature are inevitably higher than with helical-gear arrangements.

Of the numerous factors influencing the total loading of a worm-gear unit, the most important include:

- Mean torque (rated torque)
- Daily operating hours
- Severity of torque peaks (shock classification)
- Frequency of torque peaks (switching duty)
- Ambient temperature

These factors can be represented in a simplified and practical manner by **service factors**. The tables and explanations below attempt to provide an objective description of the **shock classification**, rather than a classification of the driven machinery. Experience has shown that, in addition to the torque shocks caused by the driven machinery (M_x/M_N), above all the power transmission components (clutches, chains etc.) plus the mass ratios play a decisive role in this.

See Bauer special imprint SD32 for more information.

Continuous operation without switching frequency Z ≤1/h

Factor f_1 for shock classification and operating time

Shock classification	Operating hours per day t_d ≤10 min	≤1 h	>1 h	>4 h	>8 h	>16 h
			≤4 h	≤8 h	≤16 h	≤24 h
I	0,7	0,8	0,9	1,0	1,25	1,4
II	0,9	1,0	1,12	1,25	1,6	1,8
III	1,25	1,4	1,6	1,8	2,2	2,5

Switching duty

Factor f_2 or shock classification and switching frequency

Switching frequency in single- shift operation $t_d \leq 8$ h/d

Shock classification	1 <Z ≤100	100 <Z ≤1000	1000 <Z
I	1,25	1,4	1,6
II	1,6	1,8	2,0
III	1,8	2,0	2,2

Switching frequency in multiple- shift operation $t_d > 8$ h/d

Shock classification	1 <Z ≤100	100 <Z ≤1000	1000 <Z
I	1,4	1,6	1,8
II	1,8	2,0	2,2
III	2,0	2,2	2,5

Ambient temperature

Factor f_3 for increased ambient temperature

AT	-10°C .. +25°C	>25°C	>30°C	>35°C	>40°C	>45°C	>50°C	>55°C
	no Factor	1,1	1,2	1,3	1,4	1,5	1,6	Enquiry

Bauer service factor

Bauer service factor f_B = maximum value f_1, f_2, f_3 (at daily operating hours > 1h)

For example: Shock classification II for Z = 100 switching operations per hour and multiple-shift operation yields a service factor $f_B = f_2 = 1,8$

Explanation of shock classification

Shock classification I:
Uniform without shock loads. All the following requirements must be satisfied:
- FI ≤1,3
- $M_x/M_N \leq 1,0$
- Shock-absorbing power transmission components (e.g. highly resilient, zero-play coupling, φ N ≥5°)

Shock classification II:
Moderate shock loads. At least one of the following conditions applies:
- 1,3 <FI ≤2
- $1 \leq M_x/M_N \leq 1,4$
- Shock-neutral power transmission components (e.g. gear wheels, zero- playrigid coupling or resilient coupling with φ N <5 °)

Shock classification III:
Heavy shock loads. At least one of the following conditions applies:
- FI >2
- $1,4 < M_x/M_N \leq 2,0$
- Shock-amplifying power transmission components (e.g. coupling with play or chain drive)

Key to abbreviations

Z	Switching duty number of switching operations per hour
t_d	Daily operating time in hours (h/d)
FI	Factor of inertia FI = $(J_{ext} + J_{rot})/J_{rot}$
J_{ext}	Mass moment of inertia of the machine to be driven, in relation to the motor's rotor shaft (kgm^2)
J_{rot}	Mass moment of inertia of the motor rotor (kgm^2)
M_x	Highest impact torque above the static torque which can occur during normal operation or in emergency situations
M_N	Required static load torque for the application
M_x/M_N	Relative torque - Factor
φ_N	Torsional offset of the resilient coupling under rated torque
UT	Ambient temperature (°C)

Selection tables, worm-geared motors

Key to abbreviations

P	Rated output
n_2	Rated speed of the output shaft
i	Gear reduction ratio
M_2	Rated torque at the output shaft
f_B	Bauer Service factor
F_{RN}	Maximum permissible radial force with standard solid shaft (Code -.1 und -.2)

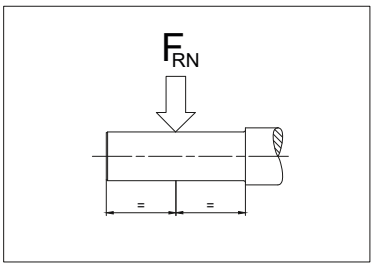

Use the selection tables to determine the size of geared motor required. The codes clearly define the Type of gear unit and output shaft (see chapter 13 “dimensional drawings worm-geared motors”).

Motor power overload protection

Motor-power ratings, particularly in conjunction with four-stage and multi-stage gear units, are more than ample in some instances. Consequently, and in much the same way as with low-power motors, rated current is not a measure of gear loading and cannot be used to protect the gear unit against overloading. It is advisable to provide gears at risk from excessive load or blockage with a protective mechanism (e. g., slip clutch, slip hub, shear pin or an alternative).

0.03 kW

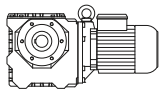

P_N	50 Hz			i	Type	m		
	n_2	M_2	f_B					
[kW]	[1/min]	[Nm]	[—]	[:1]		[kg]	[N]	[N]
0.03	75	2.8	8.9	18.00	**BS02-../D04LA4**	3.5	1250	-
0.03	62	3.2	7.8	22.00	**BS02-../D04LA4**	3.5	1250	-
0.03	50	3.6	6.9	27.00	**BS02-../D04LA4**	3.5	1250	-
0.03	41	4.15	6.0	33.00	**BS02-../D04LA4**	3.5	1250	-
0.03	31.5	5.6	4.3	43.00	**BS02-../D04LA4**	3.5	1250	-
0.03	25	6.5	3.4	54.00	**BS02-../D04LA4**	3.5	1250	-
0.03	19.5	7.4	2.7	70.00	**BS02-../D04LA4**	3.5	1250	-
0.03	14.5	11.6	3.3	93.92	**BS04-../D04LA4**	3.9	2250	-
0.03	13.5	13.5	2.8	102.9	**BS04-../D04LA4**	3.9	2250	-
0.03	12	13.6	2.8	117.0	**BS04-../D04LA4**	3.9	2250	-
0.03	11	16.4	2.5	123.0	**BS04-../D04LA4**	3.9	2250	-
0.03	9.8	18.1	2.3	138.4	**BS04-../D04LA4**	3.9	2250	-
0.03	9.0	17.5	2.2	150.3	**BS04-../D04LA4**	3.9	2250	-
0.03	8.5	20.5	1.8	160.1	**BS04-../D04LA4**	3.9	2250	-
0.03	7.8	19.8	2.0	174.0	**BS04-../D04LA4**	3.9	2250	-
0.03	6.2	24	1.65	220.0	**BS04-../D04LA4**	3.9	2250	-
0.03	5.4	27.5	1.5	251.6	**BS04-../D04LA4**	3.9	2250	-
0.03	4.5	32	1.35	300.7	**BS04-../D04LA4**	3.9	2250	-
0.03	4.0	35.5	1.25	338.3	**BS04-../D04LA4**	3.9	2250	-
0.03	3.5	40	1.15	391.3	**BS04-../D04LA4**	3.9	2250	-
0.03	3.6	56	1.7	381.5	**BS06G04-../D04LA4**	11	3500	-
0.03	2.9	70	1.35	474.8	**BS06G04-../D04LA4**	11	3500	-
0.03	2.5	79	1.25	552.6	**BS06G04-../D04LA4**	11	3500	-
0.03	2.3	88	1.05	610.7	**BS06G04-../D04LA4**	11	3500	-
0.03	2.0	101	0.93	704.7	**BS06G04-../D04LA4**	11	3500	-
0.03	1.6	94*	1.0	847.0	**BS06G04-../D04LA4**	11	3500	-
0.03	1.5	94*	1.0	939.6	**BS06G04-../D04LA4**	11	3500	-
0.03	1.2	94*	1.0	1170	**BS06G04-../D04LA4**	11	3500	-
0.03	0.9	94*	1.0	1503	**BS06G04-../D04LA4**	11	3500	-
0.03	0.85	94*	1.0	1654	**BS06G04-../D04LA4**	11	3500	-
0.03	0.75	94*	1.0	1914	**BS06G04-../D04LA4**	11	3500	-
0.03	0.65	94*	1.0	2200	**BS06G04-../D04LA4**	11	3500	-
0.03	0.49	94*	1.0	2768	**BS06G04-../D04LA4**	11	3500	-
0.03	0.45	94*	1.0	3007	**BS06G04-../D04LA4**	11	3500	-
0.03	0.41	94*	1.0	3308	**BS06G04-../D04LA4**	11	3500	-
0.03	0.37	94*	1.0	3721	**BS06G04-../D04LA4**	11	3500	-
0.03	0.32	94*	1.0	4304	**BS06G04-../D04LA4**	11	3500	-
0.03	0.28	98*	1.0	4947	**BS06G04-../D04LA4**	11	3500	-
0.03	0.25	98*	1.0	5442	**BS06G04-../D04LA4**	11	3500	-
0.03	0.22	100*	1.0	6234	**BS06G04-../D04LA4**	11	3500	-
0.03	5.4	30.5	3.2	252.0	**BS06-../D04LA4**	8.4	3500	-
0.03	4.3	37.5	2.8	315.3	**BS06-../D04LA4**	8.4	3500	-
0.03	3.8	42	2.6	358.9	**BS06-../D04LA4**	8.4	3500	-
0.03	3.3	47.5	2.3	418.0	**BS06-../D04LA4**	8.4	3500	-
0.03	2.5	67	2.8	544.8	**BS10Z-../D04LA4**	21	6000	-
0.03	2.2	72	2.6	638.7	**BS10Z-../D04LA4**	21	6000	-
0.03	1.8	85	2.1	788.7	**BS10Z-../D04LA4**	21	6000	-
0.03	1.5	101	1.55	905.6	**BS10Z-../D04LA4**	21	6000	-
0.03	1.4	130	1.25	969.9	**BS10G06-../D04LA4**	25	6000	-
0.03	1.2	152	1.05	1166	**BS10G06-../D04LA4**	25	6000	-
0.03	1.1	166	0.96	1342	**BS10G06-../D04LA4**	25	6000	-
0.03	0.9	160*	1.0	1528	**BS10G06-../D04LA4**	25	6000	-
0.03	0.85	160*	1.0	1668	**BS10G06-../D04LA4**	25	6000	-
0.03	0.7	160*	1.0	1963	**BS10G06-../D04LA4**	25	6000	-
0.03	0.6	160*	1.0	2348	**BS10G06-../D04LA4**	25	6000	-
0.03	0.55	160*	1.0	2635	**BS10G06-../D04LA4**	25	6000	-
0.03	0.47	160*	1.0	2875	**BS10G06-../D04LA4**	25	6000	-
0.03	0.41	160*	1.0	3332	**BS10G06-../D04LA4**	25	6000	-
0.03	0.38	160*	1.0	3635	**BS10G06-../D04LA4**	25	6000	-
0.03	0.33	160*	1.0	4163	**BS10G06-../D04LA4**	25	6000	-
0.03	0.29	160*	1.0	4776	**BS10G06-../D04LA4**	25	6000	-
0.03	0.26	160*	1.0	5209	**BS10G06-../D04LA4**	25	6000	-
0.03	0.23	164*	1.0	6019	**BS10G06-../D04LA4**	25	6000	-
0.03	0.21	164*	1.0	6565	**BS10G06-../D04LA4**	25	6000	-
0.03	0.19	164*	1.0	7471	**BS10G06-../D04LA4**	25	6000	-

The torques marked (*) are maximum permissible torques for service factor f_B=1.0.

0.03 kW

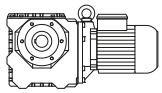

P_N	50 Hz			i	Type	m		
	n_2	M_2	f_B					
[kW]	[1/min]	[Nm]	[—]	[:1]		[kg]	[N]	[N]
0.03	0.16	164*	1.0	8703	**BS10G06-../D04LA4**	25	6000	-
0.03	1.7	111	2.4	831.7	**BS20G06-../D04LA4**	35	8000	-
0.03	1.4	135	2.0	1000	**BS20G06-../D04LA4**	35	8000	-
0.03	1.1	171	1.6	1311	**BS20G06-../D04LA4**	35	8000	-
0.03	0.9	210	1.3	1543	**BS20G06-../D04LA4**	35	8000	-
0.03	0.85	220	1.25	1683	**BS20G06-../D04LA4**	35	8000	-
0.03	0.7	270*	1.0	2014	**BS20G06-../D04LA4**	35	8000	-
0.03	0.55	270*	1.0	2465	**BS20G06-../D04LA4**	35	8000	-
0.03	0.48	270*	1.0	2857	**BS20G06-../D04LA4**	35	8000	-
0.03	0.44	270*	1.0	3117	**BS20G06-../D04LA4**	35	8000	-
0.03	0.38	270*	1.0	3570	**BS20G06-../D04LA4**	35	8000	-
0.03	0.33	270*	1.0	4096	**BS20G06-../D04LA4**	35	8000	-
0.03	0.28	270*	1.0	4910	**BS20G06-../D04LA4**	35	8000	-
0.03	0.23	270*	1.0	5880	**BS20G06-../D04LA4**	35	8000	-
0.03	0.19	275*	1.0	7363	**BS20G06-../D04LA4**	35	8000	-
0.03	0.17	275*	1.0	8031	**BS20G06-../D04LA4**	35	8000	-
0.03	0.15	280*	1.0	9220	**BS20G06-../D04LA4**	35	8000	-
0.03	1.2	164	3.0	1176	**BS30G06-../D04LA4**	53	10000	-
0.03	0.95	205	2.4	1461	**BS30G06-../D04LA4**	53	10000	-
0.03	0.9	215	2.3	1576	**BS30G06-../D04LA4**	53	10000	-
0.03	0.75	260	1.9	1886	**BS30G06-../D04LA4**	53	10000	-
0.03	0.6	325	1.5	2308	**BS30G06-../D04LA4**	53	10000	-
0.03	0.55	355	1.4	2518	**BS30G06-../D04LA4**	53	10000	-
0.03	0.47	420	1.15	2919	**BS30G06-../D04LA4**	53	10000	-
0.03	0.41	480	1.0	3344	**BS30G06-../D04LA4**	53	10000	-
0.03	0.38	490*	1.0	3647	**BS30G06-../D04LA4**	53	10000	-
0.03	0.33	490*	1.0	4184	**BS30G06-../D04LA4**	53	10000	-
0.03	0.28	510*	1.0	4905	**BS30G06-../D04LA4**	53	10000	-
0.03	0.24	520*	1.0	5783	**BS30G06-../D04LA4**	53	10000	-
0.03	0.22	520*	1.0	6308	**BS30G06-../D04LA4**	53	10000	-
0.03	0.19	520*	1.0	7179	**BS30G06-../D04LA4**	53	10000	-
0.03	0.17	520*	1.0	8362	**BS30G06-../D04LA4**	53	10000	-

0.04 kW

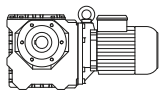

P_N	50 Hz			i	Type	m		
	n_2	M_2	f_B					
[kW]	[1/min]	[Nm]	[—]	[:1]		[kg]	[N]	[N]
0.04	127	2.45	10	10.67	**BS02-../D04LA4**	3.5	1250	-
0.04	100	2.95	8.5	13.50	**BS02-../D04LA4**	3.5	1250	-
0.04	75	3.75	6.7	18.00	**BS02-../D04LA4**	3.5	1250	-
0.04	62	4.3	5.8	22.00	**BS02-../D04LA4**	3.5	1250	-
0.04	50	4.8	5.2	27.00	**BS02-../D04LA4**	3.5	1250	-
0.04	41	5.5	4.5	33.00	**BS02-../D04LA4**	3.5	1250	-
0.04	31.5	7.5	3.2	43.00	**BS02-../D04LA4**	3.5	1250	-
0.04	25	8.7	2.5	54.00	**BS02-../D04LA4**	3.5	1250	-
0.04	19.5	9.9	2.0	70.00	**BS02-../D04LA4**	3.5	1250	-
0.04	21.5	11.1	3.2	64.06	**BS04-../D04LA4**	3.9	2250	-
0.04	19	13.2	2.9	71.18	**BS04-../D04LA4**	3.9	2250	-
0.04	18	12.9	2.9	77.00	**BS04-../D04LA4**	3.9	2250	-
0.04	14.5	15.5	2.5	93.92	**BS04-../D04LA4**	3.9	2250	-
0.04	13.5	18.1	2.1	102.9	**BS04-../D04LA4**	3.9	2250	-
0.04	12	18.1	2.1	117.0	**BS04-../D04LA4**	3.9	2250	-
0.04	11	21.5	1.9	123.0	**BS04-../D04LA4**	3.9	2250	-
0.04	9.8	24	1.75	138.4	**BS04-../D04LA4**	3.9	2250	-
0.04	9.0	23	1.7	150.3	**BS04-../D04LA4**	3.9	2250	-
0.04	8.5	27	1.35	160.1	**BS04-../D04LA4**	3.9	2250	-
0.04	7.8	26	1.55	174.0	**BS04-../D04LA4**	3.9	2250	-
0.04	6.2	32.5	1.25	220.0	**BS04-../D04LA4**	3.9	2250	-
0.04	5.4	36.5	1.1	251.6	**BS04-../D04LA4**	3.9	2250	-
0.04	4.5	43	1.0	300.7	**BS04-../D04LA4**	3.9	2250	-
0.04	4.0	47.5	0.93	338.3	**BS04-../D04LA4**	3.9	2250	-
0.04	3.5	53	0.85	391.3	**BS04-../D04LA4**	3.9	2250	-

The torques marked (*) are maximum permissible torques for service factor f_B=1.0.

0.04 kW

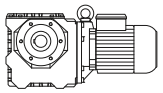

P_N	50 Hz			i	Type	m		
	n_2	M_2	f_B					
[kW]	[1/min]	[Nm]	[—]	[:1]		[kg]	[N]	[N]
0.04	3.6	75	1.25	381.5	**BS06G04-../D04LA4**	11	3500	-
0.04	2.9	93	1.0	474.8	**BS06G04-../D04LA4**	11	3500	-
0.04	2.5	105	0.95	552.6	**BS06G04-../D04LA4**	11	3500	-
0.04	2.3	117	0.8	610.7	**BS06G04-../D04LA4**	11	3500	-
0.04	7.9	30.5	2.9	171.0	**BS06-../D04LA4**	8.4	3500	-
0.04	6.2	36	2.7	220.0	**BS06-../D04LA4**	8.4	3500	-
0.04	5.4	41	2.4	252.0	**BS06-../D04LA4**	8.4	3500	-
0.04	4.3	50	2.1	315.3	**BS06-../D04LA4**	8.4	3500	-
0.04	3.8	56	1.95	358.9	**BS06-../D04LA4**	8.4	3500	-
0.04	3.3	63	1.75	418.0	**BS06-../D04LA4**	8.4	3500	-
0.04	3.8	62	3.1	360.3	**BS10Z-../D04LA4**	21	6000	-
0.04	3.2	72	2.6	432.4	**BS10Z-../D04LA4**	21	6000	-
0.04	2.5	90	2.1	544.8	**BS10Z-../D04LA4**	21	6000	-
0.04	2.2	97	1.95	638.7	**BS10Z-../D04LA4**	21	6000	-
0.04	1.8	114	1.6	788.7	**BS10Z-../D04LA4**	21	6000	-
0.04	1.5	134	1.2	905.6	**BS10Z-../D04LA4**	21	6000	-
0.04	1.4	174	0.92	969.9	**BS10G06-../D04LA4**	25	6000	-
0.04	1.2	200	0.8	1166	**BS10G06-../D04LA4**	25	6000	-
0.04	1.8	114	2.7	763.4	**BS20Z-../D04LA4**	32	8000	-
0.04	1.7	148	1.8	831.7	**BS20G06-../D04LA4**	35	8000	-
0.04	1.4	180	1.5	1000	**BS20G06-../D04LA4**	35	8000	-
0.04	1.1	225	1.2	1311	**BS20G06-../D04LA4**	35	8000	-
0.04	1.4	188	2.6	1022	**BS30G06-../D04LA4**	53	10000	-
0.04	1.2	215	2.3	1176	**BS30G06-../D04LA4**	53	10000	-
0.04	0.95	275	1.8	1461	**BS30G06-../D04LA4**	53	10000	-
0.04	0.9	290	1.7	1576	**BS30G06-../D04LA4**	53	10000	-
0.04	0.75	350	1.4	1886	**BS30G06-../D04LA4**	53	10000	-
0.04	0.6	435	1.15	2308	**BS30G06-../D04LA4**	53	10000	-
0.04	0.55	475	1.05	2518	**BS30G06-../D04LA4**	53	10000	-

0.06 kW

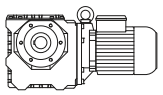

P_N	50 Hz			i	Type	m		
	n_2	M_2	f_B					
[kW]	[1/min]	[Nm]	[—]	[:1]		[kg]	[N]	[N]
0.06	295	1.7	8.8	4.60	**BS02-../D04LA4**	3.5	1000	-
0.06	250	2.0	10	5.40	**BS02-../D04LA4**	3.5	1000	-
0.06	200	2.45	10	6.75	**BS02-../D04LA4**	3.5	1000	-
0.06	164	2.9	8.6	8.25	**BS02-../D04LA4**	3.5	1100	-
0.06	127	3.65	6.8	10.67	**BS02-../D04LA4**	3.5	1250	-
0.06	100	4.45	5.6	13.50	**BS02-../D04LA4**	3.5	1250	-
0.06	75	5.6	4.5	18.00	**BS02-../D04LA4**	3.5	1250	-
0.06	62	6.4	3.9	22.00	**BS02-../D04LA4**	3.5	1250	-
0.06	50	7.2	3.5	27.00	**BS02-../D04LA4**	3.5	1250	-
0.06	41	8.3	3.0	33.00	**BS02-../D04LA4**	3.5	1250	-
0.06	31.5	11.2	2.1	43.00	**BS02-../D04LA4**	3.5	1250	-
0.06	25	13	1.7	54.00	**BS02-../D04LA4**	3.5	1250	-
0.06	19.5	14.9	1.35	70.00	**BS02-../D04LA4**	3.5	1250	-
0.06	18	16.2	2.5	75.00	**BS03-../D05LA4**	5.4	1950	-
0.06	35.5	11.1	3.3	38.42	**BS04-../D04LA4**	3.9	2250	-
0.06	28.5	13.6	2.8	47.86	**BS04-../D04LA4**	3.9	2250	-
0.06	21.5	16.7	2.2	64.06	**BS04-../D04LA4**	3.9	2250	-
0.06	19	19.9	1.9	71.18	**BS04-../D04LA4**	3.9	2250	-
0.06	18	19.4	1.95	77.00	**BS04-../D04LA4**	3.9	2250	-
0.06	14.5	23	1.65	93.92	**BS04-../D04LA4**	3.9	2250	-
0.06	13.5	27	1.4	102.9	**BS04-../D04LA4**	3.9	2250	-
0.06	12	27	1.4	117.0	**BS04-../D04LA4**	3.9	2250	-
0.06	11	32.5	1.25	123.0	**BS04-../D04LA4**	3.9	2250	-
0.06	9.8	36	1.15	138.4	**BS04-../D04LA4**	3.9	2250	-
0.06	9.0	35	1.1	150.3	**BS04-../D04LA4**	3.9	2250	-

The torques marked (*) are maximum permissible torques for service factor f_B=1.0.

0.06 kW

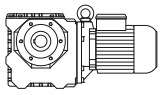

P_N	50 Hz			i	Type	m		
	n_2	M_2	f_B					
[kW]	[1/min]	[Nm]	[—]	[:1]		[kg]	[N]	[N]
0.06	8.5	41	0.9	160.1	**BS04-../D04LA4**	3.9	2250	-
0.06	7.8	39.5	1.0	174.0	**BS04-../D04LA4**	3.9	2250	-
0.06	6.2	48.5	0.82	220.0	**BS04-../D04LA4**	3.9	2250	-
0.06	3.6	113	0.83	381.5	**BS06G04-../D04LA4**	11	3500	-
0.06	11.5	32	2.9	118.8	**BS06-../D04LA4**	8.4	3500	-
0.06	10.5	36.5	2.8	129.0	**BS06-../D04LA4**	8.4	3500	-
0.06	9.2	40	2.7	146.8	**BS06-../D04LA4**	8.4	3500	-
0.06	7.8	44	2.2	174.0	**BS06-../D04LA4**	8.4	3500	-
0.06	6.2	54	1.8	220.0	**BS06-../D04LA4**	8.4	3500	-
0.06	5.4	61	1.6	252.0	**BS06-../D04LA4**	8.4	3500	-
0.06	4.3	75	1.4	315.3	**BS06-../D04LA4**	8.4	3500	-
0.06	3.8	84	1.3	358.9	**BS06-../D04LA4**	8.4	3500	-
0.06	3.3	95	1.15	418.0	**BS06-../D04LA4**	8.4	3500	-
0.06	11.5	36.5	3.3	119.6	**BS10-../D06LA4**	23	6000	-
0.06	6.3	58	3.1	216.6	**BS10-../D06LA4**	23	6000	-
0.06	5.4	67	2.7	254.0	**BS10Z-../D06LA4**	24	6000	-
0.06	4.5	78	2.4	302.5	**BS10Z-../D06LA4**	24	6000	-
0.06	3.8	93	2.0	360.3	**BS10Z-../D06LA4**	24	6000	-
0.06	3.2	109	1.75	432.4	**BS10Z-../D06LA4**	24	6000	-
0.06	2.5	135	1.4	544.8	**BS10Z-../D06LA4**	24	6000	-
0.06	2.2	145	1.3	638.7	**BS10Z-../D06LA4**	24	6000	-
0.06	1.8	171	1.05	788.7	**BS10Z-../D06LA4**	24	6000	-
0.06	3.2	109	3.0	430.8	**BS20Z-../D06LA4**	35	8000	-
0.06	2.6	121	3.0	539.7	**BS20Z-../D06LA4**	35	8000	-
0.06	2.2	140	2.4	619.2	**BS20Z-../D06LA4**	35	8000	-
0.06	1.8	171	1.8	763.4	**BS20Z-../D06LA4**	35	8000	-
0.06	1.7	220	1.25	831.7	**BS20G06-../D06LA4**	38	8000	-
0.06	1.4	270	1.0	1000	**BS20G06-../D06LA4**	38	8000	-
0.06	1.7	195	2.4	804.1	**BS30Z-../D06LA4**	54	10000	-
0.06	1.5	215	2.1	932.0	**BS30Z-../D06LA4**	54	10000	-
0.06	1.4	280	1.75	1022	**BS30G06-../D06LA4**	56	10000	-
0.06	1.2	325	1.5	1176	**BS30G06-../D06LA4**	56	10000	-
0.06	0.95	415	1.2	1461	**BS30G06-../D06LA4**	56	10000	-
0.06	0.9	435	1.15	1576	**BS30G06-../D06LA4**	56	10000	-
0.06	1.5	225	3.3	908.2	**BS40Z-../D06LA4**	68	15000	-
0.06	1.4	285	3.1	965.5	**BS40G10-../D06LA4**	73	15000	-
0.06	1.2	330	2.7	1180	**BS40G10-../D06LA4**	73	15000	-
0.06	0.95	420	2.1	1499	**BS40G10-../D06LA4**	73	15000	-
0.06	0.8	500	1.75	1785	**BS40G10-../D06LA4**	73	15000	-
0.06	0.65	610	1.45	2126	**BS40G10-../D06LA4**	73	15000	-
0.06	0.6	660	1.35	2304	**BS40G10-../D06LA4**	73	15000	-
0.06	0.55	720	1.2	2552	**BS40G10-../D06LA4**	73	15000	-
0.06	0.47	850	1.05	2902	**BS40G10-../D06LA4**	73	15000	-

0.09 kW

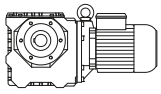

P_N	50 Hz			i	Type	m		
	n_2	M_2	f_B					
[kW]	[1/min]	[Nm]	[—]	[:1]		[kg]	[N]	[N]
0.09	295	2.55	5.9	4.60	**BS02-../D04LA4**	3.5	1000	-
0.09	250	3.0	6.7	5.40	**BS02-../D04LA4**	3.5	1000	-
0.09	200	3.65	6.8	6.75	**BS02-../D04LA4**	3.5	1000	-
0.09	164	4.4	5.7	8.25	**BS02-../D04LA4**	3.5	1100	-
0.09	127	5.5	4.5	10.67	**BS02-../D04LA4**	3.5	1250	-
0.09	100	6.7	3.7	13.50	**BS02-../D04LA4**	3.5	1250	-
0.09	75	8.4	3.0	18.00	**BS02-../D04LA4**	3.5	1250	-
0.09	62	9.7	2.6	22.00	**BS02-../D04LA4**	3.5	1250	-
0.09	50	10.8	2.3	27.00	**BS02-../D04LA4**	3.5	1250	-
0.09	41	12.5	2.0	33.00	**BS02-../D04LA4**	3.5	1250	-
0.09	31.5	16.9	1.4	43.00	**BS02-../D04LA4**	3.5	1250	-

The torques marked (*) are maximum permissible torques for service factor f_B=1.0.

0.09 kW

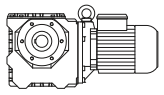

P_N	50 Hz			i	Type	m		
	n_2	M_2	f_B					
[kW]	[1/min]	[Nm]	[—]	[:1]		[kg]	[N]	[N]
0.09	25	19.5	1.15	54.00	**BS02-../D04LA4**	3.5	1250	-
0.09	19.5	22	0.91	70.00	**BS02-../D04LA4**	3.5	1250	-
0.09	27	18.4	3.0	50.00	**BS03-../D05LA4**	5.4	1950	-
0.09	22	20.5	2.3	62.00	**BS03-../D05LA4**	5.4	1950	-
0.09	18	24	1.65	75.00	**BS03-../D05LA4**	5.4	1950	-
0.09	56	11.6	2.9	24.25	**BS04-../D04LA4**	3.9	2250	-
0.09	52	11.7	3.2	26.21	**BS04-../D04LA4**	3.9	2250	-
0.09	43	13.9	2.7	31.50	**BS04-../D04LA4**	3.9	2250	-
0.09	35.5	16.7	2.2	38.42	**BS04-../D04LA4**	3.9	2250	-
0.09	28.5	20.5	1.85	47.86	**BS04-../D04LA4**	3.9	2250	-
0.09	21.5	25	1.45	64.06	**BS04-../D04LA4**	3.9	2250	-
0.09	19	29.5	1.3	71.18	**BS04-../D04LA4**	3.9	2250	-
0.09	18	29	1.3	77.00	**BS04-../D04LA4**	3.9	2250	-
0.09	14.5	34.5	1.1	93.92	**BS04-../D04LA4**	3.9	2250	-
0.09	13.5	40.5	0.94	102.9	**BS04-../D04LA4**	3.9	2250	-
0.09	12	40.5	0.94	117.0	**BS04-../D04LA4**	3.9	2250	-
0.09	11	49	0.84	123.0	**BS04-../D04LA4**	3.9	2250	-
0.09	21.5	27	3.0	64.06	**BS06-../D04LA4**	8.4	3500	-
0.09	19	32	2.9	71.18	**BS06-../D04LA4**	8.4	3500	-
0.09	18	31.5	2.7	77.00	**BS06-../D04LA4**	8.4	3500	-
0.09	15	40	2.5	90.00	**BS06-../D04LA4**	8.4	3500	-
0.09	13.5	43.5	2.3	103.1	**BS06-../D04LA4**	8.4	3500	-
0.09	11.5	48.5	1.95	118.8	**BS06-../D04LA4**	8.4	3500	-
0.09	10.5	54	1.95	129.0	**BS06-../D04LA4**	8.4	3500	-
0.09	9.2	60	1.75	146.8	**BS06-../D04LA4**	8.4	3500	-
0.09	7.8	66	1.5	174.0	**BS06-../D04LA4**	8.4	3500	-
0.09	6.2	81	1.2	220.0	**BS06-../D04LA4**	8.4	3500	-
0.09	5.4	92	1.1	252.0	**BS06-../D04LA4**	8.4	3500	-
0.09	4.3	113	0.94	315.3	**BS06-../D04LA4**	8.4	3500	-
0.09	3.8	126	0.87	358.9	**BS06-../D04LA4**	8.4	3500	-
0.09	11.5	55	2.2	119.6	**BS10-../D06LA4**	23	6000	-
0.09	10.5	52	3.2	130.3	**BS10-../D06LA4**	23	6000	-
0.09	8.9	61	2.7	152.7	**BS10-../D06LA4**	23	6000	-
0.09	7.2	76	2.2	188.6	**BS10-../D06LA4**	23	6000	-
0.09	6.3	87	2.1	216.6	**BS10-../D06LA4**	23	6000	-
0.09	5.4	101	1.8	254.0	**BS10Z-../D06LA4**	24	6000	-
0.09	4.5	118	1.6	302.5	**BS10Z-../D06LA4**	24	6000	-
0.09	3.8	140	1.35	360.3	**BS10Z-../D06LA4**	24	6000	-
0.09	3.2	163	1.15	432.4	**BS10Z-../D06LA4**	24	6000	-
0.09	2.5	200	0.95	544.8	**BS10Z-../D06LA4**	24	6000	-
0.09	2.2	215	0.88	638.7	**BS10Z-../D06LA4**	24	6000	-
0.09	6.0	91	3.2	225.6	**BS20-../D06LA4**	34	8000	-
0.09	5.3	103	2.9	257.8	**BS20Z-../D06LA4**	35	8000	-
0.09	4.5	120	2.5	300.1	**BS20Z-../D06LA4**	35	8000	-
0.09	3.8	140	2.3	359.9	**BS20Z-../D06LA4**	35	8000	-
0.09	3.2	163	2.0	430.8	**BS20Z-../D06LA4**	35	8000	-
0.09	2.6	181	2.0	539.7	**BS20Z-../D06LA4**	35	8000	-
0.09	2.2	210	1.55	619.2	**BS20Z-../D06LA4**	35	8000	-
0.09	1.8	255	1.2	763.4	**BS20Z-../D06LA4**	35	8000	-
0.09	1.7	330	0.82	831.7	**BS20G06-../D06LA4**	38	8000	-
0.09	3.8	167	2.4	359.6	**BS30Z-../D06LA4**	54	10000	-
0.09	3.0	183	3.3	457.3	**BS30Z-../D06LA4**	54	10000	-
0.09	2.6	210	2.9	539.3	**BS30Z-../D06LA4**	54	10000	-
0.09	2.1	245	2.4	651.0	**BS30Z-../D06LA4**	54	10000	-
0.09	1.7	290	1.65	804.1	**BS30Z-../D06LA4**	54	10000	-
0.09	1.5	325	1.4	932.0	**BS30Z-../D06LA4**	54	10000	-
0.09	1.4	420	1.15	1022	**BS30G06-../D06LA4**	56	10000	-
0.09	1.2	490	1.0	1176	**BS30G06-../D06LA4**	56	10000	-
0.09	1.9	270	2.8	736.5	**BS40Z-../D06LA4**	68	15000	-
0.09	1.5	335	2.2	908.2	**BS40Z-../D06LA4**	68	15000	-
0.09	1.4	425	2.1	965.5	**BS40G10-../D06LA4**	73	15000	-
0.09	1.2	500	1.75	1180	**BS40G10-../D06LA4**	73	15000	-
0.09	0.95	630	1.4	1499	**BS40G10-../D06LA4**	73	15000	-

The torques marked (*) are maximum permissible torques for service factor f_B=1.0.

0.09 kW

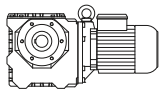

P_N	50 Hz			i	**Type**	m		
	n_2	M_2	f_B					
[kW]	[1/min]	[Nm]	[—]	[:1]		[kg]	[N]	[N]
0.09	0.8	750	1.15	1785	**BS40G10-../D06LA4**	73	15000	-

0.11 kW

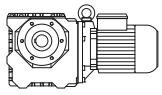

P_N	50 Hz			i	**Type**	m		
	n_2	M_2	f_B					
[kW]	[1/min]	[Nm]	[—]	[:1]		[kg]	[N]	[N]
0.11	295	3.1	4.8	4.60	**BS02-../D04LA4**	3.5	1000	-
0.11	250	3.65	5.5	5.40	**BS02-../D04LA4**	3.5	1000	-
0.11	200	4.5	5.6	6.75	**BS02-../D04LA4**	3.5	1000	-
0.11	164	5.3	4.7	8.25	**BS02-../D04LA4**	3.5	1100	-
0.11	127	6.7	3.7	10.67	**BS02-../D04LA4**	3.5	1250	-
0.11	100	8.1	3.1	13.50	**BS02-../D04LA4**	3.5	1250	-
0.11	75	10.3	2.4	18.00	**BS02-../D04LA4**	3.5	1250	-
0.11	62	11.8	2.1	22.00	**BS02-../D04LA4**	3.5	1250	-
0.11	50	13.2	1.9	27.00	**BS02-../D04LA4**	3.5	1250	-
0.11	41	15.3	1.65	33.00	**BS02-../D04LA4**	3.5	1250	-
0.11	31.5	20.5	1.15	43.00	**BS02-../D04LA4**	3.5	1250	-
0.11	25	23.5	0.94	54.00	**BS02-../D04LA4**	3.5	1250	-
0.11	65	12.2	3.0	20.96	**BS04-../D04LA4**	3.9	2100	-
0.11	56	14.2	2.4	24.25	**BS04-../D04LA4**	3.9	2250	-
0.11	52	14.3	2.7	26.21	**BS04-../D04LA4**	3.9	2250	-
0.11	43	17.1	2.2	31.50	**BS04-../D04LA4**	3.9	2250	-
0.11	35.5	20	1.85	38.42	**BS04-../D04LA4**	3.9	2250	-
0.11	28.5	25	1.5	47.86	**BS04-../D04LA4**	3.9	2250	-
0.11	21.5	30.5	1.2	64.06	**BS04-../D04LA4**	3.9	2250	-
0.11	19	36	1.05	71.18	**BS04-../D04LA4**	3.9	2250	-
0.11	18	35.5	1.05	77.00	**BS04-../D04LA4**	3.9	2250	-
0.11	14.5	42.5	0.89	93.92	**BS04-../D04LA4**	3.9	2250	-
0.11	3.6	94*	1.0	381.5	**BS06G04-../D04LA4**	11	3500	-
0.11	2.9	94*	1.0	474.8	**BS06G04-../D04LA4**	11	3500	-
0.11	2.5	100*	1.0	552.6	**BS06G04-../D04LA4**	11	3500	-
0.11	2.3	94*	1.0	610.7	**BS06G04-../D04LA4**	11	3500	-
0.11	2.0	94*	1.0	704.7	**BS06G04-../D04LA4**	11	3500	-
0.11	1.6	94*	1.0	847.0	**BS06G04-../D04LA4**	11	3500	-
0.11	1.5	94*	1.0	939.6	**BS06G04-../D04LA4**	11	3500	-
0.11	1.2	94*	1.0	1170	**BS06G04-../D04LA4**	11	3500	-
0.11	0.9	94*	1.0	1503	**BS06G04-../D04LA4**	11	3500	-
0.11	0.85	94*	1.0	1654	**BS06G04-../D04LA4**	11	3500	-
0.11	0.75	94*	1.0	1914	**BS06G04-../D04LA4**	11	3500	-
0.11	0.65	94*	1.0	2200	**BS06G04-../D04LA4**	11	3500	-
0.11	0.49	94*	1.0	2768	**BS06G04-../D04LA4**	11	3500	-
0.11	0.45	94*	1.0	3007	**BS06G04-../D04LA4**	11	3500	-
0.11	0.41	94*	1.0	3308	**BS06G04-../D04LA4**	11	3500	-
0.11	0.37	94*	1.0	3721	**BS06G04-../D04LA4**	11	3500	-
0.11	0.32	94*	1.0	4304	**BS06G04-../D04LA4**	11	3500	-
0.11	0.28	98*	1.0	4947	**BS06G04-../D04LA4**	11	3500	-
0.11	0.25	98*	1.0	5442	**BS06G04-../D04LA4**	11	3500	-
0.11	0.22	100*	1.0	6234	**BS06G04-../D04LA4**	11	3500	-
0.11	28	27	3.3	48.60	**BS06-../D04LA4**	8.4	3500	-
0.11	23.5	31.5	2.9	58.15	**BS06-../D04LA4**	8.4	3500	-
0.11	21.5	33	2.4	64.06	**BS06-../D04LA4**	8.4	3500	-
0.11	19	39	2.4	71.18	**BS06-../D04LA4**	8.4	3500	-
0.11	18	39	2.2	77.00	**BS06-../D04LA4**	8.4	3500	-
0.11	15	49	2.0	90.00	**BS06-../D04LA4**	8.4	3500	-
0.11	13.5	53	1.9	103.1	**BS06-../D04LA4**	8.4	3500	-
0.11	11.5	59	1.6	118.8	**BS06-../D04LA4**	8.4	3500	-
0.11	10.5	67	1.55	129.0	**BS06-../D04LA4**	8.4	3500	-
0.11	9.2	74	1.45	146.8	**BS06-../D04LA4**	8.4	3500	-
0.11	7.8	80	1.25	174.0	**BS06-../D04LA4**	8.4	3500	-
0.11	6.2	99	0.99	220.0	**BS06-../D04LA4**	8.4	3500	-
0.11	5.4	112	0.88	252.0	**BS06-../D04LA4**	8.4	3500	-

The torques marked (*) are maximum permissible torques for service factor f_B=1.0.

0.11 kW

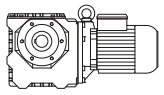

P_N	50 Hz			i	Type	m		
	n_2	M_2	f_B					
[kW]	[1/min]	[Nm]	[—]	[:1]		[kg]	[N]	[N]
0.11	6.8	98	1.5	200.0	**BS10Z-../D04LA4**	21	6000	-
0.11	5.4	124	1.45	254.0	**BS10Z-../D04LA4**	21	6000	-
0.11	4.5	144	1.3	302.5	**BS10Z-../D04LA4**	21	6000	-
0.11	3.8	171	1.1	360.3	**BS10Z-../D04LA4**	21	6000	-
0.11	3.2	200	0.95	432.4	**BS10Z-../D04LA4**	21	6000	-
0.11	1.4	160*	1.0	969.9	**BS10G06-../D04LA4**	25	6000	-
0.11	1.2	160*	1.0	1166	**BS10G06-../D04LA4**	25	6000	-
0.11	1.1	160*	1.0	1342	**BS10G06-../D04LA4**	25	6000	-
0.11	0.9	160*	1.0	1528	**BS10G06-../D04LA4**	25	6000	-
0.11	0.85	160*	1.0	1668	**BS10G06-../D04LA4**	25	6000	-
0.11	0.7	160*	1.0	1963	**BS10G06-../D04LA4**	25	6000	-
0.11	0.6	160*	1.0	2348	**BS10G06-../D04LA4**	25	6000	-
0.11	0.55	160*	1.0	2635	**BS10G06-../D04LA4**	25	6000	-
0.11	0.47	160*	1.0	2875	**BS10G06-../D04LA4**	25	6000	-
0.11	0.41	160*	1.0	3332	**BS10G06-../D04LA4**	25	6000	-
0.11	0.38	160*	1.0	3635	**BS10G06-../D04LA4**	25	6000	-
0.11	0.33	160*	1.0	4163	**BS10G06-../D04LA4**	25	6000	-
0.11	0.29	160*	1.0	4776	**BS10G06-../D04LA4**	25	6000	-
0.11	0.26	160*	1.0	5209	**BS10G06-../D04LA4**	25	6000	-
0.11	0.23	164*	1.0	6019	**BS10G06-../D04LA4**	25	6000	-
0.11	0.21	164*	1.0	6565	**BS10G06-../D04LA4**	25	6000	-
0.11	0.19	164*	1.0	7471	**BS10G06-../D04LA4**	25	6000	-
0.11	0.16	164*	1.0	8703	**BS10G06-../D04LA4**	25	6000	-
0.11	6.8	98	2.9	201.4	**BS20Z-../D04LA4**	32	8000	-
0.11	5.3	126	2.3	257.8	**BS20Z-../D04LA4**	32	8000	-
0.11	4.5	147	2.0	300.1	**BS20Z-../D04LA4**	32	8000	-
0.11	3.8	171	1.85	359.9	**BS20Z-../D04LA4**	32	8000	-
0.11	3.2	200	1.65	430.8	**BS20Z-../D04LA4**	32	8000	-
0.11	2.6	220	1.65	539.7	**BS20Z-../D04LA4**	32	8000	-
0.11	2.2	255	1.3	619.2	**BS20Z-../D04LA4**	32	8000	-
0.11	1.8	315	0.98	763.4	**BS20Z-../D04LA4**	32	8000	-
0.11	1.7	270*	1.0	831.7	**BS20G06-../D04LA4**	35	8000	-
0.11	1.4	270*	1.0	1000	**BS20G06-../D04LA4**	35	8000	-
0.11	1.1	270*	1.0	1311	**BS20G06-../D04LA4**	35	8000	-
0.11	0.9	270*	1.0	1543	**BS20G06-../D04LA4**	35	8000	-
0.11	0.85	270*	1.0	1683	**BS20G06-../D04LA4**	35	8000	-
0.11	0.7	270*	1.0	2014	**BS20G06-../D04LA4**	35	8000	-
0.11	0.55	270*	1.0	2465	**BS20G06-../D04LA4**	35	8000	-
0.11	0.48	270*	1.0	2857	**BS20G06-../D04LA4**	35	8000	-
0.11	0.44	270*	1.0	3117	**BS20G06-../D04LA4**	35	8000	-
0.11	0.38	270*	1.0	3570	**BS20G06-../D04LA4**	35	8000	-
0.11	0.33	270*	1.0	4096	**BS20G06-../D04LA4**	35	8000	-
0.11	0.28	270*	1.0	4910	**BS20G06-../D04LA4**	35	8000	-
0.11	0.23	270*	1.0	5880	**BS20G06-../D04LA4**	35	8000	-
0.11	0.19	275*	1.0	7363	**BS20G06-../D04LA4**	35	8000	-
0.11	0.17	275*	1.0	8031	**BS20G06-../D04LA4**	35	8000	-
0.11	0.15	280*	1.0	9220	**BS20G06-../D04LA4**	35	8000	-
0.11	1.4	510	0.96	1022	**BS30G06-../D04LA4**	53	10000	-
0.11	1.2	600	0.82	1176	**BS30G06-../D04LA4**	53	10000	-
0.11	0.95	490*	1.0	1461	**BS30G06-../D04LA4**	53	10000	-
0.11	0.9	490*	1.0	1576	**BS30G06-../D04LA4**	53	10000	-
0.11	0.75	490*	1.0	1886	**BS30G06-../D04LA4**	53	10000	-
0.11	0.6	490*	1.0	2308	**BS30G06-../D04LA4**	53	10000	-
0.11	0.55	490*	1.0	2518	**BS30G06-../D04LA4**	53	10000	-
0.11	0.47	490*	1.0	2919	**BS30G06-../D04LA4**	53	10000	-
0.11	0.41	490*	1.0	3344	**BS30G06-../D04LA4**	53	10000	-
0.11	0.38	490*	1.0	3647	**BS30G06-../D04LA4**	53	10000	-
0.11	0.33	490*	1.0	4184	**BS30G06-../D04LA4**	53	10000	-
0.11	0.28	510*	1.0	4905	**BS30G06-../D04LA4**	53	10000	-
0.11	0.24	520*	1.0	5783	**BS30G06-../D04LA4**	53	10000	-
0.11	0.22	520*	1.0	6308	**BS30G06-../D04LA4**	53	10000	-
0.11	0.19	520*	1.0	7179	**BS30G06-../D04LA4**	53	10000	-
0.11	0.17	520*	1.0	8362	**BS30G06-../D04LA4**	53	10000	-

The torques marked (*) are maximum permissible torques for service factor f_B=1.0.

0.12 kW

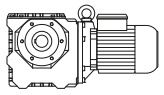

P_N	50 Hz			i	Type	m		
	n_2	M_2	f_B					
[kW]	[1/min]	[Nm]	[—]	[:1]		[kg]	[N]	[N]
0.12	295	3.4	4.4	4.60	**BS02-../DSE04LA4**	3.5	1000	-
0.12	250	4.0	5.0	5.40	**BS02-../DSE04LA4**	3.5	1000	-
0.12	200	4.9	5.1	6.75	**BS02-../DSE04LA4**	3.5	1000	-
0.12	164	5.8	4.3	8.25	**BS02-../DSE04LA4**	3.5	1100	-
0.12	127	7.3	3.4	10.67	**BS02-../DSE04LA4**	3.5	1250	-
0.12	100	8.9	2.8	13.50	**BS02-../DSE04LA4**	3.5	1250	-
0.12	75	11.3	2.2	18.00	**BS02-../DSE04LA4**	3.5	1250	-
0.12	62	12.9	1.95	22.00	**BS02-../DSE04LA4**	3.5	1250	-
0.12	50	14.4	1.75	27.00	**BS02-../DSE04LA4**	3.5	1250	-
0.12	41	16.7	1.5	33.00	**BS02-../DSE04LA4**	3.5	1250	-
0.12	31.5	22.5	1.05	43.00	**BS02-../DSE04LA4**	3.5	1250	-
0.12	25	26	0.85	54.00	**BS02-../DSE04LA4**	3.5	1250	-
0.12	83	10.6	3.3	16.31	**BS04-../DSE04LA4**	3.9	1970	-
0.12	75	10.8	3.1	18.00	**BS04-../DSE04LA4**	3.9	1950	-
0.12	65	13.3	2.8	20.96	**BS04-../DSE04LA4**	3.9	2100	-
0.12	56	15.5	2.2	24.25	**BS04-../DSE04LA4**	3.9	2250	-
0.12	52	15.6	2.4	26.21	**BS04-../DSE04LA4**	3.9	2250	-
0.12	43	18.6	2.0	31.50	**BS04-../DSE04LA4**	3.9	2250	-
0.12	35.5	22	1.7	38.42	**BS04-../DSE04LA4**	3.9	2250	-
0.12	28.5	27	1.4	47.86	**BS04-../DSE04LA4**	3.9	2250	-
0.12	21.5	33.5	1.05	64.06	**BS04-../DSE04LA4**	3.9	2250	-
0.12	19	39.5	0.96	71.18	**BS04-../DSE04LA4**	3.9	2250	-
0.12	18	38.5	0.99	77.00	**BS04-../DSE04LA4**	3.9	2250	-
0.12	14.5	46.5	0.82	93.92	**BS04-../DSE04LA4**	3.9	2250	-
0.12	3.6	94*	1.0	381.5	**BS06G04-../DSE04LA4**	11	3500	-
0.12	2.9	94*	1.0	474.8	**BS06G04-../DSE04LA4**	11	3500	-
0.12	2.5	100*	1.0	552.6	**BS06G04-../DSE04LA4**	11	3500	-
0.12	2.3	94*	1.0	610.7	**BS06G04-../DSE04LA4**	11	3500	-
0.12	2.0	94*	1.0	704.7	**BS06G04-../DSE04LA4**	11	3500	-
0.12	1.6	94*	1.0	847.0	**BS06G04-../DSE04LA4**	11	3500	-
0.12	1.5	94*	1.0	939.6	**BS06G04-../DSE04LA4**	11	3500	-
0.12	1.2	94*	1.0	1170	**BS06G04-../DSE04LA4**	11	3500	-
0.12	0.9	94*	1.0	1503	**BS06G04-../DSE04LA4**	11	3500	-
0.12	0.85	94*	1.0	1654	**BS06G04-../DSE04LA4**	11	3500	-
0.12	0.75	94*	1.0	1914	**BS06G04-../DSE04LA4**	11	3500	-
0.12	0.65	94*	1.0	2200	**BS06G04-../DSE04LA4**	11	3500	-
0.12	0.49	94*	1.0	2768	**BS06G04-../DSE04LA4**	11	3500	-
0.12	0.45	94*	1.0	3007	**BS06G04-../DSE04LA4**	11	3500	-
0.12	0.41	94*	1.0	3308	**BS06G04-../DSE04LA4**	11	3500	-
0.12	0.37	94*	1.0	3721	**BS06G04-../DSE04LA4**	11	3500	-
0.12	0.32	94*	1.0	4304	**BS06G04-../DSE04LA4**	11	3500	-
0.12	0.28	98*	1.0	4947	**BS06G04-../DSE04LA4**	11	3500	-
0.12	0.25	98*	1.0	5442	**BS06G04-../DSE04LA4**	11	3500	-
0.12	0.22	100*	1.0	6234	**BS06G04-../DSE04LA4**	11	3500	-
0.12	28	29	3.0	48.60	**BS06-../DSE04LA4**	8.4	3500	-
0.12	23.5	34.5	2.6	58.15	**BS06-../DSE04LA4**	8.4	3500	-
0.12	21.5	36	2.2	64.06	**BS06-../DSE04LA4**	8.4	3500	-
0.12	19	42.5	2.2	71.18	**BS06-../DSE04LA4**	8.4	3500	-
0.12	18	42.5	2.0	77.00	**BS06-../DSE04LA4**	8.4	3500	-
0.12	15	53	1.85	90.00	**BS06-../DSE04LA4**	8.4	3500	-
0.12	13.5	58	1.7	103.1	**BS06-../DSE04LA4**	8.4	3500	-
0.12	11.5	64	1.45	118.8	**BS06-../DSE04LA4**	8.4	3500	-
0.12	10.5	73	1.4	129.0	**BS06-../DSE04LA4**	8.4	3500	-
0.12	9.2	80	1.35	146.8	**BS06-../DSE04LA4**	8.4	3500	-
0.12	7.8	88	1.1	174.0	**BS06-../DSE04LA4**	8.4	3500	-
0.12	6.2	109	0.9	220.0	**BS06-../DSE04LA4**	8.4	3500	-
0.12	5.4	123	0.8	252.0	**BS06-../DSE04LA4**	8.4	3500	-
0.12	6.8	107	1.4	200.0	**BS10Z-../DSE04LA4**	21	6000	-
0.12	5.4	135	1.35	254.0	**BS10Z-../DSE04LA4**	21	6000	-
0.12	4.5	157	1.2	302.5	**BS10Z-../DSE04LA4**	21	6000	-
0.12	3.8	186	1.0	360.3	**BS10Z-../DSE04LA4**	21	6000	-
0.12	3.2	215	0.88	432.4	**BS10Z-../DSE04LA4**	21	6000	-
0.12	1.4	160*	1.0	969.9	**BS10G06-../DSE04LA4**	25	6000	-
0.12	1.2	160*	1.0	1166	**BS10G06-../DSE04LA4**	25	6000	-
0.12	1.1	160*	1.0	1342	**BS10G06-../DSE04LA4**	25	6000	-
0.12	0.9	160*	1.0	1528	**BS10G06-../DSE04LA4**	25	6000	-

The torques marked (*) are maximum permissible torques for service factor f_B=1.0.

0.12 kW

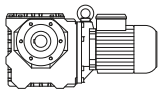

P_N	50 Hz			i	**Type**	m		
	n_2	M_2	f_B					
[kW]	[1/min]	[Nm]	[—]	[:1]		[kg]	[N]	[N]
0.12	0.85	160*	1.0	1668	**BS10G06-../DSE04LA4**	25	6000	-
0.12	0.7	160*	1.0	1963	**BS10G06-../DSE04LA4**	25	6000	-
0.12	0.6	160*	1.0	2348	**BS10G06-../DSE04LA4**	25	6000	-
0.12	0.55	160*	1.0	2635	**BS10G06-../DSE04LA4**	25	6000	-
0.12	0.47	160*	1.0	2875	**BS10G06-../DSE04LA4**	25	6000	-
0.12	0.41	160*	1.0	3332	**BS10G06-../DSE04LA4**	25	6000	-
0.12	0.38	160*	1.0	3635	**BS10G06-../DSE04LA4**	25	6000	-
0.12	0.33	160*	1.0	4163	**BS10G06-../DSE04LA4**	25	6000	-
0.12	0.29	160*	1.0	4776	**BS10G06-../DSE04LA4**	25	6000	-
0.12	0.26	160*	1.0	5209	**BS10G06-../DSE04LA4**	25	6000	-
0.12	0.23	164*	1.0	6019	**BS10G06-../DSE04LA4**	25	6000	-
0.12	0.21	164*	1.0	6565	**BS10G06-../DSE04LA4**	25	6000	-
0.12	0.19	164*	1.0	7471	**BS10G06-../DSE04LA4**	25	6000	-
0.12	0.16	164*	1.0	8703	**BS10G06-../DSE04LA4**	25	6000	-
0.12	6.8	107	2.6	201.4	**BS20Z-../DSE04LA4**	32	8000	-
0.12	5.3	138	2.1	257.8	**BS20Z-../DSE04LA4**	32	8000	-
0.12	4.5	160	1.9	300.1	**BS20Z-../DSE04LA4**	32	8000	-
0.12	3.8	186	1.7	359.9	**BS20Z-../DSE04LA4**	32	8000	-
0.12	3.2	215	1.55	430.8	**BS20Z-../DSE04LA4**	32	8000	-
0.12	2.6	240	1.5	539.7	**BS20Z-../DSE04LA4**	32	8000	-
0.12	2.2	280	1.2	619.2	**BS20Z-../DSE04LA4**	32	8000	-
0.12	1.8	340	0.91	763.4	**BS20Z-../DSE04LA4**	32	8000	-
	1.7	270*	1.0	831.7	**BS20G06-../DSE04LA4**	35	8000	-
0.12	1.4	270*	1.0	1000	**BS20G06-../DSE04LA4**	35	8000	-
0.12	1.1	270*	1.0	1311	**BS20G06-../DSE04LA4**	35	8000	-
0.12	0.9	270*	1.0	1543	**BS20G06-../DSE04LA4**	35	8000	-
0.12	0.85	270*	1.0	1683	**BS20G06-../DSE04LA4**	35	8000	-
0.12	0.7	270*	1.0	2014	**BS20G06-../DSE04LA4**	35	8000	-
0.12	0.55	270*	1.0	2465	**BS20G06-../DSE04LA4**	35	8000	-
0.12	0.48	270*	1.0	2857	**BS20G06-../DSE04LA4**	35	8000	-
0.12	0.44	270*	1.0	3117	**BS20G06-../DSE04LA4**	35	8000	-
0.12	0.38	270*	1.0	3570	**BS20G06-../DSE04LA4**	35	8000	-
0.12	0.33	270*	1.0	4096	**BS20G06-../DSE04LA4**	35	8000	-
0.12	0.28	270*	1.0	4910	**BS20G06-../DSE04LA4**	35	8000	-
0.12	0.23	270*	1.0	5880	**BS20G06-../DSE04LA4**	35	8000	-
0.12	0.19	275*	1.0	7363	**BS20G06-../DSE04LA4**	35	8000	-
0.12	0.17	275*	1.0	8031	**BS20G06-../DSE04LA4**	35	8000	-
0.12	0.15	280*	1.0	9220	**BS20G06-../DSE04LA4**	35	8000	-
0.12	1.4	560	0.88	1022	**BS30G06-../DSE04LA4**	53	10000	-
0.12	1.2	490*	1.0	1176	**BS30G06-../DSE04LA4**	53	10000	-
0.12	0.95	490*	1.0	1461	**BS30G06-../DSE04LA4**	53	10000	-
0.12	0.9	490*	1.0	1576	**BS30G06-../DSE04LA4**	53	10000	-
0.12	0.75	490*	1.0	1886	**BS30G06-../DSE04LA4**	53	10000	-
0.12	0.6	490*	1.0	2308	**BS30G06-../DSE04LA4**	53	10000	-
0.12	0.55	490*	1.0	2518	**BS30G06-../DSE04LA4**	53	10000	-
0.12	0.47	490*	1.0	2919	**BS30G06-../DSE04LA4**	53	10000	-
0.12	0.41	490*	1.0	3344	**BS30G06-../DSE04LA4**	53	10000	-
0.12	0.38	490*	1.0	3647	**BS30G06-../DSE04LA4**	53	10000	-
0.12	0.33	490*	1.0	4184	**BS30G06-../DSE04LA4**	53	10000	-
0.12	0.28	510*	1.0	4905	**BS30G06-../DSE04LA4**	53	10000	-
0.12	0.24	520*	1.0	5783	**BS30G06-../DSE04LA4**	53	10000	-
0.12	0.22	520*	1.0	6308	**BS30G06-../DSE04LA4**	53	10000	-
0.12	0.19	520*	1.0	7179	**BS30G06-../DSE04LA4**	53	10000	-
0.12	0.17	520*	1.0	8362	**BS30G06-../DSE04LA4**	53	10000	-

0.18 kW

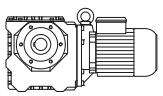

P_N	50 Hz			i	**Type**	m		
	n_2	M_2	f_B					
[kW]	[1/min]	[Nm]	[—]	[:1]		[kg]	[N]	[N]
0.18	295	5.1	2.9	4.60	**BS02-../DSE05LA4**	5.3	1000	-
0.18	250	6.0	3.3	5.40	**BS02-../DSE05LA4**	5.3	1000	-
0.18	200	7.3	3.4	6.75	**BS02-../DSE05LA4**	5.3	1000	-
0.18	164	8.8	2.8	8.25	**BS02-../DSE05LA4**	5.3	1100	-

The torques marked (*) are maximum permissible torques for service factor f_B=1.0.

0.18 kW

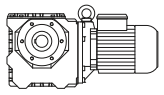

P_N	50 Hz			i	Type	m		
	n_2	M_2	f_B					
[kW]	[1/min]	[Nm]	[—]	[:1]		[kg]	[N]	[N]
0.18	127	11	2.3	10.67	**BS02-../DSE05LA4**	5.3	1250	-
0.18	100	13.4	1.85	13.50	**BS02-../DSE05LA4**	5.3	1250	-
0.18	75	16.9	1.5	18.00	**BS02-../DSE05LA4**	5.3	1250	-
0.18	62	19.4	1.3	22.00	**BS02-../DSE05LA4**	5.3	1250	-
0.18	50	21.5	1.15	27.00	**BS02-../DSE05LA4**	5.3	1250	-
0.18	41	25	1.0	33.00	**BS02-../DSE05LA4**	5.3	1250	-
0.18	72	18.1	3.0	19.00	**BS03-../DSE05LA4**	5.4	1950	-
0.18	54	21.5	2.6	25.00	**BS03-../DSE05LA4**	5.4	1950	-
0.18	41	25.5	2.2	33.00	**BS03-../DSE05LA4**	5.4	1950	-
0.18	35	31	1.75	39.00	**BS03-../DSE05LA4**	5.4	1950	-
0.18	27	36.5	1.5	50.00	**BS03-../DSE05LA4**	5.4	1950	-
0.18	22	41	1.15	62.00	**BS03-../DSE05LA4**	5.4	1950	-
0.18	18	48.5	0.82	75.00	**BS03-../DSE05LA4**	5.4	1950	-
0.18	126	10.6	3.0	10.73	**BS04-../DSE05LA4**	5.8	1600	-
0.18	104	12.7	2.6	13.09	**BS04-../DSE05LA4**	5.8	1760	-
0.18	83	15.9	2.2	16.31	**BS04-../DSE05LA4**	5.8	1970	-
0.18	75	16.2	2.1	18.00	**BS04-../DSE05LA4**	5.8	1950	-
0.18	65	20	1.85	20.96	**BS04-../DSE05LA4**	5.8	2100	-
0.18	56	23	1.5	24.25	**BS04-../DSE05LA4**	5.8	2250	-
0.18	52	23	1.65	26.21	**BS04-../DSE05LA4**	5.8	2250	-
0.18	43	27.5	1.4	31.50	**BS04-../DSE05LA4**	5.8	2250	-
0.18	35.5	33	1.1	38.42	**BS04-../DSE05LA4**	5.8	2250	-
0.18	28.5	41	0.93	47.86	**BS04-../DSE05LA4**	5.8	2250	-
0.18	56	24.5	3.1	24.25	**BS06-../DSE05LA4**	10	2600	-
0.18	52	24	3.2	26.21	**BS06-../DSE05LA4**	10	3000	-
0.18	43	29	2.8	31.50	**BS06-../DSE05LA4**	10	3200	-
0.18	33	37.5	2.3	41.29	**BS06-../DSE05LA4**	10	3500	-
0.18	28	44	2.0	48.60	**BS06-../DSE05LA4**	10	3500	-
0.18	23.5	51	1.8	58.15	**BS06-../DSE05LA4**	10	3500	-
0.18	21.5	54	1.5	64.06	**BS06-../DSE05LA4**	10	3500	-
0.18	19	64	1.45	71.18	**BS06-../DSE05LA4**	10	3500	-
0.18	18	63	1.35	77.00	**BS06-../DSE05LA4**	10	3500	-
0.18	15	80	1.25	90.00	**BS06-../DSE05LA4**	10	3500	-
0.18	13.5	87	1.15	103.1	**BS06-../DSE05LA4**	10	3500	-
0.18	11.5	97	0.97	118.8	**BS06-../DSE05LA4**	10	3500	-
0.18	10.5	109	0.95	129.0	**BS06-../DSE05LA4**	10	3500	-
0.18	9.2	121	0.88	146.8	**BS06-../DSE05LA4**	10	3500	-
0.18	28.5	45	3.2	47.59	**BS10-../DSE06LA4**	23	4050	-
0.18	24	53	2.8	57.12	**BS10-../DSE06LA4**	23	4350	-
0.18	22.5	51	2.9	60.74	**BS10-../DSE06LA4**	23	4550	-
0.18	19	66	2.4	71.96	**BS10-../DSE06LA4**	23	5000	-
0.18	16.5	77	1.95	84.36	**BS10-../DSE06LA4**	23	5300	-
0.18	13.5	81	2.0	103.4	**BS10-../DSE06LA4**	23	5600	-
0.18	11.5	110	1.1	119.6	**BS10-../DSE06LA4**	23	6000	-
0.18	10.5	104	1.6	130.3	**BS10-../DSE06LA4**	23	6000	-
0.18	8.9	123	1.35	152.7	**BS10-../DSE06LA4**	23	6000	-
0.18	7.2	152	1.1	188.6	**BS10-../DSE06LA4**	23	6000	-
0.18	6.3	174	1.05	216.6	**BS10-../DSE06LA4**	23	6000	-
0.18	5.4	200	0.9	254.0	**BS10Z-../DSE06LA4**	24	6000	-
0.18	4.5	235	0.81	302.5	**BS10Z-../DSE06LA4**	24	6000	-
0.18	13	87	3.1	106.3	**BS20-../DSE06LA4**	34	7600	-
0.18	11	103	2.6	127.3	**BS20-../DSE06LA4**	34	8000	-
0.18	8.5	133	2.1	159.4	**BS20-../DSE06LA4**	34	8000	-
0.18	7.4	153	1.85	183.0	**BS20-../DSE06LA4**	34	8000	-
0.18	6.0	183	1.6	225.6	**BS20-../DSE06LA4**	34	8000	-
0.18	5.3	205	1.45	257.8	**BS20Z-../DSE06LA4**	35	8000	-
0.18	4.5	240	1.25	300.1	**BS20Z-../DSE06LA4**	35	8000	-
0.18	3.8	280	1.15	359.9	**BS20Z-../DSE06LA4**	35	8000	-
0.18	3.2	325	1.0	430.8	**BS20Z-../DSE06LA4**	35	8000	-
0.18	2.6	360	1.0	539.7	**BS20Z-../DSE06LA4**	35	8000	-
0.18	6.3	180	2.9	216.4	**BS30-../DSE06LA4**	51	10000	-
0.18	5.2	215	2.6	261.6	**BS30Z-../DSE06LA4**	54	10000	-
0.18	4.5	245	2.4	306.6	**BS30Z-../DSE06LA4**	54	10000	-
0.18	3.8	330	1.2	359.6	**BS30Z-../DSE06LA4**	54	10000	-

The torques marked (*) are maximum permissible torques for service factor f_B=1.0.

0.18 kW

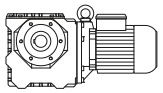

P_N	50 Hz			i	Type	m		
	n_2	M_2	f_B					
[kW]	[1/min]	[Nm]	[—]	[:1]		[kg]	[N]	[N]
0.18	3.5	315	1.85	390.2	**BS30Z-../DSE06LA4**	54	10000	-
0.18	3.0	365	1.65	457.3	**BS30Z-../DSE06LA4**	54	10000	-
0.18	2.6	420	1.45	539.3	**BS30Z-../DSE06LA4**	54	10000	-
0.18	2.1	490	1.2	651.0	**BS30Z-../DSE06LA4**	54	10000	-
0.18	1.7	580	0.82	804.1	**BS30Z-../DSE06LA4**	54	10000	-
0.18	4.7	270	2.6	287.7	**BS40Z-../DSE06LA4**	68	15000	-
0.18	3.1	345	2.9	446.8	**BS40Z-../DSE06LA4**	68	15000	-
0.18	2.6	415	2.7	520.8	**BS40Z-../DSE06LA4**	68	15000	-
0.18	2.3	455	2.0	612.1	**BS40Z-../DSE06LA4**	68	15000	-
0.18	1.9	540	1.4	736.5	**BS40Z-../DSE06LA4**	68	15000	-
0.18	1.5	670	1.1	908.2	**BS40Z-../DSE06LA4**	68	15000	-
0.18	1.4	850	1.05	965.5	**BS40G10-../DSE06LA4**	73	15000	-
0.18	1.2	1000	0.88	1180	**BS40G10-../DSE06LA4**	73	15000	-

0.25 kW

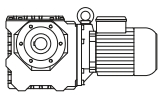

P_N	50 Hz			i	Type	m		
	n_2	M_2	f_B					
[kW]	[1/min]	[Nm]	[—]	[:1]		[kg]	[N]	[N]
0.25	295	7.1	2.1	4.60	**BS02-../DSE05LA4**	5.3	1000	-
0.25	250	8.4	2.4	5.40	**BS02-../DSE05LA4**	5.3	1000	-
0.25	200	10.2	2.5	6.75	**BS02-../DSE05LA4**	5.3	1000	-
0.25	164	12.2	2.0	8.25	**BS02-../DSE05LA4**	5.3	1100	-
0.25	127	15.4	1.6	10.67	**BS02-../DSE05LA4**	5.3	1250	-
0.25	100	18.6	1.35	13.50	**BS02-../DSE05LA4**	5.3	1250	-
0.25	75	23.5	1.05	18.00	**BS02-../DSE05LA4**	5.3	1250	-
0.25	62	26.5	0.94	22.00	**BS02-../DSE05LA4**	5.3	1250	-
0.25	50	30	0.83	27.00	**BS02-../DSE05LA4**	5.3	1250	-
0.25	100	18.6	3.0	13.50	**BS03-../DSE05LA4**	5.4	1600	-
0.25	72	25	2.2	19.00	**BS03-../DSE05LA4**	5.4	1950	-
0.25	54	30.5	1.8	25.00	**BS03-../DSE05LA4**	5.4	1950	-
0.25	41	35.5	1.55	33.00	**BS03-../DSE05LA4**	5.4	1950	-
0.25	35	43.5	1.25	39.00	**BS03-../DSE05LA4**	5.4	1950	-
0.25	27	51	1.1	50.00	**BS03-../DSE05LA4**	5.4	1950	-
0.25	22	57	0.84	62.00	**BS03-../DSE05LA4**	5.4	1950	-
0.25	225	8.2	3.2	6.13	**BS04-../DSE05LA4**	5.8	1300	-
0.25	152	12.2	2.5	8.93	**BS04-../DSE05LA4**	5.8	1500	-
0.25	126	14.7	2.2	10.73	**BS04-../DSE05LA4**	5.8	1600	-
0.25	104	17.6	1.9	13.09	**BS04-../DSE05LA4**	5.8	1760	-
0.25	83	22	1.6	16.31	**BS04-../DSE05LA4**	5.8	1970	-
0.25	75	22.5	1.5	18.00	**BS04-../DSE05LA4**	5.8	1950	-
0.25	65	27.5	1.35	20.96	**BS04-../DSE05LA4**	5.8	2100	-
0.25	56	32	1.05	24.25	**BS04-../DSE05LA4**	5.8	2250	-
0.25	52	32.5	1.15	26.21	**BS04-../DSE05LA4**	5.8	2250	-
0.25	43	38.5	0.99	31.50	**BS04-../DSE05LA4**	5.8	2250	-
0.25	35.5	46	0.8	38.42	**BS04-../DSE05LA4**	5.8	2250	-
0.25	82	23	3.1	16.56	**BS06-../DSE05LA4**	10	2400	-
0.25	69	27.5	2.7	19.82	**BS06-../DSE05LA4**	10	2500	-
0.25	56	34	2.3	24.25	**BS06-../DSE05LA4**	10	2600	-
0.25	52	33.5	2.3	26.21	**BS06-../DSE05LA4**	10	3000	-
0.25	43	40.5	2.0	31.50	**BS06-../DSE05LA4**	10	3200	-
0.25	33	52	1.65	41.29	**BS06-../DSE05LA4**	10	3500	-
0.25	28	61	1.45	48.60	**BS06-../DSE05LA4**	10	3500	-
0.25	23.5	72	1.25	58.15	**BS06-../DSE05LA4**	10	3500	-
0.25	21.5	75	1.05	64.06	**BS06-../DSE05LA4**	10	3500	-
0.25	19	89	1.05	71.18	**BS06-../DSE05LA4**	10	3500	-
0.25	18	88	0.97	77.00	**BS06-../DSE05LA4**	10	3500	-
0.25	15	111	0.88	90.00	**BS06-../DSE05LA4**	10	3500	-
0.25	13.5	122	0.82	103.1	**BS06-../DSE05LA4**	10	3500	-
0.25	40.5	44.5	3.0	33.55	**BS10-../DSE06LA4**	23	3550	-
0.25	34	52	2.7	39.96	**BS10-../DSE06LA4**	23	3800	-

The torques marked (*) are maximum permissible torques for service factor f_B=1.0.

0.25 kW

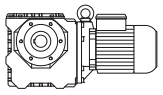

P_N	50 Hz			i	Type	m		
	n_2	M_2	f_B					
[kW]	[1/min]	[Nm]	[—]	[:1]		[kg]	[N]	[N]
0.25	28.5	62	2.3	47.59	**BS10-../DSE06LA4**	23	4050	-
0.25	24	73	2.1	57.12	**BS10-../DSE06LA4**	23	4350	-
0.25	22.5	71	2.1	60.74	**BS10-../DSE06LA4**	23	4550	-
0.25	19	92	1.75	71.96	**BS10-../DSE06LA4**	23	5000	-
0.25	16.5	107	1.4	84.36	**BS10-../DSE06LA4**	23	5300	-
0.25	13.5	113	1.4	103.4	**BS10-../DSE06LA4**	23	5600	-
0.25	10.5	145	1.15	130.3	**BS10-../DSE06LA4**	23	6000	-
0.25	8.9	171	0.96	152.7	**BS10-../DSE06LA4**	23	6000	-
0.25	7.2	210	0.81	188.6	**BS10-../DSE06LA4**	23	6000	-
0.25	19.5	91	3.3	70.30	**BS20-../DSE06LA4**	34	6300	-
0.25	18	87	3.1	76.18	**BS20-../DSE06LA4**	34	6600	-
0.25	15.5	101	2.7	88.67	**BS20-../DSE06LA4**	34	7000	-
0.25	13	121	2.2	106.3	**BS20-../DSE06LA4**	34	7600	-
0.25	11	143	1.9	127.3	**BS20-../DSE06LA4**	34	8000	-
0.25	8.5	185	1.5	159.4	**BS20-../DSE06LA4**	34	8000	-
0.25	7.4	210	1.35	183.0	**BS20-../DSE06LA4**	34	8000	-
0.25	6.0	250	1.15	225.6	**BS20-../DSE06LA4**	34	8000	-
0.25	5.3	285	1.05	257.8	**BS20Z-../DSE06LA4**	35	8000	-
0.25	4.5	330	0.91	300.1	**BS20Z-../DSE06LA4**	35	8000	-
0.25	3.8	385	0.83	359.9	**BS20Z-../DSE06LA4**	35	8000	-
0.25	9.0	177	3.1	151.1	**BS30-../DSE06LA4**	51	9500	-
0.25	7.3	215	2.5	186.7	**BS30-../DSE06LA4**	51	10000	-
0.25	6.3	250	2.1	216.4	**BS30-../DSE06LA4**	51	10000	-
0.25	5.2	300	1.85	261.6	**BS30Z-../DSE06LA4**	54	10000	-
0.25	4.5	340	1.7	306.6	**BS30Z-../DSE06LA4**	54	10000	-
0.25	3.8	460	0.86	359.6	**BS30Z-../DSE06LA4**	54	10000	-
0.25	3.5	440	1.35	390.2	**BS30Z-../DSE06LA4**	54	10000	-
0.25	3.0	500	1.2	457.3	**BS30Z-../DSE06LA4**	54	10000	-
0.25	2.6	580	1.05	539.3	**BS30Z-../DSE06LA4**	54	10000	-
0.25	2.1	680	0.85	651.0	**BS30Z-../DSE06LA4**	54	10000	-
0.25	6.9	255	2.7	197.1	**BS40Z-../DSE06LA4**	68	15000	-
0.25	5.5	270	3.3	249.6	**BS40Z-../DSE06LA4**	68	15000	-
0.25	4.7	375	1.9	287.7	**BS40Z-../DSE06LA4**	68	15000	-
0.25	4.5	330	3.2	302.1	**BS40Z-../DSE06LA4**	68	15000	-
0.25	3.8	395	2.7	356.8	**BS40Z-../DSE06LA4**	68	15000	-
0.25	3.1	485	2.0	446.8	**BS40Z-../DSE06LA4**	68	15000	-
0.25	2.6	570	1.95	520.8	**BS40Z-../DSE06LA4**	68	15000	-
0.25	2.3	630	1.45	612.1	**BS40Z-../DSE06LA4**	68	15000	-
0.25	1.9	750	1.0	736.5	**BS40Z-../DSE06LA4**	68	15000	-
0.25	1.5	930	0.8	908.2	**BS40Z-../DSE06LA4**	68	15000	-

0.37 kW

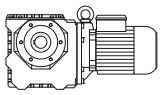

P_N	50 Hz			i	Type	m		
	n_2	M_2	f_B					
[kW]	[1/min]	[Nm]	[—]	[:1]		[kg]	[N]	[N]
0.37	295	10.5	1.45	4.60	**BS02-../DSE07LA4**	9.3	1000	-
0.37	250	12.4	1.6	5.40	**BS02-../DSE07LA4**	9.3	1000	-
0.37	200	15.1	1.65	6.75	**BS02-../DSE07LA4**	9.3	1000	-
0.37	164	18	1.4	8.25	**BS02-../DSE07LA4**	9.3	1100	-
0.37	127	22.5	1.1	10.67	**BS02-../DSE07LA4**	9.3	1250	-
0.37	100	27.5	0.91	13.50	**BS02-../DSE07LA4**	9.3	1250	-
0.37	100	27.5	2.0	13.50	**BS03-../DSE07LA4**	9.4	1600	-
0.37	72	37	1.5	19.00	**BS03-../DSE07LA4**	9.4	1950	-
0.37	54	45	1.2	25.00	**BS03-../DSE07LA4**	9.4	1950	-
0.37	41	52	1.05	33.00	**BS03-../DSE07LA4**	9.4	1950	-
0.37	35	64	0.86	39.00	**BS03-../DSE07LA4**	9.4	1950	-
0.37	225	12.2	2.1	6.13	**BS04-../DSE07LA4**	9.8	1300	-
0.37	152	18.1	1.65	8.93	**BS04-../DSE07LA4**	9.8	1500	-
0.37	126	21.5	1.5	10.73	**BS04-../DSE07LA4**	9.8	1600	-
0.37	104	26	1.25	13.09	**BS04-../DSE07LA4**	9.8	1760	-

The torques marked (*) are maximum permissible torques for service factor f_B=1.0.

0.37 kW

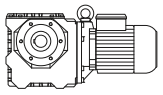

P_N	50 Hz			i	Type	m		
	n_2	M_2	f_B					
[kW]	[1/min]	[Nm]	[—]	[:1]		[kg]	[N]	[N]
0.37	83	32.5	1.1	16.31	**BS04-../DSE07LA4**	9.8	1970	-
0.37	75	33	1.05	18.00	**BS04-../DSE07LA4**	9.8	1950	-
0.37	65	41	0.9	20.96	**BS04-../DSE07LA4**	9.8	2100	-
0.37	152	18.8	3.3	8.93	**BS06-../DSE07LA4**	14	1710	-
0.37	126	22.5	2.9	10.73	**BS06-../DSE07LA4**	14	1850	-
0.37	96	29.5	2.3	14.07	**BS06-../DSE07LA4**	14	2200	-
0.37	82	34	2.1	16.56	**BS06-../DSE07LA4**	14	2400	-
0.37	69	40.5	1.85	19.82	**BS06-../DSE07LA4**	14	2500	-
0.37	56	50	1.55	24.25	**BS06-../DSE07LA4**	14	2600	-
0.37	52	49.5	1.55	26.21	**BS06-../DSE07LA4**	14	3000	-
0.37	43	59	1.35	31.50	**BS06-../DSE07LA4**	14	3200	-
0.37	33	77	1.1	41.29	**BS06-../DSE07LA4**	14	3500	-
0.37	28	90	0.98	48.60	**BS06-../DSE07LA4**	14	3500	-
0.37	23.5	106	0.86	58.15	**BS06-../DSE07LA4**	14	3500	-
0.37	63	44.5	2.8	21.61	**BS10-../DSE07LA4**	26	3000	-
0.37	52	53	2.5	26.42	**BS10-../DSE07LA4**	26	3250	-
0.37	40.5	66	2.0	33.55	**BS10-../DSE07LA4**	26	3550	-
0.37	34	77	1.8	39.96	**BS10-../DSE07LA4**	26	3800	-
0.37	28.5	92	1.6	47.59	**BS10-../DSE07LA4**	26	4050	-
0.37	24	108	1.4	57.12	**BS10-../DSE07LA4**	26	4350	-
0.37	22.5	105	1.45	60.74	**BS10-../DSE07LA4**	26	4550	-
0.37	19	137	1.15	71.96	**BS10-../DSE07LA4**	26	5000	-
0.37	16.5	158	0.95	84.36	**BS10-../DSE07LA4**	26	5300	-
0.37	13.5	167	0.96	103.4	**BS10-../DSE07LA4**	26	5600	-
0.37	32.5	82	3.3	42.08	**BS20-../DSE07LA4**	36	5200	-
0.37	28	94	2.9	48.98	**BS20-../DSE07LA4**	36	5500	-
0.37	27	87	3.1	50.44	**BS20-../DSE07LA4**	36	5700	-
0.37	23	115	2.4	58.74	**BS20-../DSE07LA4**	36	5900	-
0.37	19.5	135	2.2	70.30	**BS20-../DSE07LA4**	36	6300	-
0.37	18	129	2.1	76.18	**BS20-../DSE07LA4**	36	6600	-
0.37	15.5	150	1.8	88.67	**BS20-../DSE07LA4**	36	7000	-
0.37	13	179	1.5	106.3	**BS20-../DSE07LA4**	36	7600	-
0.37	11	210	1.3	127.3	**BS20-../DSE07LA4**	36	8000	-
0.37	8.5	270	1.0	159.4	**BS20-../DSE07LA4**	36	8000	-
0.37	7.4	315	0.89	183.0	**BS20-../DSE07LA4**	36	8000	-
0.37	6.8	330	0.85	201.4	**BS20Z-../DSE07LA4**	38	8000	-
0.37	16.5	164	2.5	83.48	**BS30-../DSE07LA4**	54	6800	-
0.37	15	162	3.0	90.59	**BS30-../DSE07LA4**	54	7700	-
0.37	13	184	2.8	106.2	**BS30-../DSE07LA4**	54	8200	-
0.37	11	215	2.4	125.2	**BS30-../DSE07LA4**	54	8700	-
0.37	9.0	260	2.1	151.1	**BS30-../DSE07LA4**	54	9500	-
0.37	7.3	315	1.7	186.7	**BS30-../DSE07LA4**	54	10000	-
0.37	6.3	370	1.4	216.4	**BS30-../DSE07LA4**	54	10000	-
0.37	5.2	445	1.25	261.6	**BS30Z-../DSE07LA4**	56	10000	-
0.37	4.5	510	1.15	306.6	**BS30Z-../DSE07LA4**	56	10000	-
0.37	3.5	650	0.91	390.2	**BS30Z-../DSE07LA4**	56	10000	-
0.37	3.0	750	0.8	457.3	**BS30Z-../DSE07LA4**	56	10000	-
0.37	6.9	375	1.85	197.1	**BS40Z-../DSE07LA4**	70	15000	-
0.37	5.5	400	2.3	249.6	**BS40Z-../DSE07LA4**	70	15000	-
0.37	4.7	550	1.3	287.7	**BS40Z-../DSE07LA4**	70	15000	-
0.37	4.5	490	2.2	302.1	**BS40Z-../DSE07LA4**	70	15000	-
0.37	3.8	580	1.85	356.8	**BS40Z-../DSE07LA4**	70	15000	-
0.37	3.1	710	1.4	446.8	**BS40Z-../DSE07LA4**	70	15000	-
0.37	2.6	850	1.3	520.8	**BS40Z-../DSE07LA4**	70	15000	-
0.37	2.3	930	0.98	612.1	**BS40Z-../DSE07LA4**	70	15000	-

The torques marked (*) are maximum permissible torques for service factor f_B=1.0.

0.55 kW

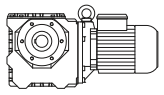

P_N	50 Hz			i	Type	m		
	n_2	M_2	f_B					
[kW]	[1/min]	[Nm]	[—]	[:1]		[kg]	[N]	[N]
0.55	305	15.1	2.6	4.60	**BS03-../DSE08MA4**	10	1070	-
0.55	235	19.6	2.2	6.00	**BS03-../DSE08MA4**	10	1170	-
0.55	175	25.5	1.9	8.00	**BS03-../DSE08MA4**	10	1320	-
0.55	140	31.5	1.65	10.00	**BS03-../DSE08MA4**	10	1450	-
0.55	104	39	1.4	13.50	**BS03-../DSE08MA4**	10	1600	-
0.55	74	53	1.05	19.00	**BS03-../DSE08MA4**	10	1950	-
0.55	56	64	0.86	25.00	**BS03-../DSE08MA4**	10	1950	-
0.55	210	20	2.8	6.67	**BS06-../DSE08MA4**	16	1550	-
0.55	157	27	2.3	8.93	**BS06-../DSE08MA4**	16	1710	-
0.55	131	32	2.0	10.73	**BS06-../DSE08MA4**	16	1850	-
0.55	100	42.5	1.6	14.07	**BS06-../DSE08MA4**	16	2200	-
0.55	85	49	1.45	16.56	**BS06-../DSE08MA4**	16	2400	-
0.55	71	59	1.25	19.82	**BS06-../DSE08MA4**	16	2500	-
0.55	58	72	1.05	24.25	**BS06-../DSE08MA4**	16	2600	-
0.55	54	71	1.1	26.21	**BS06-../DSE08MA4**	16	3000	-
0.55	44.5	86	0.93	31.50	**BS06-../DSE08MA4**	16	3200	-
0.55	113	37	2.9	12.49	**BS10-../DSE08MA4**	27	2400	-
0.55	83	50	2.4	16.92	**BS10-../DSE08MA4**	27	2700	-
0.55	65	64	1.95	21.61	**BS10-../DSE08MA4**	27	3000	-
0.55	62	58	2.0	22.60	**BS10-../DSE08MA4**	27	3200	-
0.55	53	77	1.7	26.42	**BS10-../DSE08MA4**	27	3250	-
0.55	46	78	1.65	30.63	**BS10-../DSE08MA4**	27	3550	-
0.55	42	95	1.4	33.55	**BS10-../DSE08MA4**	27	3550	-
0.55	35.5	110	1.25	39.96	**BS10-../DSE08MA4**	27	3800	-
0.55	29.5	133	1.1	47.59	**BS10-../DSE08MA4**	27	4050	-
0.55	25	155	0.97	57.12	**BS10-../DSE08MA4**	27	4350	-
0.55	23.5	149	1.0	60.74	**BS10-../DSE08MA4**	27	4550	-
0.55	19.5	199	0.8	71.96	**BS10-../DSE08MA4**	27	5000	-
0.55	51	80	3.1	27.86	**BS20-../DSE08MA4**	37	4450	-
0.55	46	82	3.0	30.63	**BS20-../DSE08MA4**	37	4750	-
0.55	43	94	2.9	32.87	**BS20-../DSE08MA4**	37	4750	-
0.55	35	108	2.4	40.25	**BS20-../DSE08MA4**	37	5300	-
0.55	33.5	119	2.3	42.08	**BS20-../DSE08MA4**	37	5200	-
0.55	29	135	2.0	48.98	**BS20-../DSE08MA4**	37	5500	-
0.55	28	125	2.2	50.44	**BS20-../DSE08MA4**	37	5700	-
0.55	24	164	1.7	58.74	**BS20-../DSE08MA4**	37	5900	-
0.55	20	196	1.55	70.30	**BS20-../DSE08MA4**	37	6300	-
0.55	18.5	187	1.45	76.18	**BS20-../DSE08MA4**	37	6600	-
0.55	16	215	1.25	88.67	**BS20-../DSE08MA4**	37	7000	-
0.55	13.5	255	1.05	106.3	**BS20-../DSE08MA4**	37	7600	-
0.55	11	315	0.86	127.3	**BS20-../DSE08MA4**	37	8000	-
0.55	28	144	3.1	50.04	**BS30-../DSE08MA4**	55	5900	-
0.55	24	168	2.7	58.64	**BS30-../DSE08MA4**	55	6900	-
0.55	20	183	2.6	71.17	**BS30-../DSE08MA4**	55	7000	-
0.55	17	235	1.75	83.48	**BS30-../DSE08MA4**	55	6800	-
0.55	15.5	230	2.1	90.59	**BS30-../DSE08MA4**	55	7700	-
0.55	13.5	260	1.95	106.2	**BS30-../DSE08MA4**	55	8200	-
0.55	11.5	310	1.7	125.2	**BS30-../DSE08MA4**	55	8700	-
0.55	9.3	375	1.45	151.1	**BS30-../DSE08MA4**	55	9500	-
0.55	7.5	460	1.2	186.7	**BS30-../DSE08MA4**	55	10000	-
0.55	6.5	530	0.98	216.4	**BS30-../DSE08MA4**	55	10000	-
0.55	5.4	640	0.88	261.6	**BS30Z-../DSE08MA4**	58	10000	-
0.55	11.5	305	3.2	126.0	**BS40-../DSE08MA4**	68	14900	-
0.55	9.5	355	2.7	148.1	**BS40-../DSE08MA4**	68	15000	-
0.55	7.9	430	1.9	178.2	**BS40-../DSE08MA4**	68	15000	-
0.55	6.4	510	1.55	219.7	**BS40-../DSE08MA4**	68	15000	-
0.55	5.7	580	1.55	249.6	**BS40Z-../DSE08MA4**	71	15000	-
0.55	4.9	790	0.91	287.7	**BS40Z-../DSE08MA4**	71	15000	-
0.55	4.7	700	1.55	302.1	**BS40Z-../DSE08MA4**	71	15000	-
0.55	4.0	820	1.3	356.8	**BS40Z-../DSE08MA4**	71	15000	-
0.55	3.2	1030	0.96	446.8	**BS40Z-../DSE08MA4**	71	15000	-
0.55	2.7	1220	0.9	520.8	**BS40Z-../DSE08MA4**	71	15000	-

The torques marked (*) are maximum permissible torques for service factor f_B=1.0.

0.75 kW

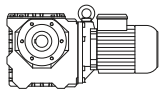

P_N	50 Hz			i	Type	m		
	n_2	M_2	f_B					
[kW]	[1/min]	[Nm]	[—]	[:1]		[kg]	[N]	[N]
0.75	305	20.5	1.95	4.60	**BS03-../DSE08LA4**	12	1070	-
0.75	235	26.5	1.65	6.00	**BS03-../DSE08LA4**	12	1170	-
0.75	175	35	1.35	8.00	**BS03-../DSE08LA4**	12	1320	-
0.75	140	42.5	1.2	10.00	**BS03-../DSE08LA4**	12	1450	-
0.75	104	53	1.05	13.50	**BS03-../DSE08LA4**	12	1600	-
0.75	210	27.5	2.0	6.67	**BS06-../DSE08LA4**	17	1550	-
0.75	157	36.5	1.7	8.93	**BS06-../DSE08LA4**	17	1710	-
0.75	131	44	1.5	10.73	**BS06-../DSE08LA4**	17	1850	-
0.75	100	58	1.15	14.07	**BS06-../DSE08LA4**	17	2200	-
0.75	85	67	1.05	16.56	**BS06-../DSE08LA4**	17	2400	-
0.75	71	80	0.94	19.82	**BS06-../DSE08LA4**	17	2500	-
0.75	54	96	0.8	26.21	**BS06-../DSE08LA4**	17	3000	-
0.75	113	50	2.2	12.49	**BS10-../DSE08LA4**	28	2400	-
0.75	83	69	1.75	16.92	**BS10-../DSE08LA4**	28	2700	-
0.75	65	88	1.4	21.61	**BS10-../DSE08LA4**	28	3000	-
0.75	62	79	1.5	22.60	**BS10-../DSE08LA4**	28	3200	-
0.75	53	105	1.25	26.42	**BS10-../DSE08LA4**	28	3250	-
0.75	46	107	1.2	30.63	**BS10-../DSE08LA4**	28	3550	-
0.75	42	129	1.05	33.55	**BS10-../DSE08LA4**	28	3550	-
0.75	35.5	151	0.93	39.96	**BS10-../DSE08LA4**	28	3800	-
0.75	29.5	182	0.8	47.59	**BS10-../DSE08LA4**	28	4050	-
0.75	83	69	3.2	16.92	**BS20-../DSE08LA4**	39	3700	-
0.75	63	92	2.5	22.23	**BS20-../DSE08LA4**	39	4100	-
0.75	61	84	2.7	23.13	**BS20-../DSE08LA4**	39	4300	-
0.75	51	109	2.3	27.86	**BS20-../DSE08LA4**	39	4450	-
0.75	46	112	2.2	30.63	**BS20-../DSE08LA4**	39	4750	-
0.75	43	128	2.1	32.87	**BS20-../DSE08LA4**	39	4750	-
0.75	35	147	1.75	40.25	**BS20-../DSE08LA4**	39	5300	-
0.75	33.5	162	1.65	42.08	**BS20-../DSE08LA4**	39	5200	-
0.75	29	185	1.45	48.98	**BS20-../DSE08LA4**	39	5500	-
0.75	28	171	1.6	50.44	**BS20-../DSE08LA4**	39	5700	-
0.75	24	220	1.25	58.74	**BS20-../DSE08LA4**	39	5900	-
0.75	20	265	1.15	70.30	**BS20-../DSE08LA4**	39	6300	-
0.75	18.5	255	1.05	76.18	**BS20-../DSE08LA4**	39	6600	-
0.75	16	295	0.92	88.67	**BS20-../DSE08LA4**	39	7000	-
0.75	42	139	3.0	33.55	**BS30-../DSE08LA4**	56	5200	-
0.75	37	145	2.9	37.92	**BS30-../DSE08LA4**	56	5500	-
0.75	36	161	2.7	39.31	**BS30-../DSE08LA4**	56	5500	-
0.75	28	196	2.3	50.04	**BS30-../DSE08LA4**	56	5900	-
0.75	24	225	2.0	58.64	**BS30-../DSE08LA4**	56	6900	-
0.75	20	250	1.9	71.17	**BS30-../DSE08LA4**	56	7000	-
0.75	17	320	1.3	83.48	**BS30-../DSE08LA4**	56	6800	-
0.75	15.5	315	1.55	90.59	**BS30-../DSE08LA4**	56	7700	-
0.75	13.5	360	1.4	106.2	**BS30-../DSE08LA4**	56	8200	-
0.75	11.5	420	1.25	125.2	**BS30-../DSE08LA4**	56	8700	-
0.75	9.3	510	1.05	151.1	**BS30-../DSE08LA4**	56	9500	-
0.75	7.5	630	0.86	186.7	**BS30-../DSE08LA4**	56	10000	-
0.75	20.5	265	2.8	69.60	**BS40-../DSE08LA4**	69	11800	-
0.75	16.5	295	3.1	86.33	**BS40-../DSE08LA4**	69	12900	-
0.75	13	365	2.6	108.1	**BS40-../DSE08LA4**	69	14000	-
0.75	11.5	415	2.4	126.0	**BS40-../DSE08LA4**	69	14900	-
0.75	9.5	490	2.0	148.1	**BS40-../DSE08LA4**	69	15000	-
0.75	7.9	580	1.4	178.2	**BS40-../DSE08LA4**	69	15000	-
0.75	6.4	700	1.15	219.7	**BS40-../DSE08LA4**	69	15000	-
0.75	5.7	790	1.15	249.6	**BS40Z-../DSE08LA4**	73	15000	-
0.75	4.7	960	1.1	302.1	**BS40Z-../DSE08LA4**	73	15000	-
0.75	4.0	1120	0.96	356.8	**BS40Z-../DSE08LA4**	73	15000	-

The torques marked (*) are maximum permissible torques for service factor f_B=1.0.

1.1 kW

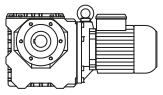

P_N	50 Hz			i	Type	m		
	n_2	M_2	f_B					
[kW]	[1/min]	[Nm]	[—]	[:1]		[kg]	[N]	[N]
1.1	305	30	1.35	4.60	**BS03-../DSE08XA4**	13	1070	-
1.1	235	39	1.15	6.00	**BS03-../DSE08XA4**	13	1170	-
1.1	175	51	0.94	8.00	**BS03-../DSE08XA4**	13	1320	-
1.1	140	63	0.83	10.00	**BS03-../DSE08XA4**	13	1450	-
1.1	210	40.5	1.4	6.67	**BS06-../DSE08XA4**	18	1550	-
1.1	157	54	1.15	8.93	**BS06-../DSE08XA4**	18	1710	-
1.1	131	64	1.0	10.73	**BS06-../DSE08XA4**	18	1850	-
1.1	100	85	0.8	14.07	**BS06-../DSE08XA4**	18	2200	-
1.1	113	74	1.45	12.49	**BS10-../DSE08XA4**	30	2400	-
1.1	83	101	1.2	16.92	**BS10-../DSE08XA4**	30	2700	-
1.1	65	129	0.97	21.61	**BS10-../DSE08XA4**	30	3000	-
1.1	62	116	1.0	22.60	**BS10-../DSE08XA4**	30	3200	-
1.1	53	154	0.84	26.42	**BS10-../DSE08XA4**	30	3250	-
1.1	46	157	0.83	30.63	**BS10-../DSE08XA4**	30	3550	-
1.1	110	77	2.6	12.77	**BS20-../DSE08XA4**	40	3350	-
1.1	83	102	2.2	16.92	**BS20-../DSE08XA4**	40	3700	-
1.1	63	135	1.7	22.23	**BS20-../DSE08XA4**	40	4100	-
1.1	61	123	1.85	23.13	**BS20-../DSE08XA4**	40	4300	-
1.1	51	160	1.55	27.86	**BS20-../DSE08XA4**	40	4450	-
1.1	46	164	1.5	30.63	**BS20-../DSE08XA4**	40	4750	-
1.1	43	188	1.45	32.87	**BS20-../DSE08XA4**	40	4750	-
1.1	35	215	1.2	40.25	**BS20-../DSE08XA4**	40	5300	-
1.1	33.5	235	1.15	42.08	**BS20-../DSE08XA4**	40	5200	-
1.1	29	270	1.0	48.98	**BS20-../DSE08XA4**	40	5500	-
1.1	28	250	1.1	50.44	**BS20-../DSE08XA4**	40	5700	-
1.1	24	325	0.86	58.74	**BS20-../DSE08XA4**	40	5900	-
1.1	67	130	2.9	20.94	**BS30-../DSE08XA4**	57	4300	-
1.1	59	133	2.8	24.06	**BS30-../DSE08XA4**	57	4600	-
1.1	52	167	2.4	27.07	**BS30-../DSE08XA4**	57	4750	-
1.1	46	171	2.3	30.63	**BS30-../DSE08XA4**	57	5000	-
1.1	42	205	2.0	33.55	**BS30-../DSE08XA4**	57	5200	-
1.1	37	210	2.0	37.92	**BS30-../DSE08XA4**	57	5500	-
1.1	36	235	1.85	39.31	**BS30-../DSE08XA4**	57	5500	-
1.1	28	285	1.6	50.04	**BS30-../DSE08XA4**	57	5900	-
1.1	24	335	1.35	58.64	**BS30-../DSE08XA4**	57	6900	-
1.1	20	365	1.3	71.17	**BS30-../DSE08XA4**	57	7000	-
1.1	17	475	0.86	83.48	**BS30-../DSE08XA4**	57	6800	-
1.1	15.5	465	1.05	90.59	**BS30-../DSE08XA4**	57	7700	-
1.1	13.5	520	0.98	106.2	**BS30-../DSE08XA4**	57	8200	-
1.1	11.5	620	0.84	125.2	**BS30-../DSE08XA4**	57	8700	-
1.1	29.5	275	3.0	47.69	**BS40-../DSE08XA4**	70	9600	-
1.1	23.5	315	2.7	60.38	**BS40-../DSE08XA4**	70	11200	-
1.1	20.5	390	1.9	69.60	**BS40-../DSE08XA4**	70	11800	-
1.1	19.5	375	2.3	73.09	**BS40-../DSE08XA4**	70	12100	-
1.1	16.5	435	2.1	86.33	**BS40-../DSE08XA4**	70	12900	-
1.1	13	540	1.75	108.1	**BS40-../DSE08XA4**	70	14000	-
1.1	11.5	610	1.6	126.0	**BS40-../DSE08XA4**	70	14900	-
1.1	9.5	710	1.35	148.1	**BS40-../DSE08XA4**	70	15000	-
1.1	7.9	860	0.95	178.2	**BS40-../DSE08XA4**	70	15000	-

1.5 kW

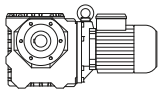

P_N	50 Hz			i	Type	m		
	n_2	M_2	f_B					
[kW]	[1/min]	[Nm]	[—]	[:1]		[kg]	[N]	[N]
1.5	114	100	1.1	12.49	**BS10-../DSE09LA4**	36	2400	-
1.5	84	136	0.88	16.92	**BS10-../DSE09LA4**	36	2700	-
1.5	112	103	1.95	12.77	**BS20-../DSE09LA4**	46	3350	-
1.5	84	138	1.6	16.92	**BS20-../DSE09LA4**	46	3700	-
1.5	64	181	1.25	22.23	**BS20-../DSE09LA4**	46	4100	-

The torques marked (*) are maximum permissible torques for service factor f_B=1.0.

1.5 kW

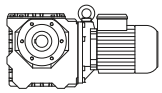

P_N	50 Hz			i	Type	m		
	n_2	M_2	f_B					
[kW]	[1/min]	[Nm]	[—]	[:1]		[kg]	[N]	[N]
1.5	62	166	1.35	23.13	**BS20-../DSE09LA4**	46	4300	-
1.5	51	215	1.15	27.86	**BS20-../DSE09LA4**	46	4450	-
1.5	46.5	220	1.15	30.63	**BS20-../DSE09LA4**	46	4750	-
1.5	43.5	250	1.1	32.87	**BS20-../DSE09LA4**	46	4750	-
1.5	35.5	290	0.9	40.25	**BS20-../DSE09LA4**	46	5300	-
1.5	34	320	0.84	42.08	**BS20-../DSE09LA4**	46	5200	-
1.5	28.5	335	0.81	50.44	**BS20-../DSE09LA4**	46	5700	-
1.5	107	111	3.0	13.29	**BS30-../DSE09LA4**	64	3600	-
1.5	84	141	2.6	16.92	**BS30-../DSE09LA4**	64	3950	-
1.5	68	174	2.2	20.94	**BS30-../DSE09LA4**	64	4300	-
1.5	60	179	2.1	24.06	**BS30-../DSE09LA4**	64	4600	-
1.5	53	220	1.8	27.07	**BS30-../DSE09LA4**	64	4750	-
1.5	46.5	230	1.75	30.63	**BS30-../DSE09LA4**	64	5000	-
1.5	42.5	275	1.55	33.55	**BS30-../DSE09LA4**	64	5200	-
1.5	37.5	285	1.45	37.92	**BS30-../DSE09LA4**	64	5500	-
1.5	36.5	315	1.35	39.31	**BS30-../DSE09LA4**	64	5500	-
1.5	28.5	385	1.15	50.04	**BS30-../DSE09LA4**	64	5900	-
1.5	24.5	450	1.0	58.64	**BS30-../DSE09LA4**	64	6900	-
1.5	20	500	0.96	71.17	**BS30-../DSE09LA4**	64	7000	-
1.5	16	610	0.8	90.59	**BS30-../DSE09LA4**	64	7700	-
1.5	46.5	225	3.3	30.63	**BS40-../DSE09LA4**	77	8700	-
1.5	43	265	2.9	33.35	**BS40-../DSE09LA4**	77	8300	-
1.5	37.5	275	2.8	38.13	**BS40-../DSE09LA4**	77	9400	-
1.5	35.5	315	2.5	40.37	**BS40-../DSE09LA4**	77	9000	-
1.5	30	370	2.2	47.69	**BS40-../DSE09LA4**	77	9600	-
1.5	24	420	2.0	60.38	**BS40-../DSE09LA4**	77	11200	-
1.5	20.5	530	1.4	69.60	**BS40-../DSE09LA4**	77	11800	-
1.5	19.5	510	1.75	73.09	**BS40-../DSE09LA4**	77	12100	-
1.5	16.5	590	1.55	86.33	**BS40-../DSE09LA4**	77	12900	-
1.5	13.5	710	1.35	108.1	**BS40-../DSE09LA4**	77	14000	-
1.5	11.5	830	1.2	126.0	**BS40-../DSE09LA4**	77	14900	-
1.5	9.6	960	1.0	148.1	**BS40-../DSE09LA4**	77	15000	-

2.2 kW

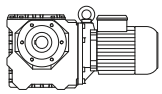

P_N	50 Hz			i	Type	m		
	n_2	M_2	f_B					
[kW]	[1/min]	[Nm]	[—]	[:1]		[kg]	[N]	[N]
2.2	112	151	1.3	12.77	**BS20-../DSE09XA4**	50	3350	-
2.2	84	200	1.1	16.92	**BS20-../DSE09XA4**	50	3700	-
2.2	64	265	0.87	22.23	**BS20-../DSE09XA4**	50	4100	-
2.2	62	240	0.95	23.13	**BS20-../DSE09XA4**	50	4300	-
2.2	107	162	2.0	13.29	**BS30-../DSE09XA4**	68	3600	-
2.2	84	205	1.75	16.92	**BS30-../DSE09XA4**	68	3950	-
2.2	68	255	1.5	20.94	**BS30-../DSE09XA4**	68	4300	-
2.2	60	260	1.4	24.06	**BS30-../DSE09XA4**	68	4600	-
2.2	53	325	1.25	27.07	**BS30-../DSE09XA4**	68	4750	-
2.2	46.5	335	1.2	30.63	**BS30-../DSE09XA4**	68	5000	-
2.2	42.5	405	1.05	33.55	**BS30-../DSE09XA4**	68	5200	-
2.2	37.5	420	1.0	37.92	**BS30-../DSE09XA4**	68	5500	-
2.2	36.5	465	0.92	39.31	**BS30-../DSE09XA4**	68	5500	-
2.2	28.5	560	0.8	50.04	**BS30-../DSE09XA4**	68	5900	-
2.2	84	210	3.2	16.92	**BS40-../DSE09XA4**	81	6400	-
2.2	68	250	2.8	21.06	**BS40-../DSE09XA4**	81	6900	-
2.2	61	250	2.7	23.59	**BS40-../DSE09XA4**	81	7900	-
2.2	55	310	2.4	26.18	**BS40-../DSE09XA4**	81	7500	-
2.2	46.5	330	2.3	30.63	**BS40-../DSE09XA4**	81	8700	-
2.2	43	390	2.0	33.35	**BS40-../DSE09XA4**	81	8300	-
2.2	37.5	405	1.95	38.13	**BS40-../DSE09XA4**	81	9400	-
2.2	35.5	465	1.7	40.37	**BS40-../DSE09XA4**	81	9000	-
2.2	30	540	1.55	47.69	**BS40-../DSE09XA4**	81	9600	-
2.2	24	620	1.4	60.38	**BS40-../DSE09XA4**	81	11200	-

The torques marked (*) are maximum permissible torques for service factor f_B=1.0.

2.2 kW

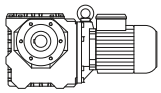

P_N	50 Hz			i	Type	m		
	n_2	M_2	f_B					
[kW]	[1/min]	[Nm]	[—]	[:1]		[kg]	[N]	[N]
2.2	20.5	780	0.95	69.60	**BS40-../DSE09XA4**	81	11800	-
2.2	19.5	750	1.15	73.09	**BS40-../DSE09XA4**	81	12100	-
2.2	16.5	870	1.05	86.33	**BS40-../DSE09XA4**	81	12900	-
2.2	13.5	1040	0.91	108.1	**BS40-../DSE09XA4**	81	14000	-
2.2	11.5	1220	0.8	126.0	**BS40-../DSE09XA4**	81	14900	-

3 kW

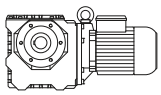

P_N	50 Hz			i	Type	m		
	n_2	M_2	f_B					
[kW]	[1/min]	[Nm]	[—]	[:1]		[kg]	[N]	[N]
3	107	220	1.5	13.29	**BS30-../DSE11SA4**	77	3600	-
3	84	280	1.3	16.92	**BS30-../DSE11SA4**	77	3950	-
3	68	345	1.1	20.94	**BS30-../DSE11SA4**	77	4300	-
3	60	355	1.05	24.06	**BS30-../DSE11SA4**	77	4600	-
3	53	445	0.9	27.07	**BS30-../DSE11SA4**	77	4750	-
3	46.5	460	0.87	30.63	**BS30-../DSE11SA4**	77	5000	-
3	109	220	2.8	13.03	**BS40-../DSE11SA4**	95	5800	-
3	84	285	2.4	16.92	**BS40-../DSE11SA4**	95	6400	-
3	68	345	2.1	21.06	**BS40-../DSE11SA4**	95	6900	-
3	61	345	2.0	23.59	**BS40-../DSE11SA4**	95	7900	-
3	55	425	1.75	26.18	**BS40-../DSE11SA4**	95	7500	-
3	46.5	455	1.65	30.63	**BS40-../DSE11SA4**	95	8700	-
3	43	530	1.45	33.35	**BS40-../DSE11SA4**	95	8300	-
3	37.5	550	1.4	38.13	**BS40-../DSE11SA4**	95	9400	-
3	35.5	630	1.25	40.37	**BS40-../DSE11SA4**	95	9000	-
3	30	740	1.1	47.69	**BS40-../DSE11SA4**	95	9600	-
3	24	840	1.0	60.38	**BS40-../DSE11SA4**	95	11200	-
3	19.5	1020	0.86	73.09	**BS40-../DSE11SA4**	95	12100	-

4 kW

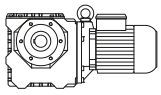

P_N	50 Hz			i	Type	m		
	n_2	M_2	f_B					
[kW]	[1/min]	[Nm]	[—]	[:1]		[kg]	[N]	[N]
4	107	295	1.15	13.29	**BS30-../DSE11MA4**	77	3600	-
4	84	375	0.96	16.92	**BS30-../DSE11MA4**	77	3950	-
4	68	465	0.82	20.94	**BS30-../DSE11MA4**	77	4300	-
4	109	295	2.1	13.03	**BS40-../DSE11MA4**	95	5800	-
4	84	385	1.75	16.92	**BS40-../DSE11MA4**	95	6400	-
4	68	460	1.55	21.06	**BS40-../DSE11MA4**	95	6900	-
4	61	460	1.5	23.59	**BS40-../DSE11MA4**	95	7900	-
4	55	560	1.3	26.18	**BS40-../DSE11MA4**	95	7500	-
4	46.5	600	1.25	30.63	**BS40-../DSE11MA4**	95	8700	-
4	43	710	1.1	33.35	**BS40-../DSE11MA4**	95	8300	-
4	37.5	740	1.05	38.13	**BS40-../DSE11MA4**	95	9400	-
4	35.5	850	0.94	40.37	**BS40-../DSE11MA4**	95	9000	-
4	30	990	0.84	47.69	**BS40-../DSE11MA4**	95	9600	-

5.5 kW

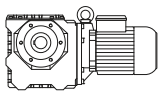

P_N	50 Hz			i	Type	m		
	n_2	M_2	f_B					
[kW]	[1/min]	[Nm]	[—]	[:1]		[kg]	[N]	[N]
5.5	107	405	0.82	13.29	**BS30-../DSE11LA4**	89	3600	-
5.5	109	405	1.5	13.03	**BS40-../DSE11LA4**	107	5800	-

The torques marked (*) are maximum permissible torques for service factor f_B=1.0.

5.5 kW

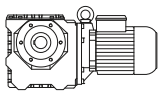

P_N	50 Hz			i	**Type**	m		
	n_2	M_2	f_B					
[kW]	[1/min]	[Nm]	[—]	[:1]		[kg]	[N]	[N]
5.5	84	530	1.25	16.92	**BS40-../DSE11LA4**	107	6400	-
5.5	68	630	1.15	21.06	**BS40-../DSE11LA4**	107	6900	-
5.5	61	630	1.1	23.59	**BS40-../DSE11LA4**	107	7900	-
5.5	55	780	0.95	26.18	**BS40-../DSE11LA4**	107	7500	-
5.5	46.5	830	0.9	30.63	**BS40-../DSE11LA4**	107	8700	-
5.5	43	970	0.8	33.35	**BS40-../DSE11LA4**	107	8300	-

The torques marked (*) are maximum permissible torques for service factor f_B=1.0.

0.03 kW

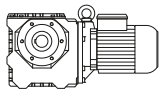

P_N	50 Hz			i	Type	m		
	n_2	M_2	f_B					
[kW]	[1/min]	[Nm]	[—]	[:1]		[kg]	[N]	[N]
0.03	75	2.8	8.9	18.00	**BS02-../D04LA4**	3.5	1250	-
0.03	62	3.2	7.8	22.00	**BS02-../D04LA4**	3.5	1250	-
0.03	50	3.6	6.9	27.00	**BS02-../D04LA4**	3.5	1250	-
0.03	41	4.15	6.0	33.00	**BS02-../D04LA4**	3.5	1250	-
0.03	31.5	5.6	4.3	43.00	**BS02-../D04LA4**	3.5	1250	-
0.03	25	6.5	3.4	54.00	**BS02-../D04LA4**	3.5	1250	-
0.03	19.5	7.4	2.7	70.00	**BS02-../D04LA4**	3.5	1250	-
0.03	14.5	11.6	3.3	93.92	**BS04-../D04LA4**	3.9	2250	-
0.03	13.5	13.5	2.8	102.9	**BS04-../D04LA4**	3.9	2250	-
0.03	12	13.6	2.8	117.0	**BS04-../D04LA4**	3.9	2250	-
0.03	11	16.4	2.5	123.0	**BS04-../D04LA4**	3.9	2250	-
0.03	9.8	18.1	2.3	138.4	**BS04-../D04LA4**	3.9	2250	-
0.03	9.0	17.5	2.2	150.3	**BS04-../D04LA4**	3.9	2250	-
0.03	8.5	20.5	1.8	160.1	**BS04-../D04LA4**	3.9	2250	-
0.03	7.8	19.8	2.0	174.0	**BS04-../D04LA4**	3.9	2250	-
0.03	6.2	24	1.65	220.0	**BS04-../D04LA4**	3.9	2250	-
0.03	5.4	27.5	1.5	251.6	**BS04-../D04LA4**	3.9	2250	-
0.03	4.5	32	1.35	300.7	**BS04-../D04LA4**	3.9	2250	-
0.03	4.0	35.5	1.25	338.3	**BS04-../D04LA4**	3.9	2250	-
0.03	3.5	40	1.15	391.3	**BS04-../D04LA4**	3.9	2250	-
0.03	3.6	56	1.7	381.5	**BS06G04-../D04LA4**	11	3500	-
0.03	2.9	70	1.35	474.8	**BS06G04-../D04LA4**	11	3500	-
0.03	2.5	79	1.25	552.6	**BS06G04-../D04LA4**	11	3500	-
0.03	2.3	88	1.05	610.7	**BS06G04-../D04LA4**	11	3500	-
0.03	2.0	101	0.93	704.7	**BS06G04-../D04LA4**	11	3500	-
0.03	1.6	94*	1.0	847.0	**BS06G04-../D04LA4**	11	3500	-
0.03	1.5	94*	1.0	939.6	**BS06G04-../D04LA4**	11	3500	-
0.03	1.2	94*	1.0	1170	**BS06G04-../D04LA4**	11	3500	-
0.03	0.9	94*	1.0	1503	**BS06G04-../D04LA4**	11	3500	-
0.03	0.85	94*	1.0	1654	**BS06G04-../D04LA4**	11	3500	-
0.03	0.75	94*	1.0	1914	**BS06G04-../D04LA4**	11	3500	-
0.03	0.65	94*	1.0	2200	**BS06G04-../D04LA4**	11	3500	-
0.03	0.49	94*	1.0	2768	**BS06G04-../D04LA4**	11	3500	-
0.03	0.45	94*	1.0	3007	**BS06G04-../D04LA4**	11	3500	-
0.03	0.41	94*	1.0	3308	**BS06G04-../D04LA4**	11	3500	-
0.03	0.37	94*	1.0	3721	**BS06G04-../D04LA4**	11	3500	-
0.03	0.32	94*	1.0	4304	**BS06G04-../D04LA4**	11	3500	-
0.03	0.28	98*	1.0	4947	**BS06G04-../D04LA4**	11	3500	-
0.03	0.25	98*	1.0	5442	**BS06G04-../D04LA4**	11	3500	-
0.03	0.22	100*	1.0	6234	**BS06G04-../D04LA4**	11	3500	-
0.03	5.4	30.5	3.2	252.0	**BS06-../D04LA4**	8.4	3500	-
0.03	4.3	37.5	2.8	315.3	**BS06-../D04LA4**	8.4	3500	-
0.03	3.8	42	2.6	358.9	**BS06-../D04LA4**	8.4	3500	-
0.03	3.3	47.5	2.3	418.0	**BS06-../D04LA4**	8.4	3500	-
0.03	2.5	67	2.8	544.8	**BS10Z-../D04LA4**	21	6000	-
0.03	2.2	72	2.6	638.7	**BS10Z-../D04LA4**	21	6000	-
0.03	1.8	85	2.1	788.7	**BS10Z-../D04LA4**	21	6000	-
0.03	1.5	101	1.55	905.6	**BS10Z-../D04LA4**	21	6000	-
0.03	1.4	130	1.25	969.9	**BS10G06-../D04LA4**	25	6000	-
0.03	1.2	152	1.05	1166	**BS10G06-../D04LA4**	25	6000	-
0.03	1.1	166	0.96	1342	**BS10G06-../D04LA4**	25	6000	-
0.03	0.9	160*	1.0	1528	**BS10G06-../D04LA4**	25	6000	-
0.03	0.85	160*	1.0	1668	**BS10G06-../D04LA4**	25	6000	-
0.03	0.7	160*	1.0	1963	**BS10G06-../D04LA4**	25	6000	-
0.03	0.6	160*	1.0	2348	**BS10G06-../D04LA4**	25	6000	-
0.03	0.55	160*	1.0	2635	**BS10G06-../D04LA4**	25	6000	-
0.03	0.47	160*	1.0	2875	**BS10G06-../D04LA4**	25	6000	-
0.03	0.41	160*	1.0	3332	**BS10G06-../D04LA4**	25	6000	-
0.03	0.38	160*	1.0	3635	**BS10G06-../D04LA4**	25	6000	-
0.03	0.33	160*	1.0	4163	**BS10G06-../D04LA4**	25	6000	-
0.03	0.29	160*	1.0	4776	**BS10G06-../D04LA4**	25	6000	-
0.03	0.26	160*	1.0	5209	**BS10G06-../D04LA4**	25	6000	-
0.03	0.23	164*	1.0	6019	**BS10G06-../D04LA4**	25	6000	-
0.03	0.21	164*	1.0	6565	**BS10G06-../D04LA4**	25	6000	-
0.03	0.19	164*	1.0	7471	**BS10G06-../D04LA4**	25	6000	-
0.03	0.16	164*	1.0	8703	**BS10G06-../D04LA4**	25	6000	-

The torques marked (*) are maximum permissible torques for service factor f_B=1.0.

0.03 kW

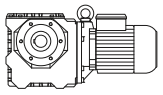

P_N	50 Hz			i	**Type**	m		
	n_2	M_2	f_B					
[kW]	[1/min]	[Nm]	[—]	[:1]		[kg]	[N]	[N]
0.03	1.7	111	2.4	831.7	**BS20G06-../D04LA4**	35	8000	-
0.03	1.4	135	2.0	1000	**BS20G06-../D04LA4**	35	8000	-
0.03	1.1	171	1.6	1311	**BS20G06-../D04LA4**	35	8000	-
0.03	0.9	210	1.3	1543	**BS20G06-../D04LA4**	35	8000	-
0.03	0.85	220	1.25	1683	**BS20G06-../D04LA4**	35	8000	-
0.03	0.7	270*	1.0	2014	**BS20G06-../D04LA4**	35	8000	-
0.03	0.55	270*	1.0	2465	**BS20G06-../D04LA4**	35	8000	-
0.03	0.48	270*	1.0	2857	**BS20G06-../D04LA4**	35	8000	-
0.03	0.44	270*	1.0	3117	**BS20G06-../D04LA4**	35	8000	-
0.03	0.38	270*	1.0	3570	**BS20G06-../D04LA4**	35	8000	-
0.03	0.33	270*	1.0	4096	**BS20G06-../D04LA4**	35	8000	-
0.03	0.28	270*	1.0	4910	**BS20G06-../D04LA4**	35	8000	-
0.03	0.23	270*	1.0	5880	**BS20G06-../D04LA4**	35	8000	-
0.03	0.19	275*	1.0	7363	**BS20G06-../D04LA4**	35	8000	-
0.03	0.17	275*	1.0	8031	**BS20G06-../D04LA4**	35	8000	-
0.03	0.15	280*	1.0	9220	**BS20G06-../D04LA4**	35	8000	-
0.03	1.2	164	3.0	1176	**BS30G06-../D04LA4**	53	10000	-
0.03	0.95	205	2.4	1461	**BS30G06-../D04LA4**	53	10000	-
0.03	0.9	215	2.3	1576	**BS30G06-../D04LA4**	53	10000	-
0.03	0.75	260	1.9	1886	**BS30G06-../D04LA4**	53	10000	-
0.03	0.6	325	1.5	2308	**BS30G06-../D04LA4**	53	10000	-
0.03	0.55	355	1.4	2518	**BS30G06-../D04LA4**	53	10000	-
0.03	0.47	420	1.15	2919	**BS30G06-../D04LA4**	53	10000	-
0.03	0.41	480	1.0	3344	**BS30G06-../D04LA4**	53	10000	-
0.03	0.38	490*	1.0	3647	**BS30G06-../D04LA4**	53	10000	-
0.03	0.33	490*	1.0	4184	**BS30G06-../D04LA4**	53	10000	-
0.03	0.28	510*	1.0	4905	**BS30G06-../D04LA4**	53	10000	-
0.03	0.24	520*	1.0	5783	**BS30G06-../D04LA4**	53	10000	-
0.03	0.22	520*	1.0	6308	**BS30G06-../D04LA4**	53	10000	-
0.03	0.19	520*	1.0	7179	**BS30G06-../D04LA4**	53	10000	-
0.03	0.17	520*	1.0	8362	**BS30G06-../D04LA4**	53	10000	-

0.04 kW

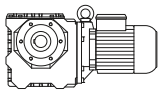

P_N	50 Hz			i	**Type**	m		
	n_2	M_2	f_B					
[kW]	[1/min]	[Nm]	[—]	[:1]		[kg]	[N]	[N]
0.04	127	2.45	10	10.67	**BS02-../D04LA4**	3.5	1250	-
0.04	100	2.95	8.5	13.50	**BS02-../D04LA4**	3.5	1250	-
0.04	75	3.75	6.7	18.00	**BS02-../D04LA4**	3.5	1250	-
0.04	62	4.3	5.8	22.00	**BS02-../D04LA4**	3.5	1250	-
0.04	50	4.8	5.2	27.00	**BS02-../D04LA4**	3.5	1250	-
0.04	41	5.5	4.5	33.00	**BS02-../D04LA4**	3.5	1250	-
0.04	31.5	7.5	3.2	43.00	**BS02-../D04LA4**	3.5	1250	-
0.04	25	8.7	2.5	54.00	**BS02-../D04LA4**	3.5	1250	-
0.04	19.5	9.9	2.0	70.00	**BS02-../D04LA4**	3.5	1250	-
0.04	21.5	11.1	3.2	64.06	**BS04-../D04LA4**	3.9	2250	-
0.04	19	13.2	2.9	71.18	**BS04-../D04LA4**	3.9	2250	-
0.04	18	12.9	2.9	77.00	**BS04-../D04LA4**	3.9	2250	-
0.04	14.5	15.5	2.5	93.92	**BS04-../D04LA4**	3.9	2250	-
0.04	13.5	18.1	2.1	102.9	**BS04-../D04LA4**	3.9	2250	-
0.04	12	18.1	2.1	117.0	**BS04-../D04LA4**	3.9	2250	-
0.04	11	21.5	1.9	123.0	**BS04-../D04LA4**	3.9	2250	-
0.04	9.8	24	1.75	138.4	**BS04-../D04LA4**	3.9	2250	-
0.04	9.0	23	1.7	150.3	**BS04-../D04LA4**	3.9	2250	-
0.04	8.5	27	1.35	160.1	**BS04-../D04LA4**	3.9	2250	-
0.04	7.8	26	1.55	174.0	**BS04-../D04LA4**	3.9	2250	-
0.04	6.2	32.5	1.25	220.0	**BS04-../D04LA4**	3.9	2250	-
0.04	5.4	36.5	1.1	251.6	**BS04-../D04LA4**	3.9	2250	-
0.04	4.5	43	1.0	300.7	**BS04-../D04LA4**	3.9	2250	-
0.04	4.0	47.5	0.93	338.3	**BS04-../D04LA4**	3.9	2250	-
0.04	3.5	53	0.85	391.3	**BS04-../D04LA4**	3.9	2250	-
0.04	3.6	75	1.25	381.5	**BS06G04-../D04LA4**	11	3500	-

The torques marked (*) are maximum permissible torques for service factor f_B=1.0.

0.04 kW

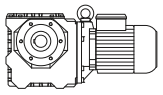

P_N	50 Hz			i	Type	m		
	n_2	M_2	f_B					
[kW]	[1/min]	[Nm]	[—]	[:1]		[kg]	[N]	[N]
0.04	2.9	93	1.0	474.8	**BS06G04-../D04LA4**	11	3500	-
0.04	2.5	105	0.95	552.6	**BS06G04-../D04LA4**	11	3500	-
0.04	2.3	117	0.8	610.7	**BS06G04-../D04LA4**	11	3500	-
0.04	7.9	30.5	2.9	171.0	**BS06-../D04LA4**	8.4	3500	-
0.04	6.2	36	2.7	220.0	**BS06-../D04LA4**	8.4	3500	-
0.04	5.4	41	2.4	252.0	**BS06-../D04LA4**	8.4	3500	-
0.04	4.3	50	2.1	315.3	**BS06-../D04LA4**	8.4	3500	-
0.04	3.8	56	1.95	358.9	**BS06-../D04LA4**	8.4	3500	-
0.04	3.3	63	1.75	418.0	**BS06-../D04LA4**	8.4	3500	-
0.04	3.8	62	3.1	360.3	**BS10Z-../D04LA4**	21	6000	-
0.04	3.2	72	2.6	432.4	**BS10Z-../D04LA4**	21	6000	-
0.04	2.5	90	2.1	544.8	**BS10Z-../D04LA4**	21	6000	-
0.04	2.2	97	1.95	638.7	**BS10Z-../D04LA4**	21	6000	-
0.04	1.8	114	1.6	788.7	**BS10Z-../D04LA4**	21	6000	-
0.04	1.5	134	1.2	905.6	**BS10Z-../D04LA4**	21	6000	-
0.04	1.4	174	0.92	969.9	**BS10G06-../D04LA4**	25	6000	-
0.04	1.2	200	0.8	1166	**BS10G06-../D04LA4**	25	6000	-
0.04	1.8	114	2.7	763.4	**BS20Z-../D04LA4**	32	8000	-
0.04	1.7	148	1.8	831.7	**BS20G06-../D04LA4**	35	8000	-
0.04	1.4	180	1.5	1000	**BS20G06-../D04LA4**	35	8000	-
0.04	1.1	225	1.2	1311	**BS20G06-../D04LA4**	35	8000	-
0.04	1.4	188	2.6	1022	**BS30G06-../D04LA4**	53	10000	-
0.04	1.2	215	2.3	1176	**BS30G06-../D04LA4**	53	10000	-
0.04	0.95	275	1.8	1461	**BS30G06-../D04LA4**	53	10000	-
0.04	0.9	290	1.7	1576	**BS30G06-../D04LA4**	53	10000	-
0.04	0.75	350	1.4	1886	**BS30G06-../D04LA4**	53	10000	-
0.04	0.6	435	1.15	2308	**BS30G06-../D04LA4**	53	10000	-
0.04	0.55	475	1.05	2518	**BS30G06-../D04LA4**	53	10000	-

0.06 kW

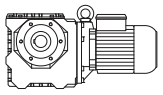

P_N	50 Hz			i	Type	m		
	n_2	M_2	f_B					
[kW]	[1/min]	[Nm]	[—]	[:1]		[kg]	[N]	[N]
0.06	295	1.7	8.8	4.60	**BS02-../D04LA4**	3.5	1000	-
0.06	250	2.0	10	5.40	**BS02-../D04LA4**	3.5	1000	-
0.06	200	2.45	10	6.75	**BS02-../D04LA4**	3.5	1000	-
0.06	164	2.9	8.6	8.25	**BS02-../D04LA4**	3.5	1100	-
0.06	127	3.65	6.8	10.67	**BS02-../D04LA4**	3.5	1250	-
0.06	100	4.45	5.6	13.50	**BS02-../D04LA4**	3.5	1250	-
0.06	75	5.6	4.5	18.00	**BS02-../D04LA4**	3.5	1250	-
0.06	62	6.4	3.9	22.00	**BS02-../D04LA4**	3.5	1250	-
0.06	50	7.2	3.5	27.00	**BS02-../D04LA4**	3.5	1250	-
0.06	41	8.3	3.0	33.00	**BS02-../D04LA4**	3.5	1250	-
0.06	31.5	11.2	2.1	43.00	**BS02-../D04LA4**	3.5	1250	-
0.06	25	13	1.7	54.00	**BS02-../D04LA4**	3.5	1250	-
0.06	19.5	14.9	1.35	70.00	**BS02-../D04LA4**	3.5	1250	-
0.06	18	16.2	2.5	75.00	**BS03-../D05LA4**	5.4	1950	-
0.06	35.5	11.1	3.3	38.42	**BS04-../D04LA4**	3.9	2250	-
0.06	28.5	13.6	2.8	47.86	**BS04-../D04LA4**	3.9	2250	-
0.06	21.5	16.7	2.2	64.06	**BS04-../D04LA4**	3.9	2250	-
0.06	19	19.9	1.9	71.18	**BS04-../D04LA4**	3.9	2250	-
0.06	18	19.4	1.95	77.00	**BS04-../D04LA4**	3.9	2250	-
0.06	14.5	23	1.65	93.92	**BS04-../D04LA4**	3.9	2250	-
0.06	13.5	27	1.4	102.9	**BS04-../D04LA4**	3.9	2250	-
0.06	12	27	1.4	117.0	**BS04-../D04LA4**	3.9	2250	-
0.06	11	32.5	1.25	123.0	**BS04-../D04LA4**	3.9	2250	-
0.06	9.8	36	1.15	138.4	**BS04-../D04LA4**	3.9	2250	-
0.06	9.0	35	1.1	150.3	**BS04-../D04LA4**	3.9	2250	-
0.06	8.5	41	0.9	160.1	**BS04-../D04LA4**	3.9	2250	-

The torques marked (*) are maximum permissible torques for service factor f_B=1.0.

0.06 kW

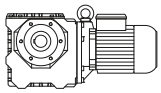

P_N	50 Hz			i	Type	m		
	n_2	M_2	f_B					
[kW]	[1/min]	[Nm]	[—]	[:1]		[kg]	[N]	[N]
0.06	7.8	39.5	1.0	174.0	**BS04-../D04LA4**	3.9	2250	-
0.06	6.2	48.5	0.82	220.0	**BS04-../D04LA4**	3.9	2250	-
0.06	3.6	113	0.83	381.5	**BS06G04-../D04LA4**	11	3500	-
0.06	11.5	32	2.9	118.8	**BS06-../D04LA4**	8.4	3500	-
0.06	10.5	36.5	2.8	129.0	**BS06-../D04LA4**	8.4	3500	-
0.06	9.2	40	2.7	146.8	**BS06-../D04LA4**	8.4	3500	-
0.06	7.8	44	2.2	174.0	**BS06-../D04LA4**	8.4	3500	-
0.06	6.2	54	1.8	220.0	**BS06-../D04LA4**	8.4	3500	-
0.06	5.4	61	1.6	252.0	**BS06-../D04LA4**	8.4	3500	-
0.06	4.3	75	1.4	315.3	**BS06-../D04LA4**	8.4	3500	-
0.06	3.8	84	1.3	358.9	**BS06-../D04LA4**	8.4	3500	-
0.06	3.3	95	1.15	418.0	**BS06-../D04LA4**	8.4	3500	-
0.06	11.5	36.5	3.3	119.6	**BS10-../D06LA4**	23	6000	-
0.06	6.3	58	3.1	216.6	**BS10-../D06LA4**	23	6000	-
0.06	5.4	67	2.7	254.0	**BS10Z-../D06LA4**	24	6000	-
0.06	4.5	78	2.4	302.5	**BS10Z-../D06LA4**	24	6000	-
0.06	3.8	93	2.0	360.3	**BS10Z-../D06LA4**	24	6000	-
0.06	3.2	109	1.75	432.4	**BS10Z-../D06LA4**	24	6000	-
0.06	2.5	135	1.4	544.8	**BS10Z-../D06LA4**	24	6000	-
0.06	2.2	145	1.3	638.7	**BS10Z-../D06LA4**	24	6000	-
0.06	1.8	171	1.05	788.7	**BS10Z-../D06LA4**	24	6000	-
0.06	3.2	109	3.0	430.8	**BS20Z-../D06LA4**	35	8000	-
0.06	2.6	121	3.0	539.7	**BS20Z-../D06LA4**	35	8000	-
0.06	2.2	140	2.4	619.2	**BS20Z-../D06LA4**	35	8000	-
0.06	1.8	171	1.8	763.4	**BS20Z-../D06LA4**	35	8000	-
0.06	1.7	220	1.25	831.7	**BS20G06-../D06LA4**	38	8000	-
0.06	1.4	270	1.0	1000	**BS20G06-../D06LA4**	38	8000	-
0.06	1.7	195	2.4	804.1	**BS30Z-../D06LA4**	54	10000	-
0.06	1.5	215	2.1	932.0	**BS30Z-../D06LA4**	54	10000	-
0.06	1.4	280	1.75	1022	**BS30G06-../D06LA4**	56	10000	-
0.06	1.2	325	1.5	1176	**BS30G06-../D06LA4**	56	10000	-
0.06	0.95	415	1.2	1461	**BS30G06-../D06LA4**	56	10000	-
0.06	0.9	435	1.15	1576	**BS30G06-../D06LA4**	56	10000	-
0.06	1.5	225	3.3	908.2	**BS40Z-../D06LA4**	68	15000	-
0.06	1.4	285	3.1	965.5	**BS40G10-../D06LA4**	73	15000	-
0.06	1.2	330	2.7	1180	**BS40G10-../D06LA4**	73	15000	-
0.06	0.95	420	2.1	1499	**BS40G10-../D06LA4**	73	15000	-
0.06	0.8	500	1.75	1785	**BS40G10-../D06LA4**	73	15000	-
0.06	0.65	610	1.45	2126	**BS40G10-../D06LA4**	73	15000	-
0.06	0.6	660	1.35	2304	**BS40G10-../D06LA4**	73	15000	-
0.06	0.55	720	1.2	2552	**BS40G10-../D06LA4**	73	15000	-
0.06	0.47	850	1.05	2902	**BS40G10-../D06LA4**	73	15000	-

0.09 kW

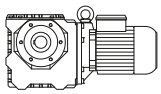

P_N	50 Hz			i	Type	m		
	n_2	M_2	f_B					
[kW]	[1/min]	[Nm]	[—]	[:1]		[kg]	[N]	[N]
0.09	295	2.55	5.9	4.60	**BS02-../D04LA4**	3.5	1000	-
0.09	250	3.0	6.7	5.40	**BS02-../D04LA4**	3.5	1000	-
0.09	200	3.65	6.8	6.75	**BS02-../D04LA4**	3.5	1000	-
0.09	164	4.4	5.7	8.25	**BS02-../D04LA4**	3.5	1100	-
0.09	127	5.5	4.5	10.67	**BS02-../D04LA4**	3.5	1250	-
0.09	100	6.7	3.7	13.50	**BS02-../D04LA4**	3.5	1250	-
0.09	75	8.4	3.0	18.00	**BS02-../D04LA4**	3.5	1250	-
0.09	62	9.7	2.6	22.00	**BS02-../D04LA4**	3.5	1250	-
0.09	50	10.8	2.3	27.00	**BS02-../D04LA4**	3.5	1250	-
0.09	41	12.5	2.0	33.00	**BS02-../D04LA4**	3.5	1250	-
0.09	31.5	16.9	1.4	43.00	**BS02-../D04LA4**	3.5	1250	-
0.09	25	19.5	1.15	54.00	**BS02-../D04LA4**	3.5	1250	-

The torques marked (*) are maximum permissible torques for service factor f_B=1.0.

0.09 kW

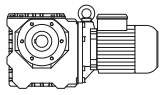

P_N	50 Hz			i	Type	m		
	n_2	M_2	f_B					
[kW]	[1/min]	[Nm]	[—]	[:1]		[kg]	[N]	[N]
0.09	19.5	22	0.91	70.00	**BS02-../D04LA4**	3.5	1250	-
0.09	27	18.4	3.0	50.00	**BS03-../D05LA4**	5.4	1950	-
0.09	22	20.5	2.3	62.00	**BS03-../D05LA4**	5.4	1950	-
0.09	18	24	1.65	75.00	**BS03-../D05LA4**	5.4	1950	-
0.09	56	11.6	2.9	24.25	**BS04-../D04LA4**	3.9	2250	-
0.09	52	11.7	3.2	26.21	**BS04-../D04LA4**	3.9	2250	-
0.09	43	13.9	2.7	31.50	**BS04-../D04LA4**	3.9	2250	-
0.09	35.5	16.7	2.2	38.42	**BS04-../D04LA4**	3.9	2250	-
0.09	28.5	20.5	1.85	47.86	**BS04-../D04LA4**	3.9	2250	-
0.09	21.5	25	1.45	64.06	**BS04-../D04LA4**	3.9	2250	-
0.09	19	29.5	1.3	71.18	**BS04-../D04LA4**	3.9	2250	-
0.09	18	29	1.3	77.00	**BS04-../D04LA4**	3.9	2250	-
0.09	14.5	34.5	1.1	93.92	**BS04-../D04LA4**	3.9	2250	-
0.09	13.5	40.5	0.94	102.9	**BS04-../D04LA4**	3.9	2250	-
0.09	12	40.5	0.94	117.0	**BS04-../D04LA4**	3.9	2250	-
0.09	11	49	0.84	123.0	**BS04-../D04LA4**	3.9	2250	-
0.09	21.5	27	3.0	64.06	**BS06-../D04LA4**	8.4	3500	-
0.09	19	32	2.9	71.18	**BS06-../D04LA4**	8.4	3500	-
0.09	18	31.5	2.7	77.00	**BS06-../D04LA4**	8.4	3500	-
0.09	15	40	2.5	90.00	**BS06-../D04LA4**	8.4	3500	-
0.09	13.5	43.5	2.3	103.1	**BS06-../D04LA4**	8.4	3500	-
0.09	11.5	48.5	1.95	118.8	**BS06-../D04LA4**	8.4	3500	-
0.09	10.5	54	1.95	129.0	**BS06-../D04LA4**	8.4	3500	-
0.09	9.2	60	1.75	146.8	**BS06-../D04LA4**	8.4	3500	-
0.09	7.8	66	1.5	174.0	**BS06-../D04LA4**	8.4	3500	-
0.09	6.2	81	1.2	220.0	**BS06-../D04LA4**	8.4	3500	-
0.09	5.4	92	1.1	252.0	**BS06-../D04LA4**	8.4	3500	-
0.09	4.3	113	0.94	315.3	**BS06-../D04LA4**	8.4	3500	-
0.09	3.8	126	0.87	358.9	**BS06-../D04LA4**	8.4	3500	-
0.09	11.5	55	2.2	119.6	**BS10-../D06LA4**	23	6000	-
0.09	10.5	52	3.2	130.3	**BS10-../D06LA4**	23	6000	-
0.09	8.9	61	2.7	152.7	**BS10-../D06LA4**	23	6000	-
0.09	7.2	76	2.2	188.6	**BS10-../D06LA4**	23	6000	-
0.09	6.3	87	2.1	216.6	**BS10-../D06LA4**	23	6000	-
0.09	5.4	101	1.8	254.0	**BS10Z-../D06LA4**	24	6000	-
0.09	4.5	118	1.6	302.5	**BS10Z-../D06LA4**	24	6000	-
0.09	3.8	140	1.35	360.3	**BS10Z-../D06LA4**	24	6000	-
0.09	3.2	163	1.15	432.4	**BS10Z-../D06LA4**	24	6000	-
0.09	2.5	200	0.95	544.8	**BS10Z-../D06LA4**	24	6000	-
0.09	2.2	215	0.88	638.7	**BS10Z-../D06LA4**	24	6000	-
0.09	6.0	91	3.2	225.6	**BS20-../D06LA4**	34	8000	-
0.09	5.3	103	2.9	257.8	**BS20Z-../D06LA4**	35	8000	-
0.09	4.5	120	2.5	300.1	**BS20Z-../D06LA4**	35	8000	-
0.09	3.8	140	2.3	359.9	**BS20Z-../D06LA4**	35	8000	-
0.09	3.2	163	2.0	430.8	**BS20Z-../D06LA4**	35	8000	-
0.09	2.6	181	2.0	539.7	**BS20Z-../D06LA4**	35	8000	-
0.09	2.2	210	1.55	619.2	**BS20Z-../D06LA4**	35	8000	-
0.09	1.8	255	1.2	763.4	**BS20Z-../D06LA4**	35	8000	-
0.09	1.7	330	0.82	831.7	**BS20G06-../D06LA4**	38	8000	-
0.09	3.8	167	2.4	359.6	**BS30Z-../D06LA4**	54	10000	-
0.09	3.0	183	3.3	457.3	**BS30Z-../D06LA4**	54	10000	-
0.09	2.6	210	2.9	539.3	**BS30Z-../D06LA4**	54	10000	-
0.09	2.1	245	2.4	651.0	**BS30Z-../D06LA4**	54	10000	-
0.09	1.7	290	1.65	804.1	**BS30Z-../D06LA4**	54	10000	-
0.09	1.5	325	1.4	932.0	**BS30Z-../D06LA4**	54	10000	-
0.09	1.4	420	1.15	1022	**BS30G06-../D06LA4**	56	10000	-
0.09	1.2	490	1.0	1176	**BS30G06-../D06LA4**	56	10000	-
0.09	1.9	270	2.8	736.5	**BS40Z-../D06LA4**	68	15000	-
0.09	1.5	335	2.2	908.2	**BS40Z-../D06LA4**	68	15000	-
0.09	1.4	425	2.1	965.5	**BS40G10-../D06LA4**	73	15000	-
0.09	1.2	500	1.75	1180	**BS40G10-../D06LA4**	73	15000	-
0.09	0.95	630	1.4	1499	**BS40G10-../D06LA4**	73	15000	-
0.09	0.8	750	1.15	1785	**BS40G10-../D06LA4**	73	15000	-

The torques marked (*) are maximum permissible torques for service factor f_B=1.0.

0.11 kW

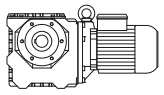

P_N	50 Hz			i	Type	m		
	n_2	M_2	f_B					
[kW]	[1/min]	[Nm]	[—]	[:1]		[kg]	[N]	[N]
0.11	295	3.1	4.8	4.60	**BS02-../D04LA4**	3.5	1000	-
0.11	250	3.65	5.5	5.40	**BS02-../D04LA4**	3.5	1000	-
0.11	200	4.5	5.6	6.75	**BS02-../D04LA4**	3.5	1000	-
0.11	164	5.3	4.7	8.25	**BS02-../D04LA4**	3.5	1100	-
0.11	127	6.7	3.7	10.67	**BS02-../D04LA4**	3.5	1250	-
0.11	100	8.1	3.1	13.50	**BS02-../D04LA4**	3.5	1250	-
0.11	75	10.3	2.4	18.00	**BS02-../D04LA4**	3.5	1250	-
0.11	62	11.8	2.1	22.00	**BS02-../D04LA4**	3.5	1250	-
0.11	50	13.2	1.9	27.00	**BS02-../D04LA4**	3.5	1250	-
0.11	41	15.3	1.65	33.00	**BS02-../D04LA4**	3.5	1250	-
0.11	31.5	20.5	1.15	43.00	**BS02-../D04LA4**	3.5	1250	-
0.11	25	23.5	0.94	54.00	**BS02-../D04LA4**	3.5	1250	-
0.11	65	12.2	3.0	20.96	**BS04-../D04LA4**	3.9	2100	-
0.11	56	14.2	2.4	24.25	**BS04-../D04LA4**	3.9	2250	-
0.11	52	14.3	2.7	26.21	**BS04-../D04LA4**	3.9	2250	-
0.11	43	17.1	2.2	31.50	**BS04-../D04LA4**	3.9	2250	-
0.11	35.5	20	1.85	38.42	**BS04-../D04LA4**	3.9	2250	-
0.11	28.5	25	1.5	47.86	**BS04-../D04LA4**	3.9	2250	-
0.11	21.5	30.5	1.2	64.06	**BS04-../D04LA4**	3.9	2250	-
0.11	19	36	1.05	71.18	**BS04-../D04LA4**	3.9	2250	-
0.11	18	35.5	1.05	77.00	**BS04-../D04LA4**	3.9	2250	-
0.11	14.5	42.5	0.89	93.92	**BS04-../D04LA4**	3.9	2250	-
0.11	3.6	94*	1.0	381.5	**BS06G04-../D04LA4**	11	3500	-
0.11	2.9	94*	1.0	474.8	**BS06G04-../D04LA4**	11	3500	-
0.11	2.5	100*	1.0	552.6	**BS06G04-../D04LA4**	11	3500	-
0.11	2.3	94*	1.0	610.7	**BS06G04-../D04LA4**	11	3500	-
0.11	2.0	94*	1.0	704.7	**BS06G04-../D04LA4**	11	3500	-
0.11	1.6	94*	1.0	847.0	**BS06G04-../D04LA4**	11	3500	-
0.11	1.5	94*	1.0	939.6	**BS06G04-../D04LA4**	11	3500	-
0.11	1.2	94*	1.0	1170	**BS06G04-../D04LA4**	11	3500	-
0.11	0.9	94*	1.0	1503	**BS06G04-../D04LA4**	11	3500	-
0.11	0.85	94*	1.0	1654	**BS06G04-../D04LA4**	11	3500	-
0.11	0.75	94*	1.0	1914	**BS06G04-../D04LA4**	11	3500	-
0.11	0.65	94*	1.0	2200	**BS06G04-../D04LA4**	11	3500	-
0.11	0.49	94*	1.0	2768	**BS06G04-../D04LA4**	11	3500	-
0.11	0.45	94*	1.0	3007	**BS06G04-../D04LA4**	11	3500	-
0.11	0.41	94*	1.0	3308	**BS06G04-../D04LA4**	11	3500	-
0.11	0.37	94*	1.0	3721	**BS06G04-../D04LA4**	11	3500	-
0.11	0.32	94*	1.0	4304	**BS06G04-../D04LA4**	11	3500	-
0.11	0.28	98*	1.0	4947	**BS06G04-../D04LA4**	11	3500	-
0.11	0.25	98*	1.0	5442	**BS06G04-../D04LA4**	11	3500	-
0.11	0.22	100*	1.0	6234	**BS06G04-../D04LA4**	11	3500	-
0.11	28	27	3.3	48.60	**BS06-../D04LA4**	8.4	3500	-
0.11	23.5	31.5	2.9	58.15	**BS06-../D04LA4**	8.4	3500	-
0.11	21.5	33	2.4	64.06	**BS06-../D04LA4**	8.4	3500	-
0.11	19	39	2.4	71.18	**BS06-../D04LA4**	8.4	3500	-
0.11	18	39	2.2	77.00	**BS06-../D04LA4**	8.4	3500	-
0.11	15	49	2.0	90.00	**BS06-../D04LA4**	8.4	3500	-
0.11	13.5	53	1.9	103.1	**BS06-../D04LA4**	8.4	3500	-
0.11	11.5	59	1.6	118.8	**BS06-../D04LA4**	8.4	3500	-
0.11	10.5	67	1.55	129.0	**BS06-../D04LA4**	8.4	3500	-
0.11	9.2	74	1.45	146.8	**BS06-../D04LA4**	8.4	3500	-
0.11	7.8	80	1.25	174.0	**BS06-../D04LA4**	8.4	3500	-
0.11	6.2	99	0.99	220.0	**BS06-../D04LA4**	8.4	3500	-
0.11	5.4	112	0.88	252.0	**BS06-../D04LA4**	8.4	3500	-
0.11	6.8	98	1.5	200.0	**BS10Z-../D04LA4**	21	6000	-
0.11	5.4	124	1.45	254.0	**BS10Z-../D04LA4**	21	6000	-
0.11	4.5	144	1.3	302.5	**BS10Z-../D04LA4**	21	6000	-
0.11	3.8	171	1.1	360.3	**BS10Z-../D04LA4**	21	6000	-
0.11	3.2	200	0.95	432.4	**BS10Z-../D04LA4**	21	6000	-
0.11	1.4	160*	1.0	969.9	**BS10G06-../D04LA4**	25	6000	-
0.11	1.2	160*	1.0	1166	**BS10G06-../D04LA4**	25	6000	-
0.11	1.1	160*	1.0	1342	**BS10G06-../D04LA4**	25	6000	-
0.11	0.9	160*	1.0	1528	**BS10G06-../D04LA4**	25	6000	-
0.11	0.85	160*	1.0	1668	**BS10G06-../D04LA4**	25	6000	-
0.11	0.7	160*	1.0	1963	**BS10G06-../D04LA4**	25	6000	-

The torques marked (*) are maximum permissible torques for service factor f_B=1.0.

0.11 kW

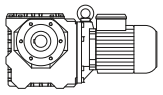

P_N	50 Hz			i	Type	m		
	n_2	M_2	f_B					
[kW]	[1/min]	[Nm]	[—]	[:1]		[kg]	[N]	[N]
0.11	0.6	160*	1.0	2348	**BS10G06-../D04LA4**	25	6000	-
0.11	0.55	160*	1.0	2635	**BS10G06-../D04LA4**	25	6000	-
0.11	0.47	160*	1.0	2875	**BS10G06-../D04LA4**	25	6000	-
0.11	0.41	160*	1.0	3332	**BS10G06-../D04LA4**	25	6000	-
0.11	0.38	160*	1.0	3635	**BS10G06-../D04LA4**	25	6000	-
0.11	0.33	160*	1.0	4163	**BS10G06-../D04LA4**	25	6000	-
0.11	0.29	160*	1.0	4776	**BS10G06-../D04LA4**	25	6000	-
0.11	0.26	160*	1.0	5209	**BS10G06-../D04LA4**	25	6000	-
0.11	0.23	164*	1.0	6019	**BS10G06-../D04LA4**	25	6000	-
0.11	0.21	164*	1.0	6565	**BS10G06-../D04LA4**	25	6000	-
0.11	0.19	164*	1.0	7471	**BS10G06-../D04LA4**	25	6000	-
0.11	0.16	164*	1.0	8703	**BS10G06-../D04LA4**	25	6000	-
0.11	6.8	98	2.9	201.4	**BS20Z-../D04LA4**	32	8000	-
0.11	5.3	126	2.3	257.8	**BS20Z-../D04LA4**	32	8000	-
0.11	4.5	147	2.0	300.1	**BS20Z-../D04LA4**	32	8000	-
0.11	3.8	171	1.85	359.9	**BS20Z-../D04LA4**	32	8000	-
0.11	3.2	200	1.65	430.8	**BS20Z-../D04LA4**	32	8000	-
0.11	2.6	220	1.65	539.7	**BS20Z-../D04LA4**	32	8000	-
0.11	2.2	255	1.3	619.2	**BS20Z-../D04LA4**	32	8000	-
0.11	1.8	315	0.98	763.4	**BS20Z-../D04LA4**	32	8000	-
0.11	1.7	270*	1.0	831.7	**BS20G06-../D04LA4**	35	8000	-
0.11	1.4	270*	1.0	1000	**BS20G06-../D04LA4**	35	8000	-
0.11	1.1	270*	1.0	1311	**BS20G06-../D04LA4**	35	8000	-
0.11	0.9	270*	1.0	1543	**BS20G06-../D04LA4**	35	8000	-
0.11	0.85	270*	1.0	1683	**BS20G06-../D04LA4**	35	8000	-
0.11	0.7	270*	1.0	2014	**BS20G06-../D04LA4**	35	8000	-
0.11	0.55	270*	1.0	2465	**BS20G06-../D04LA4**	35	8000	-
0.11	0.48	270*	1.0	2857	**BS20G06-../D04LA4**	35	8000	-
0.11	0.44	270*	1.0	3117	**BS20G06-../D04LA4**	35	8000	-
0.11	0.38	270*	1.0	3570	**BS20G06-../D04LA4**	35	8000	-
0.11	0.33	270*	1.0	4096	**BS20G06-../D04LA4**	35	8000	-
0.11	0.28	270*	1.0	4910	**BS20G06-../D04LA4**	35	8000	-
0.11	0.23	270*	1.0	5880	**BS20G06-../D04LA4**	35	8000	-
0.11	0.19	275*	1.0	7363	**BS20G06-../D04LA4**	35	8000	-
0.11	0.17	275*	1.0	8031	**BS20G06-../D04LA4**	35	8000	-
0.11	0.15	280*	1.0	9220	**BS20G06-../D04LA4**	35	8000	-
0.11	1.4	510	0.96	1022	**BS30G06-../D04LA4**	53	10000	-
0.11	1.2	600	0.82	1176	**BS30G06-../D04LA4**	53	10000	-
0.11	0.95	490*	1.0	1461	**BS30G06-../D04LA4**	53	10000	-
0.11	0.9	490*	1.0	1576	**BS30G06-../D04LA4**	53	10000	-
0.11	0.75	490*	1.0	1886	**BS30G06-../D04LA4**	53	10000	-
0.11	0.6	490*	1.0	2308	**BS30G06-../D04LA4**	53	10000	-
0.11	0.55	490*	1.0	2518	**BS30G06-../D04LA4**	53	10000	-
0.11	0.47	490*	1.0	2919	**BS30G06-../D04LA4**	53	10000	-
0.11	0.41	490*	1.0	3344	**BS30G06-../D04LA4**	53	10000	-
0.11	0.38	490*	1.0	3647	**BS30G06-../D04LA4**	53	10000	-
0.11	0.33	490*	1.0	4184	**BS30G06-../D04LA4**	53	10000	-
0.11	0.28	510*	1.0	4905	**BS30G06-../D04LA4**	53	10000	-
0.11	0.24	520*	1.0	5783	**BS30G06-../D04LA4**	53	10000	-
0.11	0.22	520*	1.0	6308	**BS30G06-../D04LA4**	53	10000	-
0.11	0.19	520*	1.0	7179	**BS30G06-../D04LA4**	53	10000	-
0.11	0.17	520*	1.0	8362	**BS30G06-../D04LA4**	53	10000	-

0.12 kW

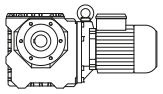

P_N	50 Hz			i	Type	m		
	n_2	M_2	f_B					
[kW]	[1/min]	[Nm]	[—]	[:1]		[kg]	[N]	[N]
0.12	305	3.3	4.5	4.60	**BS02-../DHE05LA4**	5.3	1000	-
0.12	260	3.85	5.2	5.40	**BS02-../DHE05LA4**	5.3	1000	-
0.12	210	4.65	5.4	6.75	**BS02-../DHE05LA4**	5.3	1000	-
0.12	169	5.6	4.5	8.25	**BS02-../DHE05LA4**	5.3	1100	-
0.12	131	7.1	3.5	10.67	**BS02-../DHE05LA4**	5.3	1250	-
0.12	103	8.6	2.9	13.50	**BS02-../DHE05LA4**	5.3	1250	-

The torques marked (*) are maximum permissible torques for service factor f_B=1.0.

0.12 kW

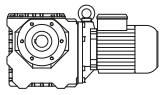

P_N	50 Hz			i	Type	m		
	n_2	M_2	f_B					
[kW]	[1/min]	[Nm]	[—]	[:1]		[kg]	[N]	[N]
0.12	78	10.8	2.3	18.00	**BS02-../DHE05LA4**	5.3	1250	-
0.12	64	12.5	2.0	22.00	**BS02-../DHE05LA4**	5.3	1250	-
0.12	52	13.8	1.8	27.00	**BS02-../DHE05LA4**	5.3	1250	-
0.12	42.5	16.1	1.55	33.00	**BS02-../DHE05LA4**	5.3	1250	-
0.12	32.5	21.5	1.1	43.00	**BS02-../DHE05LA4**	5.3	1250	-
0.12	26	25	0.88	54.00	**BS02-../DHE05LA4**	5.3	1250	-
0.12	36	20	2.8	39.00	**BS03-../DHE05LA4**	5.4	1950	-
0.12	28	23.5	2.3	50.00	**BS03-../DHE05LA4**	5.4	1950	-
0.12	22.5	26.5	1.8	62.00	**BS03-../DHE05LA4**	5.4	1950	-
0.12	19	30.5	1.3	75.00	**BS03-../DHE05LA4**	5.4	1950	-
0.12	78	10.4	3.3	18.00	**BS04-../DHE05LA4**	5.8	1950	-
0.12	67	12.9	2.9	20.96	**BS04-../DHE05LA4**	5.8	2100	-
0.12	58	15	2.3	24.25	**BS04-../DHE05LA4**	5.8	2250	-
0.12	54	15	2.5	26.21	**BS04-../DHE05LA4**	5.8	2250	-
0.12	44.5	18	2.1	31.50	**BS04-../DHE05LA4**	5.8	2250	-
0.12	36.5	21.5	1.7	38.42	**BS04-../DHE05LA4**	5.8	2250	-
0.12	29.5	26	1.45	47.86	**BS04-../DHE05LA4**	5.8	2250	-
0.12	23	33	1.15	61.50	**BS04-../DHE05LA4**	5.8	2250	-
0.12	22	32.5	1.1	64.06	**BS04-../DHE05LA4**	5.8	2250	-
0.12	20	37.5	1.0	71.18	**BS04-../DHE05LA4**	5.8	2250	-
0.12	18.5	37.5	1.0	77.00	**BS04-../DHE05LA4**	5.8	2250	-
0.12	15	45	0.84	93.92	**BS04-../DHE05LA4**	5.8	2250	-
0.12	29	28	3.1	48.60	**BS06-../DHE05LA4**	10	3500	-
0.12	24	33.5	2.7	58.15	**BS06-../DHE05LA4**	10	3500	-
0.12	22	35	2.3	64.06	**BS06-../DHE05LA4**	10	3500	-
0.12	20	40.5	2.3	71.18	**BS06-../DHE05LA4**	10	3500	-
0.12	18.5	41.5	2.0	77.00	**BS06-../DHE05LA4**	10	3500	-
0.12	15.5	51	1.9	90.00	**BS06-../DHE05LA4**	10	3500	-
0.12	13.5	58	1.7	103.1	**BS06-../DHE05LA4**	10	3500	-
0.12	12	62	1.5	118.8	**BS06-../DHE05LA4**	10	3500	-
0.12	11	69	1.5	129.0	**BS06-../DHE05LA4**	10	3500	-
0.12	9.5	78	1.35	146.8	**BS06-../DHE05LA4**	10	3500	-
0.12	8.0	85	1.15	174.0	**BS06-../DHE05LA4**	10	3500	-
0.12	6.4	105	0.93	220.0	**BS06-../DHE05LA4**	10	3500	-
0.12	5.6	118	0.84	252.0	**BS06-../DHE05LA4**	10	3500	-
0.12	16.5	51	2.9	84.36	**BS10-../DHE06LA4**	23	5300	-
0.12	13.5	54	3.0	103.4	**BS10-../DHE06LA4**	23	5600	-
0.12	12	70	1.75	119.6	**BS10-../DHE06LA4**	23	6000	-
0.12	11	66	2.5	130.3	**BS10-../DHE06LA4**	23	6000	-
0.12	9.1	80	2.1	152.7	**BS10-../DHE06LA4**	23	6000	-
0.12	7.4	99	1.7	188.6	**BS10-../DHE06LA4**	23	6000	-
0.12	6.4	114	1.6	216.6	**BS10-../DHE06LA4**	23	6000	-
0.12	5.5	133	1.35	254.0	**BS10Z-../DHE06LA4**	24	6000	-
0.12	4.6	154	1.25	302.5	**BS10Z-../DHE06LA4**	24	6000	-
0.12	3.9	182	1.05	360.3	**BS10Z-../DHE06LA4**	24	6000	-
0.12	3.3	210	0.9	432.4	**BS10Z-../DHE06LA4**	24	6000	-
0.12	1.5	160*	1.0	969.9	**BS10G06-../DHE06LA4**	28	6000	-
0.12	1.2	160*	1.0	1166	**BS10G06-../DHE06LA4**	28	6000	-
0.12	1.1	160*	1.0	1342	**BS10G06-../DHE06LA4**	28	6000	-
0.12	0.95	160*	1.0	1528	**BS10G06-../DHE06LA4**	28	6000	-
0.12	0.85	160*	1.0	1668	**BS10G06-../DHE06LA4**	28	6000	-
0.12	0.75	160*	1.0	1963	**BS10G06-../DHE06LA4**	28	6000	-
0.12	0.6	160*	1.0	2348	**BS10G06-../DHE06LA4**	28	6000	-
0.12	0.55	160*	1.0	2635	**BS10G06-../DHE06LA4**	28	6000	-
0.12	0.49	160*	1.0	2875	**BS10G06-../DHE06LA4**	28	6000	-
0.12	0.42	160*	1.0	3332	**BS10G06-../DHE06LA4**	28	6000	-
0.12	0.39	160*	1.0	3635	**BS10G06-../DHE06LA4**	28	6000	-
0.12	0.34	160*	1.0	4163	**BS10G06-../DHE06LA4**	28	6000	-
0.12	0.29	160*	1.0	4776	**BS10G06-../DHE06LA4**	28	6000	-
0.12	0.27	160*	1.0	5209	**BS10G06-../DHE06LA4**	28	6000	-
0.12	0.24	164*	1.0	6019	**BS10G06-../DHE06LA4**	28	6000	-
0.12	0.22	164*	1.0	6565	**BS10G06-../DHE06LA4**	28	6000	-
0.12	0.19	164*	1.0	7471	**BS10G06-../DHE06LA4**	28	6000	-
0.12	0.16	164*	1.0	8703	**BS10G06-../DHE06LA4**	28	6000	-
0.12	8.7	86	3.2	159.4	**BS20-../DHE06LA4**	34	8000	-

The torques marked (*) are maximum permissible torques for service factor f_B=1.0.

0.12 kW

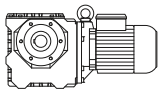

P_N	50 Hz			i	Type	m		
	n_2	M_2	f_B					
[kW]	[1/min]	[Nm]	[—]	[:1]		[kg]	[N]	[N]
0.12	7.6	99	2.8	183.0	**BS20-../DHE06LA4**	34	8000	-
0.12	6.2	118	2.5	225.6	**BS20-../DHE06LA4**	34	8000	-
0.12	5.4	135	2.2	257.8	**BS20Z-../DHE06LA4**	35	8000	-
0.12	4.7	153	1.95	300.1	**BS20Z-../DHE06LA4**	35	8000	-
0.12	3.9	182	1.75	359.9	**BS20Z-../DHE06LA4**	35	8000	-
0.12	3.3	210	1.55	430.8	**BS20Z-../DHE06LA4**	35	8000	-
0.12	2.6	240	1.5	539.7	**BS20Z-../DHE06LA4**	35	8000	-
0.12	2.3	265	1.25	619.2	**BS20Z-../DHE06LA4**	35	8000	-
0.12	1.9	325	0.95	763.4	**BS20Z-../DHE06LA4**	35	8000	-
0.12	1.7	270*	1.0	831.7	**BS20G06-../DHE06LA4**	38	8000	-
0.12	1.4	270*	1.0	1000	**BS20G06-../DHE06LA4**	38	8000	-
0.12	1.1	270*	1.0	1311	**BS20G06-../DHE06LA4**	38	8000	-
0.12	0.9	270*	1.0	1543	**BS20G06-../DHE06LA4**	38	8000	-
0.12	0.85	270*	1.0	1683	**BS20G06-../DHE06LA4**	38	8000	-
0.12	0.7	270*	1.0	2014	**BS20G06-../DHE06LA4**	38	8000	-
0.12	0.6	270*	1.0	2465	**BS20G06-../DHE06LA4**	38	8000	-
0.12	0.49	270*	1.0	2857	**BS20G06-../DHE06LA4**	38	8000	-
0.12	0.45	270*	1.0	3117	**BS20G06-../DHE06LA4**	38	8000	-
0.12	0.39	270*	1.0	3570	**BS20G06-../DHE06LA4**	38	8000	-
0.12	0.34	270*	1.0	4096	**BS20G06-../DHE06LA4**	38	8000	-
0.12	0.29	270*	1.0	4910	**BS20G06-../DHE06LA4**	38	8000	-
0.12	0.24	270*	1.0	5880	**BS20G06-../DHE06LA4**	38	8000	-
0.12	0.19	275*	1.0	7363	**BS20G06-../DHE06LA4**	38	8000	-
0.12	0.18	275*	1.0	8031	**BS20G06-../DHE06LA4**	38	8000	-
0.12	0.16	280*	1.0	9220	**BS20G06-../DHE06LA4**	38	8000	-
0.12	3.9	215	1.85	359.6	**BS30Z-../DHE06LA4**	54	10000	-
0.12	3.6	205	2.9	390.2	**BS30Z-../DHE06LA4**	54	10000	-
0.12	3.1	235	2.6	457.3	**BS30Z-../DHE06LA4**	54	10000	-
0.12	2.6	280	2.1	539.3	**BS30Z-../DHE06LA4**	54	10000	-
0.12	2.2	310	1.85	651.0	**BS30Z-../DHE06LA4**	54	10000	-
0.12	1.8	365	1.3	804.1	**BS30Z-../DHE06LA4**	54	10000	-
0.12	1.5	435	1.05	932.0	**BS30Z-../DHE06LA4**	54	10000	-
0.12	1.4	560	0.88	1022	**BS30G06-../DHE06LA4**	56	10000	-
0.12	1.2	490*	1.0	1176	**BS30G06-../DHE06LA4**	56	10000	-
0.12	0.95	490*	1.0	1461	**BS30G06-../DHE06LA4**	56	10000	-
0.12	0.9	490*	1.0	1576	**BS30G06-../DHE06LA4**	56	10000	-
0.12	0.75	490*	1.0	1886	**BS30G06-../DHE06LA4**	56	10000	-
0.12	0.65	490*	1.0	2308	**BS30G06-../DHE06LA4**	56	10000	-
0.12	0.6	490*	1.0	2518	**BS30G06-../DHE06LA4**	56	10000	-
0.12	0.48	490*	1.0	2919	**BS30G06-../DHE06LA4**	56	10000	-
0.12	0.42	490*	1.0	3344	**BS30G06-../DHE06LA4**	56	10000	-
0.12	0.38	490*	1.0	3647	**BS30G06-../DHE06LA4**	56	10000	-
0.12	0.34	490*	1.0	4184	**BS30G06-../DHE06LA4**	56	10000	-
0.12	0.29	510*	1.0	4905	**BS30G06-../DHE06LA4**	56	10000	-
0.12	0.24	520*	1.0	5783	**BS30G06-../DHE06LA4**	56	10000	-
0.12	0.22	520*	1.0	6308	**BS30G06-../DHE06LA4**	56	10000	-
0.12	0.2	520*	1.0	7179	**BS30G06-../DHE06LA4**	56	10000	-
0.12	0.17	520*	1.0	8362	**BS30G06-../DHE06LA4**	56	10000	-
0.12	2.3	300	3.0	612.1	**BS40Z-../DHE06LA4**	68	15000	-
0.12	1.9	360	2.1	736.5	**BS40Z-../DHE06LA4**	68	15000	-
0.12	1.6	420	1.75	908.2	**BS40Z-../DHE06LA4**	68	15000	-
0.12	1.5	530	1.65	965.5	**BS40G10-../DHE06LA4**	73	15000	-
0.12	1.2	660	1.35	1180	**BS40G10-../DHE06LA4**	73	15000	-
0.12	0.95	840	1.05	1499	**BS40G10-../DHE06LA4**	73	15000	-
0.12	0.8	880*	1.0	1785	**BS40G10-../DHE06LA4**	73	15000	-
0.12	0.7	880*	1.0	2126	**BS40G10-../DHE06LA4**	73	15000	-
0.12	0.65	880*	1.0	2304	**BS40G10-../DHE06LA4**	73	15000	-
0.12	0.55	880*	1.0	2552	**BS40G10-../DHE06LA4**	73	15000	-
0.12	0.48	880*	1.0	2902	**BS40G10-../DHE06LA4**	73	15000	-
0.12	0.44	880*	1.0	3215	**BS40G10-../DHE06LA4**	73	15000	-
0.12	0.37	880*	1.0	3769	**BS40G10-../DHE06LA4**	73	15000	-
0.12	0.33	880*	1.0	4201	**BS40G10-../DHE06LA4**	73	15000	-
0.12	0.3	880*	1.0	4655	**BS40G10-../DHE06LA4**	73	15000	-
0.12	0.26	900*	1.0	5498	**BS40G10-../DHE06LA4**	73	15000	-
0.12	0.23	950*	1.0	6214	**BS40G10-../DHE06LA4**	73	15000	-
0.12	0.21	950*	1.0	6885	**BS40G10-../DHE06LA4**	73	15000	-
0.12	0.18	950*	1.0	7905	**BS40G10-../DHE06LA4**	73	15000	-

The torques marked (*) are maximum permissible torques for service factor f_B=1.0.

0.18 kW

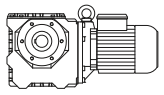

P_N	50 Hz			i	Type	m		
	n_2	M_2	f_B					
[kW]	[1/min]	[Nm]	[—]	[:1]		[kg]	[N]	[N]
0.18	300	5.0	3.0	4.60	**BS02-../DHE05LA4**	5.3	1000	-
0.18	255	5.9	3.4	5.40	**BS02-../DHE05LA4**	5.3	1000	-
0.18	205	7.2	3.5	6.75	**BS02-../DHE05LA4**	5.3	1000	-
0.18	167	8.6	2.9	8.25	**BS02-../DHE05LA4**	5.3	1100	-
0.18	129	10.9	2.3	10.67	**BS02-../DHE05LA4**	5.3	1250	-
0.18	102	13.1	1.9	13.50	**BS02-../DHE05LA4**	5.3	1250	-
0.18	77	16.5	1.5	18.00	**BS02-../DHE05LA4**	5.3	1250	-
0.18	63	19.1	1.3	22.00	**BS02-../DHE05LA4**	5.3	1250	-
0.18	51	21	1.2	27.00	**BS02-../DHE05LA4**	5.3	1250	-
0.18	42	24.5	1.0	33.00	**BS02-../DHE05LA4**	5.3	1250	-
0.18	73	17.8	3.1	19.00	**BS03-../DHE05LA4**	5.4	1950	-
0.18	55	21.5	2.6	25.00	**BS03-../DHE05LA4**	5.4	1950	-
0.18	42	24.5	2.2	33.00	**BS03-../DHE05LA4**	5.4	1950	-
0.18	35.5	30.5	1.8	39.00	**BS03-../DHE05LA4**	5.4	1950	-
0.18	27.5	36	1.55	50.00	**BS03-../DHE05LA4**	5.4	1950	-
0.18	22.5	40	1.2	62.00	**BS03-../DHE05LA4**	5.4	1950	-
0.18	18.5	47	0.85	75.00	**BS03-../DHE05LA4**	5.4	1950	-
0.18	129	10.3	3.1	10.73	**BS04-../DHE05LA4**	5.8	1600	-
0.18	106	12.4	2.7	13.09	**BS04-../DHE05LA4**	5.8	1760	-
0.18	85	15.5	2.3	16.31	**BS04-../DHE05LA4**	5.8	1970	-
0.18	77	15.8	2.2	18.00	**BS04-../DHE05LA4**	5.8	1950	-
0.18	66	19.7	1.9	20.96	**BS04-../DHE05LA4**	5.8	2100	-
0.18	57	22.5	1.5	24.25	**BS04-../DHE05LA4**	5.8	2250	-
0.18	53	23	1.65	26.21	**BS04-../DHE05LA4**	5.8	2250	-
0.18	44	27	1.4	31.50	**BS04-../DHE05LA4**	5.8	2250	-
0.18	36	32.5	1.15	38.42	**BS04-../DHE05LA4**	5.8	2250	-
0.18	29	40	0.95	47.86	**BS04-../DHE05LA4**	5.8	2250	-
0.18	57	24	3.2	24.25	**BS06-../DHE05LA4**	10	2600	-
0.18	53	23.5	3.3	26.21	**BS06-../DHE05LA4**	10	3000	-
0.18	44	28.5	2.8	31.50	**BS06-../DHE05LA4**	10	3200	-
0.18	33.5	36.5	2.4	41.29	**BS06-../DHE05LA4**	10	3500	-
0.18	28.5	43	2.0	48.60	**BS06-../DHE05LA4**	10	3500	-
0.18	24	50	1.8	58.15	**BS06-../DHE05LA4**	10	3500	-
0.18	21.5	54	1.5	64.06	**BS06-../DHE05LA4**	10	3500	-
0.18	19.5	62	1.5	71.18	**BS06-../DHE05LA4**	10	3500	-
0.18	18	63	1.35	77.00	**BS06-../DHE05LA4**	10	3500	-
0.18	15.5	77	1.25	90.00	**BS06-../DHE05LA4**	10	3500	-
0.18	13.5	87	1.15	103.1	**BS06-../DHE05LA4**	10	3500	-
0.18	12	93	1.0	118.8	**BS06-../DHE05LA4**	10	3500	-
0.18	11	104	1.0	129.0	**BS06-../DHE05LA4**	10	3500	-
0.18	9.4	118	0.9	146.8	**BS06-../DHE05LA4**	10	3500	-
0.18	29	44	3.3	47.59	**BS10-../DHE06LA4**	23	4050	-
0.18	24	53	2.8	57.12	**BS10-../DHE06LA4**	23	4350	-
0.18	23	50	3.0	60.74	**BS10-../DHE06LA4**	23	4550	-
0.18	19.5	65	2.5	71.96	**BS10-../DHE06LA4**	23	5000	-
0.18	16.5	77	1.95	84.36	**BS10-../DHE06LA4**	23	5300	-
0.18	13.5	81	2.0	103.4	**BS10-../DHE06LA4**	23	5600	-
0.18	11.5	110	1.1	119.6	**BS10-../DHE06LA4**	23	6000	-
0.18	11	100	1.65	130.3	**BS10-../DHE06LA4**	23	6000	-
0.18	9.0	122	1.35	152.7	**BS10-../DHE06LA4**	23	6000	-
0.18	7.3	150	1.15	188.6	**BS10-../DHE06LA4**	23	6000	-
0.18	6.4	171	1.05	216.6	**BS10-../DHE06LA4**	23	6000	-
0.18	5.4	200	0.9	254.0	**BS10Z-../DHE06LA4**	24	6000	-
0.18	4.6	230	0.83	302.5	**BS10Z-../DHE06LA4**	24	6000	-
0.18	14	90	2.8	101.1	**BS20-../DHE06LA4**	34	7100	-
0.18	13	87	3.1	106.3	**BS20-../DHE06LA4**	34	7600	-
0.18	11	103	2.6	127.3	**BS20-../DHE06LA4**	34	8000	-
0.18	8.6	131	2.1	159.4	**BS20-../DHE06LA4**	34	8000	-
0.18	7.5	151	1.85	183.0	**BS20-../DHE06LA4**	34	8000	-
0.18	6.1	180	1.6	225.6	**BS20-../DHE06LA4**	34	8000	-
0.18	5.4	200	1.5	257.8	**BS20Z-../DHE06LA4**	35	8000	-
0.18	4.6	235	1.3	300.1	**BS20Z-../DHE06LA4**	35	8000	-
0.18	3.9	270	1.2	359.9	**BS20Z-../DHE06LA4**	35	8000	-
0.18	3.2	325	1.0	430.8	**BS20Z-../DHE06LA4**	35	8000	-
0.18	2.6	360	1.0	539.7	**BS20Z-../DHE06LA4**	35	8000	-

The torques marked (*) are maximum permissible torques for service factor f_B=1.0.

0.18 kW

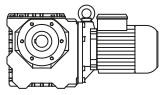

P_N	50 Hz			i	Type	m		
	n_2	M_2	f_B					
[kW]	[1/min]	[Nm]	[—]	[:1]		[kg]	[N]	[N]
0.18	2.3	400	0.83	619.2	**BS20Z-../DHE06LA4**	35	8000	-
0.18	6.4	177	2.9	216.4	**BS30-../DHE06LA4**	51	10000	-
0.18	5.3	210	2.7	261.6	**BS30Z-../DHE06LA4**	54	10000	-
0.18	4.5	245	2.4	306.6	**BS30Z-../DHE06LA4**	54	10000	-
0.18	3.9	325	1.2	359.6	**BS30Z-../DHE06LA4**	54	10000	-
0.18	3.6	310	1.9	390.2	**BS30Z-../DHE06LA4**	54	10000	-
0.18	3.0	365	1.65	457.3	**BS30Z-../DHE06LA4**	54	10000	-
0.18	2.6	420	1.45	539.3	**BS30Z-../DHE06LA4**	54	10000	-
0.18	2.2	465	1.25	651.0	**BS30Z-../DHE06LA4**	54	10000	-
0.18	1.8	550	0.87	804.1	**BS30Z-../DHE06LA4**	54	10000	-
0.18	4.8	265	2.7	287.7	**BS40Z-../DHE06LA4**	68	15000	-
0.18	3.1	345	2.9	446.8	**BS40Z-../DHE06LA4**	68	15000	-
0.18	2.7	400	2.8	520.8	**BS40Z-../DHE06LA4**	68	15000	-
0.18	2.3	455	2.0	612.1	**BS40Z-../DHE06LA4**	68	15000	-
0.18	1.9	540	1.4	736.5	**BS40Z-../DHE06LA4**	68	15000	-
0.18	1.6	630	1.2	908.2	**BS40Z-../DHE06LA4**	68	15000	-
0.18	1.5	800	1.1	965.5	**BS40G10-../DHE06LA4**	73	15000	-
0.18	1.2	1000	0.88	1180	**BS40G10-../DHE06LA4**	73	15000	-

0.25 kW

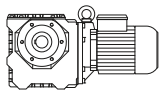

P_N	50 Hz			i	Type	m		
	n_2	M_2	f_B					
[kW]	[1/min]	[Nm]	[—]	[:1]		[kg]	[N]	[N]
0.25	300	7.0	2.1	4.60	**BS02-../DHE07LA4**	9.3	1000	-
0.25	255	8.2	2.4	5.40	**BS02-../DHE07LA4**	9.3	1000	-
0.25	205	10	2.5	6.75	**BS02-../DHE07LA4**	9.3	1000	-
0.25	167	12	2.1	8.25	**BS02-../DHE07LA4**	9.3	1100	-
0.25	129	15.1	1.65	10.67	**BS02-../DHE07LA4**	9.3	1250	-
0.25	102	18.2	1.35	13.50	**BS02-../DHE07LA4**	9.3	1250	-
0.25	77	22.5	1.1	18.00	**BS02-../DHE07LA4**	9.3	1250	-
0.25	63	26.5	0.94	22.00	**BS02-../DHE07LA4**	9.3	1250	-
0.25	51	29	0.86	27.00	**BS02-../DHE07LA4**	9.3	1250	-
0.25	102	18.2	3.0	13.50	**BS03-../DHE07LA4**	9.4	1600	-
0.25	73	24.5	2.2	19.00	**BS03-../DHE07LA4**	9.4	1950	-
0.25	55	29.5	1.85	25.00	**BS03-../DHE07LA4**	9.4	1950	-
0.25	42	34.5	1.6	33.00	**BS03-../DHE07LA4**	9.4	1950	-
0.25	35.5	43	1.3	39.00	**BS03-../DHE07LA4**	9.4	1950	-
0.25	27.5	50	1.1	50.00	**BS03-../DHE07LA4**	9.4	1950	-
0.25	22.5	56	0.86	62.00	**BS03-../DHE07LA4**	9.4	1950	-
0.25	225	8.2	3.2	6.13	**BS04-../DHE07LA4**	9.8	1300	-
0.25	154	12	2.5	8.93	**BS04-../DHE07LA4**	9.8	1500	-
0.25	129	14.4	2.2	10.73	**BS04-../DHE07LA4**	9.8	1600	-
0.25	106	17.3	1.9	13.09	**BS04-../DHE07LA4**	9.8	1760	-
0.25	85	21.5	1.65	16.31	**BS04-../DHE07LA4**	9.8	1970	-
0.25	77	22	1.55	18.00	**BS04-../DHE07LA4**	9.8	1950	-
0.25	66	27	1.35	20.96	**BS04-../DHE07LA4**	9.8	2100	-
0.25	57	31.5	1.1	24.25	**BS04-../DHE07LA4**	9.8	2250	-
0.25	53	31.5	1.2	26.21	**BS04-../DHE07LA4**	9.8	2250	-
0.25	44	37.5	1.0	31.50	**BS04-../DHE07LA4**	9.8	2250	-
0.25	36	45.5	0.81	38.42	**BS04-../DHE07LA4**	9.8	2250	-
0.25	84	22.5	3.2	16.56	**BS06-../DHE07LA4**	14	2400	-
0.25	70	27	2.8	19.82	**BS06-../DHE07LA4**	14	2500	-
0.25	57	33.5	2.3	24.25	**BS06-../DHE07LA4**	14	2600	-
0.25	53	32.5	2.4	26.21	**BS06-../DHE07LA4**	14	3000	-
0.25	44	39.5	2.0	31.50	**BS06-../DHE07LA4**	14	3200	-
0.25	33.5	51	1.7	41.29	**BS06-../DHE07LA4**	14	3500	-
0.25	28.5	60	1.45	48.60	**BS06-../DHE07LA4**	14	3500	-
0.25	24	70	1.3	58.15	**BS06-../DHE07LA4**	14	3500	-
0.25	21.5	75	1.05	64.06	**BS06-../DHE07LA4**	14	3500	-
0.25	19.5	86	1.1	71.18	**BS06-../DHE07LA4**	14	3500	-

The torques marked (*) are maximum permissible torques for service factor f_B=1.0.

0.25 kW

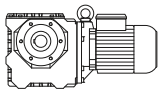

P_N	50 Hz			i	Type	m		
	n_2	M_2	f_B					
[kW]	[1/min]	[Nm]	[—]	[:1]		[kg]	[N]	[N]
0.25	18	88	0.97	77.00	**BS06-../DHE07LA4**	14	3500	-
0.25	15.5	107	0.92	90.00	**BS06-../DHE07LA4**	14	3500	-
0.25	13.5	122	0.82	103.1	**BS06-../DHE07LA4**	14	3500	-
0.25	41	44	3.1	33.55	**BS10-../DHE07LA4**	26	3550	-
0.25	34.5	51	2.7	39.96	**BS10-../DHE07LA4**	26	3800	-
0.25	29	61	2.4	47.59	**BS10-../DHE07LA4**	26	4050	-
0.25	24.5	72	2.1	57.12	**BS10-../DHE07LA4**	26	4350	-
0.25	23	69	2.2	60.74	**BS10-../DHE07LA4**	26	4550	-
0.25	19.5	90	1.8	71.96	**BS10-../DHE07LA4**	26	5000	-
0.25	16.5	107	1.4	84.36	**BS10-../DHE07LA4**	26	5300	-
0.25	13.5	113	1.4	103.4	**BS10-../DHE07LA4**	26	5600	-
0.25	11	138	1.2	130.3	**BS10-../DHE07LA4**	26	6000	-
0.25	9.1	167	0.99	152.7	**BS10-../DHE07LA4**	26	6000	-
0.25	7.3	205	0.83	188.6	**BS10-../DHE07LA4**	26	6000	-
0.25	18.5	85	3.2	76.18	**BS20-../DHE07LA4**	36	6600	-
0.25	16	98	2.8	88.67	**BS20-../DHE07LA4**	36	7000	-
0.25	14	126	2.0	101.1	**BS20-../DHE07LA4**	36	7100	-
0.25	13	121	2.2	106.3	**BS20-../DHE07LA4**	36	7600	-
0.25	11	143	1.9	127.3	**BS20-../DHE07LA4**	36	8000	-
0.25	8.7	181	1.5	159.4	**BS20-../DHE07LA4**	36	8000	-
0.25	7.6	205	1.35	183.0	**BS20-../DHE07LA4**	36	8000	-
0.25	6.1	250	1.15	225.6	**BS20-../DHE07LA4**	36	8000	-
0.25	5.4	280	1.05	257.8	**BS20Z-../DHE07LA4**	38	8000	-
0.25	4.6	325	0.92	300.1	**BS20Z-../DHE07LA4**	38	8000	-
0.25	3.9	375	0.85	359.9	**BS20Z-../DHE07LA4**	38	8000	-
0.25	9.1	175	3.1	151.1	**BS30-../DHE07LA4**	54	9500	-
0.25	7.4	210	2.6	186.7	**BS30-../DHE07LA4**	54	10000	-
0.25	6.4	245	2.1	216.4	**BS30-../DHE07LA4**	54	10000	-
0.25	5.3	295	1.9	261.6	**BS30Z-../DHE07LA4**	56	10000	-
0.25	4.5	340	1.7	306.6	**BS30Z-../DHE07LA4**	56	10000	-
0.25	3.9	450	0.88	359.6	**BS30Z-../DHE07LA4**	56	10000	-
0.25	3.6	430	1.35	390.2	**BS30Z-../DHE07LA4**	56	10000	-
0.25	3.1	490	1.2	457.3	**BS30Z-../DHE07LA4**	56	10000	-
0.25	2.6	580	1.05	539.3	**BS30Z-../DHE07LA4**	56	10000	-
0.25	2.2	650	0.89	651.0	**BS30Z-../DHE07LA4**	56	10000	-
0.25	7.0	250	2.8	197.1	**BS40Z-../DHE07LA4**	70	15000	-
0.25	4.8	365	1.95	287.7	**BS40Z-../DHE07LA4**	70	15000	-
0.25	4.6	325	3.3	302.1	**BS40Z-../DHE07LA4**	70	15000	-
0.25	3.9	385	2.8	356.8	**BS40Z-../DHE07LA4**	70	15000	-
0.25	3.1	485	2.0	446.8	**BS40Z-../DHE07LA4**	70	15000	-
0.25	2.7	550	2.0	520.8	**BS40Z-../DHE07LA4**	70	15000	-
0.25	2.3	630	1.45	612.1	**BS40Z-../DHE07LA4**	70	15000	-
0.25	1.9	750	1.0	736.5	**BS40Z-../DHE07LA4**	70	15000	-
0.25	1.6	880	0.84	908.2	**BS40Z-../DHE07LA4**	70	15000	-

0.3 kW

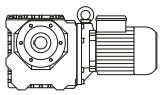

P_N	50 Hz			i	Type	m		
	n_2	M_2	f_B					
[kW]	[1/min]	[Nm]	[—]	[:1]		[kg]	[N]	[N]
0.3	300	8.4	1.8	4.60	**BS02-../DHE07LA4**	9.3	1000	-
0.3	255	9.8	2.0	5.40	**BS02-../DHE07LA4**	9.3	1000	-
0.3	205	12	2.1	6.75	**BS02-../DHE07LA4**	9.3	1000	-
0.3	165	14.5	1.7	8.25	**BS02-../DHE07LA4**	9.3	1100	-
0.3	128	18.3	1.35	10.67	**BS02-../DHE07LA4**	9.3	1250	-
0.3	101	22	1.15	13.50	**BS02-../DHE07LA4**	9.3	1250	-
0.3	76	27.5	0.91	18.00	**BS02-../DHE07LA4**	9.3	1250	-
0.3	101	22	2.5	13.50	**BS03-../DHE07LA4**	9.4	1600	-
0.3	72	30	1.85	19.00	**BS03-../DHE07LA4**	9.4	1950	-
0.3	55	35.5	1.55	25.00	**BS03-../DHE07LA4**	9.4	1950	-
0.3	41.5	42	1.3	33.00	**BS03-../DHE07LA4**	9.4	1950	-

The torques marked (*) are maximum permissible torques for service factor f_B=1.0.

0.3 kW

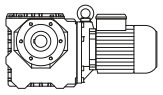

P_N	50 Hz			i	Type	m		
	n_2	M_2	f_B					
[kW]	[1/min]	[Nm]	[—]	[:1]		[kg]	[N]	[N]
0.3	35	52	1.05	39.00	**BS03-../DHE07LA4**	9.4	1950	-
0.3	27.5	60	0.92	50.00	**BS03-../DHE07LA4**	9.4	1950	-
0.3	225	9.9	2.6	6.13	**BS04-../DHE07LA4**	9.8	1300	-
0.3	153	14.6	2.1	8.93	**BS04-../DHE07LA4**	9.8	1500	-
0.3	127	17.5	1.85	10.73	**BS04-../DHE07LA4**	9.8	1600	-
0.3	104	21	1.55	13.09	**BS04-../DHE07LA4**	9.8	1760	-
0.3	84	26	1.35	16.31	**BS04-../DHE07LA4**	9.8	1970	-
0.3	76	26.5	1.3	18.00	**BS04-../DHE07LA4**	9.8	1950	-
0.3	65	33	1.1	20.96	**BS04-../DHE07LA4**	9.8	2100	-
0.3	57	38	0.89	24.25	**BS04-../DHE07LA4**	9.8	2250	-
0.3	52	39	0.97	26.21	**BS04-../DHE07LA4**	9.8	2250	-
0.3	43.5	46	0.83	31.50	**BS04-../DHE07LA4**	9.8	2250	-
0.3	97	23.5	2.9	14.07	**BS06-../DHE07LA4**	14	2200	-
0.3	83	27.5	2.6	16.56	**BS06-../DHE07LA4**	14	2400	-
0.3	69	33	2.3	19.82	**BS06-../DHE07LA4**	14	2500	-
0.3	57	40	1.95	24.25	**BS06-../DHE07LA4**	14	2600	-
0.3	52	40	1.95	26.21	**BS06-../DHE07LA4**	14	3000	-
0.3	43.5	48	1.65	31.50	**BS06-../DHE07LA4**	14	3200	-
0.3	33	62	1.4	41.29	**BS06-../DHE07LA4**	14	3500	-
0.3	28	73	1.2	48.60	**BS06-../DHE07LA4**	14	3500	-
0.3	23.5	86	1.05	58.15	**BS06-../DHE07LA4**	14	3500	-
0.3	21.5	90	0.89	64.06	**BS06-../DHE07LA4**	14	3500	-
0.3	19.5	104	0.9	71.18	**BS06-../DHE07LA4**	14	3500	-
0.3	18	106	0.8	77.00	**BS06-../DHE07LA4**	14	3500	-
0.3	52	42.5	3.1	26.42	**BS10-../DHE07LA4**	26	3250	-
0.3	41	53	2.5	33.55	**BS10-../DHE07LA4**	26	3550	-
0.3	34.5	62	2.3	39.96	**BS10-../DHE07LA4**	26	3800	-
0.3	29	74	1.95	47.59	**BS10-../DHE07LA4**	26	4050	-
0.3	24	88	1.7	57.12	**BS10-../DHE07LA4**	26	4350	-
0.3	22.5	85	1.75	60.74	**BS10-../DHE07LA4**	26	4550	-
0.3	19	111	1.45	71.96	**BS10-../DHE07LA4**	26	5000	-
0.3	16.5	128	1.15	84.36	**BS10-../DHE07LA4**	26	5300	-
0.3	13.5	135	1.2	103.4	**BS10-../DHE07LA4**	26	5600	-
0.3	10.5	174	0.94	130.3	**BS10-../DHE07LA4**	26	6000	-
0.3	9.0	200	0.83	152.7	**BS10-../DHE07LA4**	26	6000	-
0.3	23.5	91	3.1	58.74	**BS20-../DHE07LA4**	36	5900	-
0.3	19.5	110	2.7	70.30	**BS20-../DHE07LA4**	36	6300	-
0.3	18	105	2.6	76.18	**BS20-../DHE07LA4**	36	6600	-
0.3	15.5	121	2.2	88.67	**BS20-../DHE07LA4**	36	7000	-
0.3	13	145	1.85	106.3	**BS20-../DHE07LA4**	36	7600	-
0.3	11	171	1.6	127.3	**BS20-../DHE07LA4**	36	8000	-
0.3	8.6	215	1.3	159.4	**BS20-../DHE07LA4**	36	8000	-
0.3	7.5	250	1.1	183.0	**BS20-../DHE07LA4**	36	8000	-
0.3	6.1	300	0.97	225.6	**BS20-../DHE07LA4**	36	8000	-
0.3	5.3	345	0.86	257.8	**BS20Z-../DHE07LA4**	38	8000	-
0.3	16.5	133	3.1	83.48	**BS30-../DHE07LA4**	54	6800	-
0.3	11	177	2.9	125.2	**BS30-../DHE07LA4**	54	8700	-
0.3	9.1	210	2.6	151.1	**BS30-../DHE07LA4**	54	9500	-
0.3	7.3	255	2.1	186.7	**BS30-../DHE07LA4**	54	10000	-
0.3	6.3	300	1.75	216.4	**BS30-../DHE07LA4**	54	10000	-
0.3	5.2	360	1.55	261.6	**BS30Z-../DHE07LA4**	56	10000	-
0.3	4.5	410	1.4	306.6	**BS30Z-../DHE07LA4**	56	10000	-
0.3	3.5	530	1.1	390.2	**BS30Z-../DHE07LA4**	56	10000	-
0.3	3.0	610	0.98	457.3	**BS30Z-../DHE07LA4**	56	10000	-
0.3	2.6	700	0.86	539.3	**BS30Z-../DHE07LA4**	56	10000	-
0.3	7.0	300	2.3	197.1	**BS40Z-../DHE07LA4**	70	15000	-
0.3	5.5	325	2.8	249.6	**BS40Z-../DHE07LA4**	70	15000	-
0.3	4.8	440	1.65	287.7	**BS40Z-../DHE07LA4**	70	15000	-
0.3	4.6	390	2.7	302.1	**BS40Z-../DHE07LA4**	70	15000	-
0.3	3.9	460	2.3	356.8	**BS40Z-../DHE07LA4**	70	15000	-
0.3	3.1	580	1.7	446.8	**BS40Z-../DHE07LA4**	70	15000	-
0.3	2.7	660	1.65	520.8	**BS40Z-../DHE07LA4**	70	15000	-
0.3	2.3	750	1.2	612.1	**BS40Z-../DHE07LA4**	70	15000	-
0.3	1.9	900	0.84	736.5	**BS40Z-../DHE07LA4**	70	15000	-

The torques marked (*) are maximum permissible torques for service factor f_B=1.0.

0.37 kW

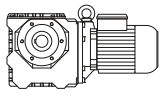

P_N	50 Hz			i	Type	m		
	n_2	M_2	f_B					
[kW]	[1/min]	[Nm]	[—]	[:1]		[kg]	[N]	[N]
0.37	315	9.8	4.1	4.60	**BS03-../DHE08MA4**	10	1070	-
0.37	240	12.9	3.4	6.00	**BS03-../DHE08MA4**	10	1170	-
0.37	179	16.9	2.8	8.00	**BS03-../DHE08MA4**	10	1320	-
0.37	143	20.5	2.5	10.00	**BS03-../DHE08MA4**	10	1450	-
0.37	106	26	2.1	13.50	**BS03-../DHE08MA4**	10	1600	-
0.37	76	35	1.55	19.00	**BS03-../DHE08MA4**	10	1950	-
0.37	58	42	1.3	25.00	**BS03-../DHE08MA4**	10	1950	-
0.37	43.5	49.5	1.1	33.00	**BS03-../DHE08MA4**	10	1950	-
0.37	37	61	0.9	39.00	**BS03-../DHE08MA4**	10	1950	-
0.37	134	21	3.1	10.73	**BS06-../DHE08MA4**	16	1850	-
0.37	102	28	2.4	14.07	**BS06-../DHE08MA4**	16	2200	-
0.37	87	32	2.3	16.56	**BS06-../DHE08MA4**	16	2400	-
0.37	73	38.5	1.95	19.82	**BS06-../DHE08MA4**	16	2500	-
0.37	59	47.5	1.6	24.25	**BS06-../DHE08MA4**	16	2600	-
0.37	55	46.5	1.65	26.21	**BS06-../DHE08MA4**	16	3000	-
0.37	45.5	56	1.45	31.50	**BS06-../DHE08MA4**	16	3200	-
0.37	35	72	1.2	41.29	**BS06-../DHE08MA4**	16	3500	-
0.37	29.5	86	1.0	48.60	**BS06-../DHE08MA4**	16	3500	-
0.37	25	100	0.91	58.15	**BS06-../DHE08MA4**	16	3500	-
0.37	67	42	3.0	21.61	**BS10-../DHE08MA4**	27	3000	-
0.37	64	38	3.1	22.60	**BS10-../DHE08MA4**	27	3200	-
0.37	55	50	2.6	26.42	**BS10-../DHE08MA4**	27	3250	-
0.37	47	51	2.5	30.63	**BS10-../DHE08MA4**	27	3550	-
0.37	43	62	2.2	33.55	**BS10-../DHE08MA4**	27	3550	-
0.37	36	73	1.9	39.96	**BS10-../DHE08MA4**	27	3800	-
0.37	30.5	86	1.7	47.59	**BS10-../DHE08MA4**	27	4050	-
0.37	25.5	102	1.45	57.12	**BS10-../DHE08MA4**	27	4350	-
0.37	24	98	1.55	60.74	**BS10-../DHE08MA4**	27	4550	-
0.37	20	130	1.25	71.96	**BS10-../DHE08MA4**	27	5000	-
0.37	17	153	0.98	84.36	**BS10-../DHE08MA4**	27	5300	-
0.37	14	161	0.99	103.4	**BS10-../DHE08MA4**	27	5600	-
0.37	11	205	0.8	130.3	**BS10-../DHE08MA4**	27	6000	-
0.37	29.5	89	3.0	48.98	**BS20-../DHE08MA4**	37	5500	-
0.37	28.5	83	3.3	50.44	**BS20-../DHE08MA4**	37	5700	-
0.37	24.5	108	2.6	58.74	**BS20-../DHE08MA4**	37	5900	-
0.37	20.5	129	2.3	70.30	**BS20-../DHE08MA4**	37	6300	-
0.37	19	122	2.2	76.18	**BS20-../DHE08MA4**	37	6600	-
0.37	16.5	141	1.9	88.67	**BS20-../DHE08MA4**	37	7000	-
0.37	14.5	180	1.4	101.1	**BS20-../DHE08MA4**	37	7100	-
0.37	13.5	172	1.55	106.3	**BS20-../DHE08MA4**	37	7600	-
0.37	11.5	200	1.35	127.3	**BS20-../DHE08MA4**	37	8000	-
0.37	9.0	255	1.1	159.4	**BS20-../DHE08MA4**	37	8000	-
0.37	7.9	295	0.95	183.0	**BS20-../DHE08MA4**	37	8000	-
0.37	6.4	350	0.83	225.6	**BS20-../DHE08MA4**	37	8000	-
0.37	17.5	155	2.6	83.48	**BS30-../DHE08MA4**	55	6800	-
0.37	16	152	3.2	90.59	**BS30-../DHE08MA4**	55	7700	-
0.37	13.5	177	2.9	106.2	**BS30-../DHE08MA4**	55	8200	-
0.37	11.5	205	2.5	125.2	**BS30-../DHE08MA4**	55	8700	-
0.37	9.5	245	2.2	151.1	**BS30-../DHE08MA4**	55	9500	-
0.37	7.7	300	1.8	186.7	**BS30-../DHE08MA4**	55	10000	-
0.37	6.7	345	1.5	216.4	**BS30-../DHE08MA4**	55	10000	-
0.37	5.5	420	1.35	261.6	**BS30Z-../DHE08MA4**	58	10000	-
0.37	4.7	485	1.2	306.6	**BS30Z-../DHE08MA4**	58	10000	-
0.37	3.7	620	0.95	390.2	**BS30Z-../DHE08MA4**	58	10000	-
0.37	3.2	700	0.86	457.3	**BS30Z-../DHE08MA4**	58	10000	-
0.37	8.1	280	2.9	178.2	**BS40-../DHE08MA4**	68	15000	-
0.37	6.6	335	2.4	219.7	**BS40-../DHE08MA4**	68	15000	-
0.37	5.8	380	2.4	249.6	**BS40Z-../DHE08MA4**	71	15000	-
0.37	5.0	520	1.4	287.7	**BS40Z-../DHE08MA4**	71	15000	-
0.37	4.8	460	2.3	302.1	**BS40Z-../DHE08MA4**	71	15000	-
0.37	4.1	540	2.0	356.8	**BS40Z-../DHE08MA4**	71	15000	-
0.37	3.3	670	1.5	446.8	**BS40Z-../DHE08MA4**	71	15000	-
0.37	2.8	790	1.4	520.8	**BS40Z-../DHE08MA4**	71	15000	-
0.37	2.4	890	1.0	612.1	**BS40Z-../DHE08MA4**	71	15000	-

The torques marked (*) are maximum permissible torques for service factor f_B=1.0.

0.55 kW

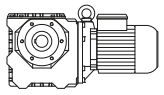

P_N	50 Hz			i	Type	m		
	n_2	M_2	f_B					
[kW]	[1/min]	[Nm]	[—]	[:1]		[kg]	[N]	[N]
0.55	310	14.9	2.7	4.60	**BS03-../DHE08LA4**	12	1070	-
0.55	240	19.2	2.3	6.00	**BS03-../DHE08LA4**	12	1170	-
0.55	177	25.5	1.9	8.00	**BS03-../DHE08LA4**	12	1320	-
0.55	142	31	1.7	10.00	**BS03-../DHE08LA4**	12	1450	-
0.55	105	39	1.4	13.50	**BS03-../DHE08LA4**	12	1600	-
0.55	75	53	1.05	19.00	**BS03-../DHE08LA4**	12	1950	-
0.55	57	63	0.87	25.00	**BS03-../DHE08LA4**	12	1950	-
0.55	215	19.7	2.8	6.67	**BS06-../DHE08LA4**	17	1550	-
0.55	159	26.5	2.3	8.93	**BS06-../DHE08LA4**	17	1710	-
0.55	132	32	2.0	10.73	**BS06-../DHE08LA4**	17	1850	-
0.55	101	42	1.6	14.07	**BS06-../DHE08LA4**	17	2200	-
0.55	86	48.5	1.5	16.56	**BS06-../DHE08LA4**	17	2400	-
0.55	72	58	1.3	19.82	**BS06-../DHE08LA4**	17	2500	-
0.55	59	71	1.1	24.25	**BS06-../DHE08LA4**	17	2600	-
0.55	54	71	1.1	26.21	**BS06-../DHE08LA4**	17	3000	-
0.55	45	85	0.94	31.50	**BS06-../DHE08LA4**	17	3200	-
0.55	114	36.5	3.0	12.49	**BS10-../DHE08LA4**	28	2400	-
0.55	84	50	2.4	16.92	**BS10-../DHE08LA4**	28	2700	-
0.55	66	63	2.0	21.61	**BS10-../DHE08LA4**	28	3000	-
0.55	63	57	2.1	22.60	**BS10-../DHE08LA4**	28	3200	-
0.55	54	75	1.75	26.42	**BS10-../DHE08LA4**	28	3250	-
0.55	46.5	77	1.7	30.63	**BS10-../DHE08LA4**	28	3550	-
0.55	42.5	93	1.45	33.55	**BS10-../DHE08LA4**	28	3550	-
0.55	35.5	110	1.25	39.96	**BS10-../DHE08LA4**	28	3800	-
0.55	30	131	1.1	47.59	**BS10-../DHE08LA4**	28	4050	-
0.55	25	155	0.97	57.12	**BS10-../DHE08LA4**	28	4350	-
0.55	23.5	149	1.0	60.74	**BS10-../DHE08LA4**	28	4550	-
0.55	20	194	0.82	71.96	**BS10-../DHE08LA4**	28	5000	-
0.55	51	80	3.1	27.86	**BS20-../DHE08LA4**	39	4450	-
0.55	46.5	81	3.1	30.63	**BS20-../DHE08LA4**	39	4750	-
0.55	43.5	92	2.9	32.87	**BS20-../DHE08LA4**	39	4750	-
0.55	35.5	106	2.5	40.25	**BS20-../DHE08LA4**	39	5300	-
0.55	34	117	2.3	42.08	**BS20-../DHE08LA4**	39	5200	-
0.55	28.5	123	2.2	50.44	**BS20-../DHE08LA4**	39	5700	-
0.55	24.5	160	1.75	58.74	**BS20-../DHE08LA4**	39	5900	-
0.55	20.5	192	1.55	70.30	**BS20-../DHE08LA4**	39	6300	-
0.55	19	182	1.5	76.18	**BS20-../DHE08LA4**	39	6600	-
0.55	16	215	1.25	88.67	**BS20-../DHE08LA4**	39	7000	-
0.55	13.5	255	1.05	106.3	**BS20-../DHE08LA4**	39	7600	-
0.55	11.5	300	0.9	127.3	**BS20-../DHE08LA4**	39	8000	-
0.55	28.5	141	3.2	50.04	**BS30-../DHE08LA4**	56	5900	-
0.55	24.5	165	2.8	58.64	**BS30-../DHE08LA4**	56	6900	-
0.55	20	183	2.6	71.17	**BS30-../DHE08LA4**	56	7000	-
0.55	17	235	1.75	83.48	**BS30-../DHE08LA4**	56	6800	-
0.55	16	225	2.2	90.59	**BS30-../DHE08LA4**	56	7700	-
0.55	13.5	260	1.95	106.2	**BS30-../DHE08LA4**	56	8200	-
0.55	11.5	310	1.7	125.2	**BS30-../DHE08LA4**	56	8700	-
0.55	9.4	370	1.45	151.1	**BS30-../DHE08LA4**	56	9500	-
0.55	7.6	455	1.2	186.7	**BS30-../DHE08LA4**	56	10000	-
0.55	6.6	520	1.0	216.4	**BS30-../DHE08LA4**	56	10000	-
0.55	5.5	630	0.89	261.6	**BS30Z-../DHE08LA4**	59	10000	-
0.55	4.7	720	0.81	306.6	**BS30Z-../DHE08LA4**	59	10000	-
0.55	11.5	305	3.2	126.0	**BS40-../DHE08LA4**	69	14900	-
0.55	9.6	355	2.7	148.1	**BS40-../DHE08LA4**	69	15000	-
0.55	8.0	425	1.95	178.2	**BS40-../DHE08LA4**	69	15000	-
0.55	6.5	500	1.6	219.7	**BS40-../DHE08LA4**	69	15000	-
0.55	5.7	580	1.55	249.6	**BS40Z-../DHE08LA4**	73	15000	-
0.55	5.0	770	0.93	287.7	**BS40Z-../DHE08LA4**	73	15000	-
0.55	4.7	700	1.55	302.1	**BS40Z-../DHE08LA4**	73	15000	-
0.55	4.0	820	1.3	356.8	**BS40Z-../DHE08LA4**	73	15000	-
0.55	3.2	1030	0.96	446.8	**BS40Z-../DHE08LA4**	73	15000	-
0.55	2.8	1180	0.93	520.8	**BS40Z-../DHE08LA4**	73	15000	-

The torques marked (*) are maximum permissible torques for service factor f_B=1.0.

0.75 kW

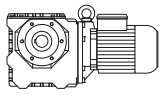

P_N	50 Hz			i	Type	m		
	n_2	M_2	f_B					
[kW]	[1/min]	[Nm]	[—]	[:1]		[kg]	[N]	[N]
0.75	310	20	2.0	4.60	**BS03-../DHE08XA4**	13	1070	-
0.75	240	26	1.7	6.00	**BS03-../DHE08XA4**	13	1170	-
0.75	178	34.5	1.4	8.00	**BS03-../DHE08XA4**	13	1320	-
0.75	142	42	1.25	10.00	**BS03-../DHE08XA4**	13	1450	-
0.75	106	52	1.05	13.50	**BS03-../DHE08XA4**	13	1600	-
0.75	215	26.5	2.1	6.67	**BS06-../DHE08XA4**	18	1550	-
0.75	160	36	1.7	8.93	**BS06-../DHE08XA4**	18	1710	-
0.75	133	43.5	1.5	10.73	**BS06-../DHE08XA4**	18	1850	-
0.75	101	57	1.2	14.07	**BS06-../DHE08XA4**	18	2200	-
0.75	86	66	1.1	16.56	**BS06-../DHE08XA4**	18	2400	-
0.75	72	79	0.95	19.82	**BS06-../DHE08XA4**	18	2500	-
0.75	55	95	0.81	26.21	**BS06-../DHE08XA4**	18	3000	-
0.75	114	50	2.2	12.49	**BS10-../DHE08XA4**	30	2400	-
0.75	84	68	1.75	16.92	**BS10-../DHE08XA4**	30	2700	-
0.75	66	86	1.45	21.61	**BS10-../DHE08XA4**	30	3000	-
0.75	63	78	1.5	22.60	**BS10-../DHE08XA4**	30	3200	-
0.75	54	103	1.25	26.42	**BS10-../DHE08XA4**	30	3250	-
0.75	46.5	106	1.25	30.63	**BS10-../DHE08XA4**	30	3550	-
0.75	42.5	128	1.05	33.55	**BS10-../DHE08XA4**	30	3550	-
0.75	36	149	0.94	39.96	**BS10-../DHE08XA4**	30	3800	-
0.75	30	179	0.81	47.59	**BS10-../DHE08XA4**	30	4050	-
0.75	84	69	3.2	16.92	**BS20-../DHE08XA4**	40	3700	-
0.75	64	90	2.6	22.23	**BS20-../DHE08XA4**	40	4100	-
0.75	62	83	2.7	23.13	**BS20-../DHE08XA4**	40	4300	-
0.75	51	109	2.3	27.86	**BS20-../DHE08XA4**	40	4450	-
0.75	46.5	110	2.3	30.63	**BS20-../DHE08XA4**	40	4750	-
0.75	43.5	126	2.1	32.87	**BS20-../DHE08XA4**	40	4750	-
0.75	35.5	145	1.8	40.25	**BS20-../DHE08XA4**	40	5300	-
0.75	34	160	1.7	42.08	**BS20-../DHE08XA4**	40	5200	-
0.75	28.5	168	1.6	50.44	**BS20-../DHE08XA4**	40	5700	-
0.75	24.5	215	1.3	58.74	**BS20-../DHE08XA4**	40	5900	-
0.75	20.5	260	1.15	70.30	**BS20-../DHE08XA4**	40	6300	-
0.75	19	245	1.1	76.18	**BS20-../DHE08XA4**	40	6600	-
0.75	16.5	285	0.95	88.67	**BS20-../DHE08XA4**	40	7000	-
0.75	42.5	138	3.0	33.55	**BS30-../DHE08XA4**	57	5200	-
0.75	37.5	143	2.9	37.92	**BS30-../DHE08XA4**	57	5500	-
0.75	36.5	158	2.7	39.31	**BS30-../DHE08XA4**	57	5500	-
0.75	28.5	193	2.3	50.04	**BS30-../DHE08XA4**	57	5900	-
0.75	24.5	225	2.0	58.64	**BS30-../DHE08XA4**	57	6900	-
0.75	20	250	1.9	71.17	**BS30-../DHE08XA4**	57	7000	-
0.75	17.5	315	1.3	83.48	**BS30-../DHE08XA4**	57	6800	-
0.75	16	305	1.6	90.59	**BS30-../DHE08XA4**	57	7700	-
0.75	13.5	360	1.4	106.2	**BS30-../DHE08XA4**	57	8200	-
0.75	11.5	420	1.25	125.2	**BS30-../DHE08XA4**	57	8700	-
0.75	9.4	510	1.05	151.1	**BS30-../DHE08XA4**	57	9500	-
0.75	7.7	610	0.89	186.7	**BS30-../DHE08XA4**	57	10000	-
0.75	20.5	265	2.8	69.60	**BS40-../DHE08XA4**	70	11800	-
0.75	16.5	295	3.1	86.33	**BS40-../DHE08XA4**	70	12900	-
0.75	13.5	355	2.7	108.1	**BS40-../DHE08XA4**	70	14000	-
0.75	11.5	415	2.4	126.0	**BS40-../DHE08XA4**	70	14900	-
0.75	9.6	480	2.0	148.1	**BS40-../DHE08XA4**	70	15000	-
0.75	8.0	580	1.4	178.2	**BS40-../DHE08XA4**	70	15000	-
0.75	6.5	690	1.15	219.7	**BS40-../DHE08XA4**	70	15000	-
0.75	5.7	790	1.15	249.6	**BS40Z-../DHE08XA4**	74	15000	-
0.75	4.8	940	1.15	302.1	**BS40Z-../DHE08XA4**	74	15000	-
0.75	4.0	1120	0.96	356.8	**BS40Z-../DHE08XA4**	74	15000	-

The torques marked (*) are maximum permissible torques for service factor f_B=1.0.

1.1 kW

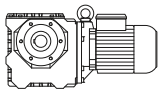

P_N	50 Hz			i	Type	m		
	n_2	M_2	f_B					
[kW]	[1/min]	[Nm]	[—]	[:1]		[kg]	[N]	[N]
1.1	116	72	1.5	12.49	**BS10-../DHE09LA4**	36	2400	-
1.1	86	97	1.25	16.92	**BS10-../DHE09LA4**	36	2700	-
1.1	67	125	1.0	21.61	**BS10-../DHE09LA4**	36	3000	-
1.1	64	113	1.05	22.60	**BS10-../DHE09LA4**	36	3200	-
1.1	55	148	0.88	26.42	**BS10-../DHE09LA4**	36	3250	-
1.1	47.5	152	0.86	30.63	**BS10-../DHE09LA4**	36	3550	-
1.1	113	75	2.7	12.77	**BS20-../DHE09LA4**	46	3350	-
1.1	86	98	2.2	16.92	**BS20-../DHE09LA4**	46	3700	-
1.1	65	130	1.75	22.23	**BS20-../DHE09LA4**	46	4100	-
1.1	63	120	1.9	23.13	**BS20-../DHE09LA4**	46	4300	-
1.1	52	157	1.6	27.86	**BS20-../DHE09LA4**	46	4450	-
1.1	47.5	159	1.55	30.63	**BS20-../DHE09LA4**	46	4750	-
1.1	44	183	1.5	32.87	**BS20-../DHE09LA4**	46	4750	-
1.1	36	210	1.25	40.25	**BS20-../DHE09LA4**	46	5300	-
1.1	34.5	230	1.15	42.08	**BS20-../DHE09LA4**	46	5200	-
1.1	29	240	1.15	50.44	**BS20-../DHE09LA4**	46	5700	-
1.1	25	315	0.89	58.74	**BS20-../DHE09LA4**	46	5900	-
1.1	69	126	3.0	20.94	**BS30-../DHE09LA4**	64	4300	-
1.1	60	131	2.8	24.06	**BS30-../DHE09LA4**	64	4600	-
1.1	54	161	2.5	27.07	**BS30-../DHE09LA4**	64	4750	-
1.1	47.5	165	2.4	30.63	**BS30-../DHE09LA4**	64	5000	-
1.1	43	200	2.1	33.55	**BS30-../DHE09LA4**	64	5200	-
1.1	38	205	2.0	37.92	**BS30-../DHE09LA4**	64	5500	-
1.1	37	225	1.9	39.31	**BS30-../DHE09LA4**	64	5500	-
1.1	29	275	1.65	50.04	**BS30-../DHE09LA4**	64	5900	-
1.1	25	320	1.45	58.64	**BS30-../DHE09LA4**	64	6900	-
1.1	20.5	355	1.35	71.17	**BS30-../DHE09LA4**	64	7000	-
1.1	17.5	460	0.89	83.48	**BS30-../DHE09LA4**	64	6800	-
1.1	16	450	1.1	90.59	**BS30-../DHE09LA4**	64	7700	-
1.1	14	510	1.0	106.2	**BS30-../DHE09LA4**	64	8200	-
1.1	12	590	0.88	125.2	**BS30-../DHE09LA4**	64	8700	-
1.1	30.5	265	3.1	47.69	**BS40-../DHE09LA4**	77	9600	-
1.1	24	310	2.8	60.38	**BS40-../DHE09LA4**	77	11200	-
1.1	21	385	1.95	69.60	**BS40-../DHE09LA4**	77	11800	-
1.1	20	365	2.4	73.09	**BS40-../DHE09LA4**	77	12100	-
1.1	17	425	2.1	86.33	**BS40-../DHE09LA4**	77	12900	-
1.1	13.5	520	1.85	108.1	**BS40-../DHE09LA4**	77	14000	-
1.1	11.5	610	1.6	126.0	**BS40-../DHE09LA4**	77	14900	-
1.1	9.8	690	1.4	148.1	**BS40-../DHE09LA4**	77	15000	-
1.1	8.1	840	0.98	178.2	**BS40-../DHE09LA4**	77	15000	-

1.5 kW

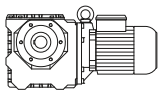

P_N	50 Hz			i	Type	m		
	n_2	M_2	f_B					
[kW]	[1/min]	[Nm]	[—]	[:1]		[kg]	[N]	[N]
1.5	116	98	1.1	12.49	**BS10-../DHE09XA4**	40	2400	-
1.5	86	133	0.9	16.92	**BS10-../DHE09XA4**	40	2700	-
1.5	113	102	1.95	12.77	**BS20-../DHE09XA4**	50	3350	-
1.5	86	134	1.65	16.92	**BS20-../DHE09XA4**	50	3700	-
1.5	65	178	1.3	22.23	**BS20-../DHE09XA4**	50	4100	-
1.5	63	163	1.4	23.13	**BS20-../DHE09XA4**	50	4300	-
1.5	52	210	1.2	27.86	**BS20-../DHE09XA4**	50	4450	-
1.5	47.5	215	1.15	30.63	**BS20-../DHE09XA4**	50	4750	-
1.5	44	250	1.1	32.87	**BS20-../DHE09XA4**	50	4750	-
1.5	36	285	0.91	40.25	**BS20-../DHE09XA4**	50	5300	-
1.5	34.5	315	0.86	42.08	**BS20-../DHE09XA4**	50	5200	-
1.5	29	330	0.82	50.44	**BS20-../DHE09XA4**	50	5700	-
1.5	109	109	3.0	13.29	**BS30-../DHE09XA4**	68	3600	-
1.5	86	138	2.6	16.92	**BS30-../DHE09XA4**	68	3950	-
1.5	69	172	2.2	20.94	**BS30-../DHE09XA4**	68	4300	-

The torques marked (*) are maximum permissible torques for service factor f_B=1.0.

1.5 kW

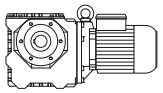

P_N	50 Hz			i	**Type**	m		
	n_2	M_2	f_B					
[kW]	[1/min]	[Nm]	[—]	[:1]		[kg]	[N]	[N]
1.5	60	179	2.1	24.06	**BS30-../DHE09XA4**	68	4600	-
1.5	54	220	1.8	27.07	**BS30-../DHE09XA4**	68	4750	-
1.5	47.5	225	1.8	30.63	**BS30-../DHE09XA4**	68	5000	-
1.5	43	270	1.55	33.55	**BS30-../DHE09XA4**	68	5200	-
1.5	38	280	1.5	37.92	**BS30-../DHE09XA4**	68	5500	-
1.5	37	310	1.4	39.31	**BS30-../DHE09XA4**	68	5500	-
1.5	29	380	1.2	50.04	**BS30-../DHE09XA4**	68	5900	-
1.5	25	440	1.05	58.64	**BS30-../DHE09XA4**	68	6900	-
1.5	20.5	485	0.99	71.17	**BS30-../DHE09XA4**	68	7000	-
1.5	16	610	0.8	90.59	**BS30-../DHE09XA4**	68	7700	-
1.5	43.5	260	3.0	33.35	**BS40-../DHE09XA4**	81	8300	-
1.5	38	275	2.8	38.13	**BS40-../DHE09XA4**	81	9400	-
1.5	36	310	2.6	40.37	**BS40-../DHE09XA4**	81	9000	-
1.5	30.5	365	2.3	47.69	**BS40-../DHE09XA4**	81	9600	-
1.5	24	420	2.0	60.38	**BS40-../DHE09XA4**	81	11200	-
1.5	21	520	1.45	69.60	**BS40-../DHE09XA4**	81	11800	-
1.5	20	500	1.75	73.09	**BS40-../DHE09XA4**	81	12100	-
1.5	17	580	1.55	86.33	**BS40-../DHE09XA4**	81	12900	-
1.5	13.5	710	1.35	108.1	**BS40-../DHE09XA4**	81	14000	-
1.5	11.5	830	1.2	126.0	**BS40-../DHE09XA4**	81	14900	-
1.5	9.8	950	1.0	148.1	**BS40-../DHE09XA4**	81	15000	-

2.2 kW

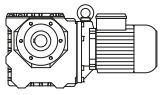

P_N	50 Hz			i	**Type**	m		
	n_2	M_2	f_B					
[kW]	[1/min]	[Nm]	[—]	[:1]		[kg]	[N]	[N]
2.2	113	150	1.35	12.77	**BS20-../DHE09XA4C**	53	3350	-
2.2	86	197	1.1	16.92	**BS20-../DHE09XA4C**	53	3700	-
2.2	65	260	0.88	22.23	**BS20-../DHE09XA4C**	53	4100	-
2.2	63	240	0.95	23.13	**BS20-../DHE09XA4C**	53	4300	-
2.2	109	159	2.1	13.29	**BS30-../DHE09XA4C**	71	3600	-
2.2	86	200	1.8	16.92	**BS30-../DHE09XA4C**	71	3950	-
2.2	69	250	1.5	20.94	**BS30-../DHE09XA4C**	71	4300	-
2.2	60	260	1.4	24.06	**BS30-../DHE09XA4C**	71	4600	-
2.2	54	320	1.25	27.07	**BS30-../DHE09XA4C**	71	4750	-
2.2	47.5	330	1.2	30.63	**BS30-../DHE09XA4C**	71	5000	-
2.2	43	400	1.05	33.55	**BS30-../DHE09XA4C**	71	5200	-
2.2	38	410	1.0	37.92	**BS30-../DHE09XA4C**	71	5500	-
2.2	37	455	0.95	39.31	**BS30-../DHE09XA4C**	71	5500	-
2.2	29	550	0.82	50.04	**BS30-../DHE09XA4C**	71	5900	-
2.2	86	205	3.3	16.92	**BS40-../DHE09XA4C**	84	6400	-
2.2	69	245	2.9	21.06	**BS40-../DHE09XA4C**	84	6900	-
2.2	62	250	2.7	23.59	**BS40-../DHE09XA4C**	84	7900	-
2.2	56	305	2.4	26.18	**BS40-../DHE09XA4C**	84	7500	-
2.2	47.5	325	2.3	30.63	**BS40-../DHE09XA4C**	84	8700	-
2.2	43.5	385	2.0	33.35	**BS40-../DHE09XA4C**	84	8300	-
2.2	38	400	1.95	38.13	**BS40-../DHE09XA4C**	84	9400	-
2.2	36	460	1.75	40.37	**BS40-../DHE09XA4C**	84	9000	-
2.2	30.5	530	1.55	47.69	**BS40-../DHE09XA4C**	84	9600	-
2.2	24	620	1.4	60.38	**BS40-../DHE09XA4C**	84	11200	-
2.2	21	770	0.97	69.60	**BS40-../DHE09XA4C**	84	11800	-
2.2	20	730	1.2	73.09	**BS40-../DHE09XA4C**	84	12100	-
2.2	17	850	1.05	86.33	**BS40-../DHE09XA4C**	84	12900	-
2.2	13.5	1040	0.91	108.1	**BS40-../DHE09XA4C**	84	14000	-
2.2	11.5	1220	0.8	126.0	**BS40-../DHE09XA4C**	84	14900	-

The torques marked (*) are maximum permissible torques for service factor f_B=1.0.

3 kW

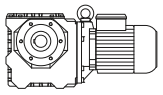

P_N	50 Hz			i	Type	m		
	n_2	M_2	f_B					
[kW]	[1/min]	[Nm]	[—]	[:1]		[kg]	[N]	[N]
3	109	215	1.55	13.29	**BS30-../DHE11MA4**	77	3600	-
3	86	275	1.3	16.92	**BS30-../DHE11MA4**	77	3950	-
3	69	340	1.1	20.94	**BS30-../DHE11MA4**	77	4300	-
3	60	355	1.05	24.06	**BS30-../DHE11MA4**	77	4600	-
3	54	440	0.91	27.07	**BS30-../DHE11MA4**	77	4750	-
3	47.5	450	0.89	30.63	**BS30-../DHE11MA4**	77	5000	-
3	111	215	2.9	13.03	**BS40-../DHE11MA4**	95	5800	-
3	86	280	2.4	16.92	**BS40-../DHE11MA4**	95	6400	-
3	69	340	2.1	21.06	**BS40-../DHE11MA4**	95	6900	-
3	62	340	2.0	23.59	**BS40-../DHE11MA4**	95	7900	-
3	56	415	1.8	26.18	**BS40-../DHE11MA4**	95	7500	-
3	47.5	445	1.7	30.63	**BS40-../DHE11MA4**	95	8700	-
3	43.5	520	1.5	33.35	**BS40-../DHE11MA4**	95	8300	-
3	38	550	1.4	38.13	**BS40-../DHE11MA4**	95	9400	-
3	36	620	1.3	40.37	**BS40-../DHE11MA4**	95	9000	-
3	30.5	730	1.15	47.69	**BS40-../DHE11MA4**	95	9600	-
3	24	840	1.0	60.38	**BS40-../DHE11MA4**	95	11200	-
3	20	1000	0.88	73.09	**BS40-../DHE11MA4**	95	12100	-

4 kW

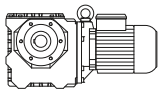

P_N	50 Hz			i	Type	m		
	n_2	M_2	f_B					
[kW]	[1/min]	[Nm]	[—]	[:1]		[kg]	[N]	[N]
4	109	290	1.15	13.29	**BS30-../DHE11LA4**	89	3600	-
4	86	365	0.99	16.92	**BS30-../DHE11LA4**	89	3950	-
4	69	455	0.84	20.94	**BS30-../DHE11LA4**	89	4300	-
4	111	290	2.1	13.03	**BS40-../DHE11LA4**	107	5800	-
4	86	375	1.8	16.92	**BS40-../DHE11LA4**	107	6400	-
4	69	450	1.6	21.06	**BS40-../DHE11LA4**	107	6900	-
4	62	455	1.5	23.59	**BS40-../DHE11LA4**	107	7900	-
4	56	550	1.35	26.18	**BS40-../DHE11LA4**	107	7500	-
4	47.5	590	1.25	30.63	**BS40-../DHE11LA4**	107	8700	-
4	43.5	700	1.1	33.35	**BS40-../DHE11LA4**	107	8300	-
4	38	730	1.05	38.13	**BS40-../DHE11LA4**	107	9400	-
4	36	830	0.96	40.37	**BS40-../DHE11LA4**	107	9000	-
4	30.5	970	0.86	47.69	**BS40-../DHE11LA4**	107	9600	-

5.5 kW

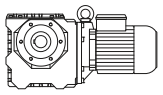

P_N	50 Hz			i	Type	m		
	n_2	M_2	f_B					
[kW]	[1/min]	[Nm]	[—]	[:1]		[kg]	[N]	[N]
5.5	110	395	0.84	13.29	**BS30-../DHE11LA4C**	93	3600	-
5.5	113	395	1.55	13.03	**BS40-../DHE11LA4C**	111	5800	-
5.5	87	510	1.3	16.92	**BS40-../DHE11LA4C**	111	6400	-
5.5	70	610	1.15	21.06	**BS40-../DHE11LA4C**	111	6900	-
5.5	62	620	1.1	23.59	**BS40-../DHE11LA4C**	111	7900	-
5.5	56	760	0.97	26.18	**BS40-../DHE11LA4C**	111	7500	-
5.5	48	800	0.94	30.63	**BS40-../DHE11LA4C**	111	8700	-
5.5	44	950	0.82	33.35	**BS40-../DHE11LA4C**	111	8300	-

The torques marked (*) are maximum permissible torques for service factor f_B=1.0.

0.03 kW

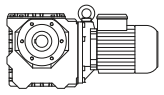

P_N	50 Hz			i	Type	m		
	n_2	M_2	f_B					
[kW]	[1/min]	[Nm]	[—]	[:1]		[kg]	[N]	[N]
0.03	75	2.8	8.9	18.00	**BS02-../D04LA4**	3.5	1250	-
0.03	62	3.2	7.8	22.00	**BS02-../D04LA4**	3.5	1250	-
0.03	50	3.6	6.9	27.00	**BS02-../D04LA4**	3.5	1250	-
0.03	41	4.15	6.0	33.00	**BS02-../D04LA4**	3.5	1250	-
0.03	31.5	5.6	4.3	43.00	**BS02-../D04LA4**	3.5	1250	-
0.03	25	6.5	3.4	54.00	**BS02-../D04LA4**	3.5	1250	-
0.03	19.5	7.4	2.7	70.00	**BS02-../D04LA4**	3.5	1250	-
0.03	14.5	11.6	3.3	93.92	**BS04-../D04LA4**	3.9	2250	-
0.03	13.5	13.5	2.8	102.9	**BS04-../D04LA4**	3.9	2250	-
0.03	12	13.6	2.8	117.0	**BS04-../D04LA4**	3.9	2250	-
0.03	11	16.4	2.5	123.0	**BS04-../D04LA4**	3.9	2250	-
0.03	9.8	18.1	2.3	138.4	**BS04-../D04LA4**	3.9	2250	-
0.03	9.0	17.5	2.2	150.3	**BS04-../D04LA4**	3.9	2250	-
0.03	8.5	20.5	1.8	160.1	**BS04-../D04LA4**	3.9	2250	-
0.03	7.8	19.8	2.0	174.0	**BS04-../D04LA4**	3.9	2250	-
0.03	6.2	24	1.65	220.0	**BS04-../D04LA4**	3.9	2250	-
0.03	5.4	27.5	1.5	251.6	**BS04-../D04LA4**	3.9	2250	-
0.03	4.5	32	1.35	300.7	**BS04-../D04LA4**	3.9	2250	-
0.03	4.0	35.5	1.25	338.3	**BS04-../D04LA4**	3.9	2250	-
0.03	3.5	40	1.15	391.3	**BS04-../D04LA4**	3.9	2250	-
0.03	3.6	56	1.7	381.5	**BS06G04-../D04LA4**	11	3500	-
0.03	2.9	70	1.35	474.8	**BS06G04-../D04LA4**	11	3500	-
0.03	2.5	79	1.25	552.6	**BS06G04-../D04LA4**	11	3500	-
0.03	2.3	88	1.05	610.7	**BS06G04-../D04LA4**	11	3500	-
0.03	2.0	101	0.93	704.7	**BS06G04-../D04LA4**	11	3500	-
0.03	1.6	94*	1.0	847.0	**BS06G04-../D04LA4**	11	3500	-
0.03	1.5	94*	1.0	939.6	**BS06G04-../D04LA4**	11	3500	-
0.03	1.2	94*	1.0	1170	**BS06G04-../D04LA4**	11	3500	-
0.03	0.9	94*	1.0	1503	**BS06G04-../D04LA4**	11	3500	-
0.03	0.85	94*	1.0	1654	**BS06G04-../D04LA4**	11	3500	-
0.03	0.75	94*	1.0	1914	**BS06G04-../D04LA4**	11	3500	-
0.03	0.65	94*	1.0	2200	**BS06G04-../D04LA4**	11	3500	-
0.03	0.49	94*	1.0	2768	**BS06G04-../D04LA4**	11	3500	-
0.03	0.45	94*	1.0	3007	**BS06G04-../D04LA4**	11	3500	-
0.03	0.41	94*	1.0	3308	**BS06G04-../D04LA4**	11	3500	-
0.03	0.37	94*	1.0	3721	**BS06G04-../D04LA4**	11	3500	-
0.03	0.32	94*	1.0	4304	**BS06G04-../D04LA4**	11	3500	-
0.03	0.28	98*	1.0	4947	**BS06G04-../D04LA4**	11	3500	-
0.03	0.25	98*	1.0	5442	**BS06G04-../D04LA4**	11	3500	-
0.03	0.22	100*	1.0	6234	**BS06G04-../D04LA4**	11	3500	-
0.03	5.4	30.5	3.2	252.0	**BS06-../D04LA4**	8.4	3500	-
0.03	4.3	37.5	2.8	315.3	**BS06-../D04LA4**	8.4	3500	-
0.03	3.8	42	2.6	358.9	**BS06-../D04LA4**	8.4	3500	-
0.03	3.3	47.5	2.3	418.0	**BS06-../D04LA4**	8.4	3500	-
0.03	2.5	67	2.8	544.8	**BS10Z-../D04LA4**	21	6000	-
0.03	2.2	72	2.6	638.7	**BS10Z-../D04LA4**	21	6000	-
0.03	1.8	85	2.1	788.7	**BS10Z-../D04LA4**	21	6000	-
0.03	1.5	101	1.55	905.6	**BS10Z-../D04LA4**	21	6000	-
0.03	1.4	130	1.25	969.9	**BS10G06-../D04LA4**	25	6000	-
0.03	1.2	152	1.05	1166	**BS10G06-../D04LA4**	25	6000	-
0.03	1.1	166	0.96	1342	**BS10G06-../D04LA4**	25	6000	-
0.03	0.9	160*	1.0	1528	**BS10G06-../D04LA4**	25	6000	-
0.03	0.85	160*	1.0	1668	**BS10G06-../D04LA4**	25	6000	-
0.03	0.7	160*	1.0	1963	**BS10G06-../D04LA4**	25	6000	-
0.03	0.6	160*	1.0	2348	**BS10G06-../D04LA4**	25	6000	-
0.03	0.55	160*	1.0	2635	**BS10G06-../D04LA4**	25	6000	-
0.03	0.47	160*	1.0	2875	**BS10G06-../D04LA4**	25	6000	-
0.03	0.41	160*	1.0	3332	**BS10G06-../D04LA4**	25	6000	-
0.03	0.38	160*	1.0	3635	**BS10G06-../D04LA4**	25	6000	-
0.03	0.33	160*	1.0	4163	**BS10G06-../D04LA4**	25	6000	-
0.03	0.29	160*	1.0	4776	**BS10G06-../D04LA4**	25	6000	-
0.03	0.26	160*	1.0	5209	**BS10G06-../D04LA4**	25	6000	-
0.03	0.23	164*	1.0	6019	**BS10G06-../D04LA4**	25	6000	-
0.03	0.21	164*	1.0	6565	**BS10G06-../D04LA4**	25	6000	-
0.03	0.19	164*	1.0	7471	**BS10G06-../D04LA4**	25	6000	-
0.03	0.16	164*	1.0	8703	**BS10G06-../D04LA4**	25	6000	-

The torques marked (*) are maximum permissible torques for service factor f_B=1.0.

0.03 kW

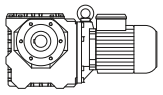

P_N	50 Hz			i	Type	m		
	n_2	M_2	f_B					
[kW]	[1/min]	[Nm]	[—]	[:1]		[kg]	[N]	[N]
0.03	1.7	111	2.4	831.7	**BS20G06-../D04LA4**	35	8000	-
0.03	1.4	135	2.0	1000	**BS20G06-../D04LA4**	35	8000	-
0.03	1.1	171	1.6	1311	**BS20G06-../D04LA4**	35	8000	-
0.03	0.9	210	1.3	1543	**BS20G06-../D04LA4**	35	8000	-
0.03	0.85	220	1.25	1683	**BS20G06-../D04LA4**	35	8000	-
0.03	0.7	270*	1.0	2014	**BS20G06-../D04LA4**	35	8000	-
0.03	0.55	270*	1.0	2465	**BS20G06-../D04LA4**	35	8000	-
0.03	0.48	270*	1.0	2857	**BS20G06-../D04LA4**	35	8000	-
0.03	0.44	270*	1.0	3117	**BS20G06-../D04LA4**	35	8000	-
0.03	0.38	270*	1.0	3570	**BS20G06-../D04LA4**	35	8000	-
0.03	0.33	270*	1.0	4096	**BS20G06-../D04LA4**	35	8000	-
0.03	0.28	270*	1.0	4910	**BS20G06-../D04LA4**	35	8000	-
0.03	0.23	270*	1.0	5880	**BS20G06-../D04LA4**	35	8000	-
0.03	0.19	275*	1.0	7363	**BS20G06-../D04LA4**	35	8000	-
0.03	0.17	275*	1.0	8031	**BS20G06-../D04LA4**	35	8000	-
0.03	0.15	280*	1.0	9220	**BS20G06-../D04LA4**	35	8000	-
0.03	1.2	164	3.0	1176	**BS30G06-../D04LA4**	53	10000	-
0.03	0.95	205	2.4	1461	**BS30G06-../D04LA4**	53	10000	-
0.03	0.9	215	2.3	1576	**BS30G06-../D04LA4**	53	10000	-
0.03	0.75	260	1.9	1886	**BS30G06-../D04LA4**	53	10000	-
0.03	0.6	325	1.5	2308	**BS30G06-../D04LA4**	53	10000	-
0.03	0.55	355	1.4	2518	**BS30G06-../D04LA4**	53	10000	-
0.03	0.47	420	1.15	2919	**BS30G06-../D04LA4**	53	10000	-
0.03	0.41	480	1.0	3344	**BS30G06-../D04LA4**	53	10000	-
0.03	0.38	490*	1.0	3647	**BS30G06-../D04LA4**	53	10000	-
0.03	0.33	490*	1.0	4184	**BS30G06-../D04LA4**	53	10000	-
0.03	0.28	510*	1.0	4905	**BS30G06-../D04LA4**	53	10000	-
0.03	0.24	520*	1.0	5783	**BS30G06-../D04LA4**	53	10000	-
0.03	0.22	520*	1.0	6308	**BS30G06-../D04LA4**	53	10000	-
0.03	0.19	520*	1.0	7179	**BS30G06-../D04LA4**	53	10000	-
0.03	0.17	520*	1.0	8362	**BS30G06-../D04LA4**	53	10000	-

0.04 kW

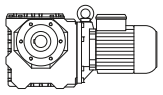

P_N	50 Hz			i	Type	m		
	n_2	M_2	f_B					
[kW]	[1/min]	[Nm]	[—]	[:1]		[kg]	[N]	[N]
0.04	127	2.45	10	10.67	**BS02-../D04LA4**	3.5	1250	-
0.04	100	2.95	8.5	13.50	**BS02-../D04LA4**	3.5	1250	-
0.04	75	3.75	6.7	18.00	**BS02-../D04LA4**	3.5	1250	-
0.04	62	4.3	5.8	22.00	**BS02-../D04LA4**	3.5	1250	-
0.04	50	4.8	5.2	27.00	**BS02-../D04LA4**	3.5	1250	-
0.04	41	5.5	4.5	33.00	**BS02-../D04LA4**	3.5	1250	-
0.04	31.5	7.5	3.2	43.00	**BS02-../D04LA4**	3.5	1250	-
0.04	25	8.7	2.5	54.00	**BS02-../D04LA4**	3.5	1250	-
0.04	19.5	9.9	2.0	70.00	**BS02-../D04LA4**	3.5	1250	-
0.04	21.5	11.1	3.2	64.06	**BS04-../D04LA4**	3.9	2250	-
0.04	19	13.2	2.9	71.18	**BS04-../D04LA4**	3.9	2250	-
0.04	18	12.9	2.9	77.00	**BS04-../D04LA4**	3.9	2250	-
0.04	14.5	15.5	2.5	93.92	**BS04-../D04LA4**	3.9	2250	-
0.04	13.5	18.1	2.1	102.9	**BS04-../D04LA4**	3.9	2250	-
0.04	12	18.1	2.1	117.0	**BS04-../D04LA4**	3.9	2250	-
0.04	11	21.5	1.9	123.0	**BS04-../D04LA4**	3.9	2250	-
0.04	9.8	24	1.75	138.4	**BS04-../D04LA4**	3.9	2250	-
0.04	9.0	23	1.7	150.3	**BS04-../D04LA4**	3.9	2250	-
0.04	8.5	27	1.35	160.1	**BS04-../D04LA4**	3.9	2250	-
0.04	7.8	26	1.55	174.0	**BS04-../D04LA4**	3.9	2250	-
0.04	6.2	32.5	1.25	220.0	**BS04-../D04LA4**	3.9	2250	-
0.04	5.4	36.5	1.1	251.6	**BS04-../D04LA4**	3.9	2250	-
0.04	4.5	43	1.0	300.7	**BS04-../D04LA4**	3.9	2250	-
0.04	4.0	47.5	0.93	338.3	**BS04-../D04LA4**	3.9	2250	-
0.04	3.5	53	0.85	391.3	**BS04-../D04LA4**	3.9	2250	-
0.04	3.6	75	1.25	381.5	**BS06G04-../D04LA4**	11	3500	-

The torques marked (*) are maximum permissible torques for service factor f_B=1.0.

0.04 kW

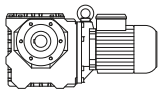

P_N	50 Hz			i	Type	m		
	n_2	M_2	f_B					
[kW]	[1/min]	[Nm]	[—]	[:1]		[kg]	[N]	[N]
0.04	2.9	93	1.0	474.8	**BS06G04-../D04LA4**	11	3500	-
0.04	2.5	105	0.95	552.6	**BS06G04-../D04LA4**	11	3500	-
0.04	2.3	117	0.8	610.7	**BS06G04-../D04LA4**	11	3500	-
0.04	7.9	30.5	2.9	171.0	**BS06-../D04LA4**	8.4	3500	-
0.04	6.2	36	2.7	220.0	**BS06-../D04LA4**	8.4	3500	-
0.04	5.4	41	2.4	252.0	**BS06-../D04LA4**	8.4	3500	-
0.04	4.3	50	2.1	315.3	**BS06-../D04LA4**	8.4	3500	-
0.04	3.8	56	1.95	358.9	**BS06-../D04LA4**	8.4	3500	-
0.04	3.3	63	1.75	418.0	**BS06-../D04LA4**	8.4	3500	-
0.04	3.8	62	3.1	360.3	**BS10Z-../D04LA4**	21	6000	-
0.04	3.2	72	2.6	432.4	**BS10Z-../D04LA4**	21	6000	-
0.04	2.5	90	2.1	544.8	**BS10Z-../D04LA4**	21	6000	-
0.04	2.2	97	1.95	638.7	**BS10Z-../D04LA4**	21	6000	-
0.04	1.8	114	1.6	788.7	**BS10Z-../D04LA4**	21	6000	-
0.04	1.5	134	1.2	905.6	**BS10Z-../D04LA4**	21	6000	-
0.04	1.4	174	0.92	969.9	**BS10G06-../D04LA4**	25	6000	-
0.04	1.2	200	0.8	1166	**BS10G06-../D04LA4**	25	6000	-
0.04	1.8	114	2.7	763.4	**BS20Z-../D04LA4**	32	8000	-
0.04	1.7	148	1.8	831.7	**BS20G06-../D04LA4**	35	8000	-
0.04	1.4	180	1.5	1000	**BS20G06-../D04LA4**	35	8000	-
0.04	1.1	225	1.2	1311	**BS20G06-../D04LA4**	35	8000	-
0.04	1.4	188	2.6	1022	**BS30G06-../D04LA4**	53	10000	-
0.04	1.2	215	2.3	1176	**BS30G06-../D04LA4**	53	10000	-
0.04	0.95	275	1.8	1461	**BS30G06-../D04LA4**	53	10000	-
0.04	0.9	290	1.7	1576	**BS30G06-../D04LA4**	53	10000	-
0.04	0.75	350	1.4	1886	**BS30G06-../D04LA4**	53	10000	-
0.04	0.6	435	1.15	2308	**BS30G06-../D04LA4**	53	10000	-
0.04	0.55	475	1.05	2518	**BS30G06-../D04LA4**	53	10000	-

0.06 kW

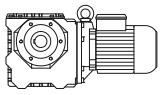

P_N	50 Hz			i	Type	m		
	n_2	M_2	f_B					
[kW]	[1/min]	[Nm]	[—]	[:1]		[kg]	[N]	[N]
0.06	295	1.7	8.8	4.60	**BS02-../D04LA4**	3.5	1000	-
0.06	250	2.0	10	5.40	**BS02-../D04LA4**	3.5	1000	-
0.06	200	2.45	10	6.75	**BS02-../D04LA4**	3.5	1000	-
0.06	164	2.9	8.6	8.25	**BS02-../D04LA4**	3.5	1100	-
0.06	127	3.65	6.8	10.67	**BS02-../D04LA4**	3.5	1250	-
0.06	100	4.45	5.6	13.50	**BS02-../D04LA4**	3.5	1250	-
0.06	75	5.6	4.5	18.00	**BS02-../D04LA4**	3.5	1250	-
0.06	62	6.4	3.9	22.00	**BS02-../D04LA4**	3.5	1250	-
0.06	50	7.2	3.5	27.00	**BS02-../D04LA4**	3.5	1250	-
0.06	41	8.3	3.0	33.00	**BS02-../D04LA4**	3.5	1250	-
0.06	31.5	11.2	2.1	43.00	**BS02-../D04LA4**	3.5	1250	-
0.06	25	13	1.7	54.00	**BS02-../D04LA4**	3.5	1250	-
0.06	19.5	14.9	1.35	70.00	**BS02-../D04LA4**	3.5	1250	-
0.06	18	16.2	2.5	75.00	**BS03-../D05LA4**	5.4	1950	-
0.06	35.5	11.1	3.3	38.42	**BS04-../D04LA4**	3.9	2250	-
0.06	28.5	13.6	2.8	47.86	**BS04-../D04LA4**	3.9	2250	-
0.06	21.5	16.7	2.2	64.06	**BS04-../D04LA4**	3.9	2250	-
0.06	19	19.9	1.9	71.18	**BS04-../D04LA4**	3.9	2250	-
0.06	18	19.4	1.95	77.00	**BS04-../D04LA4**	3.9	2250	-
0.06	14.5	23	1.65	93.92	**BS04-../D04LA4**	3.9	2250	-
0.06	13.5	27	1.4	102.9	**BS04-../D04LA4**	3.9	2250	-
0.06	12	27	1.4	117.0	**BS04-../D04LA4**	3.9	2250	-
0.06	11	32.5	1.25	123.0	**BS04-../D04LA4**	3.9	2250	-
0.06	9.8	36	1.15	138.4	**BS04-../D04LA4**	3.9	2250	-
0.06	9.0	35	1.1	150.3	**BS04-../D04LA4**	3.9	2250	-
0.06	8.5	41	0.9	160.1	**BS04-../D04LA4**	3.9	2250	-

The torques marked (*) are maximum permissible torques for service factor f_B=1.0.

0.06 kW

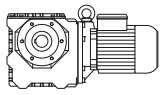

P_N	50 Hz			i	Type	m		
	n_2	M_2	f_B					
[kW]	[1/min]	[Nm]	[—]	[:1]		[kg]	[N]	[N]
0.06	7.8	39.5	1.0	174.0	**BS04-../D04LA4**	3.9	2250	-
0.06	6.2	48.5	0.82	220.0	**BS04-../D04LA4**	3.9	2250	-
0.06	3.6	113	0.83	381.5	**BS06G04-../D04LA4**	11	3500	-
0.06	11.5	32	2.9	118.8	**BS06-../D04LA4**	8.4	3500	-
0.06	10.5	36.5	2.8	129.0	**BS06-../D04LA4**	8.4	3500	-
0.06	9.2	40	2.7	146.8	**BS06-../D04LA4**	8.4	3500	-
0.06	7.8	44	2.2	174.0	**BS06-../D04LA4**	8.4	3500	-
0.06	6.2	54	1.8	220.0	**BS06-../D04LA4**	8.4	3500	-
0.06	5.4	61	1.6	252.0	**BS06-../D04LA4**	8.4	3500	-
0.06	4.3	75	1.4	315.3	**BS06-../D04LA4**	8.4	3500	-
0.06	3.8	84	1.3	358.9	**BS06-../D04LA4**	8.4	3500	-
0.06	3.3	95	1.15	418.0	**BS06-../D04LA4**	8.4	3500	-
0.06	11.5	36.5	3.3	119.6	**BS10-../D06LA4**	23	6000	-
0.06	6.3	58	3.1	216.6	**BS10-../D06LA4**	23	6000	-
0.06	5.4	67	2.7	254.0	**BS10Z-../D06LA4**	24	6000	-
0.06	4.5	78	2.4	302.5	**BS10Z-../D06LA4**	24	6000	-
0.06	3.8	93	2.0	360.3	**BS10Z-../D06LA4**	24	6000	-
0.06	3.2	109	1.75	432.4	**BS10Z-../D06LA4**	24	6000	-
0.06	2.5	135	1.4	544.8	**BS10Z-../D06LA4**	24	6000	-
0.06	2.2	145	1.3	638.7	**BS10Z-../D06LA4**	24	6000	-
0.06	1.8	171	1.05	788.7	**BS10Z-../D06LA4**	24	6000	-
0.06	3.2	109	3.0	430.8	**BS20Z-../D06LA4**	35	8000	-
0.06	2.6	121	3.0	539.7	**BS20Z-../D06LA4**	35	8000	-
0.06	2.2	140	2.4	619.2	**BS20Z-../D06LA4**	35	8000	-
0.06	1.8	171	1.8	763.4	**BS20Z-../D06LA4**	35	8000	-
0.06	1.7	220	1.25	831.7	**BS20G06-../D06LA4**	38	8000	-
0.06	1.4	270	1.0	1000	**BS20G06-../D06LA4**	38	8000	-
0.06	1.7	195	2.4	804.1	**BS30Z-../D06LA4**	54	10000	-
0.06	1.5	215	2.1	932.0	**BS30Z-../D06LA4**	54	10000	-
0.06	1.4	280	1.75	1022	**BS30G06-../D06LA4**	56	10000	-
0.06	1.2	325	1.5	1176	**BS30G06-../D06LA4**	56	10000	-
0.06	0.95	415	1.2	1461	**BS30G06-../D06LA4**	56	10000	-
0.06	0.9	435	1.15	1576	**BS30G06-../D06LA4**	56	10000	-
0.06	1.5	225	3.3	908.2	**BS40Z-../D06LA4**	68	15000	-
0.06	1.4	285	3.1	965.5	**BS40G10-../D06LA4**	73	15000	-
0.06	1.2	330	2.7	1180	**BS40G10-../D06LA4**	73	15000	-
0.06	0.95	420	2.1	1499	**BS40G10-../D06LA4**	73	15000	-
0.06	0.8	500	1.75	1785	**BS40G10-../D06LA4**	73	15000	-
0.06	0.65	610	1.45	2126	**BS40G10-../D06LA4**	73	15000	-
0.06	0.6	660	1.35	2304	**BS40G10-../D06LA4**	73	15000	-
0.06	0.55	720	1.2	2552	**BS40G10-../D06LA4**	73	15000	-
0.06	0.47	850	1.05	2902	**BS40G10-../D06LA4**	73	15000	-

0.09 kW

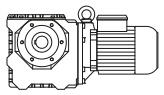

P_N	50 Hz			i	Type	m		
	n_2	M_2	f_B					
[kW]	[1/min]	[Nm]	[—]	[:1]		[kg]	[N]	[N]
0.09	295	2.55	5.9	4.60	**BS02-../D04LA4**	3.5	1000	-
0.09	250	3.0	6.7	5.40	**BS02-../D04LA4**	3.5	1000	-
0.09	200	3.65	6.8	6.75	**BS02-../D04LA4**	3.5	1000	-
0.09	164	4.4	5.7	8.25	**BS02-../D04LA4**	3.5	1100	-
0.09	127	5.5	4.5	10.67	**BS02-../D04LA4**	3.5	1250	-
0.09	100	6.7	3.7	13.50	**BS02-../D04LA4**	3.5	1250	-
0.09	75	8.4	3.0	18.00	**BS02-../D04LA4**	3.5	1250	-
0.09	62	9.7	2.6	22.00	**BS02-../D04LA4**	3.5	1250	-
0.09	50	10.8	2.3	27.00	**BS02-../D04LA4**	3.5	1250	-
0.09	41	12.5	2.0	33.00	**BS02-../D04LA4**	3.5	1250	-
0.09	31.5	16.9	1.4	43.00	**BS02-../D04LA4**	3.5	1250	-
0.09	25	19.5	1.15	54.00	**BS02-../D04LA4**	3.5	1250	-

The torques marked (*) are maximum permissible torques for service factor f_B=1.0.

0.09 kW

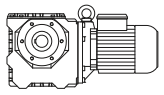

P_N	50 Hz			i	Type	m		
	n_2	M_2	f_B					
[kW]	[1/min]	[Nm]	[—]	[:1]		[kg]	[N]	[N]
0.09	19.5	22	0.91	70.00	**BS02-../D04LA4**	3.5	1250	-
0.09	27	18.4	3.0	50.00	**BS03-../D05LA4**	5.4	1950	-
0.09	22	20.5	2.3	62.00	**BS03-../D05LA4**	5.4	1950	-
0.09	18	24	1.65	75.00	**BS03-../D05LA4**	5.4	1950	-
0.09	56	11.6	2.9	24.25	**BS04-../D04LA4**	3.9	2250	-
0.09	52	11.7	3.2	26.21	**BS04-../D04LA4**	3.9	2250	-
0.09	43	13.9	2.7	31.50	**BS04-../D04LA4**	3.9	2250	-
0.09	35.5	16.7	2.2	38.42	**BS04-../D04LA4**	3.9	2250	-
0.09	28.5	20.5	1.85	47.86	**BS04-../D04LA4**	3.9	2250	-
0.09	21.5	25	1.45	64.06	**BS04-../D04LA4**	3.9	2250	-
0.09	19	29.5	1.3	71.18	**BS04-../D04LA4**	3.9	2250	-
0.09	18	29	1.3	77.00	**BS04-../D04LA4**	3.9	2250	-
0.09	14.5	34.5	1.1	93.92	**BS04-../D04LA4**	3.9	2250	-
0.09	13.5	40.5	0.94	102.9	**BS04-../D04LA4**	3.9	2250	-
0.09	12	40.5	0.94	117.0	**BS04-../D04LA4**	3.9	2250	-
0.09	11	49	0.84	123.0	**BS04-../D04LA4**	3.9	2250	-
0.09	21.5	27	3.0	64.06	**BS06-../D04LA4**	8.4	3500	-
0.09	19	32	2.9	71.18	**BS06-../D04LA4**	8.4	3500	-
0.09	18	31.5	2.7	77.00	**BS06-../D04LA4**	8.4	3500	-
0.09	15	40	2.5	90.00	**BS06-../D04LA4**	8.4	3500	-
0.09	13.5	43.5	2.3	103.1	**BS06-../D04LA4**	8.4	3500	-
0.09	11.5	48.5	1.95	118.8	**BS06-../D04LA4**	8.4	3500	-
0.09	10.5	54	1.95	129.0	**BS06-../D04LA4**	8.4	3500	-
0.09	9.2	60	1.75	146.8	**BS06-../D04LA4**	8.4	3500	-
0.09	7.8	66	1.5	174.0	**BS06-../D04LA4**	8.4	3500	-
0.09	6.2	81	1.2	220.0	**BS06-../D04LA4**	8.4	3500	-
0.09	5.4	92	1.1	252.0	**BS06-../D04LA4**	8.4	3500	-
0.09	4.3	113	0.94	315.3	**BS06-../D04LA4**	8.4	3500	-
0.09	3.8	126	0.87	358.9	**BS06-../D04LA4**	8.4	3500	-
0.09	11.5	55	2.2	119.6	**BS10-../D06LA4**	23	6000	-
0.09	10.5	52	3.2	130.3	**BS10-../D06LA4**	23	6000	-
0.09	8.9	61	2.7	152.7	**BS10-../D06LA4**	23	6000	-
0.09	7.2	76	2.2	188.6	**BS10-../D06LA4**	23	6000	-
0.09	6.3	87	2.1	216.6	**BS10-../D06LA4**	23	6000	-
0.09	5.4	101	1.8	254.0	**BS10Z-../D06LA4**	24	6000	-
0.09	4.5	118	1.6	302.5	**BS10Z-../D06LA4**	24	6000	-
0.09	3.8	140	1.35	360.3	**BS10Z-../D06LA4**	24	6000	-
0.09	3.2	163	1.15	432.4	**BS10Z-../D06LA4**	24	6000	-
0.09	2.5	200	0.95	544.8	**BS10Z-../D06LA4**	24	6000	-
0.09	2.2	215	0.88	638.7	**BS10Z-../D06LA4**	24	6000	-
0.09	6.0	91	3.2	225.6	**BS20-../D06LA4**	34	8000	-
0.09	5.3	103	2.9	257.8	**BS20Z-../D06LA4**	35	8000	-
0.09	4.5	120	2.5	300.1	**BS20Z-../D06LA4**	35	8000	-
0.09	3.8	140	2.3	359.9	**BS20Z-../D06LA4**	35	8000	-
0.09	3.2	163	2.0	430.8	**BS20Z-../D06LA4**	35	8000	-
0.09	2.6	181	2.0	539.7	**BS20Z-../D06LA4**	35	8000	-
0.09	2.2	210	1.55	619.2	**BS20Z-../D06LA4**	35	8000	-
0.09	1.8	255	1.2	763.4	**BS20Z-../D06LA4**	35	8000	-
0.09	1.7	330	0.82	831.7	**BS20G06-../D06LA4**	38	8000	-
0.09	3.8	167	2.4	359.6	**BS30Z-../D06LA4**	54	10000	-
0.09	3.0	183	3.3	457.3	**BS30Z-../D06LA4**	54	10000	-
0.09	2.6	210	2.9	539.3	**BS30Z-../D06LA4**	54	10000	-
0.09	2.1	245	2.4	651.0	**BS30Z-../D06LA4**	54	10000	-
0.09	1.7	290	1.65	804.1	**BS30Z-../D06LA4**	54	10000	-
0.09	1.5	325	1.4	932.0	**BS30Z-../D06LA4**	54	10000	-
0.09	1.4	420	1.15	1022	**BS30G06-../D06LA4**	56	10000	-
0.09	1.2	490	1.0	1176	**BS30G06-../D06LA4**	56	10000	-
0.09	1.9	270	2.8	736.5	**BS40Z-../D06LA4**	68	15000	-
0.09	1.5	335	2.2	908.2	**BS40Z-../D06LA4**	68	15000	-
0.09	1.4	425	2.1	965.5	**BS40G10-../D06LA4**	73	15000	-
0.09	1.2	500	1.75	1180	**BS40G10-../D06LA4**	73	15000	-
0.09	0.95	630	1.4	1499	**BS40G10-../D06LA4**	73	15000	-
0.09	0.8	750	1.15	1785	**BS40G10-../D06LA4**	73	15000	-

The torques marked (*) are maximum permissible torques for service factor f_B=1.0.

0.11 kW

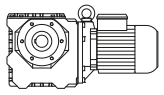

P_N	50 Hz			i	Type	m		
	n_2	M_2	f_B					
[kW]	[1/min]	[Nm]	[—]	[:1]		[kg]	[N]	[N]
0.11	295	3.1	4.8	4.60	**BS02-../D04LA4**	3.5	1000	-
0.11	250	3.65	5.5	5.40	**BS02-../D04LA4**	3.5	1000	-
0.11	200	4.5	5.6	6.75	**BS02-../D04LA4**	3.5	1000	-
0.11	164	5.3	4.7	8.25	**BS02-../D04LA4**	3.5	1100	-
0.11	127	6.7	3.7	10.67	**BS02-../D04LA4**	3.5	1250	-
0.11	100	8.1	3.1	13.50	**BS02-../D04LA4**	3.5	1250	-
0.11	75	10.3	2.4	18.00	**BS02-../D04LA4**	3.5	1250	-
0.11	62	11.8	2.1	22.00	**BS02-../D04LA4**	3.5	1250	-
0.11	50	13.2	1.9	27.00	**BS02-../D04LA4**	3.5	1250	-
0.11	41	15.3	1.65	33.00	**BS02-../D04LA4**	3.5	1250	-
0.11	31.5	20.5	1.15	43.00	**BS02-../D04LA4**	3.5	1250	-
0.11	25	23.5	0.94	54.00	**BS02-../D04LA4**	3.5	1250	-
0.11	65	12.2	3.0	20.96	**BS04-../D04LA4**	3.9	2100	-
0.11	56	14.2	2.4	24.25	**BS04-../D04LA4**	3.9	2250	-
0.11	52	14.3	2.7	26.21	**BS04-../D04LA4**	3.9	2250	-
0.11	43	17.1	2.2	31.50	**BS04-../D04LA4**	3.9	2250	-
0.11	35.5	20	1.85	38.42	**BS04-../D04LA4**	3.9	2250	-
0.11	28.5	25	1.5	47.86	**BS04-../D04LA4**	3.9	2250	-
0.11	21.5	30.5	1.2	64.06	**BS04-../D04LA4**	3.9	2250	-
0.11	19	36	1.05	71.18	**BS04-../D04LA4**	3.9	2250	-
0.11	18	35.5	1.05	77.00	**BS04-../D04LA4**	3.9	2250	-
0.11	14.5	42.5	0.89	93.92	**BS04-../D04LA4**	3.9	2250	-
0.11	3.6	94*	1.0	381.5	**BS06G04-../D04LA4**	11	3500	-
0.11	2.9	94*	1.0	474.8	**BS06G04-../D04LA4**	11	3500	-
0.11	2.5	100*	1.0	552.6	**BS06G04-../D04LA4**	11	3500	-
0.11	2.3	94*	1.0	610.7	**BS06G04-../D04LA4**	11	3500	-
0.11	2.0	94*	1.0	704.7	**BS06G04-../D04LA4**	11	3500	-
0.11	1.6	94*	1.0	847.0	**BS06G04-../D04LA4**	11	3500	-
0.11	1.5	94*	1.0	939.6	**BS06G04-../D04LA4**	11	3500	-
0.11	1.2	94*	1.0	1170	**BS06G04-../D04LA4**	11	3500	-
0.11	0.9	94*	1.0	1503	**BS06G04-../D04LA4**	11	3500	-
0.11	0.85	94*	1.0	1654	**BS06G04-../D04LA4**	11	3500	-
0.11	0.75	94*	1.0	1914	**BS06G04-../D04LA4**	11	3500	-
0.11	0.65	94*	1.0	2200	**BS06G04-../D04LA4**	11	3500	-
0.11	0.49	94*	1.0	2768	**BS06G04-../D04LA4**	11	3500	-
0.11	0.45	94*	1.0	3007	**BS06G04-../D04LA4**	11	3500	-
0.11	0.41	94*	1.0	3308	**BS06G04-../D04LA4**	11	3500	-
0.11	0.37	94*	1.0	3721	**BS06G04-../D04LA4**	11	3500	-
0.11	0.32	94*	1.0	4304	**BS06G04-../D04LA4**	11	3500	-
0.11	0.28	98*	1.0	4947	**BS06G04-../D04LA4**	11	3500	-
0.11	0.25	98*	1.0	5442	**BS06G04-../D04LA4**	11	3500	-
0.11	0.22	100*	1.0	6234	**BS06G04-../D04LA4**	11	3500	-
0.11	28	27	3.3	48.60	**BS06-../D04LA4**	8.4	3500	-
0.11	23.5	31.5	2.9	58.15	**BS06-../D04LA4**	8.4	3500	-
0.11	21.5	33	2.4	64.06	**BS06-../D04LA4**	8.4	3500	-
0.11	19	39	2.4	71.18	**BS06-../D04LA4**	8.4	3500	-
0.11	18	39	2.2	77.00	**BS06-../D04LA4**	8.4	3500	-
0.11	15	49	2.0	90.00	**BS06-../D04LA4**	8.4	3500	-
0.11	13.5	53	1.9	103.1	**BS06-../D04LA4**	8.4	3500	-
0.11	11.5	59	1.6	118.8	**BS06-../D04LA4**	8.4	3500	-
0.11	10.5	67	1.55	129.0	**BS06-../D04LA4**	8.4	3500	-
0.11	9.2	74	1.45	146.8	**BS06-../D04LA4**	8.4	3500	-
0.11	7.8	80	1.25	174.0	**BS06-../D04LA4**	8.4	3500	-
0.11	6.2	99	0.99	220.0	**BS06-../D04LA4**	8.4	3500	-
0.11	5.4	112	0.88	252.0	**BS06-../D04LA4**	8.4	3500	-
0.11	6.8	98	1.5	200.0	**BS10Z-../D04LA4**	21	6000	-
0.11	5.4	124	1.45	254.0	**BS10Z-../D04LA4**	21	6000	-
0.11	4.5	144	1.3	302.5	**BS10Z-../D04LA4**	21	6000	-
0.11	3.8	171	1.1	360.3	**BS10Z-../D04LA4**	21	6000	-
0.11	3.2	200	0.95	432.4	**BS10Z-../D04LA4**	21	6000	-
0.11	1.4	160*	1.0	969.9	**BS10G06-../D04LA4**	25	6000	-
0.11	1.2	160*	1.0	1166	**BS10G06-../D04LA4**	25	6000	-
0.11	1.1	160*	1.0	1342	**BS10G06-../D04LA4**	25	6000	-
0.11	0.9	160*	1.0	1528	**BS10G06-../D04LA4**	25	6000	-
0.11	0.85	160*	1.0	1668	**BS10G06-../D04LA4**	25	6000	-
0.11	0.7	160*	1.0	1963	**BS10G06-../D04LA4**	25	6000	-

The torques marked (*) are maximum permissible torques for service factor f_B=1.0.

0.11 kW

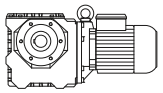

P_N	50 Hz			i	Type	m		
	n_2	M_2	f_B					
[kW]	[1/min]	[Nm]	[—]	[:1]		[kg]	[N]	[N]
0.11	0.6	160*	1.0	2348	**BS10G06-../D04LA4**	25	6000	-
0.11	0.55	160*	1.0	2635	**BS10G06-../D04LA4**	25	6000	-
0.11	0.47	160*	1.0	2875	**BS10G06-../D04LA4**	25	6000	-
0.11	0.41	160*	1.0	3332	**BS10G06-../D04LA4**	25	6000	-
0.11	0.38	160*	1.0	3635	**BS10G06-../D04LA4**	25	6000	-
0.11	0.33	160*	1.0	4163	**BS10G06-../D04LA4**	25	6000	-
0.11	0.29	160*	1.0	4776	**BS10G06-../D04LA4**	25	6000	-
0.11	0.26	160*	1.0	5209	**BS10G06-../D04LA4**	25	6000	-
0.11	0.23	164*	1.0	6019	**BS10G06-../D04LA4**	25	6000	-
0.11	0.21	164*	1.0	6565	**BS10G06-../D04LA4**	25	6000	-
0.11	0.19	164*	1.0	7471	**BS10G06-../D04LA4**	25	6000	-
0.11	0.16	164*	1.0	8703	**BS10G06-../D04LA4**	25	6000	-
0.11	6.8	98	2.9	201.4	**BS20Z-../D04LA4**	32	8000	-
0.11	5.3	126	2.3	257.8	**BS20Z-../D04LA4**	32	8000	-
0.11	4.5	147	2.0	300.1	**BS20Z-../D04LA4**	32	8000	-
0.11	3.8	171	1.85	359.9	**BS20Z-../D04LA4**	32	8000	-
0.11	3.2	200	1.65	430.8	**BS20Z-../D04LA4**	32	8000	-
0.11	2.6	220	1.65	539.7	**BS20Z-../D04LA4**	32	8000	-
0.11	2.2	255	1.3	619.2	**BS20Z-../D04LA4**	32	8000	-
0.11	1.8	315	0.98	763.4	**BS20Z-../D04LA4**	32	8000	-
0.11	1.7	270*	1.0	831.7	**BS20G06-../D04LA4**	35	8000	-
0.11	1.4	270*	1.0	1000	**BS20G06-../D04LA4**	35	8000	-
0.11	1.1	270*	1.0	1311	**BS20G06-../D04LA4**	35	8000	-
0.11	0.9	270*	1.0	1543	**BS20G06-../D04LA4**	35	8000	-
0.11	0.85	270*	1.0	1683	**BS20G06-../D04LA4**	35	8000	-
0.11	0.7	270*	1.0	2014	**BS20G06-../D04LA4**	35	8000	-
0.11	0.55	270*	1.0	2465	**BS20G06-../D04LA4**	35	8000	-
0.11	0.48	270*	1.0	2857	**BS20G06-../D04LA4**	35	8000	-
0.11	0.44	270*	1.0	3117	**BS20G06-../D04LA4**	35	8000	-
0.11	0.38	270*	1.0	3570	**BS20G06-../D04LA4**	35	8000	-
0.11	0.33	270*	1.0	4096	**BS20G06-../D04LA4**	35	8000	-
0.11	0.28	270*	1.0	4910	**BS20G06-../D04LA4**	35	8000	-
0.11	0.23	270*	1.0	5880	**BS20G06-../D04LA4**	35	8000	-
0.11	0.19	275*	1.0	7363	**BS20G06-../D04LA4**	35	8000	-
0.11	0.17	275*	1.0	8031	**BS20G06-../D04LA4**	35	8000	-
0.11	0.15	280*	1.0	9220	**BS20G06-../D04LA4**	35	8000	-
0.11	1.4	510	0.96	1022	**BS30G06-../D04LA4**	53	10000	-
0.11	1.2	600	0.82	1176	**BS30G06-../D04LA4**	53	10000	-
0.11	0.95	490*	1.0	1461	**BS30G06-../D04LA4**	53	10000	-
0.11	0.9	490*	1.0	1576	**BS30G06-../D04LA4**	53	10000	-
0.11	0.75	490*	1.0	1886	**BS30G06-../D04LA4**	53	10000	-
0.11	0.6	490*	1.0	2308	**BS30G06-../D04LA4**	53	10000	-
0.11	0.55	490*	1.0	2518	**BS30G06-../D04LA4**	53	10000	-
0.11	0.47	490*	1.0	2919	**BS30G06-../D04LA4**	53	10000	-
0.11	0.41	490*	1.0	3344	**BS30G06-../D04LA4**	53	10000	-
0.11	0.38	490*	1.0	3647	**BS30G06-../D04LA4**	53	10000	-
0.11	0.33	490*	1.0	4184	**BS30G06-../D04LA4**	53	10000	-
0.11	0.28	510*	1.0	4905	**BS30G06-../D04LA4**	53	10000	-
0.11	0.24	520*	1.0	5783	**BS30G06-../D04LA4**	53	10000	-
0.11	0.22	520*	1.0	6308	**BS30G06-../D04LA4**	53	10000	-
0.11	0.19	520*	1.0	7179	**BS30G06-../D04LA4**	53	10000	-
0.11	0.17	520*	1.0	8362	**BS30G06-../D04LA4**	53	10000	-

0.12 kW

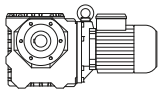

P_N	50 Hz			i	Type	m		
	n_2	M_2	f_B					
[kW]	[1/min]	[Nm]	[—]	[:1]		[kg]	[N]	[N]
0.12	310	3.25	4.6	4.60	**BS02-../DPE05LA4**	5.3	1000	-
0.12	265	3.8	5.3	5.40	**BS02-../DPE05LA4**	5.3	1000	-
0.12	210	4.65	5.4	6.75	**BS02-../DPE05LA4**	5.3	1000	-
0.12	171	5.6	4.5	8.25	**BS02-../DPE05LA4**	5.3	1100	-
0.12	132	7.1	3.5	10.67	**BS02-../DPE05LA4**	5.3	1250	-
0.12	105	8.5	2.9	13.50	**BS02-../DPE05LA4**	5.3	1250	-

The torques marked (*) are maximum permissible torques for service factor f_B=1.0.

0.12 kW

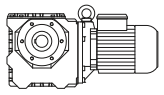

P_N	50 Hz			i	Type	m		
	n_2	M_2	f_B					
[kW]	[1/min]	[Nm]	[—]	[:1]		[kg]	[N]	[N]
0.12	79	10.7	2.3	18.00	**BS02-../DPE05LA4**	5.3	1250	-
0.12	64	12.5	2.0	22.00	**BS02-../DPE05LA4**	5.3	1250	-
0.12	53	13.6	1.85	27.00	**BS02-../DPE05LA4**	5.3	1250	-
0.12	43	15.9	1.55	33.00	**BS02-../DPE05LA4**	5.3	1250	-
0.12	33	21.5	1.1	43.00	**BS02-../DPE05LA4**	5.3	1250	-
0.12	26.5	24.5	0.9	54.00	**BS02-../DPE05LA4**	5.3	1250	-
0.12	36.5	20	2.8	39.00	**BS03-../DPE05LA4**	5.4	1950	-
0.12	28.5	23	2.4	50.00	**BS03-../DPE05LA4**	5.4	1950	-
0.12	23	26	1.85	62.00	**BS03-../DPE05LA4**	5.4	1950	-
0.12	19	30.5	1.3	75.00	**BS03-../DPE05LA4**	5.4	1950	-
0.12	79	10.2	3.3	18.00	**BS04-../DPE05LA4**	5.8	1950	-
0.12	68	12.8	2.9	20.96	**BS04-../DPE05LA4**	5.8	2100	-
0.12	58	15	2.3	24.25	**BS04-../DPE05LA4**	5.8	2250	-
0.12	54	15	2.5	26.21	**BS04-../DPE05LA4**	5.8	2250	-
0.12	45	17.8	2.1	31.50	**BS04-../DPE05LA4**	5.8	2250	-
0.12	37	21	1.75	38.42	**BS04-../DPE05LA4**	5.8	2250	-
0.12	29.5	26	1.45	47.86	**BS04-../DPE05LA4**	5.8	2250	-
0.12	23	33	1.15	61.50	**BS04-../DPE05LA4**	5.8	2250	-
0.12	22	32.5	1.1	64.06	**BS04-../DPE05LA4**	5.8	2250	-
0.12	20	37.5	1.0	71.18	**BS04-../DPE05LA4**	5.8	2250	-
0.12	18.5	37.5	1.0	77.00	**BS04-../DPE05LA4**	5.8	2250	-
0.12	16	46.5	0.82	90.00	**BS04-../DPE05LA4**	5.8	2250	-
0.12	15	45	0.84	93.92	**BS04-../DPE05LA4**	5.8	2250	-
0.12	29	28	3.1	48.60	**BS06-../DPE05LA4**	10	3500	-
0.12	24.5	33	2.8	58.15	**BS06-../DPE05LA4**	10	3500	-
0.12	22	35	2.3	64.06	**BS06-../DPE05LA4**	10	3500	-
0.12	20	40.5	2.3	71.18	**BS06-../DPE05LA4**	10	3500	-
0.12	18.5	41.5	2.0	77.00	**BS06-../DPE05LA4**	10	3500	-
0.12	16	50	1.95	90.00	**BS06-../DPE05LA4**	10	3500	-
0.12	14	56	1.8	103.1	**BS06-../DPE05LA4**	10	3500	-
0.12	12	62	1.5	118.8	**BS06-../DPE05LA4**	10	3500	-
0.12	11	69	1.5	129.0	**BS06-../DPE05LA4**	10	3500	-
0.12	9.6	77	1.4	146.8	**BS06-../DPE05LA4**	10	3500	-
0.12	8.1	84	1.15	174.0	**BS06-../DPE05LA4**	10	3500	-
0.12	6.4	105	0.93	220.0	**BS06-../DPE05LA4**	10	3500	-
0.12	5.6	118	0.84	252.0	**BS06-../DPE05LA4**	10	3500	-
0.12	17	49.5	3.0	84.36	**BS10-../DPE06LA4**	23	5300	-
0.12	14	52	3.1	103.4	**BS10-../DPE06LA4**	23	5600	-
0.12	12	70	1.75	119.6	**BS10-../DPE06LA4**	23	6000	-
0.12	11	66	2.5	130.3	**BS10-../DPE06LA4**	23	6000	-
0.12	9.2	79	2.1	152.7	**BS10-../DPE06LA4**	23	6000	-
0.12	7.5	97	1.75	188.6	**BS10-../DPE06LA4**	23	6000	-
0.12	6.5	112	1.6	216.6	**BS10-../DPE06LA4**	23	6000	-
0.12	5.6	130	1.4	254.0	**BS10Z-../DPE06LA4**	24	6000	-
0.12	4.7	151	1.25	302.5	**BS10Z-../DPE06LA4**	24	6000	-
0.12	3.9	182	1.05	360.3	**BS10Z-../DPE06LA4**	24	6000	-
0.12	3.3	210	0.9	432.4	**BS10Z-../DPE06LA4**	24	6000	-
0.12	1.5	160*	1.0	969.9	**BS10G06-../DPE06LA4**	28	6000	-
0.12	1.3	160*	1.0	1166	**BS10G06-../DPE06LA4**	28	6000	-
0.12	1.1	160*	1.0	1342	**BS10G06-../DPE06LA4**	28	6000	-
0.12	0.95	160*	1.0	1528	**BS10G06-../DPE06LA4**	28	6000	-
0.12	0.85	160*	1.0	1668	**BS10G06-../DPE06LA4**	28	6000	-
0.12	0.75	160*	1.0	1963	**BS10G06-../DPE06LA4**	28	6000	-
0.12	0.6	160*	1.0	2348	**BS10G06-../DPE06LA4**	28	6000	-
0.12	0.55	160*	1.0	2635	**BS10G06-../DPE06LA4**	28	6000	-
0.12	0.49	160*	1.0	2875	**BS10G06-../DPE06LA4**	28	6000	-
0.12	0.43	160*	1.0	3332	**BS10G06-../DPE06LA4**	28	6000	-
0.12	0.39	160*	1.0	3635	**BS10G06-../DPE06LA4**	28	6000	-
0.12	0.34	160*	1.0	4163	**BS10G06-../DPE06LA4**	28	6000	-
0.12	0.3	160*	1.0	4776	**BS10G06-../DPE06LA4**	28	6000	-
0.12	0.27	160*	1.0	5209	**BS10G06-../DPE06LA4**	28	6000	-
0.12	0.24	164*	1.0	6019	**BS10G06-../DPE06LA4**	28	6000	-
0.12	0.22	164*	1.0	6565	**BS10G06-../DPE06LA4**	28	6000	-
0.12	0.19	164*	1.0	7471	**BS10G06-../DPE06LA4**	28	6000	-
0.12	0.17	164*	1.0	8703	**BS10G06-../DPE06LA4**	28	6000	-

The torques marked (*) are maximum permissible torques for service factor f_B=1.0.

0.12 kW

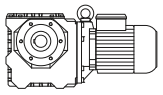

P_N	50 Hz			i	Type	m		
	n_2	M_2	f_B					
[kW]	[1/min]	[Nm]	[—]	[:1]		[kg]	[N]	[N]
0.12	8.8	85	3.2	159.4	**BS20-../DPE06LA4**	34	8000	-
0.12	7.7	98	2.9	183.0	**BS20-../DPE06LA4**	34	8000	-
0.12	6.3	116	2.5	225.6	**BS20-../DPE06LA4**	34	8000	-
0.12	5.5	133	2.2	257.8	**BS20Z-../DPE06LA4**	35	8000	-
0.12	4.7	153	1.95	300.1	**BS20Z-../DPE06LA4**	35	8000	-
0.12	3.9	182	1.75	359.9	**BS20Z-../DPE06LA4**	35	8000	-
0.12	3.3	210	1.55	430.8	**BS20Z-../DPE06LA4**	35	8000	-
0.12	2.6	240	1.5	539.7	**BS20Z-../DPE06LA4**	35	8000	-
0.12	2.3	265	1.25	619.2	**BS20Z-../DPE06LA4**	35	8000	-
0.12	1.9	325	0.95	763.4	**BS20Z-../DPE06LA4**	35	8000	-
0.12	1.7	270*	1.0	831.7	**BS20G06-../DPE06LA4**	38	8000	-
0.12	1.4	270*	1.0	1000	**BS20G06-../DPE06LA4**	38	8000	-
0.12	1.1	270*	1.0	1311	**BS20G06-../DPE06LA4**	38	8000	-
0.12	0.95	270*	1.0	1543	**BS20G06-../DPE06LA4**	38	8000	-
0.12	0.85	270*	1.0	1683	**BS20G06-../DPE06LA4**	38	8000	-
0.12	0.7	270*	1.0	2014	**BS20G06-../DPE06LA4**	38	8000	-
0.12	0.6	270*	1.0	2465	**BS20G06-../DPE06LA4**	38	8000	-
0.12	0.5	270*	1.0	2857	**BS20G06-../DPE06LA4**	38	8000	-
0.12	0.45	270*	1.0	3117	**BS20G06-../DPE06LA4**	38	8000	-
0.12	0.4	270*	1.0	3570	**BS20G06-../DPE06LA4**	38	8000	-
0.12	0.35	270*	1.0	4096	**BS20G06-../DPE06LA4**	38	8000	-
0.12	0.29	270*	1.0	4910	**BS20G06-../DPE06LA4**	38	8000	-
0.12	0.24	270*	1.0	5880	**BS20G06-../DPE06LA4**	38	8000	-
0.12	0.2	275*	1.0	7363	**BS20G06-../DPE06LA4**	38	8000	-
0.12	0.18	275*	1.0	8031	**BS20G06-../DPE06LA4**	38	8000	-
0.12	0.16	280*	1.0	9220	**BS20G06-../DPE06LA4**	38	8000	-
0.12	3.9	215	1.85	359.6	**BS30Z-../DPE06LA4**	54	10000	-
0.12	3.6	205	2.9	390.2	**BS30Z-../DPE06LA4**	54	10000	-
0.12	3.1	235	2.6	457.3	**BS30Z-../DPE06LA4**	54	10000	-
0.12	2.6	280	2.1	539.3	**BS30Z-../DPE06LA4**	54	10000	-
0.12	2.2	310	1.85	651.0	**BS30Z-../DPE06LA4**	54	10000	-
0.12	1.8	365	1.3	804.1	**BS30Z-../DPE06LA4**	54	10000	-
0.12	1.6	405	1.1	932.0	**BS30Z-../DPE06LA4**	54	10000	-
0.12	1.4	560	0.88	1022	**BS30G06-../DPE06LA4**	56	10000	-
0.12	1.2	490*	1.0	1176	**BS30G06-../DPE06LA4**	56	10000	-
0.12	1.0	490*	1.0	1461	**BS30G06-../DPE06LA4**	56	10000	-
0.12	0.9	490*	1.0	1576	**BS30G06-../DPE06LA4**	56	10000	-
0.12	0.75	490*	1.0	1886	**BS30G06-../DPE06LA4**	56	10000	-
0.12	0.65	490*	1.0	2308	**BS30G06-../DPE06LA4**	56	10000	-
0.12	0.6	490*	1.0	2518	**BS30G06-../DPE06LA4**	56	10000	-
0.12	0.48	490*	1.0	2919	**BS30G06-../DPE06LA4**	56	10000	-
0.12	0.42	490*	1.0	3344	**BS30G06-../DPE06LA4**	56	10000	-
0.12	0.39	490*	1.0	3647	**BS30G06-../DPE06LA4**	56	10000	-
0.12	0.34	490*	1.0	4184	**BS30G06-../DPE06LA4**	56	10000	-
0.12	0.29	510*	1.0	4905	**BS30G06-../DPE06LA4**	56	10000	-
0.12	0.25	520*	1.0	5783	**BS30G06-../DPE06LA4**	56	10000	-
0.12	0.23	520*	1.0	6308	**BS30G06-../DPE06LA4**	56	10000	-
0.12	0.2	520*	1.0	7179	**BS30G06-../DPE06LA4**	56	10000	-
0.12	0.17	520*	1.0	8362	**BS30G06-../DPE06LA4**	56	10000	-
0.12	2.3	300	3.0	612.1	**BS40Z-../DPE06LA4**	68	15000	-
0.12	2.0	340	2.2	736.5	**BS40Z-../DPE06LA4**	68	15000	-
0.12	1.6	420	1.75	908.2	**BS40Z-../DPE06LA4**	68	15000	-
0.12	1.5	530	1.65	965.5	**BS40G10-../DPE06LA4**	73	15000	-
0.12	1.2	660	1.35	1180	**BS40G10-../DPE06LA4**	73	15000	-
0.12	0.95	840	1.05	1499	**BS40G10-../DPE06LA4**	73	15000	-
0.12	0.8	880*	1.0	1785	**BS40G10-../DPE06LA4**	73	15000	-
0.12	0.7	880*	1.0	2126	**BS40G10-../DPE06LA4**	73	15000	-
0.12	0.65	880*	1.0	2304	**BS40G10-../DPE06LA4**	73	15000	-
0.12	0.55	880*	1.0	2552	**BS40G10-../DPE06LA4**	73	15000	-
0.12	0.49	880*	1.0	2902	**BS40G10-../DPE06LA4**	73	15000	-
0.12	0.44	880*	1.0	3215	**BS40G10-../DPE06LA4**	73	15000	-
0.12	0.38	880*	1.0	3769	**BS40G10-../DPE06LA4**	73	15000	-
0.12	0.34	880*	1.0	4201	**BS40G10-../DPE06LA4**	73	15000	-
0.12	0.31	880*	1.0	4655	**BS40G10-../DPE06LA4**	73	15000	-
0.12	0.26	900*	1.0	5498	**BS40G10-../DPE06LA4**	73	15000	-
0.12	0.23	950*	1.0	6214	**BS40G10-../DPE06LA4**	73	15000	-
0.12	0.21	950*	1.0	6885	**BS40G10-../DPE06LA4**	73	15000	-

The torques marked (*) are maximum permissible torques for service factor f_B=1.0.

0.12 kW

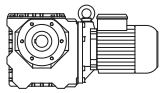

P_N	50 Hz			i	Type	m		
	n_2	M_2	f_B					
[kW]	[1/min]	[Nm]	[—]	[:1]		[kg]	[N]	[N]
0.12	0.18	950*	1.0	7905	**BS40G10-../DPE06LA4**	73	15000	-

0.18 kW

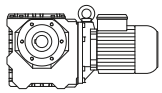

P_N	50 Hz			i	Type	m		
	n_2	M_2	f_B					
[kW]	[1/min]	[Nm]	[—]	[:1]		[kg]	[N]	[N]
0.18	305	4.95	3.0	4.60	**BS02-../DPE07LA4**	9.3	1000	-
0.18	260	5.8	3.4	5.40	**BS02-../DPE07LA4**	9.3	1000	-
0.18	210	7.0	3.6	6.75	**BS02-../DPE07LA4**	9.3	1000	-
0.18	170	8.4	3.0	8.25	**BS02-../DPE07LA4**	9.3	1100	-
0.18	132	10.6	2.4	10.67	**BS02-../DPE07LA4**	9.3	1250	-
0.18	104	12.8	1.95	13.50	**BS02-../DPE07LA4**	9.3	1250	-
0.18	78	16.3	1.55	18.00	**BS02-../DPE07LA4**	9.3	1250	-
0.18	64	18.8	1.35	22.00	**BS02-../DPE07LA4**	9.3	1250	-
0.18	52	20.5	1.2	27.00	**BS02-../DPE07LA4**	9.3	1250	-
0.18	42.5	24	1.05	33.00	**BS02-../DPE07LA4**	9.3	1250	-
0.18	74	17.6	3.1	19.00	**BS03-../DPE07LA4**	9.4	1950	-
0.18	56	21	2.6	25.00	**BS03-../DPE07LA4**	9.4	1950	-
0.18	42.5	24.5	2.2	33.00	**BS03-../DPE07LA4**	9.4	1950	-
0.18	36	30.5	1.8	39.00	**BS03-../DPE07LA4**	9.4	1950	-
0.18	28	35.5	1.55	50.00	**BS03-../DPE07LA4**	9.4	1950	-
0.18	23	39.5	1.2	62.00	**BS03-../DPE07LA4**	9.4	1950	-
0.18	19	46	0.87	75.00	**BS03-../DPE07LA4**	9.4	1950	-
0.18	131	10.2	3.1	10.73	**BS04-../DPE07LA4**	9.8	1600	-
0.18	107	12.3	2.7	13.09	**BS04-../DPE07LA4**	9.8	1760	-
0.18	86	15.3	2.3	16.31	**BS04-../DPE07LA4**	9.8	1970	-
0.18	78	15.6	2.2	18.00	**BS04-../DPE07LA4**	9.8	1950	-
0.18	67	19.4	1.9	20.96	**BS04-../DPE07LA4**	9.8	2100	-
0.18	58	22.5	1.5	24.25	**BS04-../DPE07LA4**	9.8	2250	-
0.18	54	22.5	1.7	26.21	**BS04-../DPE07LA4**	9.8	2250	-
0.18	44.5	27	1.4	31.50	**BS04-../DPE07LA4**	9.8	2250	-
0.18	36.5	32	1.15	38.42	**BS04-../DPE07LA4**	9.8	2250	-
0.18	29.5	39.5	0.96	47.86	**BS04-../DPE07LA4**	9.8	2250	-
0.18	58	23.5	3.3	24.25	**BS06-../DPE07LA4**	14	2600	-
0.18	54	23	3.3	26.21	**BS06-../DPE07LA4**	14	3000	-
0.18	44.5	28	2.9	31.50	**BS06-../DPE07LA4**	14	3200	-
0.18	34	36	2.4	41.29	**BS06-../DPE07LA4**	14	3500	-
0.18	29	42.5	2.1	48.60	**BS06-../DPE07LA4**	14	3500	-
0.18	24.5	49.5	1.85	58.15	**BS06-../DPE07LA4**	14	3500	-
0.18	22	53	1.5	64.06	**BS06-../DPE07LA4**	14	3500	-
0.18	20	61	1.55	71.18	**BS06-../DPE07LA4**	14	3500	-
0.18	18.5	62	1.35	77.00	**BS06-../DPE07LA4**	14	3500	-
0.18	16	75	1.3	90.00	**BS06-../DPE07LA4**	14	3500	-
0.18	14	84	1.2	103.1	**BS06-../DPE07LA4**	14	3500	-
0.18	12	93	1.0	118.8	**BS06-../DPE07LA4**	14	3500	-
0.18	11	104	1.0	129.0	**BS06-../DPE07LA4**	14	3500	-
0.18	9.6	116	0.91	146.8	**BS06-../DPE07LA4**	14	3500	-
0.18	29.5	43.5	3.3	47.59	**BS10-../DPE07LA4**	26	4050	-
0.18	25	50	3.0	57.12	**BS10-../DPE07LA4**	26	4350	-
0.18	23.5	49	3.1	60.74	**BS10-../DPE07LA4**	26	4550	-
0.18	19.5	65	2.5	71.96	**BS10-../DPE07LA4**	26	5000	-
0.18	17	74	2.0	84.36	**BS10-../DPE07LA4**	26	5300	-
0.18	14	78	2.1	103.4	**BS10-../DPE07LA4**	26	5600	-
0.18	12	106	1.15	119.6	**BS10-../DPE07LA4**	26	6000	-
0.18	11	100	1.65	130.3	**BS10-../DPE07LA4**	26	6000	-
0.18	9.2	119	1.4	152.7	**BS10-../DPE07LA4**	26	6000	-
0.18	7.5	146	1.15	188.6	**BS10-../DPE07LA4**	26	6000	-
0.18	6.5	169	1.05	216.6	**BS10-../DPE07LA4**	26	6000	-
0.18	5.6	196	0.92	254.0	**BS10Z-../DPE07LA4**	27	6000	-
0.18	4.7	225	0.84	302.5	**BS10Z-../DPE07LA4**	27	6000	-

The torques marked (*) are maximum permissible torques for service factor f_B=1.0.

0.18 kW

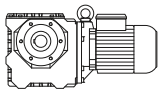

P_N	50 Hz			i	Type	m		
	n_2	M_2	f_B					
[kW]	[1/min]	[Nm]	[—]	[:1]		[kg]	[N]	[N]
0.18	13.5	84	3.2	106.3	**BS20-../DPE07LA4**	36	7600	-
0.18	11	103	2.6	127.3	**BS20-../DPE07LA4**	36	8000	-
0.18	8.8	128	2.1	159.4	**BS20-../DPE07LA4**	36	8000	-
0.18	7.7	147	1.9	183.0	**BS20-../DPE07LA4**	36	8000	-
0.18	6.3	174	1.65	225.6	**BS20-../DPE07LA4**	36	8000	-
0.18	5.5	200	1.5	257.8	**BS20Z-../DPE07LA4**	38	8000	-
0.18	4.7	230	1.3	300.1	**BS20Z-../DPE07LA4**	38	8000	-
0.18	3.9	270	1.2	359.9	**BS20Z-../DPE07LA4**	38	8000	-
0.18	3.3	315	1.05	430.8	**BS20Z-../DPE07LA4**	38	8000	-
0.18	2.6	360	1.0	539.7	**BS20Z-../DPE07LA4**	38	8000	-
0.18	2.3	400	0.83	619.2	**BS20Z-../DPE07LA4**	38	8000	-
0.18	6.5	174	3.0	216.4	**BS30-../DPE07LA4**	54	10000	-
0.18	5.4	210	2.7	261.6	**BS30Z-../DPE07LA4**	56	10000	-
0.18	4.6	240	2.4	306.6	**BS30Z-../DPE07LA4**	56	10000	-
0.18	3.9	325	1.2	359.6	**BS30Z-../DPE07LA4**	56	10000	-
0.18	3.6	310	1.9	390.2	**BS30Z-../DPE07LA4**	56	10000	-
0.18	3.1	350	1.7	457.3	**BS30Z-../DPE07LA4**	56	10000	-
0.18	2.6	420	1.45	539.3	**BS30Z-../DPE07LA4**	56	10000	-
0.18	2.2	465	1.25	651.0	**BS30Z-../DPE07LA4**	56	10000	-
0.18	1.8	550	0.87	804.1	**BS30Z-../DPE07LA4**	56	10000	-
0.18	4.9	255	2.8	287.7	**BS40Z-../DPE07LA4**	70	15000	-
0.18	3.2	335	3.0	446.8	**BS40Z-../DPE07LA4**	70	15000	-
0.18	2.7	400	2.8	520.8	**BS40Z-../DPE07LA4**	70	15000	-
0.18	2.3	455	2.0	612.1	**BS40Z-../DPE07LA4**	70	15000	-
0.18	2.0	510	1.5	736.5	**BS40Z-../DPE07LA4**	70	15000	-
0.18	1.6	630	1.2	908.2	**BS40Z-../DPE07LA4**	70	15000	-
0.18	1.5	800	1.1	965.5	**BS40G10-../DPE07LA4**	76	15000	-
0.18	1.2	1000	0.88	1180	**BS40G10-../DPE07LA4**	76	15000	-

0.25 kW

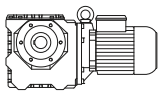

P_N	50 Hz			i	Type	m		
	n_2	M_2	f_B					
[kW]	[1/min]	[Nm]	[—]	[:1]		[kg]	[N]	[N]
0.25	315	6.6	6.1	4.60	**BS03-../DPE08MA4**	10	1070	-
0.25	240	8.7	5.1	6.00	**BS03-../DPE08MA4**	10	1170	-
0.25	180	11.4	4.2	8.00	**BS03-../DPE08MA4**	10	1320	-
0.25	144	13.9	3.7	10.00	**BS03-../DPE08MA4**	10	1450	-
0.25	107	17.4	3.2	13.50	**BS03-../DPE08MA4**	10	1600	-
0.25	76	23.5	2.3	19.00	**BS03-../DPE08MA4**	10	1950	-
0.25	58	28	1.95	25.00	**BS03-../DPE08MA4**	10	1950	-
0.25	44	33	1.65	33.00	**BS03-../DPE08MA4**	10	1950	-
0.25	37	41	1.35	39.00	**BS03-../DPE08MA4**	10	1950	-
0.25	29	47.5	1.15	50.00	**BS03-../DPE08MA4**	10	1950	-
0.25	87	21.5	3.3	16.56	**BS06-../DPE08MA4**	16	2400	-
0.25	73	26	2.9	19.82	**BS06-../DPE08MA4**	16	2500	-
0.25	60	31.5	2.4	24.25	**BS06-../DPE08MA4**	16	2600	-
0.25	55	31.5	2.4	26.21	**BS06-../DPE08MA4**	16	3000	-
0.25	46	37.5	2.1	31.50	**BS06-../DPE08MA4**	16	3200	-
0.25	35	49	1.75	41.29	**BS06-../DPE08MA4**	16	3500	-
0.25	30	57	1.55	48.60	**BS06-../DPE08MA4**	16	3500	-
0.25	25	67	1.35	58.15	**BS06-../DPE08MA4**	16	3500	-
0.25	22.5	72	1.1	64.06	**BS06-../DPE08MA4**	16	3500	-
0.25	20.5	82	1.15	71.18	**BS06-../DPE08MA4**	16	3500	-
0.25	19	84	1.0	77.00	**BS06-../DPE08MA4**	16	3500	-
0.25	16	104	0.94	90.00	**BS06-../DPE08MA4**	16	3500	-
0.25	14	117	0.85	103.1	**BS06-../DPE08MA4**	16	3500	-
0.25	43	42	3.2	33.55	**BS10-../DPE08MA4**	27	3550	-
0.25	36.5	49	2.9	39.96	**BS10-../DPE08MA4**	27	3800	-
0.25	30.5	58	2.5	47.59	**BS10-../DPE08MA4**	27	4050	-
0.25	25.5	69	2.2	57.12	**BS10-../DPE08MA4**	27	4350	-
0.25	24	66	2.3	60.74	**BS10-../DPE08MA4**	27	4550	-

The torques marked (*) are maximum permissible torques for service factor f_B=1.0.

0.25 kW

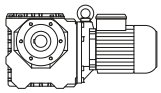

P_N	50 Hz			i	Type	m		
	n_2	M_2	f_B					
[kW]	[1/min]	[Nm]	[—]	[:1]		[kg]	[N]	[N]
0.25	20.5	86	1.85	71.96	**BS10-../DPE08MA4**	27	5000	-
0.25	17.5	100	1.5	84.36	**BS10-../DPE08MA4**	27	5300	-
0.25	14	109	1.45	103.4	**BS10-../DPE08MA4**	27	5600	-
0.25	11.5	132	1.25	130.3	**BS10-../DPE08MA4**	27	6000	-
0.25	9.5	160	1.05	152.7	**BS10-../DPE08MA4**	27	6000	-
0.25	7.7	198	0.86	188.6	**BS10-../DPE08MA4**	27	6000	-
0.25	19	82	3.3	76.18	**BS20-../DPE08MA4**	37	6600	-
0.25	16.5	95	2.8	88.67	**BS20-../DPE08MA4**	37	7000	-
0.25	14	112	2.4	106.3	**BS20-../DPE08MA4**	37	7600	-
0.25	11.5	137	1.95	127.3	**BS20-../DPE08MA4**	37	8000	-
0.25	9.1	173	1.6	159.4	**BS20-../DPE08MA4**	37	8000	-
0.25	7.9	199	1.4	183.0	**BS20-../DPE08MA4**	37	8000	-
0.25	6.4	235	1.25	225.6	**BS20-../DPE08MA4**	37	8000	-
0.25	5.6	270	1.1	257.8	**BS20Z-../DPE08MA4**	39	8000	-
0.25	4.8	310	0.97	300.1	**BS20Z-../DPE08MA4**	39	8000	-
0.25	4.1	360	0.89	359.9	**BS20Z-../DPE08MA4**	39	8000	-
0.25	9.6	166	3.3	151.1	**BS30-../DPE08MA4**	55	9500	-
0.25	7.8	200	2.7	186.7	**BS30-../DPE08MA4**	55	10000	-
0.25	6.7	235	2.2	216.4	**BS30-../DPE08MA4**	55	10000	-
0.25	5.6	280	2.0	261.6	**BS30Z-../DPE08MA4**	58	10000	-
0.25	4.7	330	1.75	306.6	**BS30Z-../DPE08MA4**	58	10000	-
0.25	4.1	430	0.92	359.6	**BS30Z-../DPE08MA4**	58	10000	-
0.25	3.7	415	1.4	390.2	**BS30Z-../DPE08MA4**	58	10000	-
0.25	3.2	475	1.25	457.3	**BS30Z-../DPE08MA4**	58	10000	-
0.25	2.7	560	1.05	539.3	**BS30Z-../DPE08MA4**	58	10000	-
0.25	2.3	620	0.93	651.0	**BS30Z-../DPE08MA4**	58	10000	-
0.25	7.4	235	3.0	197.1	**BS40Z-../DPE08MA4**	71	15000	-
0.25	5.1	345	2.1	287.7	**BS40Z-../DPE08MA4**	71	15000	-
0.25	4.1	365	3.0	356.8	**BS40Z-../DPE08MA4**	71	15000	-
0.25	3.3	455	2.2	446.8	**BS40Z-../DPE08MA4**	71	15000	-
0.25	2.8	530	2.1	520.8	**BS40Z-../DPE08MA4**	71	15000	-
0.25	2.4	600	1.5	612.1	**BS40Z-../DPE08MA4**	71	15000	-
0.25	2.0	710	1.05	736.5	**BS40Z-../DPE08MA4**	71	15000	-
0.25	1.6	880	0.84	908.2	**BS40Z-../DPE08MA4**	71	15000	-

0.37 kW

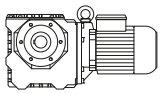

P_N	50 Hz			i	Type	m		
	n_2	M_2	f_B					
[kW]	[1/min]	[Nm]	[—]	[:1]		[kg]	[N]	[N]
0.37	315	9.8	4.1	4.60	**BS03-../DPE08LA4**	12	1070	-
0.37	245	12.6	3.5	6.00	**BS03-../DPE08LA4**	12	1170	-
0.37	181	16.7	2.9	8.00	**BS03-../DPE08LA4**	12	1320	-
0.37	145	20	2.6	10.00	**BS03-../DPE08LA4**	12	1450	-
0.37	108	25.5	2.2	13.50	**BS03-../DPE08LA4**	12	1600	-
0.37	77	34.5	1.6	19.00	**BS03-../DPE08LA4**	12	1950	-
0.37	58	42	1.3	25.00	**BS03-../DPE08LA4**	12	1950	-
0.37	44	48.5	1.15	33.00	**BS03-../DPE08LA4**	12	1950	-
0.37	37.5	60	0.92	39.00	**BS03-../DPE08LA4**	12	1950	-
0.37	135	21	3.1	10.73	**BS06-../DPE08LA4**	17	1850	-
0.37	103	27.5	2.5	14.07	**BS06-../DPE08LA4**	17	2200	-
0.37	88	32	2.3	16.56	**BS06-../DPE08LA4**	17	2400	-
0.37	73	38.5	1.95	19.82	**BS06-../DPE08LA4**	17	2500	-
0.37	60	47	1.65	24.25	**BS06-../DPE08LA4**	17	2600	-
0.37	56	46	1.65	26.21	**BS06-../DPE08LA4**	17	3000	-
0.37	46	56	1.45	31.50	**BS06-../DPE08LA4**	17	3200	-
0.37	35	72	1.2	41.29	**BS06-../DPE08LA4**	17	3500	-
0.37	30	84	1.05	48.60	**BS06-../DPE08LA4**	17	3500	-
0.37	25	100	0.91	58.15	**BS06-../DPE08LA4**	17	3500	-
0.37	67	42	3.0	21.61	**BS10-../DPE08LA4**	28	3000	-
0.37	64	38	3.1	22.60	**BS10-../DPE08LA4**	28	3200	-

The torques marked (*) are maximum permissible torques for service factor f_B=1.0.

0.37 kW

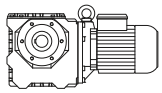

P_N	50 Hz			i	Type	m		
	n_2	M_2	f_B					
[kW]	[1/min]	[Nm]	[—]	[:1]		[kg]	[N]	[N]
0.37	55	50	2.6	26.42	**BS10-../DPE08LA4**	28	3250	-
0.37	47.5	51	2.5	30.63	**BS10-../DPE08LA4**	28	3550	-
0.37	43.5	61	2.2	33.55	**BS10-../DPE08LA4**	28	3550	-
0.37	36.5	72	1.95	39.96	**BS10-../DPE08LA4**	28	3800	-
0.37	30.5	86	1.7	47.59	**BS10-../DPE08LA4**	28	4050	-
0.37	25.5	102	1.45	57.12	**BS10-../DPE08LA4**	28	4350	-
0.37	24	98	1.55	60.74	**BS10-../DPE08LA4**	28	4550	-
0.37	20.5	127	1.25	71.96	**BS10-../DPE08LA4**	28	5000	-
0.37	17.5	149	1.0	84.36	**BS10-../DPE08LA4**	28	5300	-
0.37	14	161	0.99	103.4	**BS10-../DPE08LA4**	28	5600	-
0.37	11.5	196	0.84	130.3	**BS10-../DPE08LA4**	28	6000	-
0.37	30	88	3.1	48.98	**BS20-../DPE08LA4**	39	5500	-
0.37	29	81	3.3	50.44	**BS20-../DPE08LA4**	39	5700	-
0.37	25	106	2.6	58.74	**BS20-../DPE08LA4**	39	5900	-
0.37	21	126	2.4	70.30	**BS20-../DPE08LA4**	39	6300	-
0.37	19	122	2.2	76.18	**BS20-../DPE08LA4**	39	6600	-
0.37	16.5	141	1.9	88.67	**BS20-../DPE08LA4**	39	7000	-
0.37	14	166	1.65	106.3	**BS20-../DPE08LA4**	39	7600	-
0.37	11.5	200	1.35	127.3	**BS20-../DPE08LA4**	39	8000	-
0.37	9.1	255	1.1	159.4	**BS20-../DPE08LA4**	39	8000	-
0.37	7.9	295	0.95	183.0	**BS20-../DPE08LA4**	39	8000	-
0.37	6.5	345	0.84	225.6	**BS20-../DPE08LA4**	39	8000	-
0.37	17.5	155	2.6	83.48	**BS30-../DPE08LA4**	56	6800	-
0.37	16	152	3.2	90.59	**BS30-../DPE08LA4**	56	7700	-
0.37	14	171	3.0	106.2	**BS30-../DPE08LA4**	56	8200	-
0.37	12	200	2.6	125.2	**BS30-../DPE08LA4**	56	8700	-
0.37	9.6	245	2.2	151.1	**BS30-../DPE08LA4**	56	9500	-
0.37	7.8	295	1.85	186.7	**BS30-../DPE08LA4**	56	10000	-
0.37	6.7	345	1.5	216.4	**BS30-../DPE08LA4**	56	10000	-
0.37	5.6	415	1.35	261.6	**BS30Z-../DPE08LA4**	59	10000	-
0.37	4.8	475	1.2	306.6	**BS30Z-../DPE08LA4**	59	10000	-
0.37	3.8	600	0.98	390.2	**BS30Z-../DPE08LA4**	59	10000	-
0.37	3.2	700	0.86	457.3	**BS30Z-../DPE08LA4**	59	10000	-
0.37	8.2	280	2.9	178.2	**BS40-../DPE08LA4**	69	15000	-
0.37	6.6	335	2.4	219.7	**BS40-../DPE08LA4**	69	15000	-
0.37	5.8	380	2.4	249.6	**BS40Z-../DPE08LA4**	73	15000	-
0.37	5.1	510	1.4	287.7	**BS40Z-../DPE08LA4**	73	15000	-
0.37	4.8	460	2.3	302.1	**BS40Z-../DPE08LA4**	73	15000	-
0.37	4.1	540	2.0	356.8	**BS40Z-../DPE08LA4**	73	15000	-
0.37	3.3	670	1.5	446.8	**BS40Z-../DPE08LA4**	73	15000	-
0.37	2.8	790	1.4	520.8	**BS40Z-../DPE08LA4**	73	15000	-
0.37	2.4	890	1.0	612.1	**BS40Z-../DPE08LA4**	73	15000	-

0.55 kW

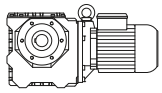

P_N	50 Hz			i	Type	m		
	n_2	M_2	f_B					
[kW]	[1/min]	[Nm]	[—]	[:1]		[kg]	[N]	[N]
0.55	315	14.6	2.7	4.60	**BS03-../DPE08XA4**	13	1070	-
0.55	240	19.2	2.3	6.00	**BS03-../DPE08XA4**	13	1170	-
0.55	179	25	1.9	8.00	**BS03-../DPE08XA4**	13	1320	-
0.55	143	30.5	1.7	10.00	**BS03-../DPE08XA4**	13	1450	-
0.55	106	38.5	1.45	13.50	**BS03-../DPE08XA4**	13	1600	-
0.55	76	52	1.05	19.00	**BS03-../DPE08XA4**	13	1950	-
0.55	58	62	0.89	25.00	**BS03-../DPE08XA4**	13	1950	-
0.55	215	19.7	2.8	6.67	**BS06-../DPE08XA4**	18	1550	-
0.55	161	26	2.4	8.93	**BS06-../DPE08XA4**	18	1710	-
0.55	134	31.5	2.1	10.73	**BS06-../DPE08XA4**	18	1850	-
0.55	102	41.5	1.65	14.07	**BS06-../DPE08XA4**	18	2200	-
0.55	87	48	1.5	16.56	**BS06-../DPE08XA4**	18	2400	-
0.55	73	57	1.3	19.82	**BS06-../DPE08XA4**	18	2500	-
0.55	59	71	1.1	24.25	**BS06-../DPE08XA4**	18	2600	-

The torques marked (*) are maximum permissible torques for service factor f_B=1.0.

0.55 kW

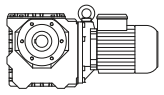

P_N	50 Hz			i	Type	m		
	n_2	M_2	f_B					
[kW]	[1/min]	[Nm]	[—]	[:1]		[kg]	[N]	[N]
0.55	55	69	1.1	26.21	**BS06-../DPE08XA4**	18	3000	-
0.55	45.5	84	0.95	31.50	**BS06-../DPE08XA4**	18	3200	-
0.55	35	108	0.8	41.29	**BS06-../DPE08XA4**	18	3500	-
0.55	115	36.5	3.0	12.49	**BS10-../DPE08XA4**	30	2400	-
0.55	85	49	2.4	16.92	**BS10-../DPE08XA4**	30	2700	-
0.55	67	62	2.0	21.61	**BS10-../DPE08XA4**	30	3000	-
0.55	64	56	2.1	22.60	**BS10-../DPE08XA4**	30	3200	-
0.55	55	74	1.75	26.42	**BS10-../DPE08XA4**	30	3250	-
0.55	47	77	1.7	30.63	**BS10-../DPE08XA4**	30	3550	-
0.55	43	92	1.45	33.55	**BS10-../DPE08XA4**	30	3550	-
0.55	36	109	1.3	39.96	**BS10-../DPE08XA4**	30	3800	-
0.55	30.5	129	1.1	47.59	**BS10-../DPE08XA4**	30	4050	-
0.55	25.5	152	0.99	57.12	**BS10-../DPE08XA4**	30	4350	-
0.55	24	146	1.05	60.74	**BS10-../DPE08XA4**	30	4550	-
0.55	20	194	0.82	71.96	**BS10-../DPE08XA4**	30	5000	-
0.55	52	78	3.2	27.86	**BS20-../DPE08XA4**	40	4450	-
0.55	47	80	3.1	30.63	**BS20-../DPE08XA4**	40	4750	-
0.55	44	91	3.0	32.87	**BS20-../DPE08XA4**	40	4750	-
0.55	36	105	2.5	40.25	**BS20-../DPE08XA4**	40	5300	-
0.55	34	117	2.3	42.08	**BS20-../DPE08XA4**	40	5200	-
0.55	29.5	133	2.0	48.98	**BS20-../DPE08XA4**	40	5500	-
0.55	28.5	123	2.2	50.44	**BS20-../DPE08XA4**	40	5700	-
0.55	24.5	160	1.75	58.74	**BS20-../DPE08XA4**	40	5900	-
0.55	20.5	192	1.55	70.30	**BS20-../DPE08XA4**	40	6300	-
0.55	19	182	1.5	76.18	**BS20-../DPE08XA4**	40	6600	-
0.55	16.5	210	1.3	88.67	**BS20-../DPE08XA4**	40	7000	-
0.55	14.5	265	0.94	101.1	**BS20-../DPE08XA4**	40	7100	-
0.55	13.5	255	1.05	106.3	**BS20-../DPE08XA4**	40	7600	-
0.55	11.5	300	0.9	127.3	**BS20-../DPE08XA4**	40	8000	-
0.55	29	139	3.2	50.04	**BS30-../DPE08XA4**	57	5900	-
0.55	24.5	165	2.8	58.64	**BS30-../DPE08XA4**	57	6900	-
0.55	20.5	179	2.7	71.17	**BS30-../DPE08XA4**	57	7000	-
0.55	17.5	230	1.8	83.48	**BS30-../DPE08XA4**	57	6800	-
0.55	16	225	2.2	90.59	**BS30-../DPE08XA4**	57	7700	-
0.55	13.5	260	1.95	106.2	**BS30-../DPE08XA4**	57	8200	-
0.55	11.5	310	1.7	125.2	**BS30-../DPE08XA4**	57	8700	-
0.55	9.5	370	1.45	151.1	**BS30-../DPE08XA4**	57	9500	-
0.55	7.7	450	1.2	186.7	**BS30-../DPE08XA4**	57	10000	-
0.55	6.7	510	1.0	216.4	**BS30-../DPE08XA4**	57	10000	-
0.55	5.5	630	0.89	261.6	**BS30Z-../DPE08XA4**	60	10000	-
0.55	4.7	720	0.81	306.6	**BS30Z-../DPE08XA4**	60	10000	-
0.55	11.5	305	3.2	126.0	**BS40-../DPE08XA4**	70	14900	-
0.55	9.7	350	2.8	148.1	**BS40-../DPE08XA4**	70	15000	-
0.55	8.1	420	1.95	178.2	**BS40-../DPE08XA4**	70	15000	-
0.55	6.6	500	1.6	219.7	**BS40-../DPE08XA4**	70	15000	-
0.55	5.8	570	1.6	249.6	**BS40Z-../DPE08XA4**	74	15000	-
0.55	5.0	770	0.93	287.7	**BS40Z-../DPE08XA4**	74	15000	-
0.55	4.8	680	1.55	302.1	**BS40Z-../DPE08XA4**	74	15000	-
0.55	4.1	800	1.35	356.8	**BS40Z-../DPE08XA4**	74	15000	-
0.55	3.3	1000	0.99	446.8	**BS40Z-../DPE08XA4**	74	15000	-
0.55	2.8	1180	0.93	520.8	**BS40Z-../DPE08XA4**	74	15000	-

0.75 kW

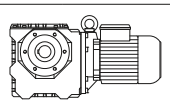

P_N	50 Hz			i	Type	m		
	n_2	M_2	f_B					
[kW]	[1/min]	[Nm]	[—]	[:1]		[kg]	[N]	[N]
0.75	310	20	2.0	4.60	**BS03-../DPE08XB4**	13	1070	-
0.75	240	26	1.7	6.00	**BS03-../DPE08XB4**	13	1170	-
0.75	179	34	1.4	8.00	**BS03-../DPE08XB4**	13	1320	-
0.75	143	42	1.25	10.00	**BS03-../DPE08XB4**	13	1450	-
0.75	106	52	1.05	13.50	**BS03-../DPE08XB4**	13	1600	-

The torques marked (*) are maximum permissible torques for service factor f_B=1.0.

0.75 kW

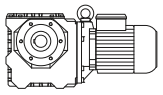

P_N	50 Hz			i	Type	m		
	n_2	M_2	f_B					
[kW]	[1/min]	[Nm]	[—]	[:1]		[kg]	[N]	[N]
0.75	215	26.5	2.1	6.67	**BS06-../DPE08XB4**	19	1550	-
0.75	160	36	1.7	8.93	**BS06-../DPE08XB4**	19	1710	-
0.75	133	43.5	1.5	10.73	**BS06-../DPE08XB4**	19	1850	-
0.75	102	56	1.2	14.07	**BS06-../DPE08XB4**	19	2200	-
0.75	87	65	1.1	16.56	**BS06-../DPE08XB4**	19	2400	-
0.75	72	79	0.95	19.82	**BS06-../DPE08XB4**	19	2500	-
0.75	55	95	0.81	26.21	**BS06-../DPE08XB4**	19	3000	-
0.75	115	49.5	2.2	12.49	**BS10-../DPE08XB4**	30	2400	-
0.75	85	67	1.8	16.92	**BS10-../DPE08XB4**	30	2700	-
0.75	66	86	1.45	21.61	**BS10-../DPE08XB4**	30	3000	-
0.75	64	77	1.5	22.60	**BS10-../DPE08XB4**	30	3200	-
0.75	54	103	1.25	26.42	**BS10-../DPE08XB4**	30	3250	-
0.75	47	105	1.25	30.63	**BS10-../DPE08XB4**	30	3550	-
0.75	42.5	128	1.05	33.55	**BS10-../DPE08XB4**	30	3550	-
0.75	36	149	0.94	39.96	**BS10-../DPE08XB4**	30	3800	-
0.75	30	179	0.81	47.59	**BS10-../DPE08XB4**	30	4050	-
0.75	85	68	3.2	16.92	**BS20-../DPE08XB4**	40	3700	-
0.75	65	89	2.6	22.23	**BS20-../DPE08XB4**	40	4100	-
0.75	62	83	2.7	23.13	**BS20-../DPE08XB4**	40	4300	-
0.75	52	107	2.3	27.86	**BS20-../DPE08XB4**	40	4450	-
0.75	47	109	2.3	30.63	**BS20-../DPE08XB4**	40	4750	-
0.75	43.5	126	2.1	32.87	**BS20-../DPE08XB4**	40	4750	-
0.75	35.5	145	1.8	40.25	**BS20-../DPE08XB4**	40	5300	-
0.75	34	160	1.7	42.08	**BS20-../DPE08XB4**	40	5200	-
0.75	29.5	182	1.5	48.98	**BS20-../DPE08XB4**	40	5500	-
0.75	28.5	168	1.6	50.44	**BS20-../DPE08XB4**	40	5700	-
0.75	24.5	215	1.3	58.74	**BS20-../DPE08XB4**	40	5900	-
0.75	20.5	260	1.15	70.30	**BS20-../DPE08XB4**	40	6300	-
0.75	19	245	1.1	76.18	**BS20-../DPE08XB4**	40	6600	-
0.75	16.5	285	0.95	88.67	**BS20-../DPE08XB4**	40	7000	-
0.75	42.5	138	3.0	33.55	**BS30-../DPE08XB4**	58	5200	-
0.75	38	141	3.0	37.92	**BS30-../DPE08XB4**	58	5500	-
0.75	36.5	158	2.7	39.31	**BS30-../DPE08XB4**	58	5500	-
0.75	28.5	193	2.3	50.04	**BS30-../DPE08XB4**	58	5900	-
0.75	24.5	225	2.0	58.64	**BS30-../DPE08XB4**	58	6900	-
0.75	20.5	240	2.0	71.17	**BS30-../DPE08XB4**	58	7000	-
0.75	17.5	315	1.3	83.48	**BS30-../DPE08XB4**	58	6800	-
0.75	16	305	1.6	90.59	**BS30-../DPE08XB4**	58	7700	-
0.75	13.5	360	1.4	106.2	**BS30-../DPE08XB4**	58	8200	-
0.75	11.5	420	1.25	125.2	**BS30-../DPE08XB4**	58	8700	-
0.75	9.5	500	1.1	151.1	**BS30-../DPE08XB4**	58	9500	-
0.75	7.7	610	0.89	186.7	**BS30-../DPE08XB4**	58	10000	-
0.75	20.5	265	2.8	69.60	**BS40-../DPE08XB4**	71	11800	-
0.75	17	290	3.1	86.33	**BS40-../DPE08XB4**	71	12900	-
0.75	13.5	355	2.7	108.1	**BS40-../DPE08XB4**	71	14000	-
0.75	11.5	415	2.4	126.0	**BS40-../DPE08XB4**	71	14900	-
0.75	9.7	475	2.0	148.1	**BS40-../DPE08XB4**	71	15000	-
0.75	8.0	580	1.4	178.2	**BS40-../DPE08XB4**	71	15000	-
0.75	6.5	690	1.15	219.7	**BS40-../DPE08XB4**	71	15000	-
0.75	5.8	770	1.15	249.6	**BS40Z-../DPE08XB4**	74	15000	-
0.75	4.8	940	1.15	302.1	**BS40Z-../DPE08XB4**	74	15000	-
0.75	4.0	1120	0.96	356.8	**BS40Z-../DPE08XB4**	74	15000	-

1.1 kW

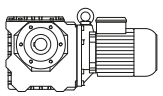

P_N	50 Hz			i	Type	m		
	n_2	M_2	f_B					
[kW]	[1/min]	[Nm]	[—]	[:1]		[kg]	[N]	[N]
1.1	116	72	1.5	12.49	**BS10-../DPE09XA4**	40	2400	-
1.1	86	97	1.25	16.92	**BS10-../DPE09XA4**	40	2700	-
1.1	67	125	1.0	21.61	**BS10-../DPE09XA4**	40	3000	-
1.1	64	113	1.05	22.60	**BS10-../DPE09XA4**	40	3200	-

The torques marked (*) are maximum permissible torques for service factor f_B=1.0.

1.1 kW

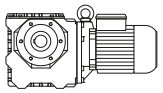

P_N	50 Hz			i	Type	m		
	n_2	M_2	f_B					
[kW]	[1/min]	[Nm]	[—]	[:1]		[kg]	[N]	[N]
1.1	55	148	0.88	26.42	**BS10-../DPE09XA4**	40	3250	-
1.1	47.5	152	0.86	30.63	**BS10-../DPE09XA4**	40	3550	-
1.1	113	75	2.7	12.77	**BS20-../DPE09XA4**	50	3350	-
1.1	86	98	2.2	16.92	**BS20-../DPE09XA4**	50	3700	-
1.1	65	130	1.75	22.23	**BS20-../DPE09XA4**	50	4100	-
1.1	63	120	1.9	23.13	**BS20-../DPE09XA4**	50	4300	-
1.1	52	157	1.6	27.86	**BS20-../DPE09XA4**	50	4450	-
1.1	47.5	159	1.55	30.63	**BS20-../DPE09XA4**	50	4750	-
1.1	44	183	1.5	32.87	**BS20-../DPE09XA4**	50	4750	-
1.1	36	210	1.25	40.25	**BS20-../DPE09XA4**	50	5300	-
1.1	34.5	230	1.15	42.08	**BS20-../DPE09XA4**	50	5200	-
1.1	29	240	1.15	50.44	**BS20-../DPE09XA4**	50	5700	-
1.1	25	315	0.89	58.74	**BS20-../DPE09XA4**	50	5900	-
1.1	69	126	3.0	20.94	**BS30-../DPE09XA4**	68	4300	-
1.1	60	131	2.8	24.06	**BS30-../DPE09XA4**	68	4600	-
1.1	54	161	2.5	27.07	**BS30-../DPE09XA4**	68	4750	-
1.1	47.5	165	2.4	30.63	**BS30-../DPE09XA4**	68	5000	-
1.1	43	200	2.1	33.55	**BS30-../DPE09XA4**	68	5200	-
1.1	38	205	2.0	37.92	**BS30-../DPE09XA4**	68	5500	-
1.1	37	225	1.9	39.31	**BS30-../DPE09XA4**	68	5500	-
1.1	29	275	1.65	50.04	**BS30-../DPE09XA4**	68	5900	-
1.1	25	320	1.45	58.64	**BS30-../DPE09XA4**	68	6900	-
1.1	20.5	355	1.35	71.17	**BS30-../DPE09XA4**	68	7000	-
1.1	17.5	460	0.89	83.48	**BS30-../DPE09XA4**	68	6800	-
1.1	16	450	1.1	90.59	**BS30-../DPE09XA4**	68	7700	-
1.1	14	510	1.0	106.2	**BS30-../DPE09XA4**	68	8200	-
1.1	12	590	0.88	125.2	**BS30-../DPE09XA4**	68	8700	-
1.1	30.5	265	3.1	47.69	**BS40-../DPE09XA4**	81	9600	-
1.1	24	310	2.8	60.38	**BS40-../DPE09XA4**	81	11200	-
1.1	21	385	1.95	69.60	**BS40-../DPE09XA4**	81	11800	-
1.1	20	365	2.4	73.09	**BS40-../DPE09XA4**	81	12100	-
1.1	17	425	2.1	86.33	**BS40-../DPE09XA4**	81	12900	-
1.1	13.5	520	1.85	108.1	**BS40-../DPE09XA4**	81	14000	-
1.1	11.5	610	1.6	126.0	**BS40-../DPE09XA4**	81	14900	-
1.1	9.8	690	1.4	148.1	**BS40-../DPE09XA4**	81	15000	-
1.1	8.1	840	0.98	178.2	**BS40-../DPE09XA4**	81	15000	-

1.5 kW

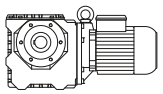

P_N	50 Hz			i	Type	m		
	n_2	M_2	f_B					
[kW]	[1/min]	[Nm]	[—]	[:1]		[kg]	[N]	[N]
1.5	115	99	1.1	12.49	**BS10-../DPE09XB4**	40	2400	-
1.5	85	134	0.9	16.92	**BS10-../DPE09XB4**	40	2700	-
1.5	113	102	1.95	12.77	**BS20-../DPE09XB4**	50	3350	-
1.5	85	136	1.6	16.92	**BS20-../DPE09XB4**	50	3700	-
1.5	65	178	1.3	22.23	**BS20-../DPE09XB4**	50	4100	-
1.5	63	163	1.4	23.13	**BS20-../DPE09XB4**	50	4300	-
1.5	52	210	1.2	27.86	**BS20-../DPE09XB4**	50	4450	-
1.5	47	215	1.15	30.63	**BS20-../DPE09XB4**	50	4750	-
1.5	44	250	1.1	32.87	**BS20-../DPE09XB4**	50	4750	-
1.5	36	285	0.91	40.25	**BS20-../DPE09XB4**	50	5300	-
1.5	34.5	315	0.86	42.08	**BS20-../DPE09XB4**	50	5200	-
1.5	28.5	335	0.81	50.44	**BS20-../DPE09XB4**	50	5700	-
1.5	108	110	3.0	13.29	**BS30-../DPE09XB4**	68	3600	-
1.5	85	139	2.6	16.92	**BS30-../DPE09XB4**	68	3950	-
1.5	69	172	2.2	20.94	**BS30-../DPE09XB4**	68	4300	-
1.5	60	179	2.1	24.06	**BS30-../DPE09XB4**	68	4600	-
1.5	54	220	1.8	27.07	**BS30-../DPE09XB4**	68	4750	-
1.5	47	225	1.8	30.63	**BS30-../DPE09XB4**	68	5000	-
1.5	43	270	1.55	33.55	**BS30-../DPE09XB4**	68	5200	-

The torques marked (*) are maximum permissible torques for service factor f_B=1.0.

1.5 kW

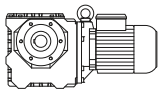

P_N	50 Hz			i	Type	m		
	n_2	M_2	f_B					
[kW]	[1/min]	[Nm]	[—]	[:1]		[kg]	[N]	[N]
1.5	38	280	1.5	37.92	**BS30-../DPE09XB4**	68	5500	-
1.5	37	310	1.4	39.31	**BS30-../DPE09XB4**	68	5500	-
1.5	29	380	1.2	50.04	**BS30-../DPE09XB4**	68	5900	-
1.5	24.5	450	1.0	58.64	**BS30-../DPE09XB4**	68	6900	-
1.5	20.5	485	0.99	71.17	**BS30-../DPE09XB4**	68	7000	-
1.5	16	610	0.8	90.59	**BS30-../DPE09XB4**	68	7700	-
1.5	47	225	3.3	30.63	**BS40-../DPE09XB4**	81	8700	-
1.5	43.5	260	3.0	33.35	**BS40-../DPE09XB4**	81	8300	-
1.5	38	275	2.8	38.13	**BS40-../DPE09XB4**	81	9400	-
1.5	36	310	2.6	40.37	**BS40-../DPE09XB4**	81	9000	-
1.5	30.5	365	2.3	47.69	**BS40-../DPE09XB4**	81	9600	-
1.5	24	420	2.0	60.38	**BS40-../DPE09XB4**	81	11200	-
1.5	21	520	1.45	69.60	**BS40-../DPE09XB4**	81	11800	-
1.5	20	500	1.75	73.09	**BS40-../DPE09XB4**	81	12100	-
1.5	17	580	1.55	86.33	**BS40-../DPE09XB4**	81	12900	-
1.5	13.5	710	1.35	108.1	**BS40-../DPE09XB4**	81	14000	-
1.5	11.5	830	1.2	126.0	**BS40-../DPE09XB4**	81	14900	-
1.5	9.7	950	1.0	148.1	**BS40-../DPE09XB4**	81	15000	-

2.2 kW

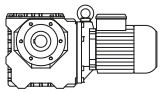

P_N	50 Hz			i	Type	m		
	n_2	M_2	f_B					
[kW]	[1/min]	[Nm]	[—]	[:1]		[kg]	[N]	[N]
2.2	114	149	1.35	12.77	**BS20-../DPE09XB4C**	50	3350	-
2.2	86	197	1.1	16.92	**BS20-../DPE09XB4C**	50	3700	-
2.2	66	255	0.9	22.23	**BS20-../DPE09XB4C**	50	4100	-
2.2	63	240	0.95	23.13	**BS20-../DPE09XB4C**	50	4300	-
2.2	53	305	0.82	27.86	**BS20-../DPE09XB4C**	50	4450	-
2.2	110	158	2.1	13.29	**BS30-../DPE09XB4C**	68	3600	-
2.2	86	200	1.8	16.92	**BS30-../DPE09XB4C**	68	3950	-
2.2	70	245	1.55	20.94	**BS30-../DPE09XB4C**	68	4300	-
2.2	61	255	1.45	24.06	**BS30-../DPE09XB4C**	68	4600	-
2.2	54	320	1.25	27.07	**BS30-../DPE09XB4C**	68	4750	-
2.2	47.5	330	1.2	30.63	**BS30-../DPE09XB4C**	68	5000	-
2.2	43.5	395	1.05	33.55	**BS30-../DPE09XB4C**	68	5200	-
2.2	38.5	405	1.05	37.92	**BS30-../DPE09XB4C**	68	5500	-
2.2	37	455	0.95	39.31	**BS30-../DPE09XB4C**	68	5500	-
2.2	29	550	0.82	50.04	**BS30-../DPE09XB4C**	68	5900	-
2.2	86	205	3.3	16.92	**BS40-../DPE09XB4C**	81	6400	-
2.2	69	245	2.9	21.06	**BS40-../DPE09XB4C**	81	6900	-
2.2	62	250	2.7	23.59	**BS40-../DPE09XB4C**	81	7900	-
2.2	56	305	2.4	26.18	**BS40-../DPE09XB4C**	81	7500	-
2.2	47.5	325	2.3	30.63	**BS40-../DPE09XB4C**	81	8700	-
2.2	43.5	385	2.0	33.35	**BS40-../DPE09XB4C**	81	8300	-
2.2	38.5	395	1.95	38.13	**BS40-../DPE09XB4C**	81	9400	-
2.2	36	460	1.75	40.37	**BS40-../DPE09XB4C**	81	9000	-
2.2	30.5	530	1.55	47.69	**BS40-../DPE09XB4C**	81	9600	-
2.2	24.5	600	1.45	60.38	**BS40-../DPE09XB4C**	81	11200	-
2.2	21	770	0.97	69.60	**BS40-../DPE09XB4C**	81	11800	-
2.2	20	730	1.2	73.09	**BS40-../DPE09XB4C**	81	12100	-
2.2	17	850	1.05	86.33	**BS40-../DPE09XB4C**	81	12900	-
2.2	13.5	1040	0.91	108.1	**BS40-../DPE09XB4C**	81	14000	-
2.2	12	1170	0.84	126.0	**BS40-../DPE09XB4C**	81	14900	-

The torques marked (*) are maximum permissible torques for service factor f_B=1.0.

3 kW

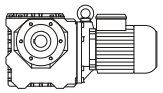

P_N	50 Hz			i	Type	m		
	n_2	M_2	f_B					
[kW]	[1/min]	[Nm]	[—]	[:1]		[kg]	[N]	[N]
3	110	215	1.55	13.29	**BS30-../DPE11LA4**	89	3600	-
3	86	275	1.3	16.92	**BS30-../DPE11LA4**	89	3950	-
3	70	335	1.15	20.94	**BS30-../DPE11LA4**	89	4300	-
3	61	350	1.05	24.06	**BS30-../DPE11LA4**	89	4600	-
3	54	440	0.91	27.07	**BS30-../DPE11LA4**	89	4750	-
3	48	445	0.9	30.63	**BS30-../DPE11LA4**	89	5000	-
3	112	215	2.9	13.03	**BS40-../DPE11LA4**	107	5800	-
3	86	280	2.4	16.92	**BS40-../DPE11LA4**	107	6400	-
3	70	335	2.1	21.06	**BS40-../DPE11LA4**	107	6900	-
3	62	340	2.0	23.59	**BS40-../DPE11LA4**	107	7900	-
3	56	415	1.8	26.18	**BS40-../DPE11LA4**	107	7500	-
3	48	440	1.7	30.63	**BS40-../DPE11LA4**	107	8700	-
3	44	520	1.5	33.35	**BS40-../DPE11LA4**	107	8300	-
3	38.5	540	1.45	38.13	**BS40-../DPE11LA4**	107	9400	-
3	36.5	620	1.3	40.37	**BS40-../DPE11LA4**	107	9000	-
3	31	720	1.15	47.69	**BS40-../DPE11LA4**	107	9600	-
3	24.5	830	1.05	60.38	**BS40-../DPE11LA4**	107	11200	-
3	20	1000	0.88	73.09	**BS40-../DPE11LA4**	107	12100	-

4 kW

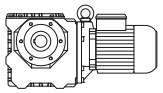

P_N	50 Hz			i	Type	m		
	n_2	M_2	f_B					
[kW]	[1/min]	[Nm]	[—]	[:1]		[kg]	[N]	[N]
4	110	285	1.15	13.29	**BS30-../DPE11LB4**	89	3600	-
4	86	365	0.99	16.92	**BS30-../DPE11LB4**	89	3950	-
4	70	450	0.84	20.94	**BS30-../DPE11LB4**	89	4300	-
4	112	285	2.2	13.03	**BS40-../DPE11LB4**	107	5800	-
4	86	375	1.8	16.92	**BS40-../DPE11LB4**	107	6400	-
4	69	450	1.6	21.06	**BS40-../DPE11LB4**	107	6900	-
4	62	455	1.5	23.59	**BS40-../DPE11LB4**	107	7900	-
4	56	550	1.35	26.18	**BS40-../DPE11LB4**	107	7500	-
4	47.5	590	1.25	30.63	**BS40-../DPE11LB4**	107	8700	-
4	43.5	700	1.1	33.35	**BS40-../DPE11LB4**	107	8300	-
4	38.5	720	1.1	38.13	**BS40-../DPE11LB4**	107	9400	-
4	36	830	0.96	40.37	**BS40-../DPE11LB4**	107	9000	-
4	30.5	970	0.86	47.69	**BS40-../DPE11LB4**	107	9600	-

5.5 kW

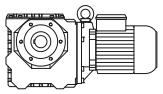

P_N	50 Hz			i	Type	m		
	n_2	M_2	f_B					
[kW]	[1/min]	[Nm]	[—]	[:1]		[kg]	[N]	[N]
5.5	111	390	0.85	13.29	**BS30-../DPE11LB4C**	93	3600	-
5.5	113	395	1.55	13.03	**BS40-../DPE11LB4C**	111	5800	-
5.5	87	510	1.3	16.92	**BS40-../DPE11LB4C**	111	6400	-
5.5	70	610	1.15	21.06	**BS40-../DPE11LB4C**	111	6900	-
5.5	63	610	1.15	23.59	**BS40-../DPE11LB4C**	111	7900	-
5.5	56	760	0.97	26.18	**BS40-../DPE11LB4C**	111	7500	-
5.5	48	800	0.94	30.63	**BS40-../DPE11LB4C**	111	8700	-
5.5	44	950	0.82	33.35	**BS40-../DPE11LB4C**	111	8300	-

The torques marked (*) are maximum permissible torques for service factor f_B=1.0.

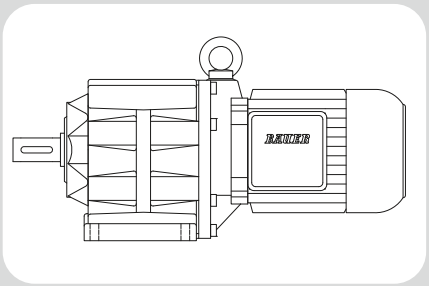

10

BG-series helical-geared motors - Dimensions

Dimension - Standard **479**
BG04 479
BG05 480
BG06 481
BG10-BG10Z 482
BG10X-BG10XZ 484
BG15 487
BG20-BG20Z 488
BG30-BG30Z 490
BG40-BG40Z 492
BG50-BG50Z 494
BG60-BG60Z 496
BG70-BG70Z 498
BG80-BG80Z 500
BG90-BG90Z 502
BG100-BG100Z 504
Dimension - Tandem Gearbox **507**
BG06G04 507
BG10G06 508
BG10XG06 510
BG20G06 512
BG30G06 514
BG40G10 516
BG50G10 518
BG60G20 520
BG70G20 522
BG80G40 524
BG90G50 526
BG100G50 528

BG04

Foot mounting

Code -11/

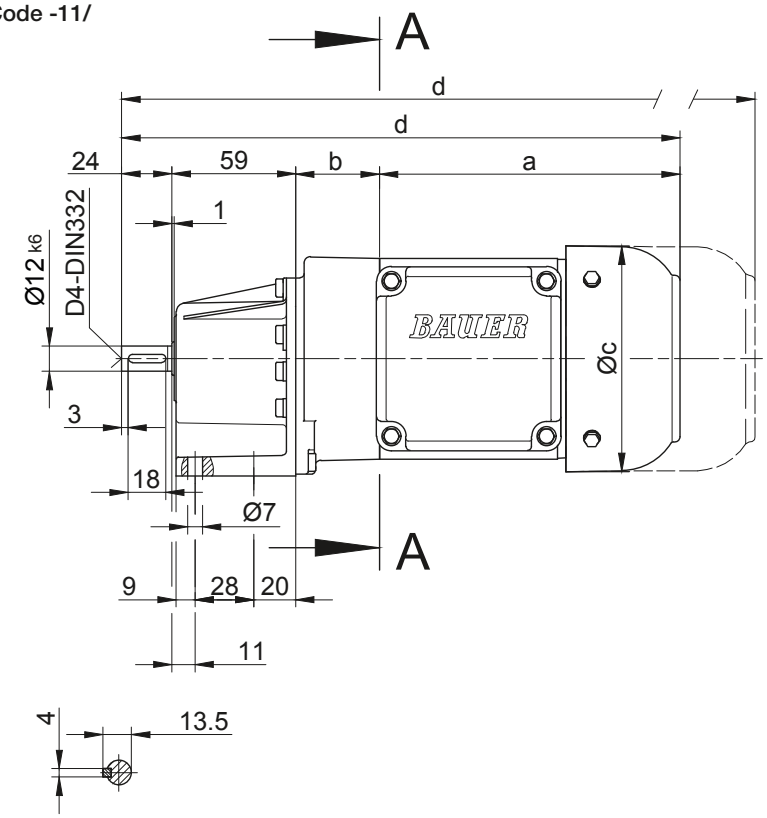

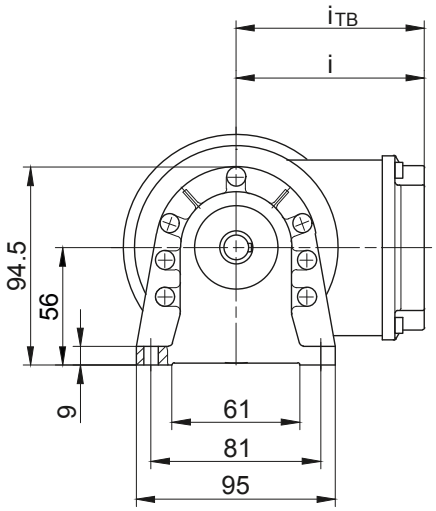

Flange with clearance holes

Code -31/

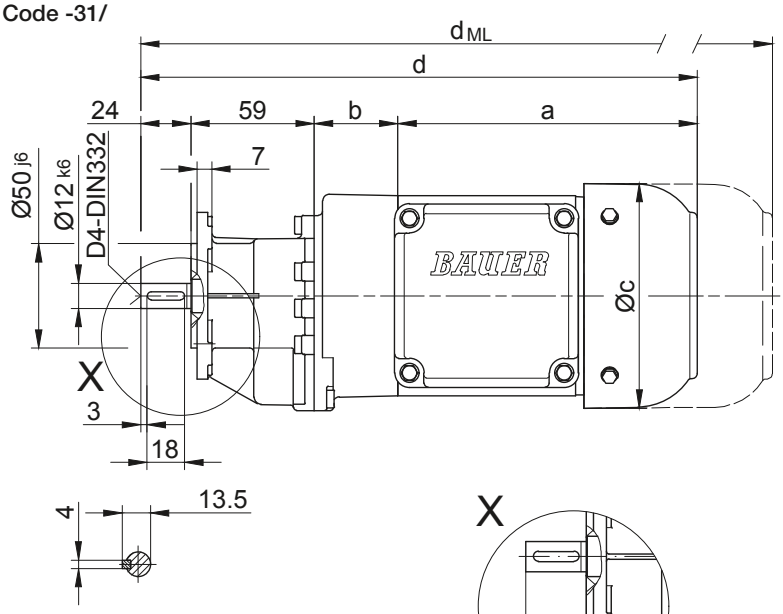

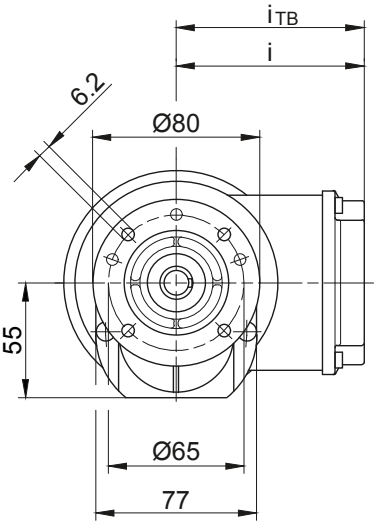

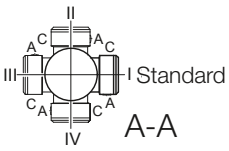

Type	a	b	c	d	i	Design with motor extensions				
						i_{TB}	Brake	Encoder	Brake with Encoder	Back Stop
							d_{ML}	d_{ML}	d_{ML}	d_{ML}
BG04-../D04.A.	142.5	40	110.5	265.5	90	112	309	353	396.5	-

Dimensions in millimetres (mm)

The actual gearbox design can vary from the geometry shown. Generate drive specific 3D and 2D geometries under www.BauerCat.com.

BG-series helical-geared motors

Dimension - Standard

BG05

Foot mounting

Code -11/

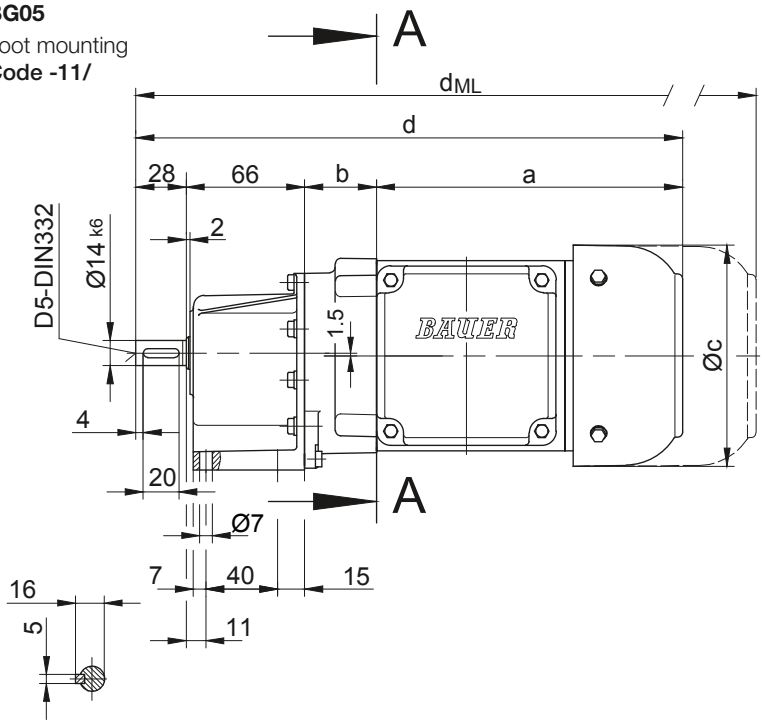

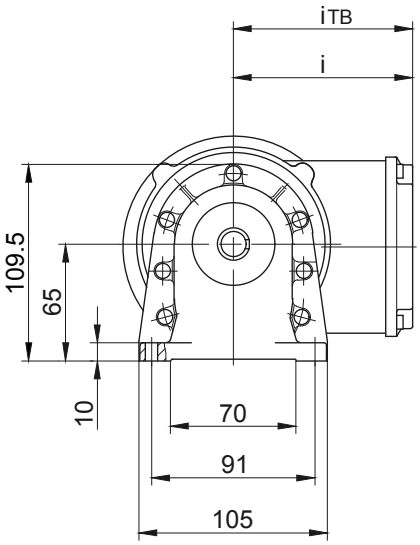

Flange with clearance holes

Code -31/

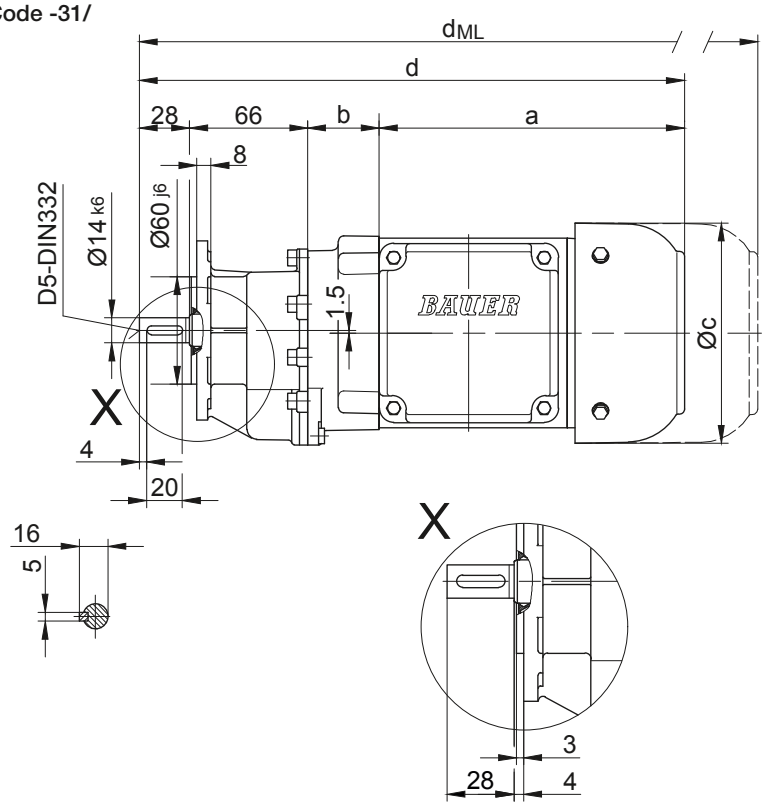

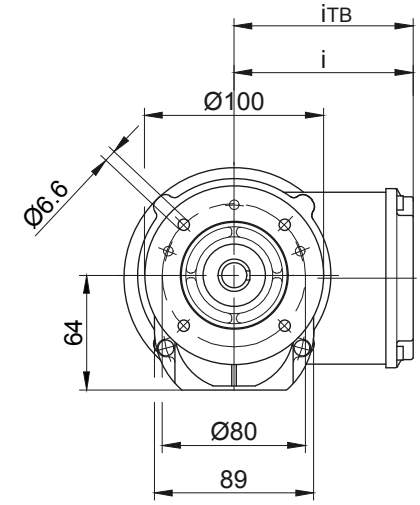

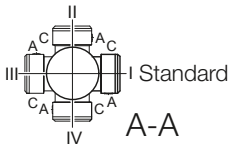

Type	a	b	c	d	i	Design with motor extensions				
						i_{TB}	Brake	Encoder	Brake with Encoder	Back Stop
							d_{ML}	d_{ML}	d_{ML}	d_{ML}
BG05-../D04.A.	142.5	38	110.5	274.5	90	112	318	362	405.5	-
BG05-../D..05.A.	170.5	40	123	304.5	101.5	117	346.5	407	444.5	-
BG05-../D..06.A.	170.5	40	123	304.5	101.5	119	346.5	407	444.5	-
BG05-../D..07.A.	190.5	40	123	324.5	101.5	119	366.5	427	464.5	-

Dimensions in millimetres (mm)

The actual gearbox design can vary from the geometry shown. Generate drive specific 3D and 2D geometries under www.BauerCat.com.

BG06

Foot mounting
Code -11/

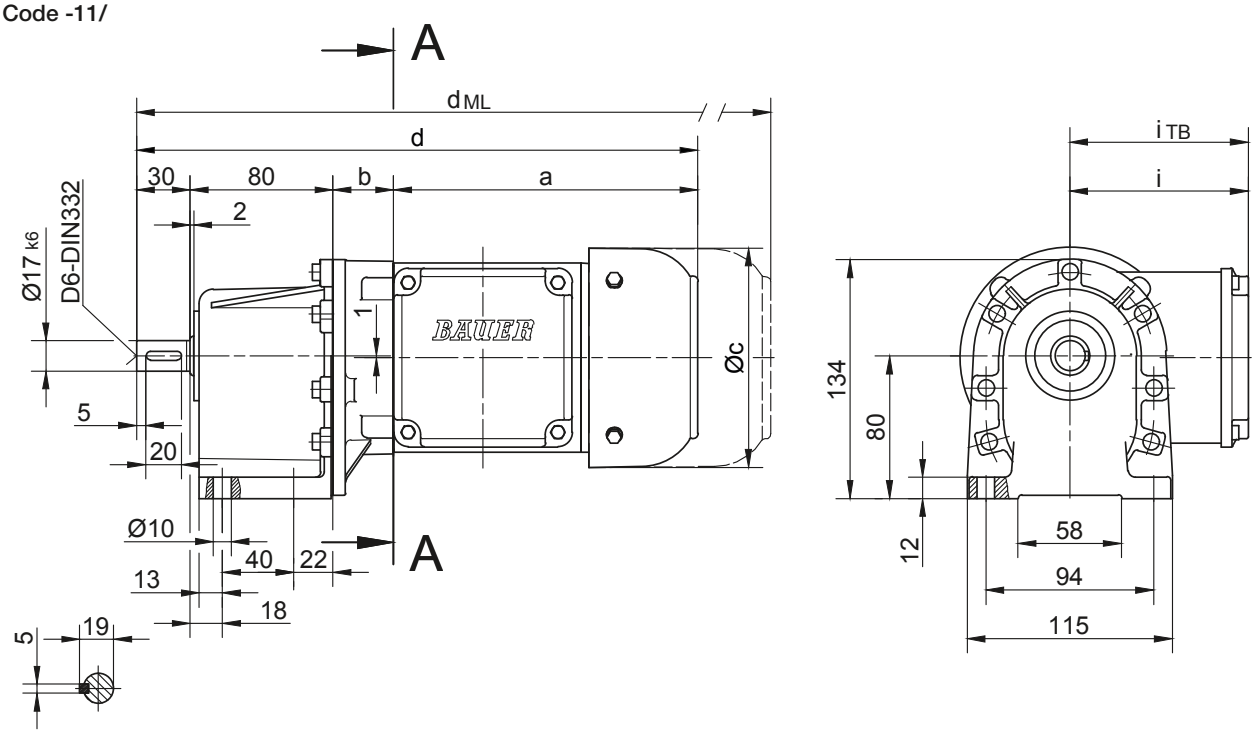

Flange with clearance holes
Code -31/

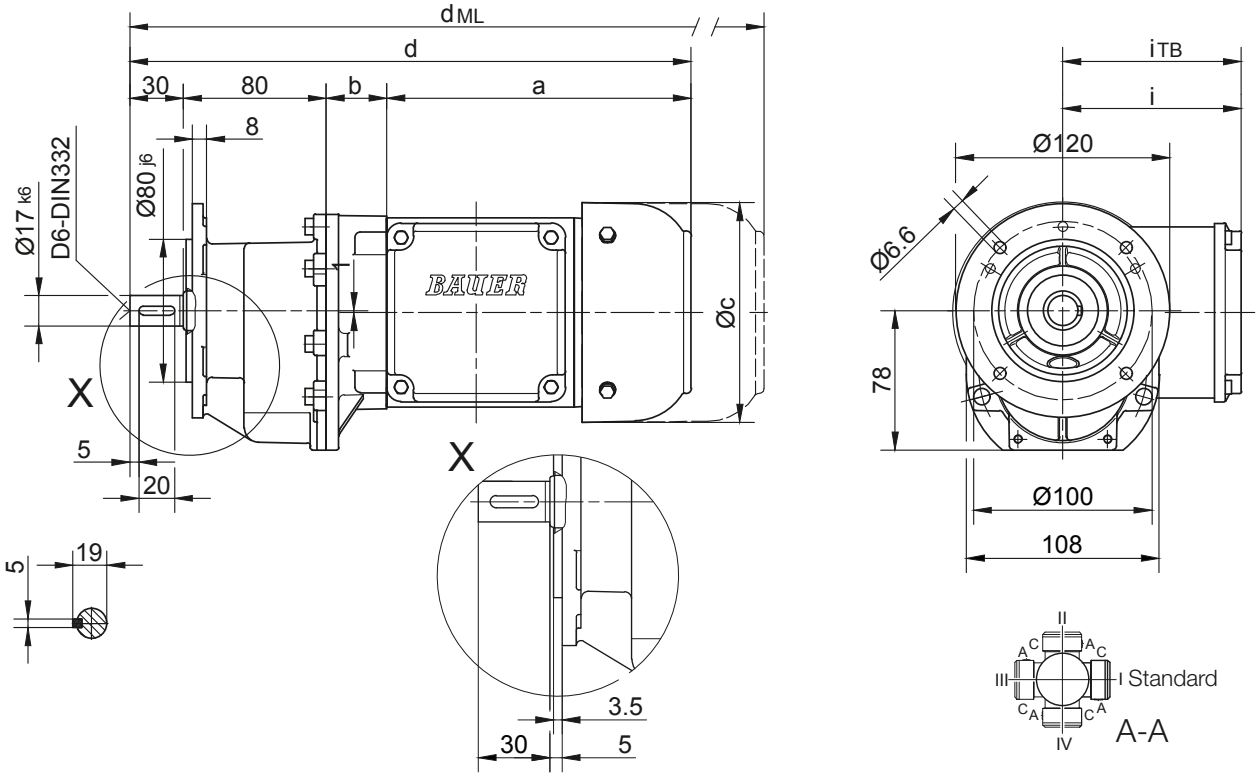

Type	a	b	c	d	i	Design with motor extensions				
						i_{TB}	Brake	Encoder	Brake with Encoder	Back Stop
							d_{ML}	d_{ML}	d_{ML}	d_{ML}
BG06-../D04.A.	142.5	32	110.5	284.5	90	112	328	372	415.5	-
BG06-../D..05.A.	170.5	34	123	314.5	101.5	117	356.5	417	454.5	-
BG06-../D..06.A.	170.5	34	123	314.5	101.5	119	356.5	417	454.5	-
BG06-../D..07.A.	190.5	34	123	334.5	101.5	119	376.5	437	474.5	-
BG06-../D..08.A.	199.5	78	156	387.5	116	136.5	453.5	499.5	561	453.5
BG06-../D..08.B.	229.5	78	156	417.5	116	136.5	483.5	529.5	590.5	483.5

Dimensions in millimetres (mm)

The actual gearbox design can vary from the geometry shown. Generate drive specific 3D and 2D geometries under www.BauerCat.com.

BG-series helical-geared motors

Dimension - Standard

BG10-BG10Z

Foot mounting with clearance holes
Code -11/

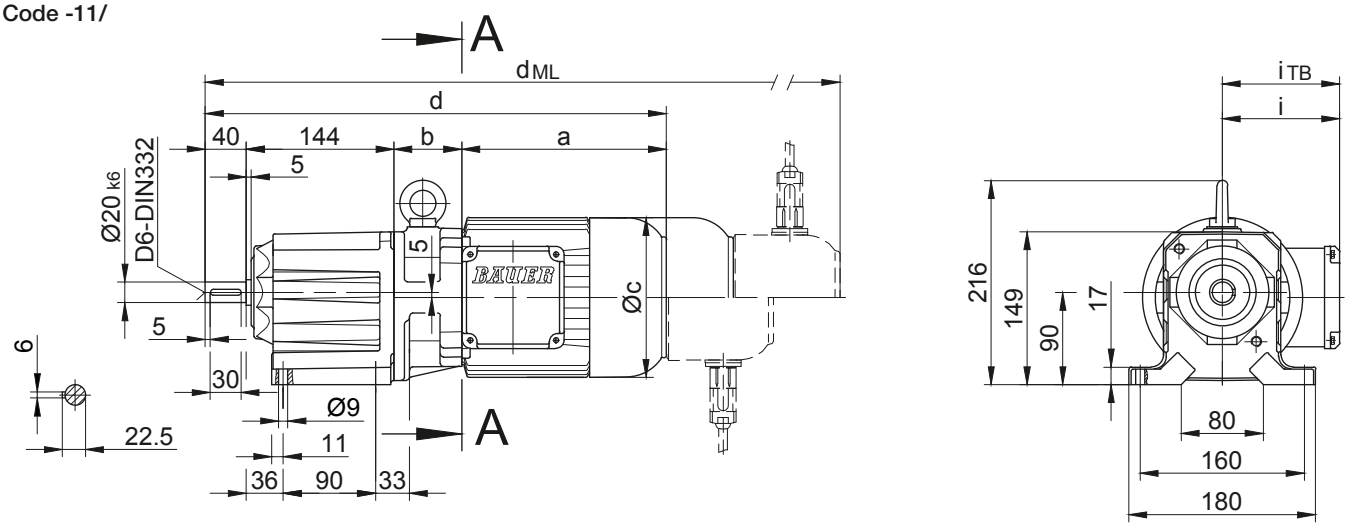

Flange with clearance holes
Code -37/
(Code-27/)

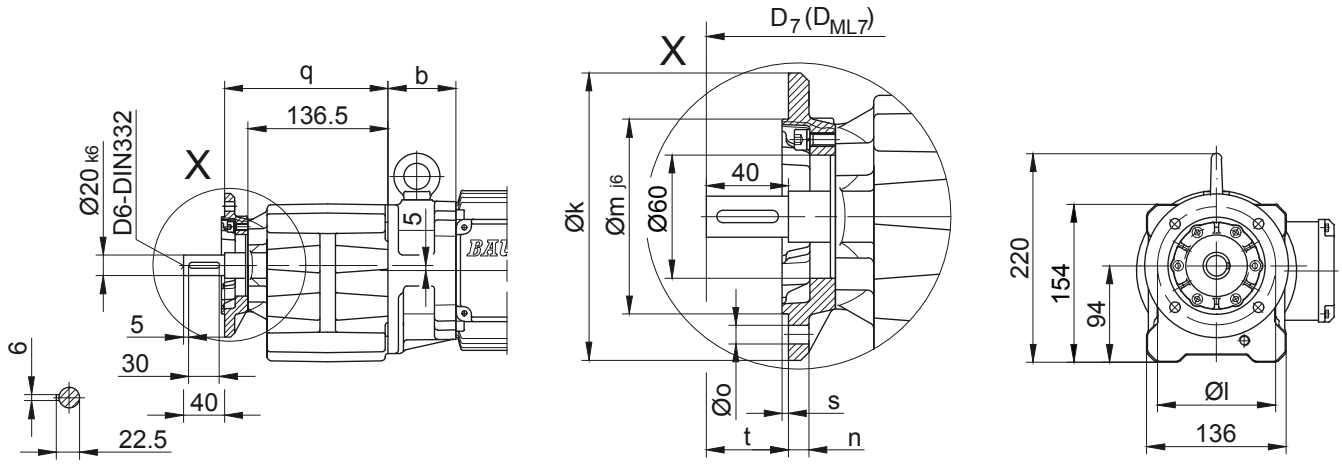

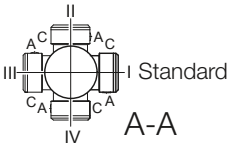

Flange Dimensions											
Type	Design	k	l	m	n	o	q	s	t	D_7	D_{ML7}
BG10..	Code -37V/	140	115	95	10	9	159.5	3	40	d+15.5	d_{ML}+15.5
BG10..	Code -27V/	120	100	80	8	6.6	154.5	3	45	d+15.5	d_{ML}+15.5
Dimensions in millimetres (mm)											

Type	a	b	c	d	i	Design with motor extensions				
						i_{TB}	Brake	Encoder	Brake with Encoder	Back Stop
							d_{ML}	d_{ML}	d_{ML}	d_{ML}
BG10Z-../D04.A.	142.5	86	110.5	412.5	90	112	456	500	543.5	-
BG10-../D..05.A.	170.5	62	123	416.5	101.5	117	458.5	519	556.5	-
BG10Z-../D..05.A.	170.5	88	123	442.5	101.5	117	484.5	545	582.5	-
BG10-../D..06.A.	170.5	62	123	416.5	101.5	119	458.5	519	556.5	-
BG10Z-../D..06.A.	170.5	88	123	442.5	101.5	119	484.5	545	582.5	-
BG10-../D..07.A.	190.5	62	123	436.5	101.5	119	478.5	539	576.5	-
BG10Z-../D..07.A.	190.5	88	123	462.5	101.5	119	504.5	565	602.5	-
BG10-../D..08.A.	199.5	66	156	449.5	116	136.5	515.5	561.5	623	515.5
BG10Z-../D..08.A.	199.5	132	156	515.5	116	136.5	581.5	627.5	689	581.5
BG10-../D..08.B.	229.5	66	156	479.5	116	136.5	545.5	591.5	652.5	545.5
BG10Z-../D..08.B.	229.5	132	156	545.5	116	136.5	611.5	657.5	718.5	611.5
BG10-../D..09.A.	250.5	80.5	176	515	125.5	157	608	622.5	712	608
BG10-../D..09.B.	308.5	80.5	176	573	125.5	157	666	680	770	666
Dimensions in millimetres (mm)										

The actual gearbox design can vary from the geometry shown. Generate drive specific 3D and 2D geometries under www.BauerCat.com.

BG10-BG10Z

Flange with clearance holes
Code -71/

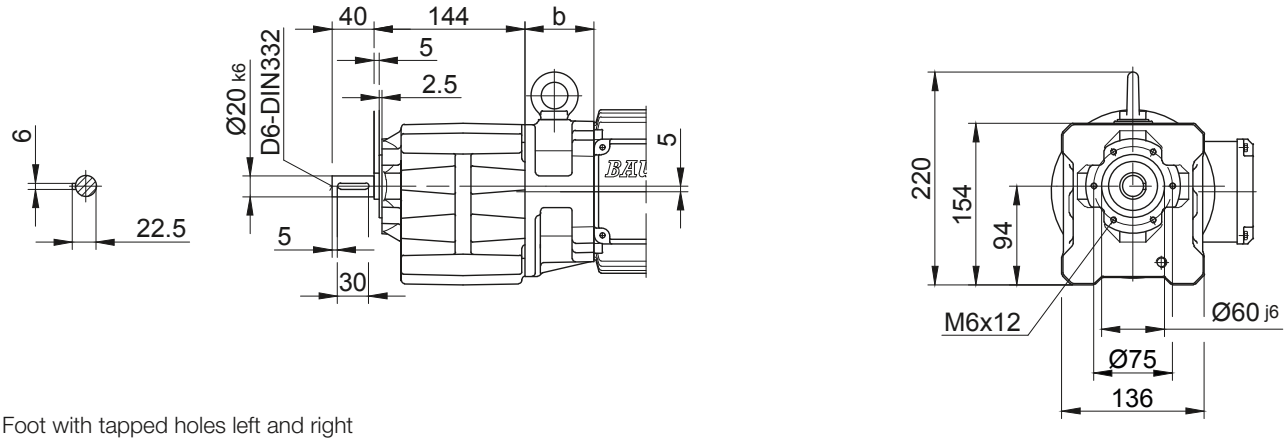

Foot with tapped holes left and right
Code -61LR/

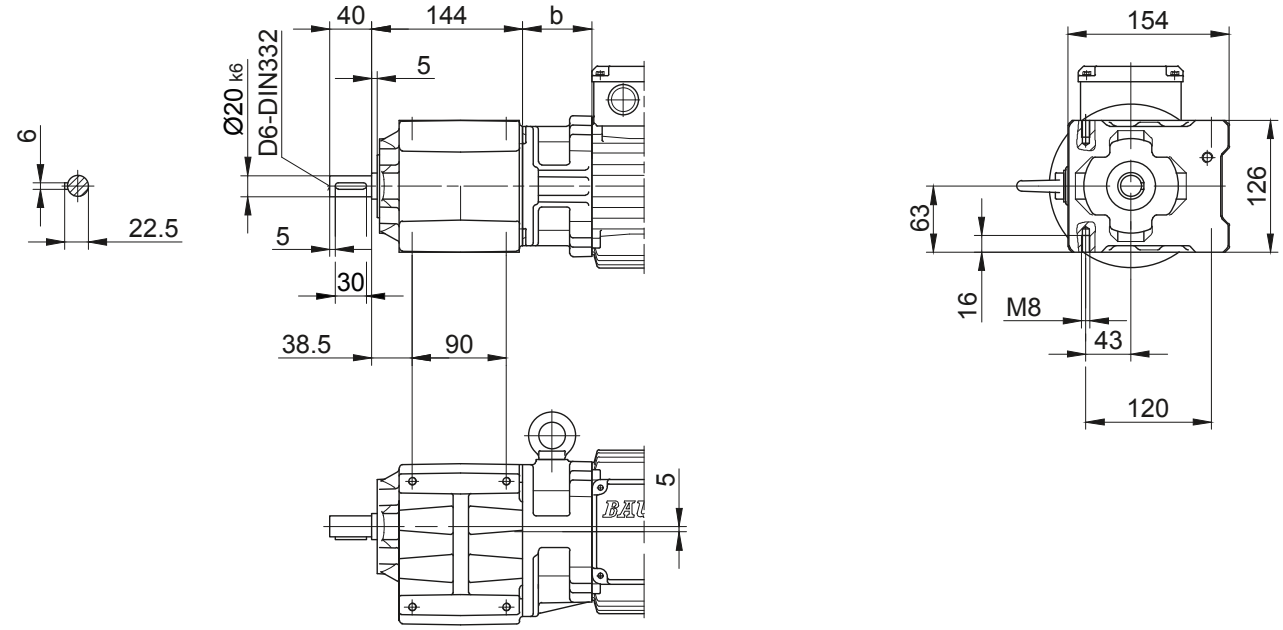

Foot plate left
Code -91L/

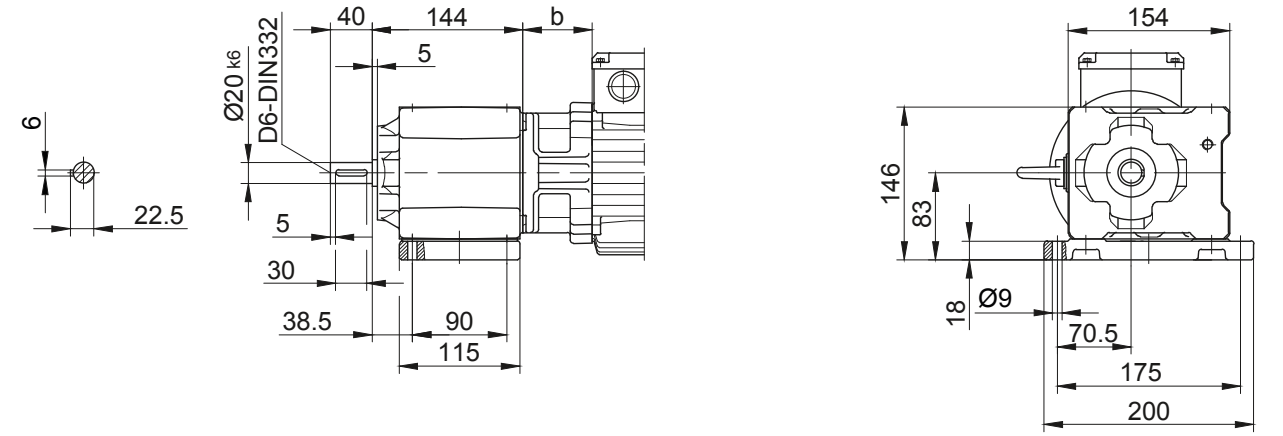

The actual gearbox design can vary from the geometry shown. Generate drive specific 3D and 2D geometries under www.BauerCat.com.

BG-series helical-geared motors

Dimension - Standard

BG10X-BG10XZ

Foot mounting with clearance holes
Code -11/

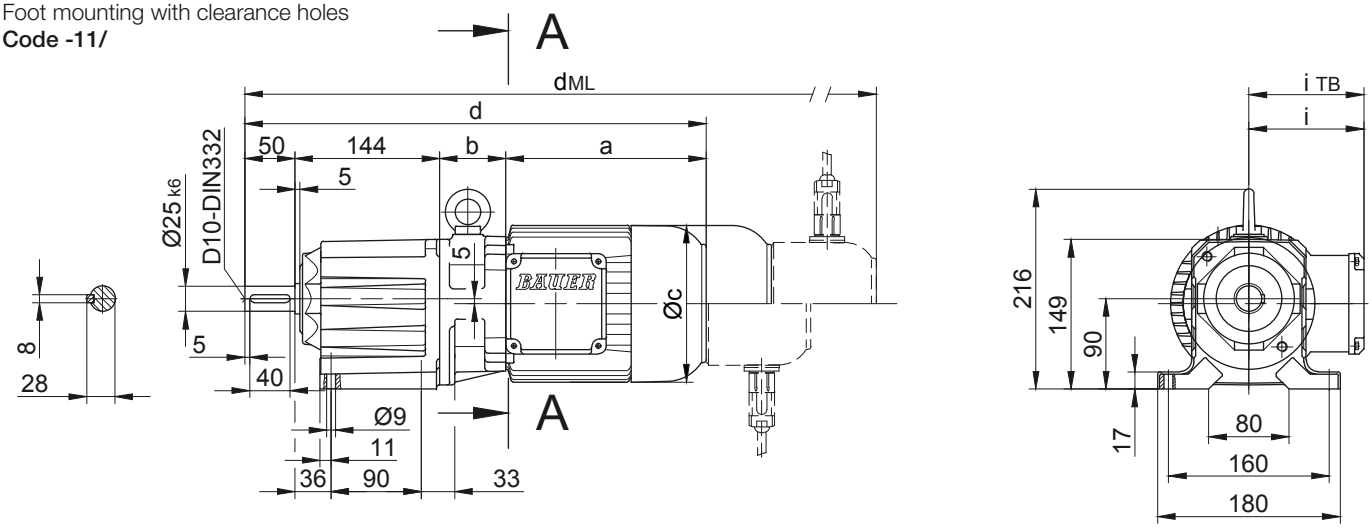

Flange with clearance holes
Code -37/
(Code-27/)

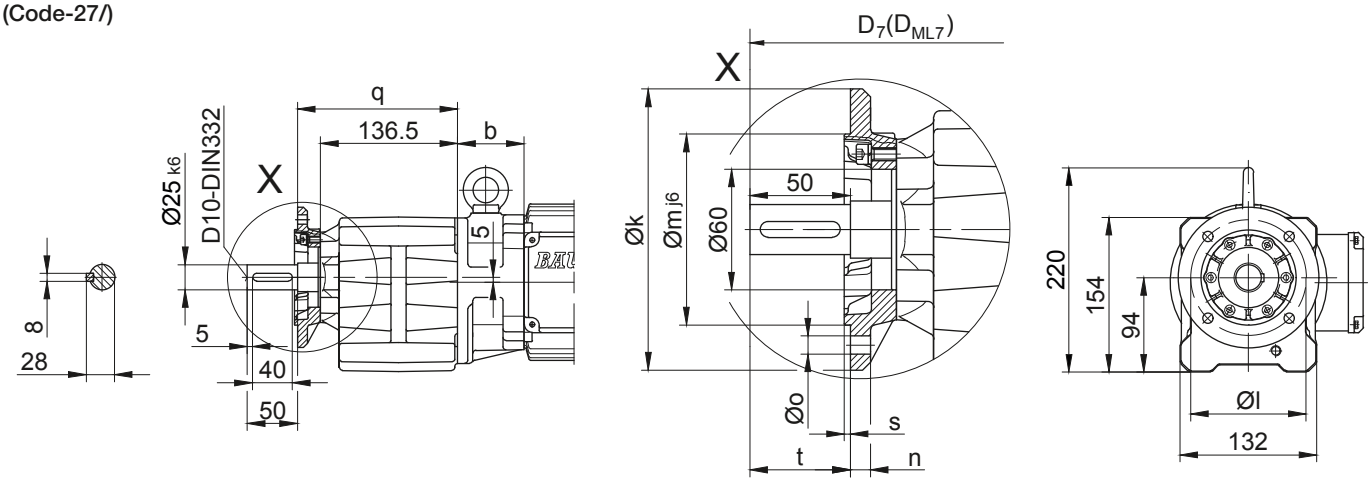

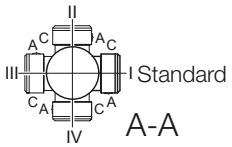

Flange Dimensions											
Type	Design	k	l	m	n	o	q	s	t	D_7	D_{ML7}
BG10X..	Code -37V/	140	115	95	10	9	159.5	3	50	d+15.5	d_{ML}+15.5
BG10X..	Code -27V/	120	100	80	8	6.6	154.5	3	55	d+15.5	d_{ML}+15.5
Dimensions in millimetres (mm)											

Type	a	b	c	d	i	Design with motor extensions				
						i_{TB}	Brake	Encoder	Brake with Encoder	Back Stop
							d_{ML}	d_{ML}	d_{ML}	d_{ML}
BG10XZ-../D04.A.	142.5	86	110.5	422.5	90	112	466	510	553.5	-
BG10X-../D..05.A.	170.5	62	123	426.5	101.5	117	468.5	529	566.5	-
BG10XZ-../D..05.A.	170.5	88	123	452.5	101.5	117	494.5	555	592.5	-
BG10X-../D..06.A.	170.5	62	123	426.5	101.5	119	468.5	529	566.5	-
BG10XZ-../D..06.A.	170.5	88	123	452.5	101.5	119	494.5	555	592.5	-
BG10X-../D..07.A.	190.5	62	123	446.5	101.5	119	488.5	549	586.5	-
BG10XZ-../D..07.A.	190.5	88	123	472.5	101.5	119	514.5	575	612.5	-
BG10X-../D..08.A.	199.5	66	156	459.5	116	136.5	525.5	571.5	633	525.5
BG10XZ-../D..08.A.	199.5	132	156	525.5	116	136.5	591.5	637.5	699	591.5
BG10X-../D..08.B.	229.5	66	156	489.5	116	136.5	555.5	601.5	662.5	555.5
BG10XZ-../D..08.B.	229.5	132	156	555.5	116	136.5	621.5	667.5	728.5	621.5
BG10X-../D..09.A.	250.5	80.5	176	525	125.5	157	618	632.5	722	618
BG10X-../D..09.B.	308.5	80.5	176	583	125.5	157	676	690	780	676
Dimensions in millimetres (mm)										

The actual gearbox design can vary from the geometry shown. Generate drive specific 3D and 2D geometries under www.BauerCat.com.

BG10X-BG10XZ

Flange with clearance holes
Code -71/

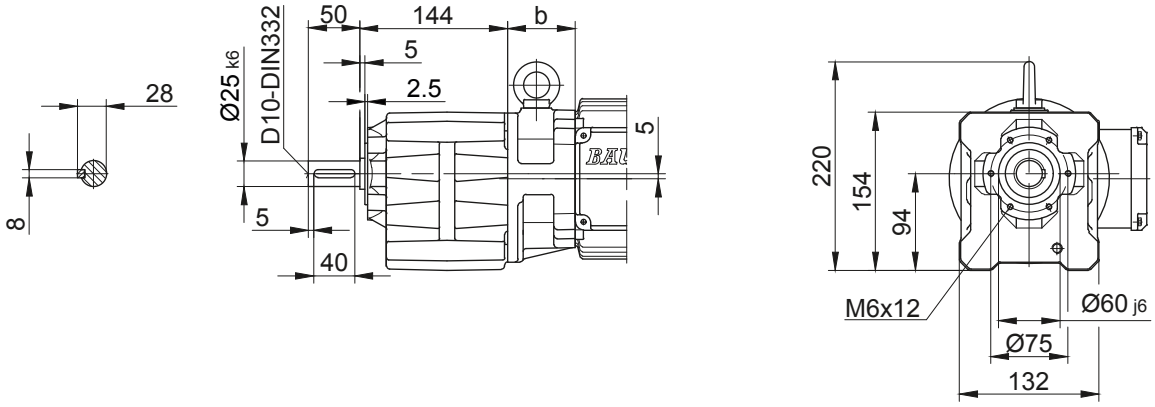

Foot with tapped holes left and right
Code -61LR/

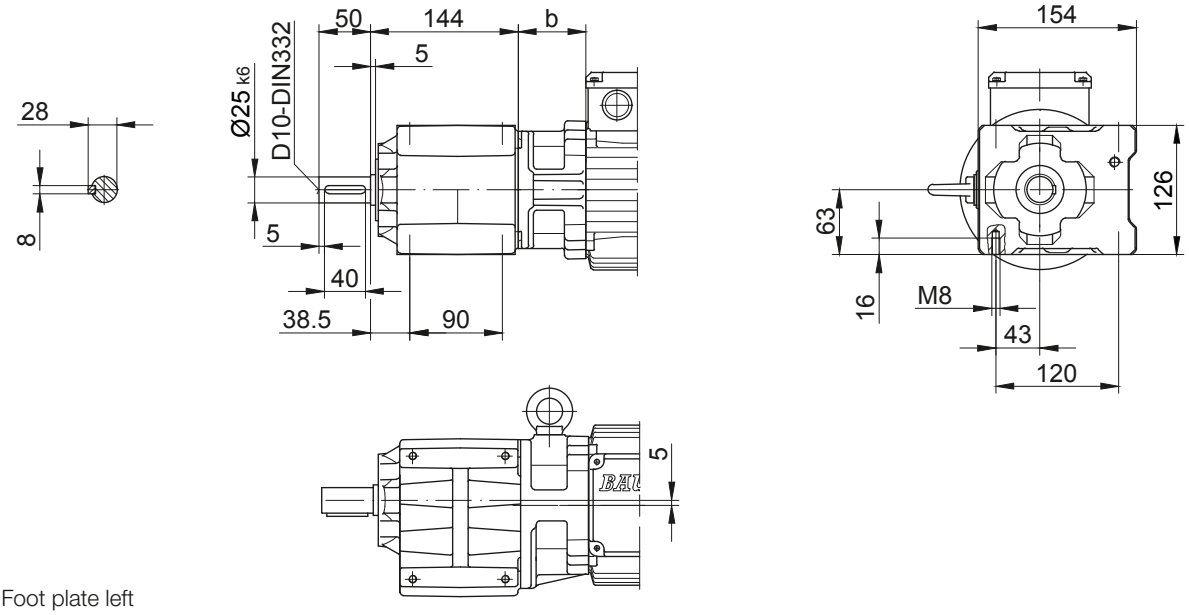

Foot plate left
Code -91L/

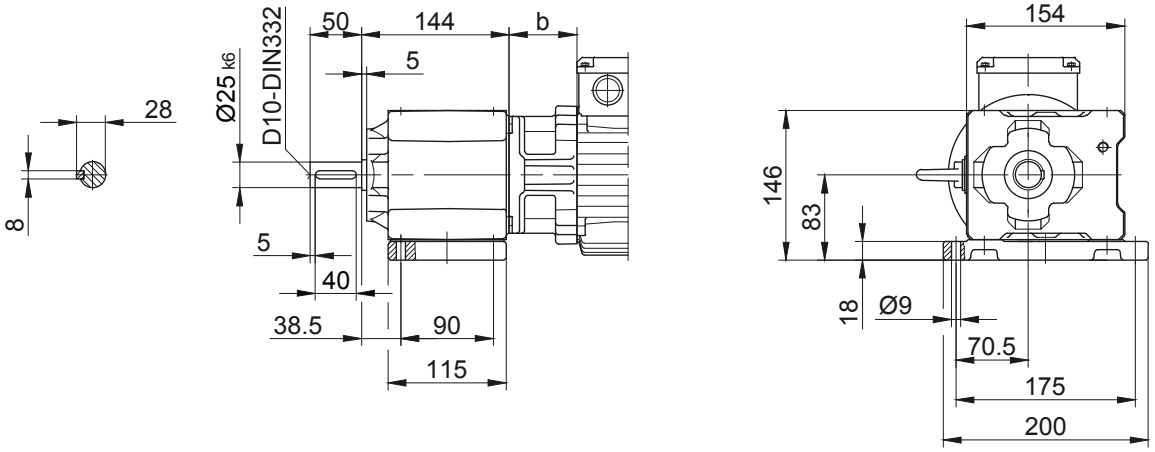

BG15

Foot mounting with clearance holes

Code -11/

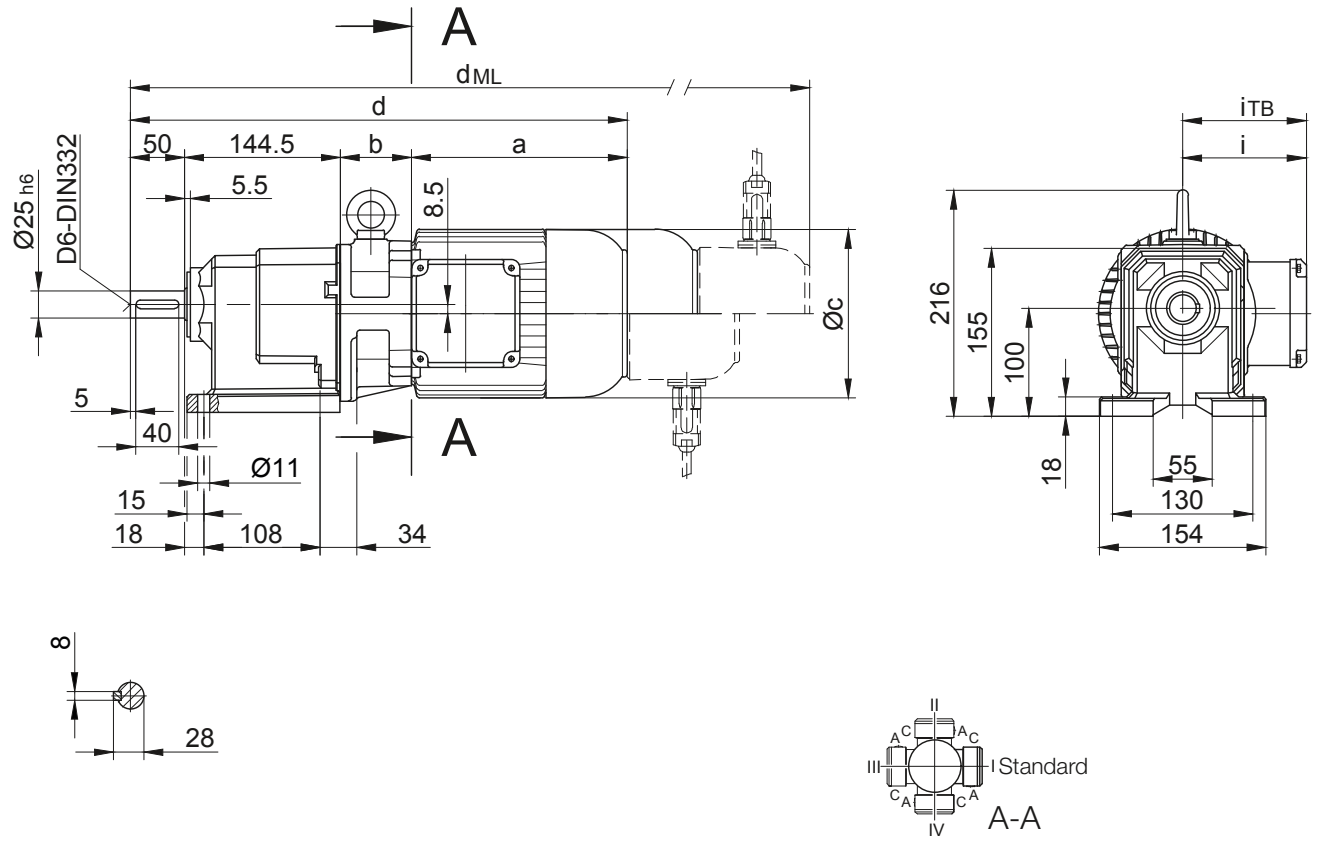

Type	a	b	c	d	i	Design with motor extensions				
						i_{TB}	Brake	Encoder	Brake with Encoder	Back Stop
							d_{ML}	d_{ML}	d_{ML}	d_{ML}
BG15-../D..05.A.	170.5	62	123	427	101.5	117	442.5	486.5	530	-
BG15-../D..06.A.	170.5	62	123	427	101.5	119	469	529.5	567	-
BG15-../D..07.A.	190.5	62	123	447	101.5	119	489	549.5	587	-
BG15-../D..08.A.	199.5	66	156	460	116	136.5	526	572	633.5	331.5
BG15-../D..08.B.	229.5	66	156	490	116	136.5	556	602	663	556
BG15-../D..09.A.	250.5	80.5	176	525.5	125.5	157	618.5	633	722.5	618.5
BG15-../D..09.B.	308.5	80.5	176	583.5	125.5	157	676.5	690.5	780.5	676.5

Dimensions in millimetres (mm)

The actual gearbox design can vary from the geometry shown. Generate drive specific 3D and 2D geometries under www.BauerCat.com.

BG-series helical-geared motors

Dimension - Standard

BG20-BG20Z

Foot mounting with clearance holes
Code -11/

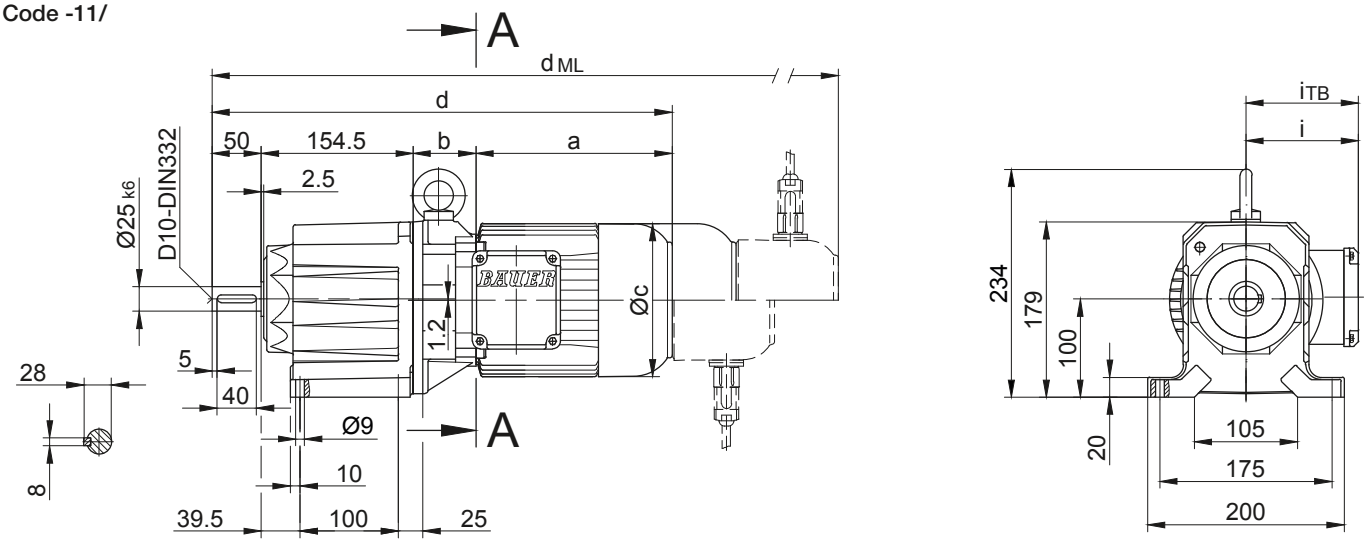

Flange with clearance holes
Code -37/
(Code-47/)

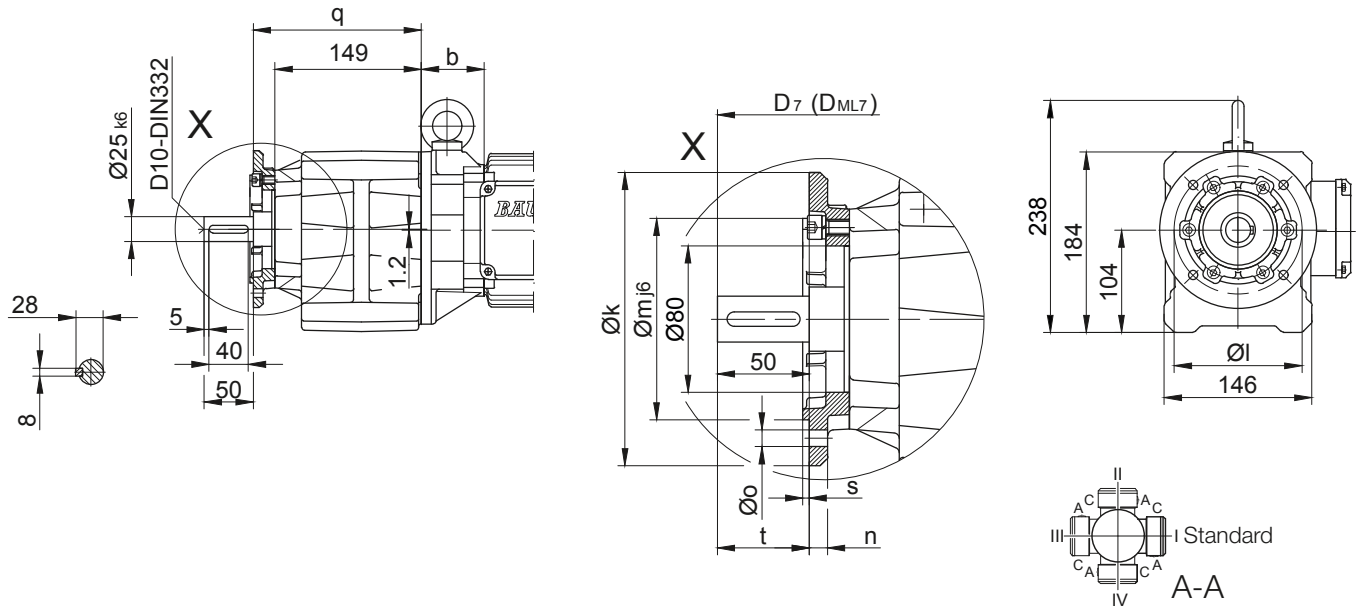

Flange Dimensions											
Type	Design	k	l	m	n	o	q	s	t	D_7	D_{ML7}
BG20..	Code -37V/	160	130	110	10	9	171	3.5	50	d+16.5	d_{ML}+16.5
BG20..	Code -47V/	200	165	130	12	11	178	3.5	43	d+16.5	d_{ML}+16.5
Dimensions in millimetres (mm)											

Type	a	b	c	d	i	Design with motor extensions				
						i_{TB}	Brake	Encoder	Brake with Encoder	Back Stop
							d_{ML}	d_{ML}	d_{ML}	d_{ML}
BG20Z-../D04.A.	142.5	100	110.5	447	90	112	490.5	534.5	578	-
BG20-../D..05.A.	170.5	60	123	435	101.5	117	477	537.5	575	-
BG20Z-../D..05.A.	170.5	102	123	477	101.5	117	519	579.5	617	-
BG20-../D..06.A.	170.5	60	123	435	101.5	119	477	537.5	575	-
BG20Z-../D..06.A.	170.5	102	123	477	101.5	119	519	579.5	617	-
BG20-../D..07.A.	190.5	60	123	455	101.5	119	497	557.5	595	-
BG20Z-../D..07.A.	190.5	102	123	497	101.5	119	539	599.5	637	-
BG20-../D..08.A.	199.5	64	156	468	116	136.5	534	580	641.5	534
BG20Z-../D..08.A.	199.5	146	156	550	116	136.5	616	662	723.5	616
BG20-../D..08.B.	229.5	64	156	498	116	136.5	564	610	671	564
BG20Z-../D..08.B.	229.5	146	156	580	116	136.5	646	692	753	646
BG20-../D..09.A.	250.5	78.5	176	533.5	125.5	157	626.5	641	730.5	626.5
BG20-../D..09.B.	308.5	78.5	176	591.5	125.5	157	684.5	698.5	788.5	684.5
Dimensions in millimetres (mm)										

The actual gearbox design can vary from the geometry shown. Generate drive specific 3D and 2D geometries under www.BauerCat.com.

BG20-BG20Z

Flange with clearance holes
Code -71/

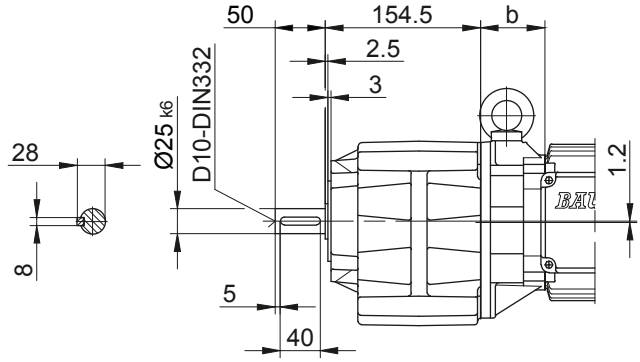

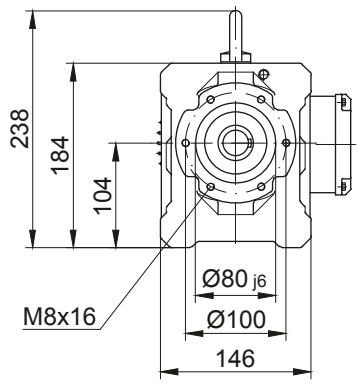

Foot with tapped holes left and right
Code -61LR/

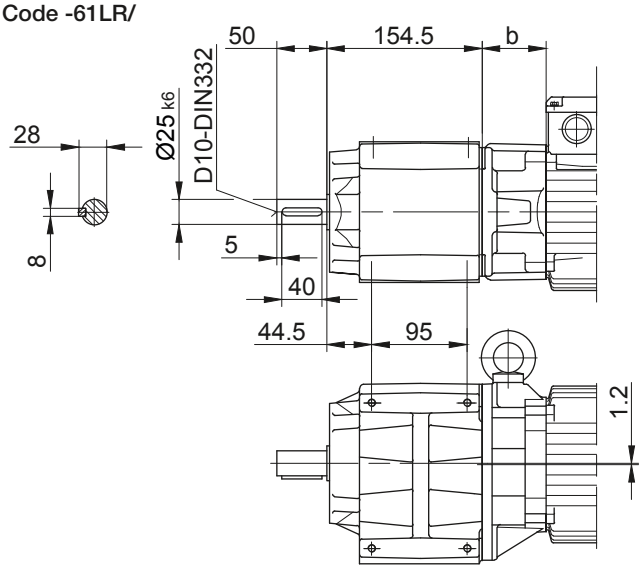

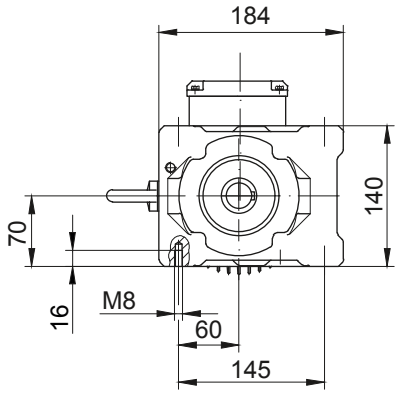

Foot mounting right with clearance holes
Code -01R/

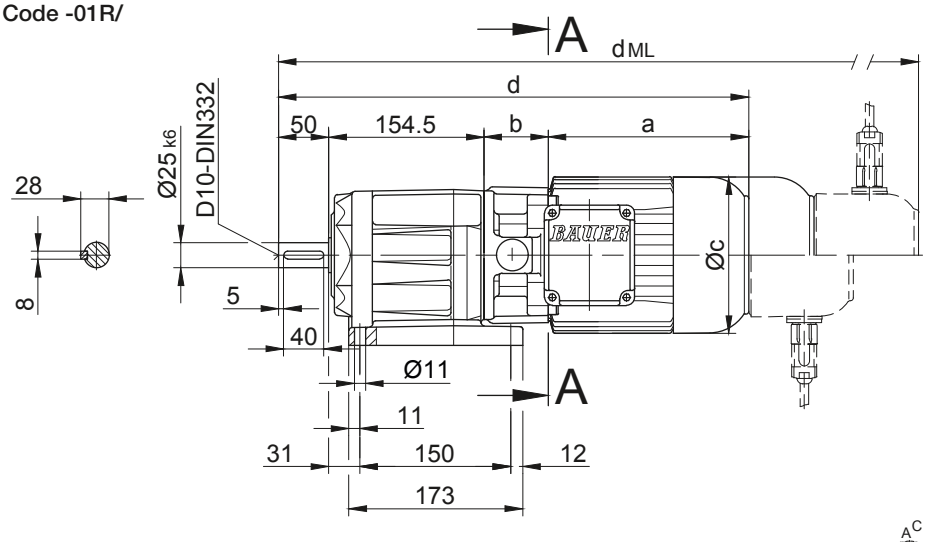

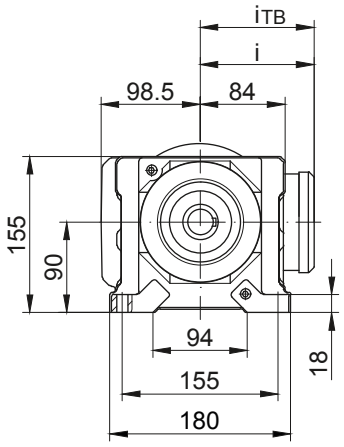

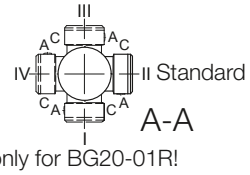

only for BG20-01R!

BG-series helical-geared motors

Dimension - Standard

BG30-BG30Z

Foot mounting with clearance holes
Code -11/

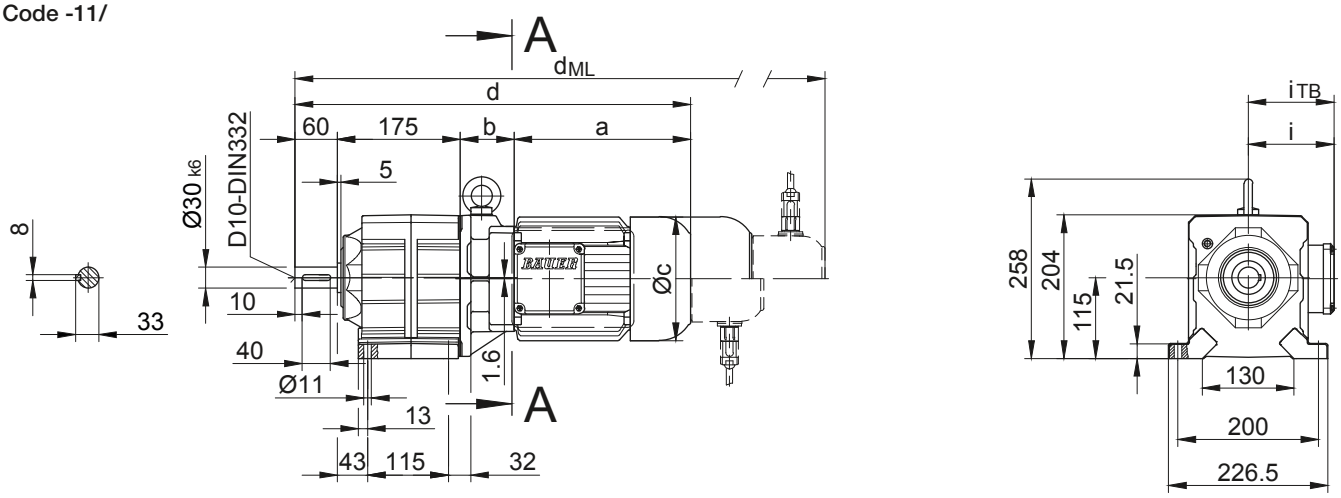

Flange with clearance holes
Code -37/
(Code-27/)

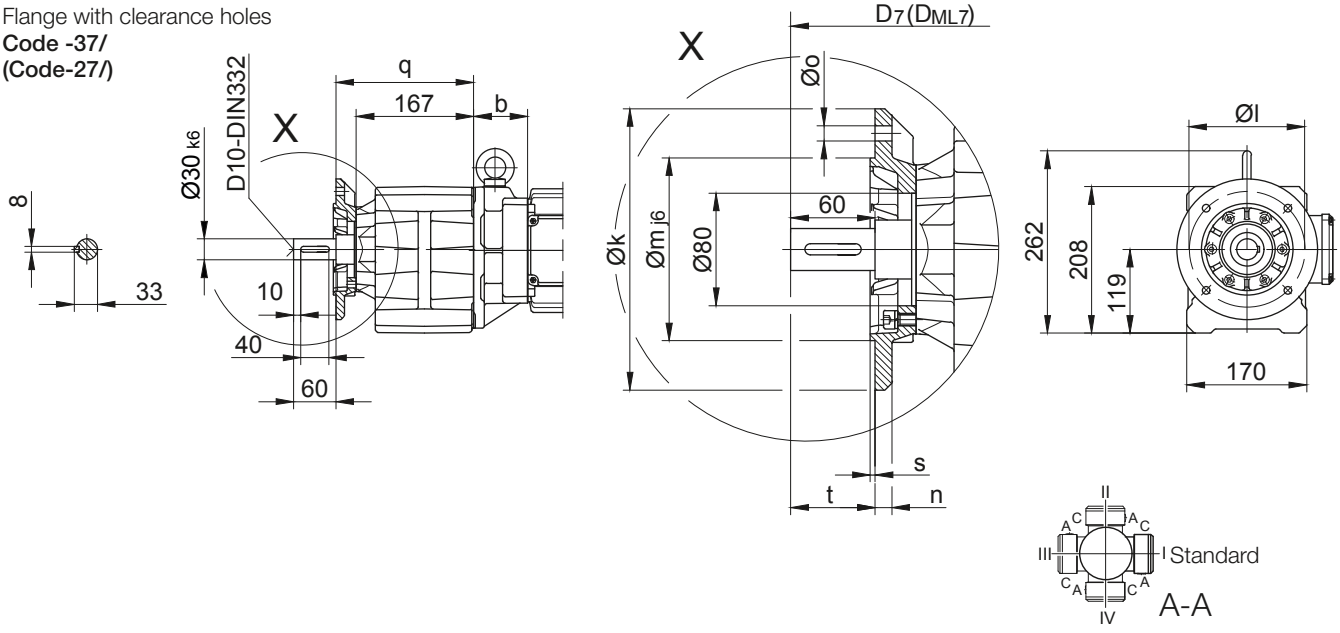

Flange Dimensions											
Type	Design	k	l	m	n	o	q	s	t	D_7	D_{ML7}
BG30..	Code -37/	200	165	130	12	11	196	3.5	60	d+21	d_{ML}+21
BG30..	Code -27/	160	130	110	10	9	189	3.5	67	d+21	d_{ML}+21
Dimensions in millimetres (mm)											

Type	a	b	c	d	i	Design with motor extensions				
						i_{TB}	Brake	Encoder	Brake with Encoder	Back Stop
							d_{ML}	d_{ML}	d_{ML}	d_{ML}
BG30-../D..05.A.	170.5	58	123	463.5	101.5	117	505.5	566	603.5	-
BG30Z-../D..05.A.	170.5	133.5	123	539	101.5	117	581	641.5	679	-
BG30-../D..06.A.	170.5	58	123	463.5	101.5	119	505.5	566	603.5	-
BG30Z-../D..06.A.	170.5	133.5	123	539	101.5	119	581	641.5	679	-
BG30-../D..07.A.	190.5	58	123	483.5	101.5	119	525.5	586	623.5	-
BG30Z-../D..07.A.	190.5	133.5	123	559	101.5	119	601	661.5	699	-
BG30-../D..08.A.	199.5	62	156	496.5	116	136.5	562.5	608.5	670	562.5
BG30Z-../D..08.A.	199.5	137.5	156	572	116	136.5	638	684	745.5	638
BG30-../D..08.B.	229.5	62	156	526.5	116	136.5	592.5	638.5	699.5	592.5
BG30Z-../D..08.B.	229.5	137.5	156	602	116	136.5	668	714	775	668
BG30-../D..09.A.	250.5	76.5	176	562	125.5	157	655	727	759	655
BG30Z-../D..09.A.	250.5	152	176	637.5	125.5	157	730.5	802.5	834.5	730.5
BG30-../D..09.B.	308.5	76.5	176	620	125.5	157	713	727	817	713
BG30Z-../D..09.B.	308.5	152	176	695.5	125.5	157	788.5	802.5	892.5	788.5
BG30-../D..11.A.	319	83	218	637	165	176	735	744.5	837	735
BG30-../D..11.B.	387	83	218	705	165	176	801	812.5	905	801
Dimensions in millimetres (mm)										

The actual gearbox design can vary from the geometry shown. Generate drive specific 3D and 2D geometries under www.BauerCat.com.

BG30-BG30Z

Flange with clearance holes
Code -71/

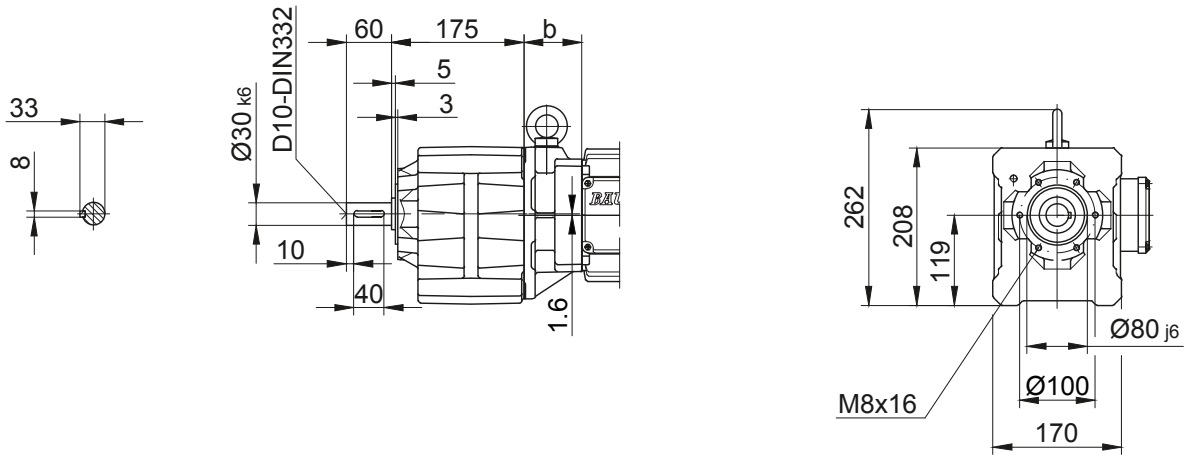

Foot with tapped holes left and right
Code -61LR/

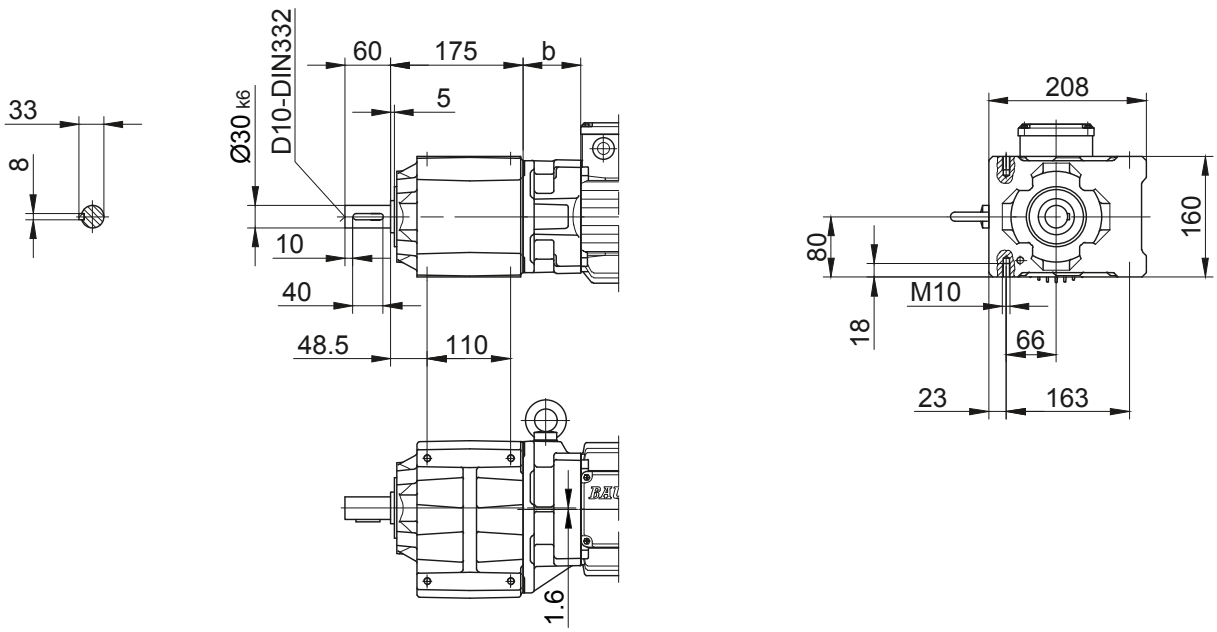

Foot plate left
Code -91L/

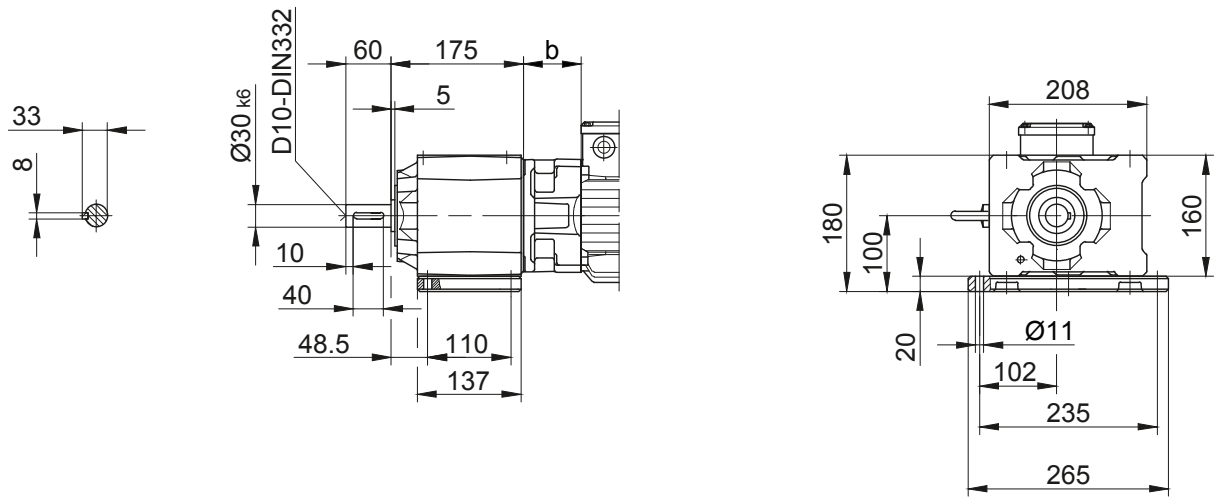

The actual gearbox design can vary from the geometry shown. Generate drive specific 3D and 2D geometries under www.BauerCat.com.

BG-series helical-geared motors

Dimension - Standard

BG40-BG40Z

Foot mounting with clearance holes
Code -11/

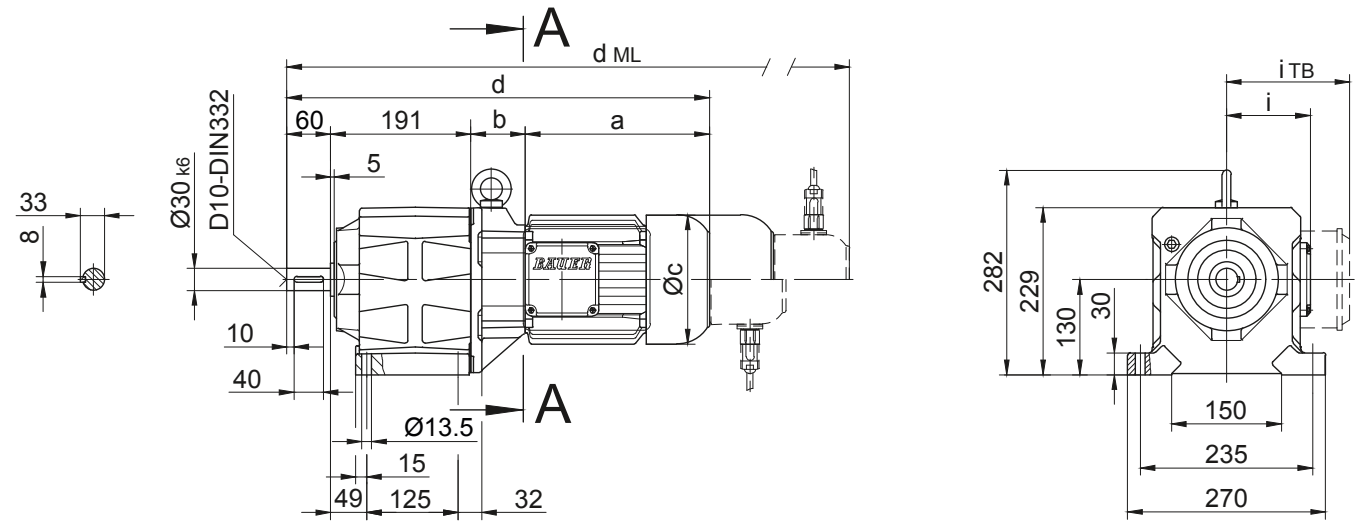

Flange with clearance holes
Code -37/
(Code-47/)

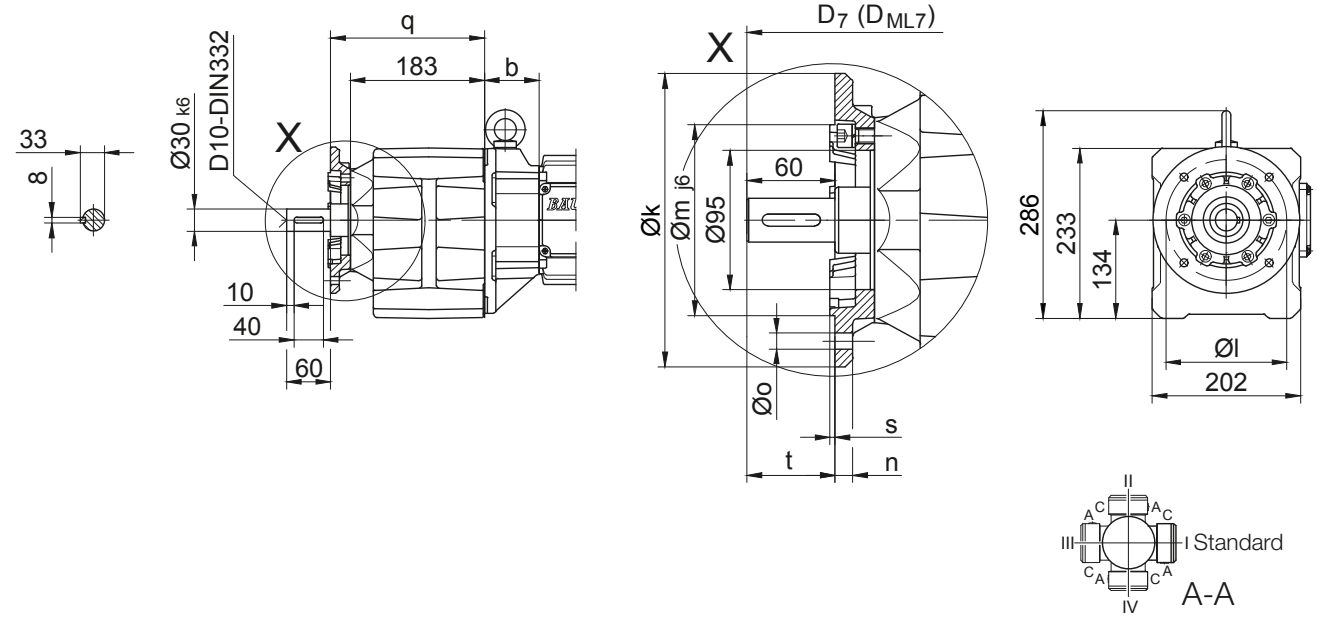

Flange Dimensions											
Type	Design	k	l	m	n	o	q	s	t	D_7	D_{ML7}
BG40..	Code -37/	200	165	130	12	11	210	3.5	60	d+19	d_{ML}+19
BG40..	Code -47/	250	215	180	16	13.5	219	4	51	d+19	d_{ML}+19
Dimensions in millimetres (mm)											

Type	a	b	c	d	i	Design with motor extensions				
						i_{TB}	Brake	Encoder	Brake with Encoder	Back Stop
							d_{ML}	d_{ML}	d_{ML}	d_{ML}
BG40Z-../D..05.A.	170.5	138.5	123	560	101.5	117	602	662.5	700	-
BG40Z-../D..06.A.	170.5	138.5	123	560	101.5	119	602	662.5	700	-
BG40Z-../D..07.A.	190.5	138.5	123	580	101.5	119	622	682.5	720	-
BG40-../D..08.A.	199.5	60	156	510.5	116	136.5	576.5	622.5	684	576.5
BG40Z-../D..08.A.	199.5	142.5	156	593	116	136.5	659	705	766.5	659
BG40-../D..08.B.	229.5	60	156	540.5	116	136.5	606.5	652.5	713.5	606.5
BG40Z-../D..08.B.	229.5	142.5	156	623	116	136.5	689	735	796	689
BG40-../D..09.A.	250.5	74.5	176	576	125.5	157	669	683.5	773	669
BG40Z-../D..09.A.	250.5	157	176	658.5	125.5	157	751.5	766	855.5	751.5
BG40-../D..09.B.	308.5	74.5	176	634	125.5	157	727	741	831	727
BG40Z-../D..09.B.	308.5	157	176	716.5	125.5	157	809.5	823.5	913.5	809.5
BG40-../D..11.A.	319	81	218	651	165	176	749	758.5	851	749
BG40-../D..11.B.	387	81	218	719	165	176	815	826.5	919	815
Dimensions in millimetres (mm)										

The actual gearbox design can vary from the geometry shown. Generate drive specific 3D and 2D geometries under www.BauerCat.com.

BG40-BG40Z

Flange with clearance holes
Code -71/

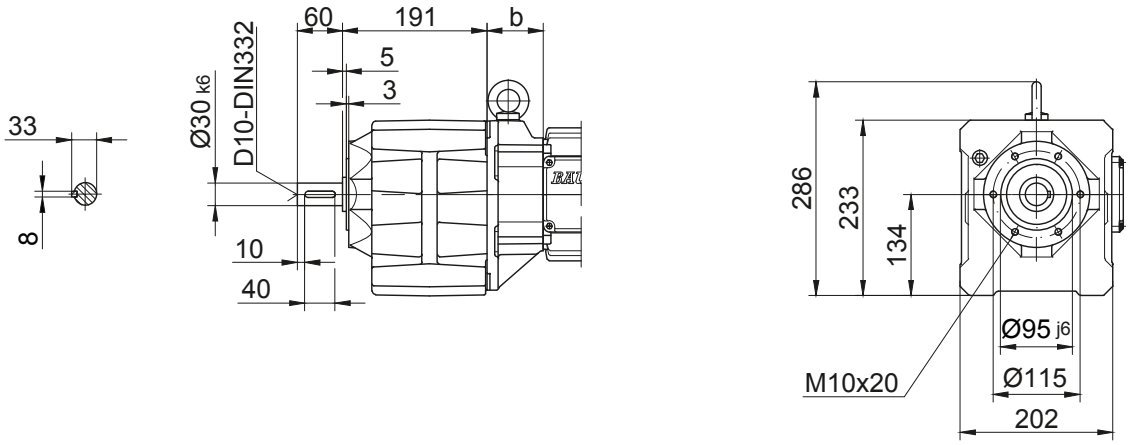

Foot with tapped holes left and right
Code -61LR/

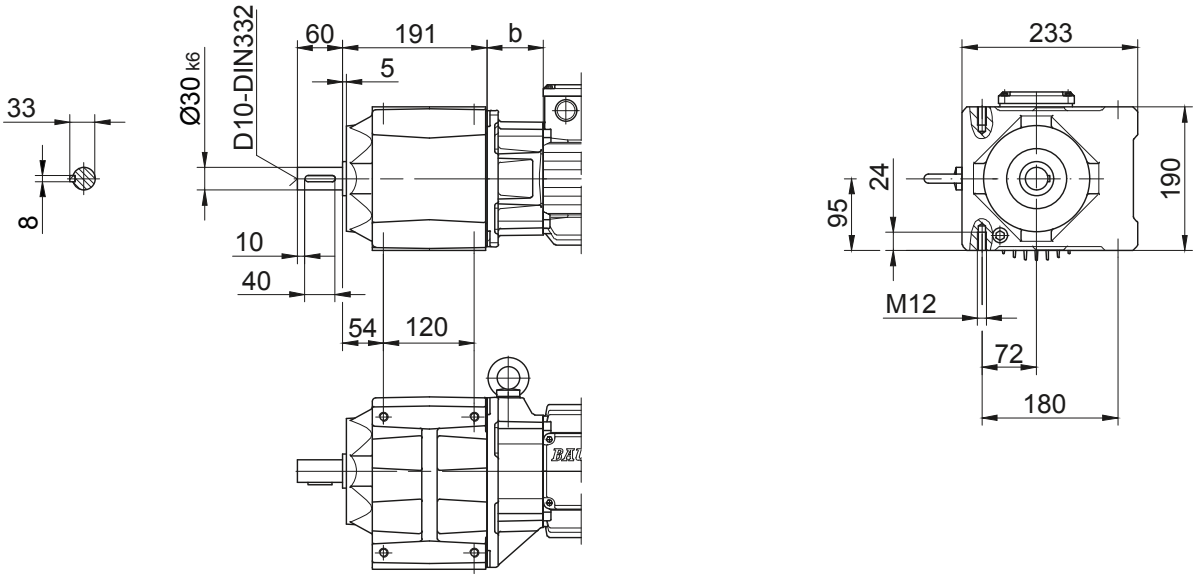

Foot plate left
Code -91L/

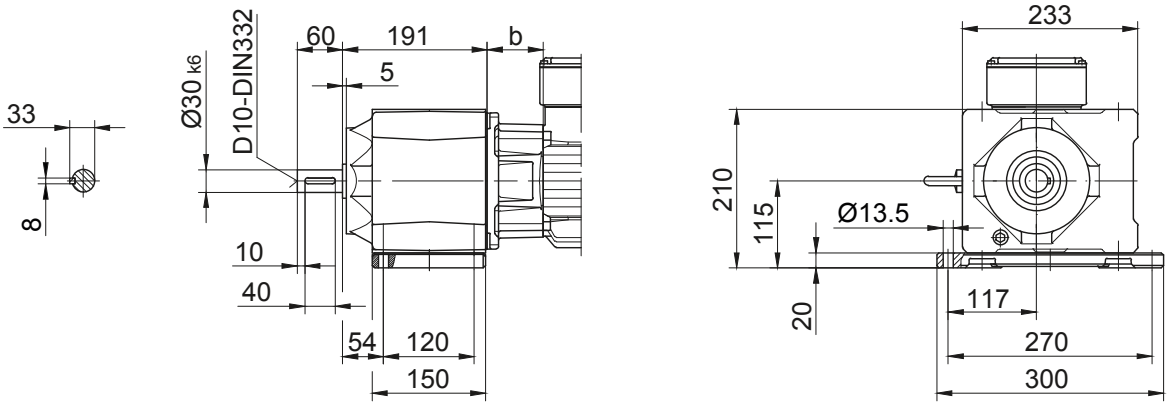

The actual gearbox design can vary from the geometry shown. Generate drive specific 3D and 2D geometries under www.BauerCat.com.

BG-series helical-geared motors

Dimension - Standard

BG50-BG50Z

Foot mounting with clearance holes
Code -11/

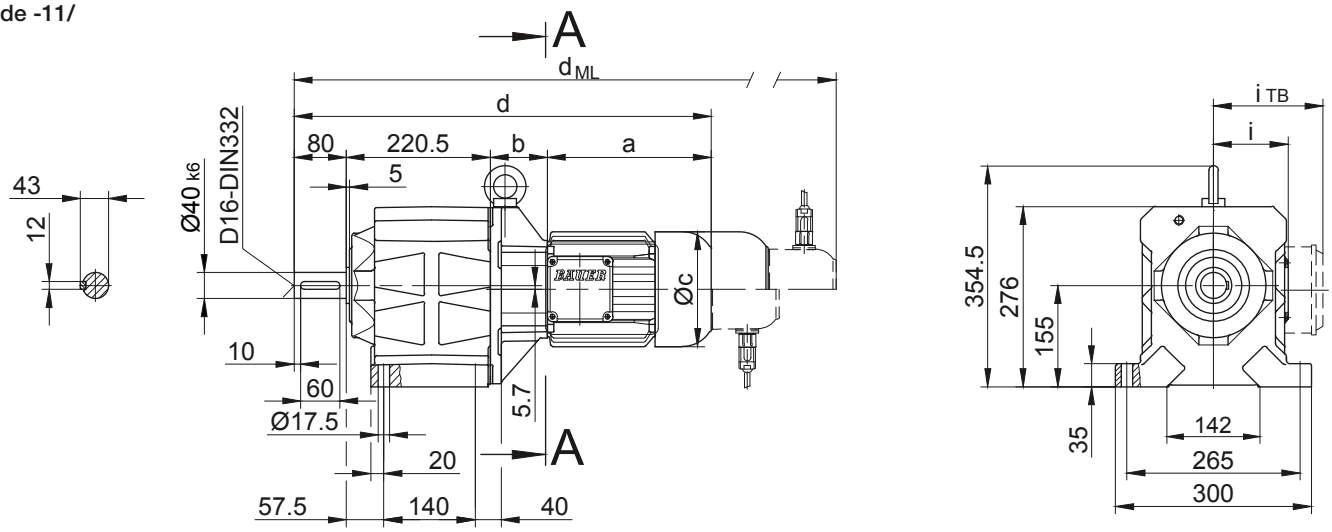

Flange with clearance holes
Code -37/
(Code-27/)

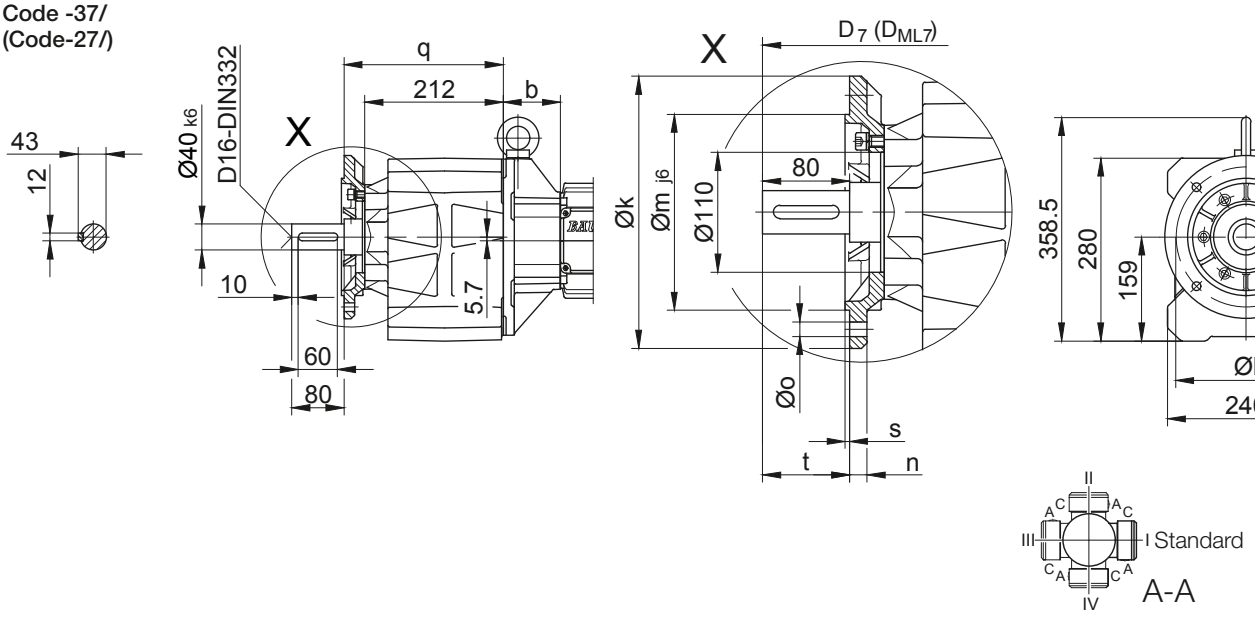

Flange Dimensions											
Type	Design	k	l	m	n	o	q	s	t	D_7	D_{ML7}
BG50..	Code -37/	250	215	180	16	13.5	244	4	80	d+23.5	d_{ML}+23.5
BG50..	Code -27/	200	165	130	12	11	241	3.5	83	d+23.5	d_{ML}+23.5
Dimensions in millimetres (mm)											

Type	a	b	c	d	i	Design with motor extensions				
						i_{TB}	Brake	Encoder	Brake with Encoder	Back Stop
							d_{ML}	d_{ML}	d_{ML}	d_{ML}
BG50Z-../D..05.A.	170.5	155	123	626	101.5	117	668	728.5	766	-
BG50Z-../D..06.A.	170.5	155	123	626	101.5	119	668	728.5	766	-
BG50Z-../D..07.A.	190.5	155	123	646	101.5	119	688	748.5	786	-
BG50-../D..08.A.	199.5	73	156	573	116	136.5	639	685	746.5	639
BG50Z-../D..08.A.	199.5	159	156	659	116	136.5	725	771	832.5	725
BG50-../D..08.B.	229.5	73	156	603	116	136.5	669	715	776	669
BG50Z-../D..08.B.	229.5	159	156	689	116	136.5	755	801	862	755
BG50-../D..09.A.	250.5	87.5	176	638.5	125.5	157	731.5	746	835.5	731.5
BG50Z-../D..09.A.	250.5	173.5	176	724.5	125.5	157	817.5	832	921.5	817.5
BG50-../D..09.B.	308.5	87.5	176	696.5	125.5	157	789.5	803.5	893.5	789.5
BG50Z-../D..09.B.	308.5	173.5	176	782.5	125.5	157	875.5	889.5	979.5	875.5
BG50-../D..11.A.	319	94	218	713.5	165	176	811.5	821	913.5	811.5
BG50-../D..11.B.	387	94	218	781.5	165	176	877.5	889	981.5	877.5
BG50-../D..13.A.	393	107	258	800.5	217	217	911.5	907.5	1012.5	908.5
BG50-../D..16.B.	454.5	121	310	876	243	243	1019.5	983	1123	1019.5
BG50-../D..18.B.	542	143	348	985.5	288	288	1135	1091	1238.5	1135
Dimensions in millimetres (mm)										

The actual gearbox design can vary from the geometry shown. Generate drive specific 3D and 2D geometries under www.BauerCat.com.

BG50-BG50Z

Flange with clearance holes
Code -71/

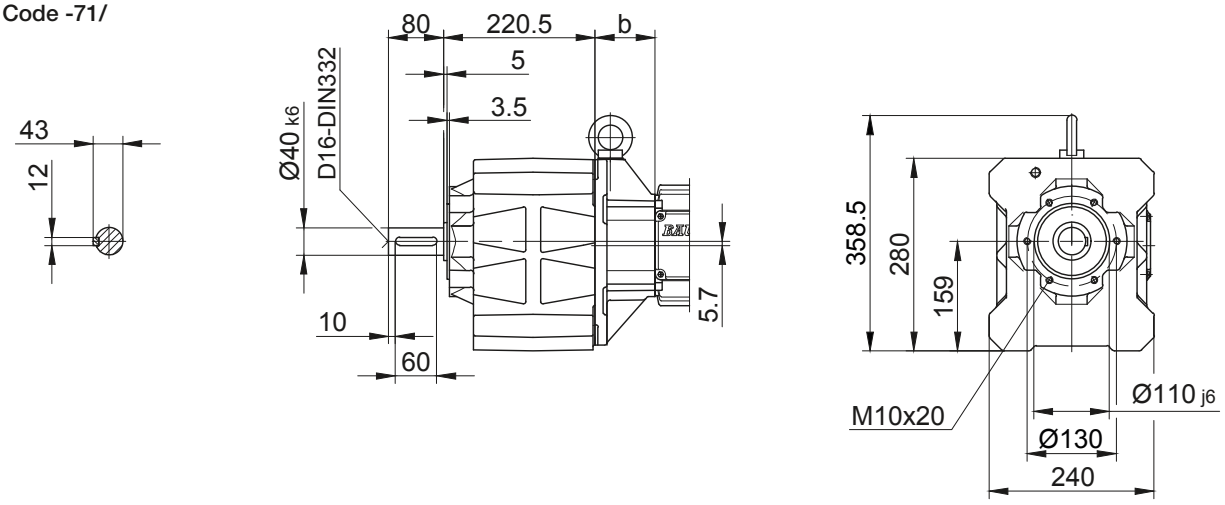

Foot with tapped holes left and right
Code -61LR/

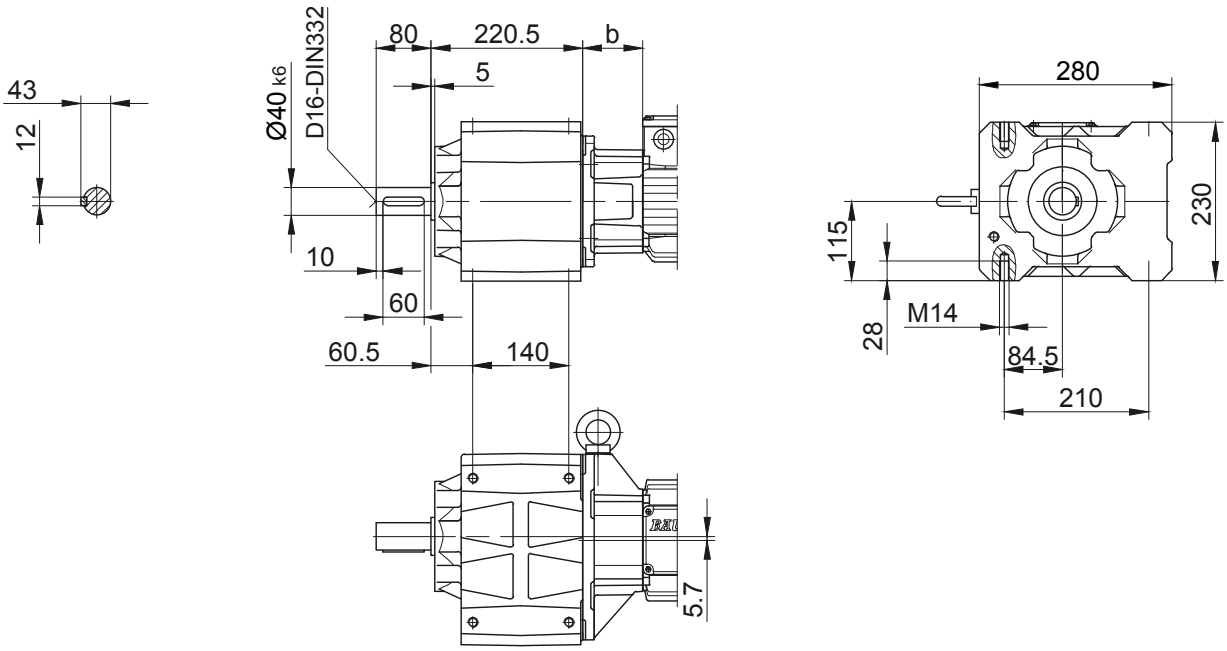

The actual gearbox design can vary from the geometry shown. Generate drive specific 3D and 2D geometries under www.BauerCat.com.

BG-series helical-geared motors

Dimension - Standard

BG60-BG60Z

Foot mounting with clearance holes

Code -11/

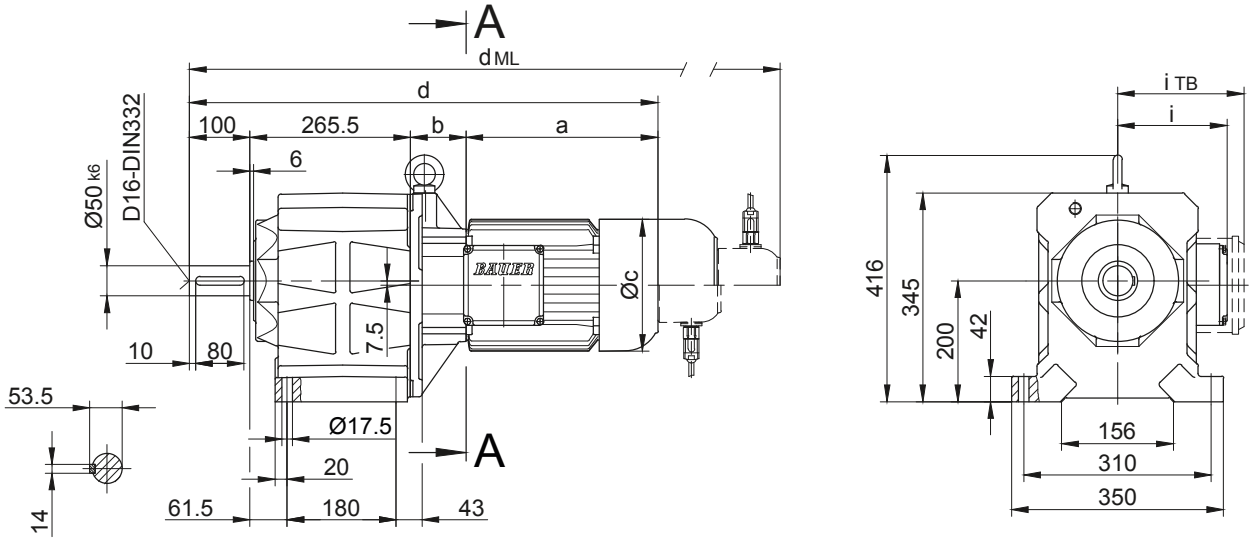

Flange with clearance holes

Code -37/

(Code-27/)

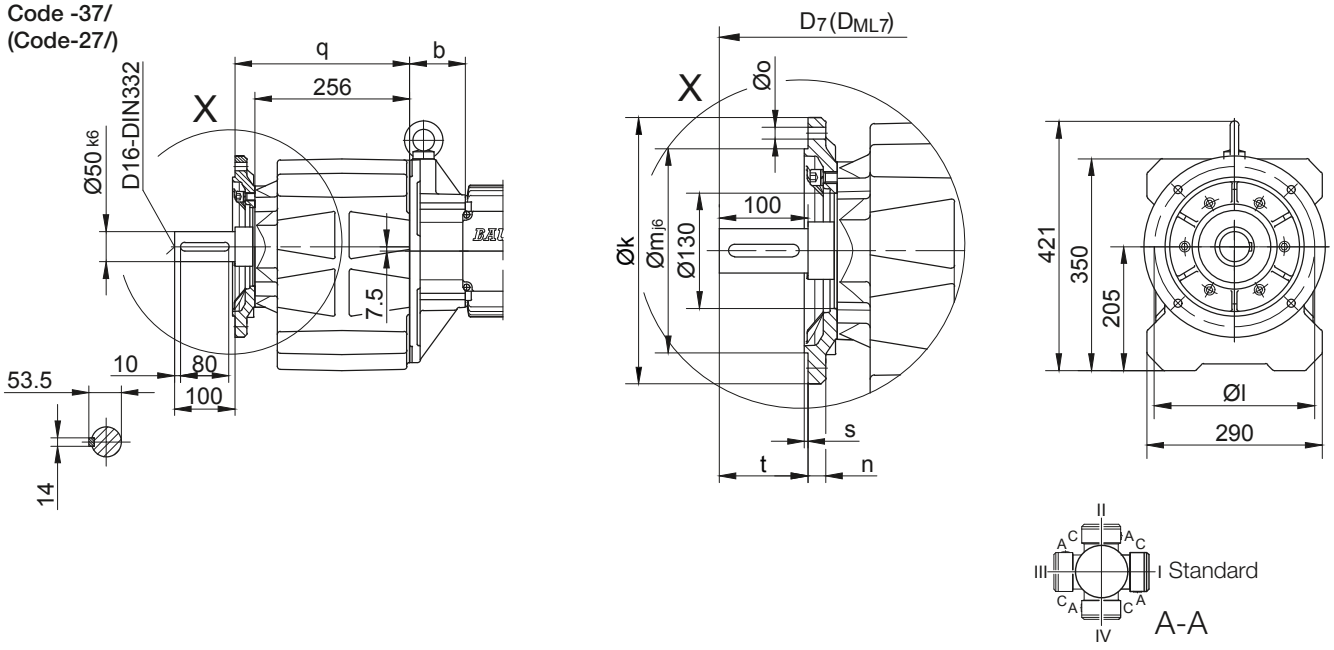

Flange Dimensions											
Type	Design	k	l	m	n	o	q	s	t	D_7	D_{ML7}
BG60..	Code -37/	300	265	230	20	13.5	289	4	100	d+23.5	d_{ML}+23.5
BG60..	Code -27/	250	215	180	16	13.5	286	4	103	d+23.5	d_{ML}+23.5
Dimensions in millimetres (mm)											

Type	a	b	c	d	i	Design with motor extensions				
						i_{TB}	Brake	Encoder	Brake with Encoder	Back Stop
							d_{ML}	d_{ML}	d_{ML}	d_{ML}
BG60Z-../D..08.A.	199.5	181	156	746	116	136.5	812	858	919.5	812
BG60Z-../D..08.B.	229.5	181	156	776	116	136.5	842	888	949	842
BG60-../D..09.A.	250.5	85.5	176	701.5	125.5	157	794.5	809	898.5	794.5
BG60Z-../D..09.A.	250.5	195.5	176	811.5	125.5	157	904.5	919	1008.5	904.5
BG60-../D..09.B.	308.5	85.5	176	759.5	125.5	157	852.5	866.5	956.5	852.5
BG60Z-../D..09.B.	308.5	195.5	176	869.5	125.5	157	962.5	976.5	1066.5	962.5
BG60-../D..11.A.	319	92	218	776.5	165	176	874.5	884	976.5	874.5
BG60Z-../D..11.A.	319	202	218	886.5	165	176	984.5	994	1086.5	984.5
BG60-../D..11.B.	387	92	218	844.5	165	176	940.5	952	1044.5	940.5
BG60Z-../D..11.B.	387	202	218	954.5	165	176	1050.5	1062	1154.5	1050.5
BG60-../D..13.A.	393	105	258	863.5	217	217	974.5	970.5	1075.5	971.5
BG60-../D..16.B.	454.5	119	310	939	243	243	1082.5	1046	1186	1082.5
BG60-../D..18.B.	542	141	348	1048.5	288	288	1198	1154	1301.5	1198
Dimensions in millimetres (mm)										

The actual gearbox design can vary from the geometry shown. Generate drive specific 3D and 2D geometries under www.BauerCat.com.

BG60-BG60Z

Flange with clearance holes
Code -71/

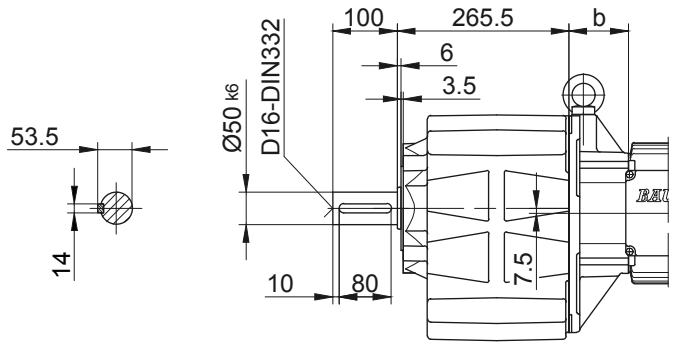

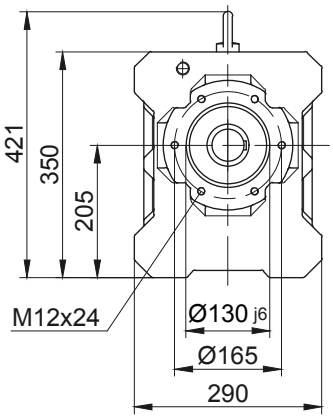

Foot with tapped holes left and right
Code -61LR/

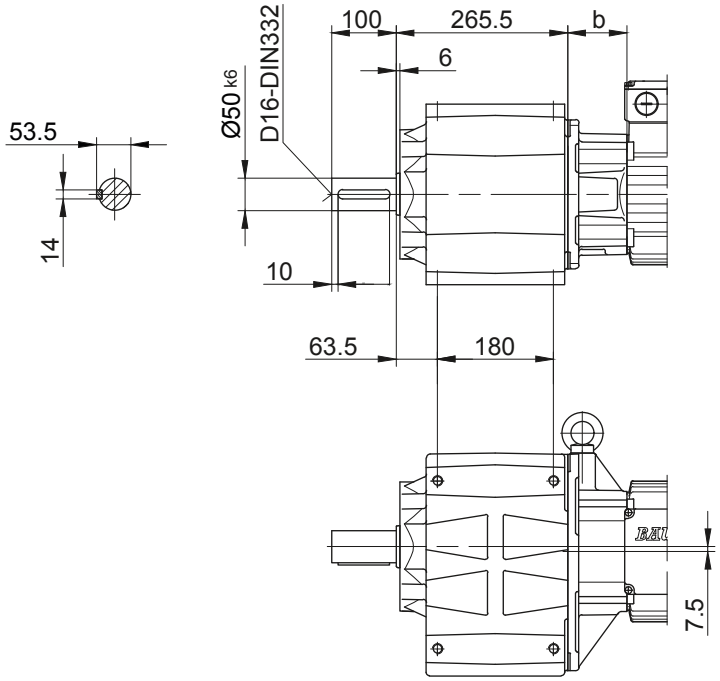

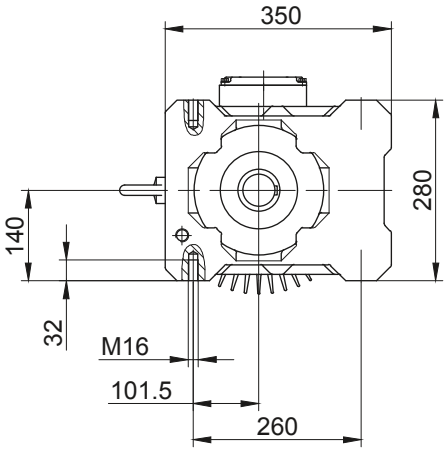

10

Dimension - Standard

BG70-BG70Z

Foot mounting with clearance holes

Code -11/

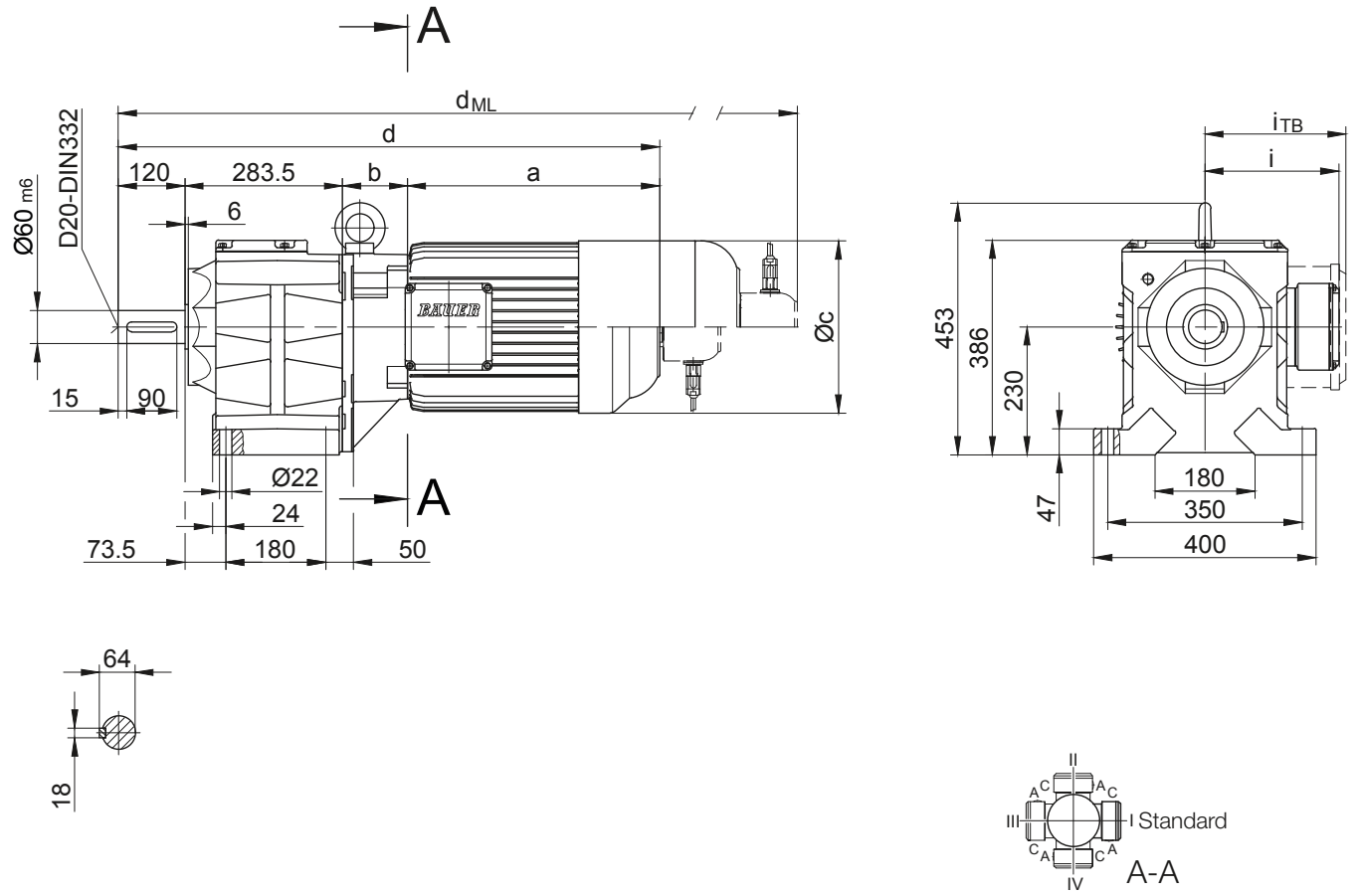

Type	a	b	c	d	i	Design with motor extensions				
						i_{TB}	Brake	Encoder	Brake with Encoder	Back Stop
							d_{ML}	d_{ML}	d_{ML}	d_{ML}
BG70Z-../D..08.A.	199.5	202	156	805	116	136.5	871	917	978.5	871
BG70Z-../D..08.B.	229.5	202	156	835	116	136.5	901	947	1008	901
BG70-../D..09.A.	250.5	83.5	176	737.5	125.5	157	830.5	845	934.5	830.5
BG70Z-../D..09.A.	250.5	216.5	176	870.5	125.5	157	963.5	978	1067.5	963.5
BG70-../D..09.B.	308.5	83.5	176	795.5	125.5	157	888.5	902.5	992.5	888.5
BG70Z-../D..09.B.	308.5	216.5	176	928.5	125.5	157	1021.5	1035.5	1125.5	1021.5
BG70-../D..11.A.	319	90	218	812.5	165	176	910.5	920	1012.5	910.5
BG70Z-../D..11.A.	319	223	218	945.5	165	176	1043.5	1053	1145.5	1043.5
BG70-../D..11.B.	387	90	218	880.5	165	176	976.5	988	1080.5	976.5
BG70Z-../D..11.B.	387	223	218	1013.5	165	176	1109.5	1121	1213.5	1109.5
BG70-../D..13.A.	393	103	258	899.5	217	217	1010.5	1006.5	1111.5	1007.5
BG70Z-../D..13.A.	393	236	258	1032.5	217	217	1143.5	1139.5	1244.5	1140.5
BG70-../D..16.B.	454.5	117	310	975	243	243	1118.5	1082	1222	1118.5
BG70Z-../D..16.B.	454.5	250	310	1108	243	243	1251.5	653.5	1355	1251.5
BG70-../D..18.B.	542	139	348	1084.5	288	288	1234	1190	1337.5	1234
BG70Z-../D..18.B.	542	272	348	1217.5	288	288	1367	1323	1470.5	1367
BG70-../D..20.A.	703.5	156	363	1263	280	280	1390.5	1368.5	1496	1263
BG70-../D..22.A.	703.5	156	363	1263	280	280	1390.5	1368.5	1496	1263

Dimensions in millimetres (mm)

The actual gearbox design can vary from the geometry shown. Generate drive specific 3D and 2D geometries under www.BauerCat.com.

BG70-BG70Z

Flange with clearance holes
Code -37/
(Code -27/)

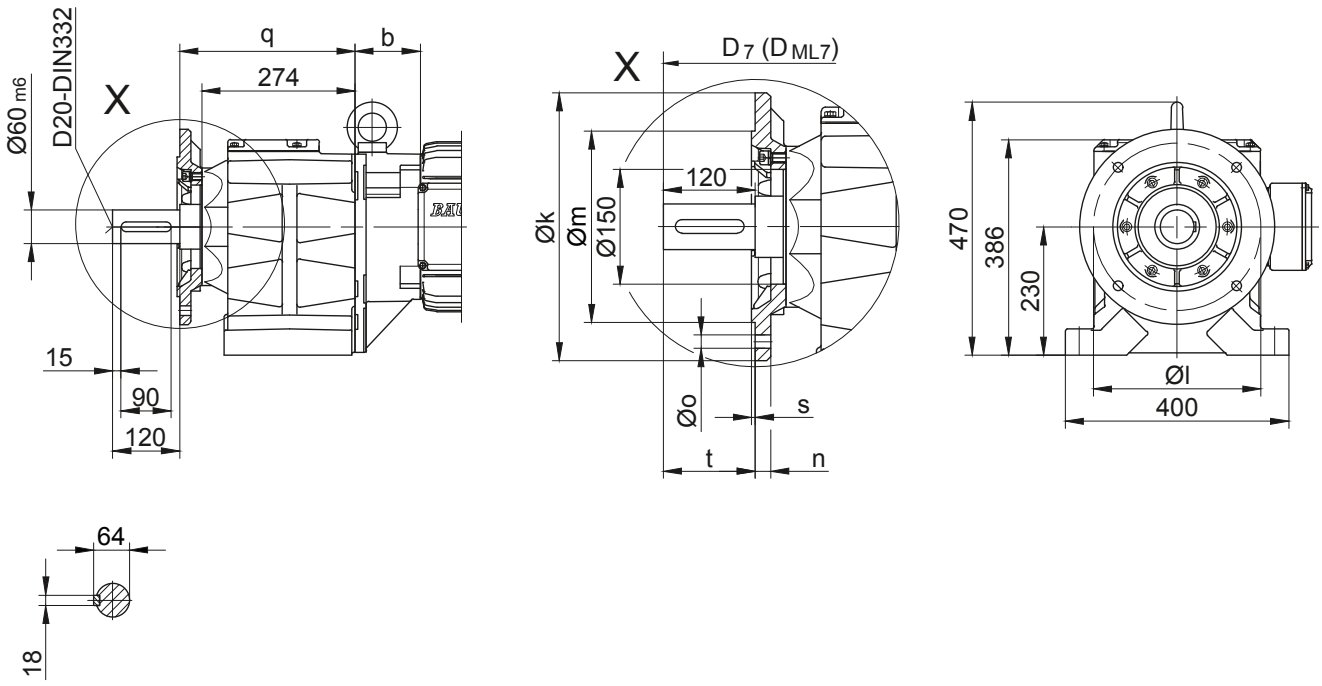

Flange with clearance holes
Code -71/

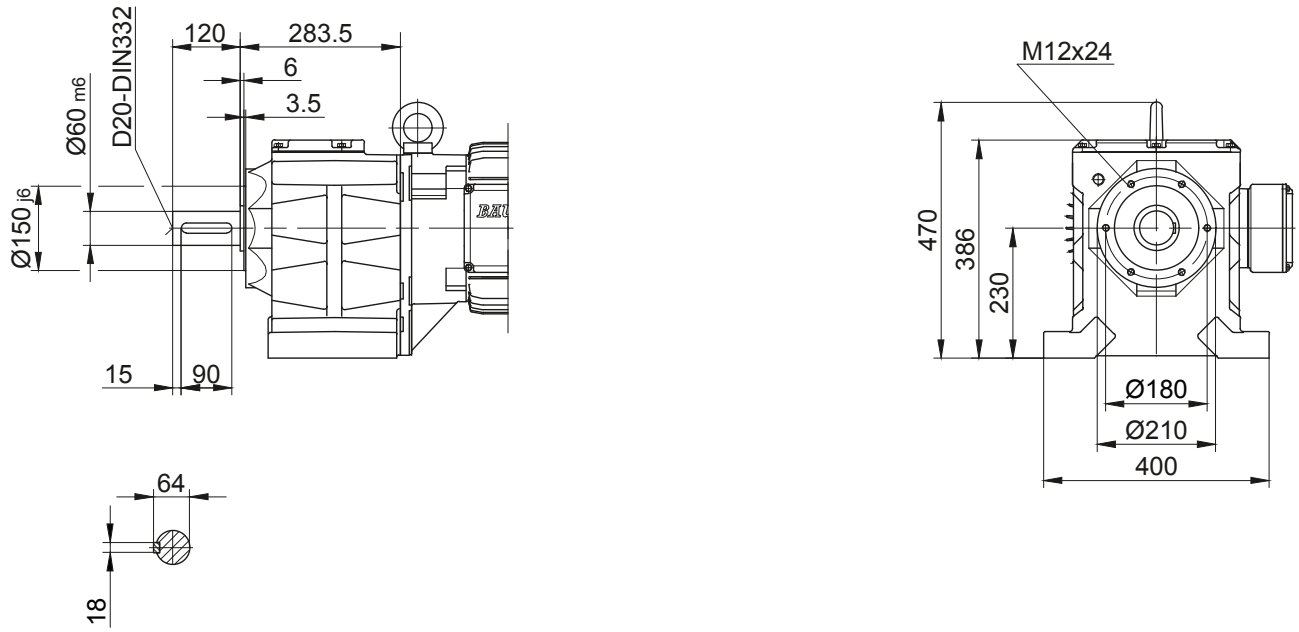

Flange Dimensions											
Type	Design	k	l	m	n	o	q	s	t	D_7	D_{ML7}
BG70..	Code -37/	350	300	250	20	17.5	314	5	120	d+30.5	d_{ML}+30.5
BG70..	Code -27/	300	265	230	20	13.5	322	4	112	d+30.5	d_{ML}+30.5
Dimensions in millimetres (mm)											

The actual gearbox design can vary from the geometry shown. Generate drive specific 3D and 2D geometries under www.BauerCat.com.

BG-series helical-geared motors

Dimension - Standard

BG80-BG80Z

Foot mounting with clearance holes

Code -11/

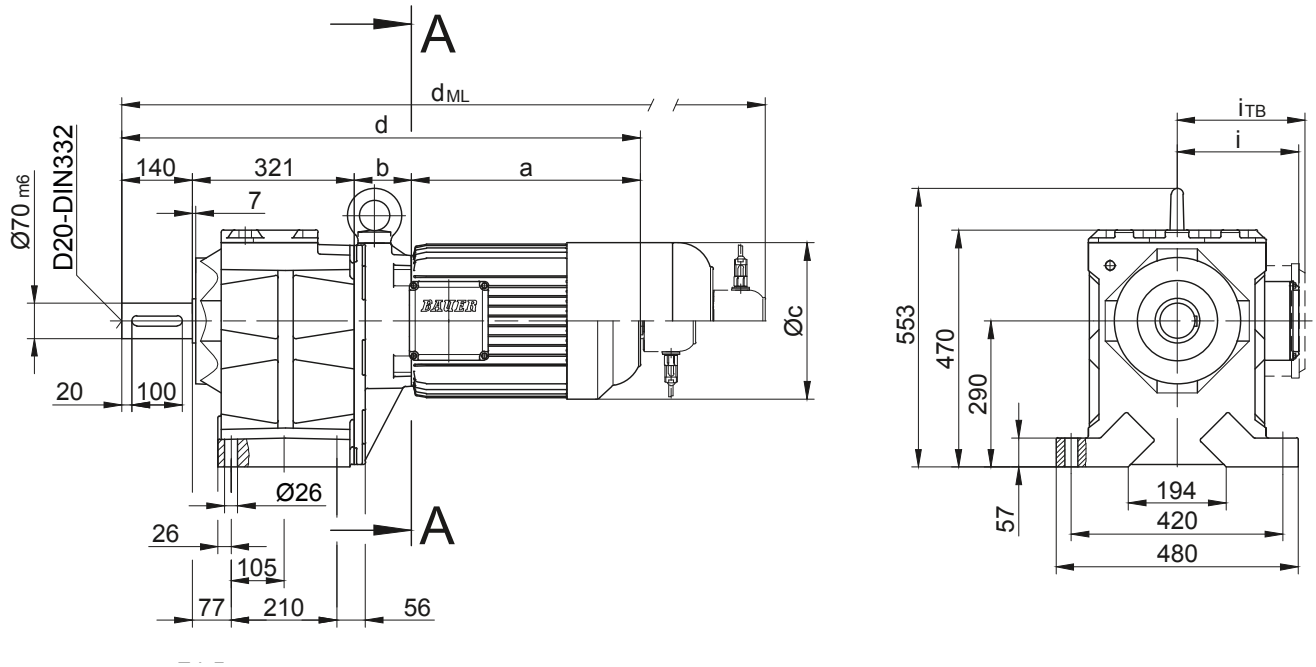

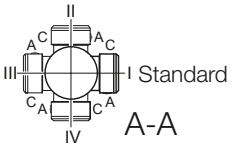

10

Type	a	b	c	d	i	Design with motor extensions				
						i_{TB}	Brake	Encoder	Brake with Encoder	Back Stop
							d_{ML}	d_{ML}	d_{ML}	d_{ML}
BG80Z-../D..09.A.	250.5	252.5	176	964	125.5	157	1057	1071.5	1161	1057
BG80Z-../D..09.B.	308.5	252.5	176	1022	125.5	157	1115	1129	1219	1115
BG80-../D..11.A.	319	87	218	867	165	176	965	974.5	1067	965
BG80Z-../D..11.A.	319	259	218	1039	165	176	1137	1146.5	1067	965
BG80-../D..11.B.	387	87	218	935	165	176	1031	1042.5	1135	1031
BG80Z-../D..11.B.	387	259	218	1107	165	176	1203	1214.5	1307	1203
BG80-../D..13.A.	393	100	258	954	217	217	1065	1061	1166	1062
BG80Z-../D..13.A.	393	272	258	1126	217	217	1237	1233	1338	1234
BG80-../D..16.B.	454.5	114	310	1029.5	243	243	1173	1136.5	1276.5	1173
BG80Z-../D..16.B.	454.5	286	310	1201.5	243	243	1345	1308.5	1448.5	1345
BG80-../D..18.B.	542	136	348	1139	288	288	1195	1158.5	1298.5	1195
BG80Z-../D..18.B.	542	308	348	1311	288	288	1367	1330.5	1470.5	1367
BG80-../D..20.A.	703.5	153	363	1317.5	280	280	1445	1423	1550.5	1317.5
BG80-../D..22.A.	703.5	153	363	1317.5	280	280	1445	1423	1550.5	1317.5

Dimensions in millimetres (mm)

The actual gearbox design can vary from the geometry shown. Generate drive specific 3D and 2D geometries under www.BauerCat.com.

BG80-BG80Z

Flange with clearance holes
Code -37/
(Code -27/)
(Code -47/)

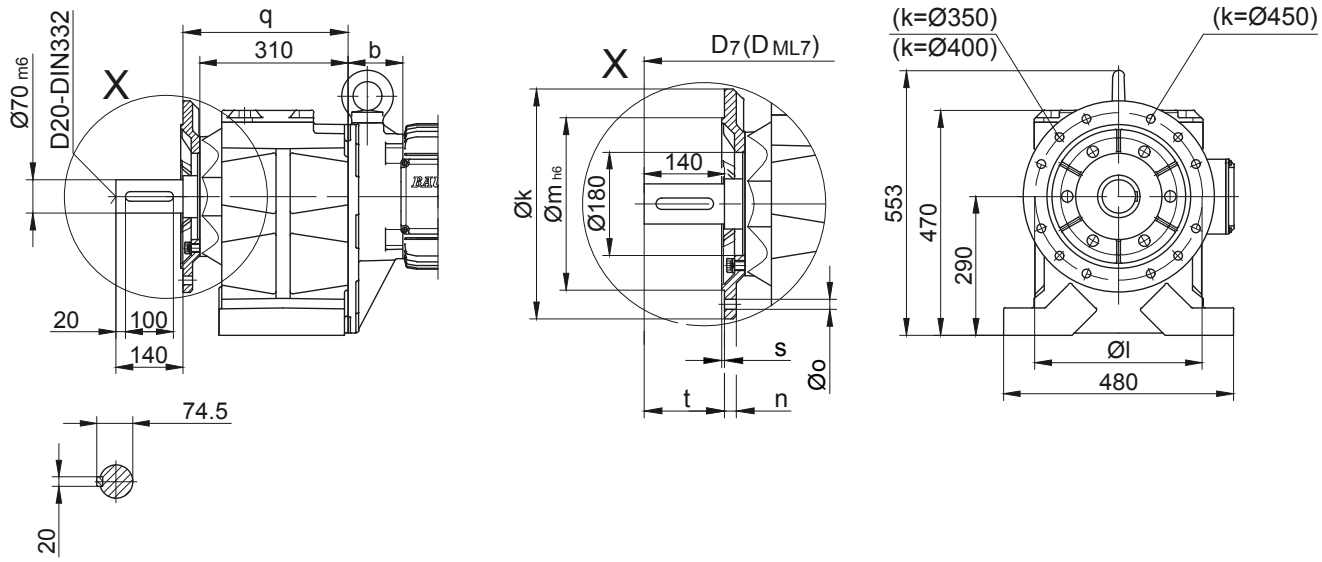

Flange with clearance holes
Code -71/

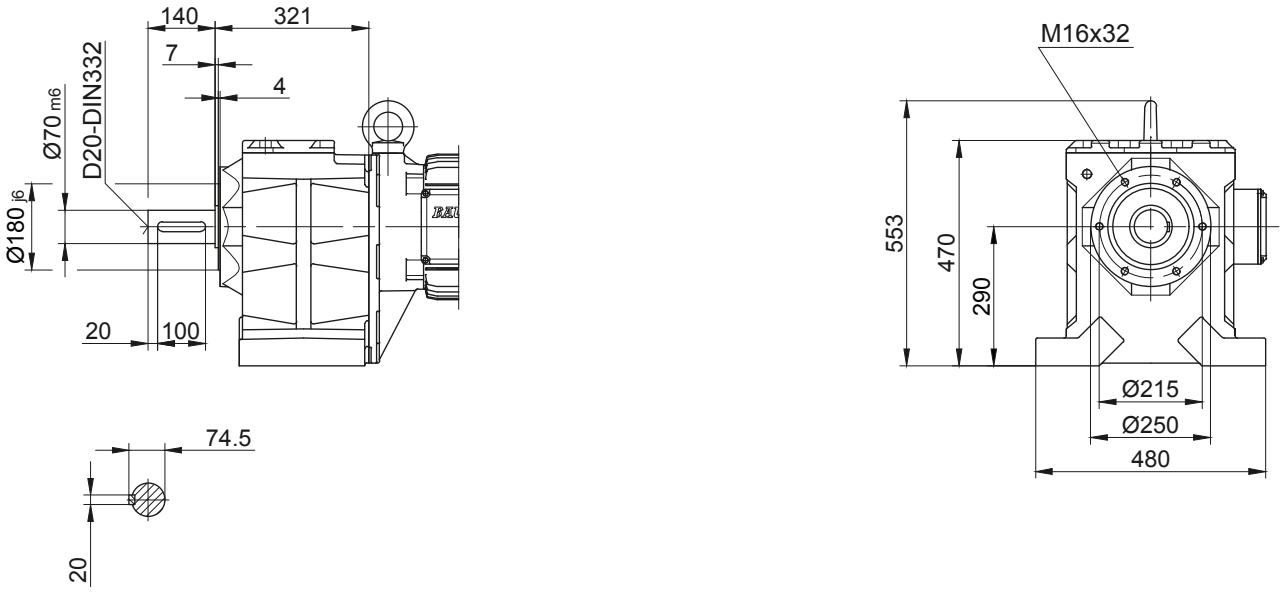

Flange Dimensions											
Type	Design	k	l	m	n	o	q	s	t	D_7	D_{ML7}
BG80..	Code -37/	400	350	300	20	4 x 17.5	345	5	140	d+24	d_{ML}+24
BG80..	Code -27/	350	300	250	20	4 x 17.5	345	5	140	d+24	d_{ML}+24
BG80..	Code -47/	450	400	350	22	8 x 17.5	355	5	130	d+24	d_{ML}+24
Dimensions in millimetres (mm)											

The actual gearbox design can vary from the geometry shown. Generate drive specific 3D and 2D geometries under www.BauerCat.com.

BG-series helical-geared motors

Dimension - Standard

BG90-BG90Z

Foot mounting with clearance holes

Code -11/

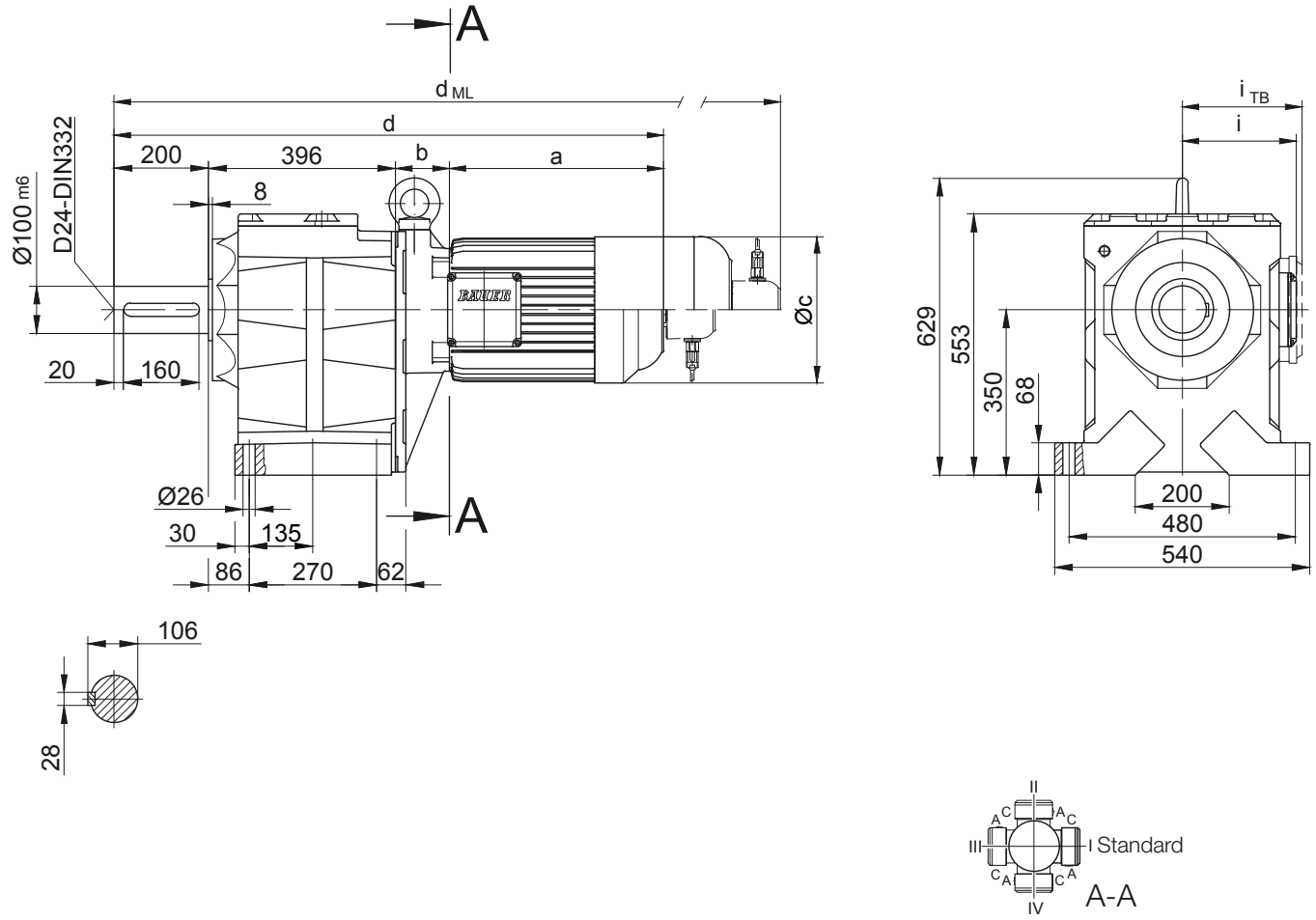

Type	a	b	c	d	i	Design with motor extensions				
						i_{TB}	Brake	Encoder	Brake with Encoder	Back Stop
							d_{ML}	d_{ML}	d_{ML}	d_{ML}
BG90Z-../D..09.A.	250.5	267	176	1113.5	125.5	157	1206.5	1221	1310.5	1206.5
BG90Z-../D..09.B.	308.5	267	176	1171.5	125.5	157	1264.5	1278.5	1368.5	1264.5
BG90Z-../D..11.A.	319	273.5	218	1188.5	165	176	1286.5	1296	1388.5	1286.5
BG90Z-../D..11.B.	387	273.5	218	1256.5	165	176	1352.5	1364	1456.5	1352.5
BG90-../D..13.A.	393	100	258	1089	217	217	1200	1196	1301	1197
BG90Z-../D..13.A.	393	286.5	258	1275.5	217	217	1386.5	1382.5	1487.5	1383.5
BG90-../D..16.B.	454.5	114	310	1164.5	243	243	1308	1271.5	1411.5	1308
BG90Z-../D..16.B.	454.5	300.5	310	1351	243	243	1494.5	1458	1598	1494.5
BG90-../D..18.B.	542	136	348	1274	288	288	1423.5	1379.5	1527	1423.5
BG90Z-../D..18.B.	542	322.5	348	1460.5	288	288	1610	1566	1713.5	1610
BG90-../D..20.A.	703.5	153	363	1452.5	280	280	1580	1498	1685.5	1452.5
BG90-../D..22.A.	703.5	153	363	1452.5	280	280	1580	1558	1685.5	1452.5

Dimensions in millimetres (mm)

The actual gearbox design can vary from the geometry shown. Generate drive specific 3D and 2D geometries under www.BauerCat.com.

BG90-BG90Z

Flange with clearance holes
Code -37/
(Code -47/)

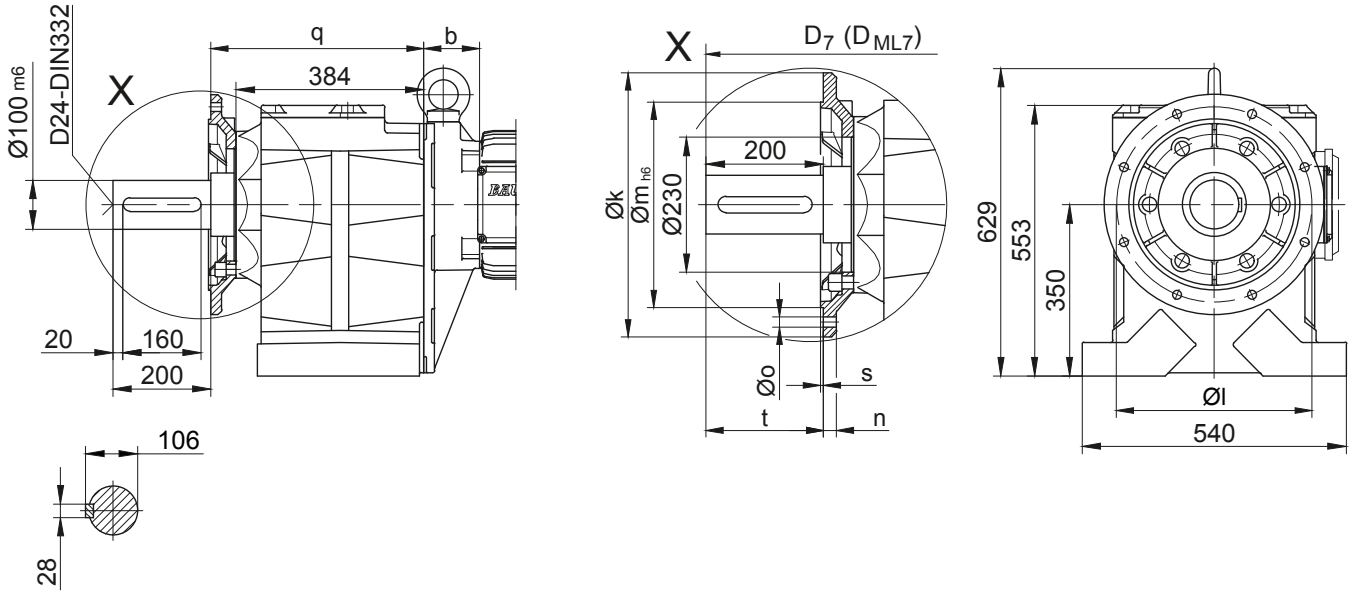

Flange with clearance holes
Code -71/

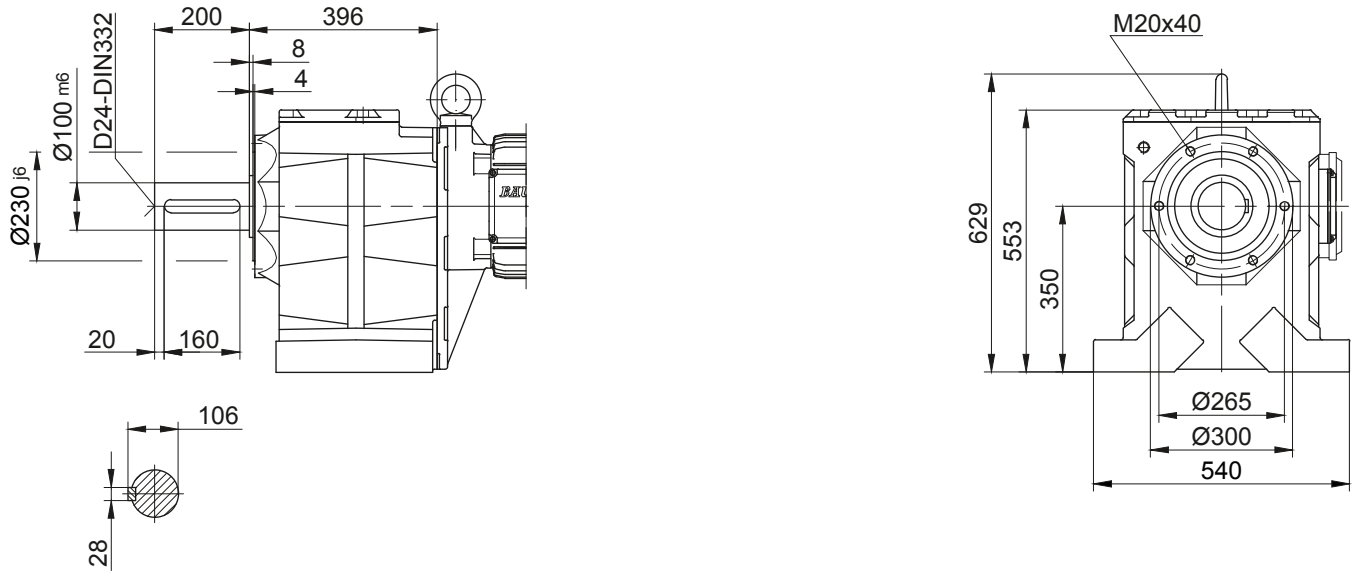

Flange Dimensions											
Type	Design	k	l	m	n	o	q	s	t	D_7	D_{ML7}
BG90..	Code -37/	450	400	350	22	17.5	439	5	200	d+43	d_{ML}+43
BG90..	Code -47/	550	500	450	22	17.5	444	5	195	d+43	d_{ML}+43
Dimensions in millimetres (mm)											

The actual gearbox design can vary from the geometry shown. Generate drive specific 3D and 2D geometries under www.BauerCat.com.

BG-series helical-geared motors

Dimension - Standard

BG100-BG100Z

Foot mounting with clearance holes

Code -11/

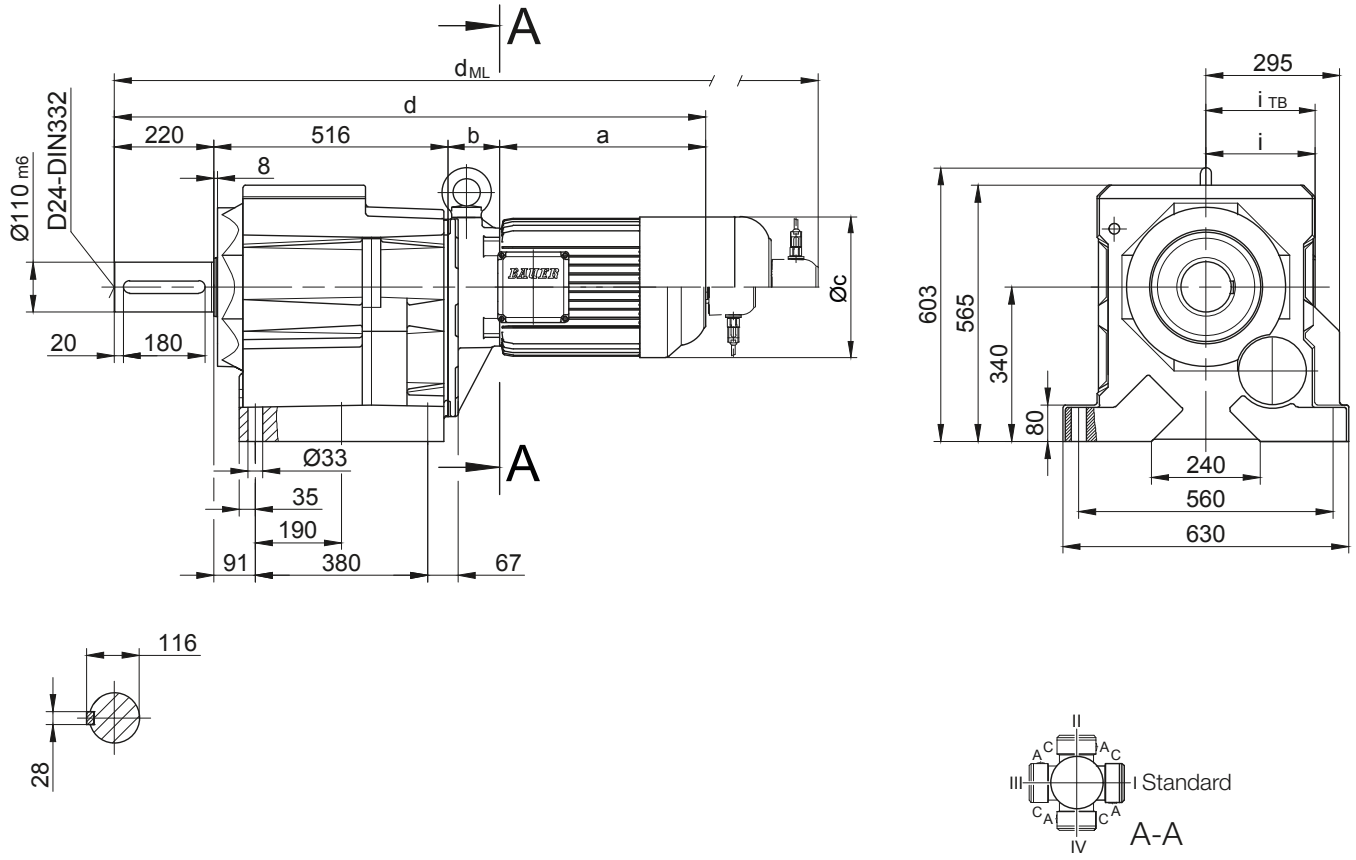

10

Type	a	b	c	d	i	Design with motor extensions				
						i_{TB}	Brake	Encoder	Brake with Encoder	Back Stop
							d_{ML}	d_{ML}	d_{ML}	d_{ML}
BG100Z-../D..09.A.	250.5	252.5	176	1239	125.5	157	1332	1346.5	1436	1332
BG100Z-../D..09.B.	308.5	252.5	176	1297	125.5	157	1390	1404	1494	1390
BG100-../D..11.A.	319	87	218	1142	165	176	1240	1249.5	1342	1240
BG100Z-../D..11.A.	319	259	218	1314	165	176	1412	1421.5	1514	1412
BG100-../D..11.B.	387	87	218	1210	165	176	1306	1317.5	1410	1306
BG100Z-../D..11.B.	387	259	218	1382	165	176	1478	1489.5	1582	1478
BG100-../D..13.A.	393	100	258	1229	217	217	1340	1336	1441	1337
BG100Z-../D..13.A.	393	272	258	1401	217	217	1512	1508	1613	1509
BG100-../D..16.B.	454.5	114	310	1304.5	243	243	1448	1411.5	1551.5	1448
BG100Z-../D..16.B.	454.5	286	310	1476.5	243	243	1620	1583.5	1723.5	1620
BG100-../D..18.B.	542	136	348	1414	288	288	1470	1519.5	1573.5	1470
BG100Z-../D..18.B.	542	308	348	1586	288	288	1735.5	1691.5	1839	1735.5
BG100-../D..20.A.	703.5	153	363	1592.5	280	280	1720	1698	1825.5	1592.5
BG100-../D..22.A.	703.5	153	363	1592.5	280	280	1720	1698	1825.5	1592.5

Dimensions in millimetres (mm)

The actual gearbox design can vary from the geometry shown. Generate drive specific 3D and 2D geometries under www.BauerCat.com.

BG100-BG100Z

Flange with clearance holes
Code -37/
(Code -47/)

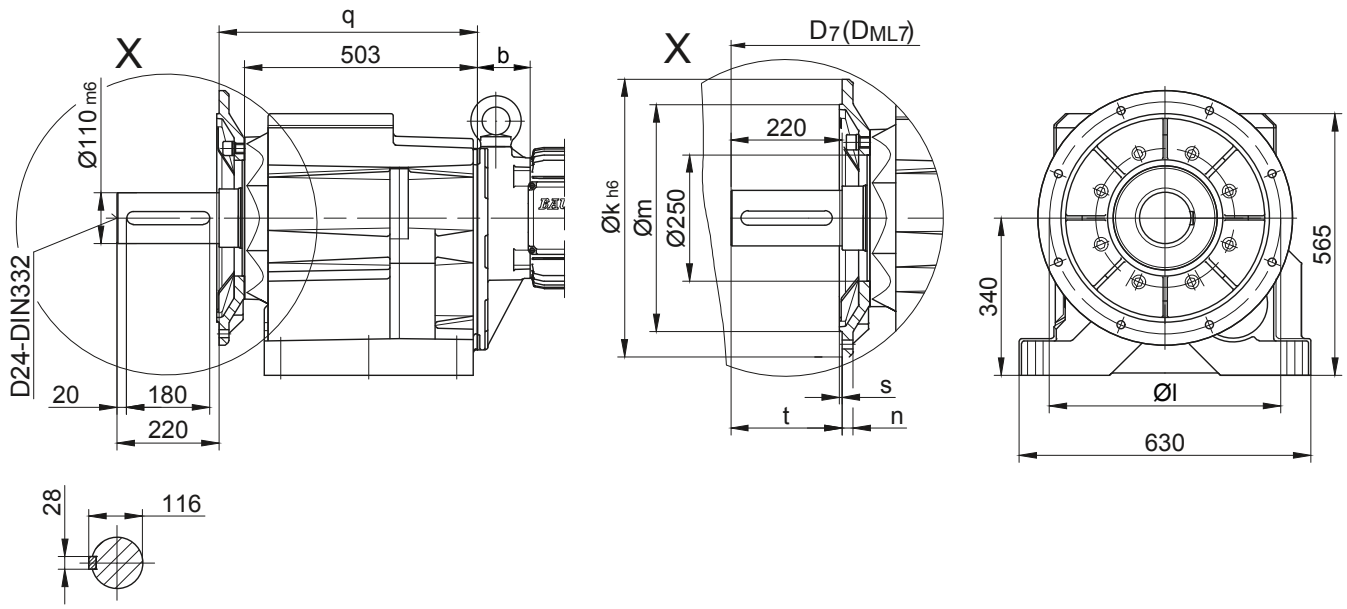

Flange with clearance holes
Code -71/

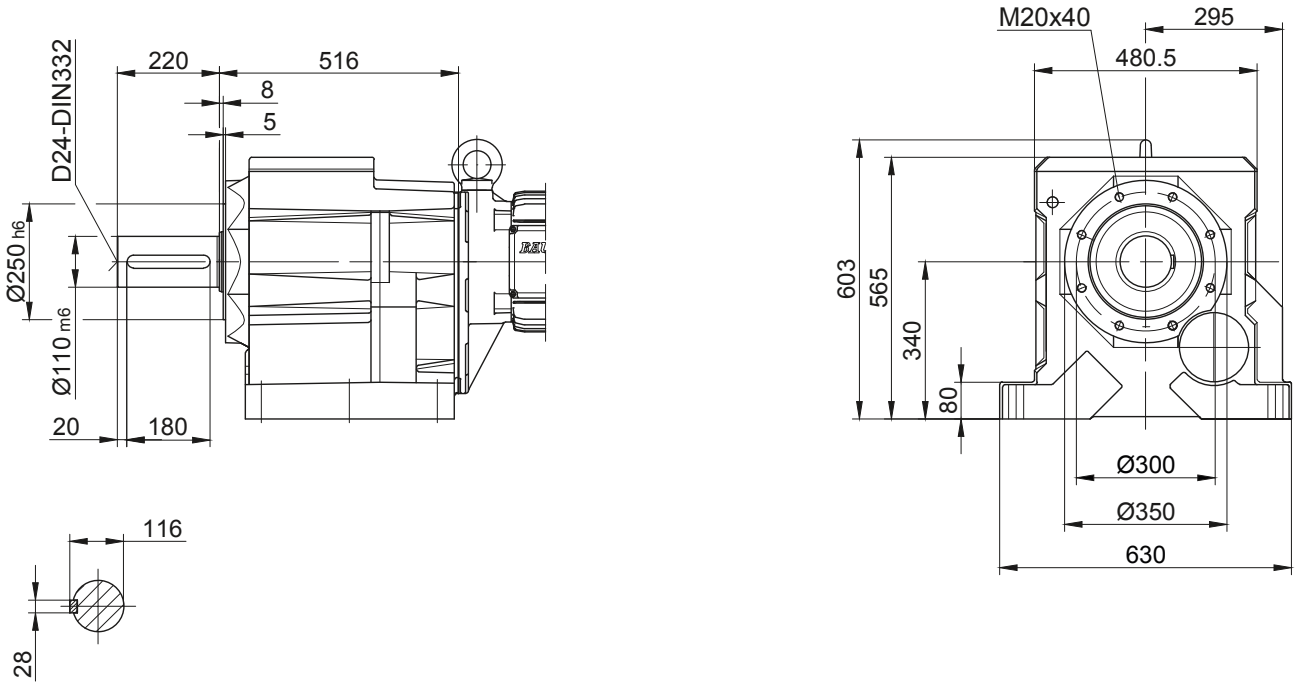

Flange Dimensions											
Type	Design	k	l	m	n	o	q	s	t	D_7	D_{ML7}
BG100..	Code -37/	550	500	450	22	17.5	558	5	220	d+42	d_{ML}+42
BG100..	Code -47/	660	600	550	25	22	552	6	226	d+42	d_{ML}+42
Dimensions in millimetres (mm)											

The actual gearbox design can vary from the geometry shown. Generate drive specific 3D and 2D geometries under www.BauerCat.com.

BG06G04

Foot mounting

Code -11/

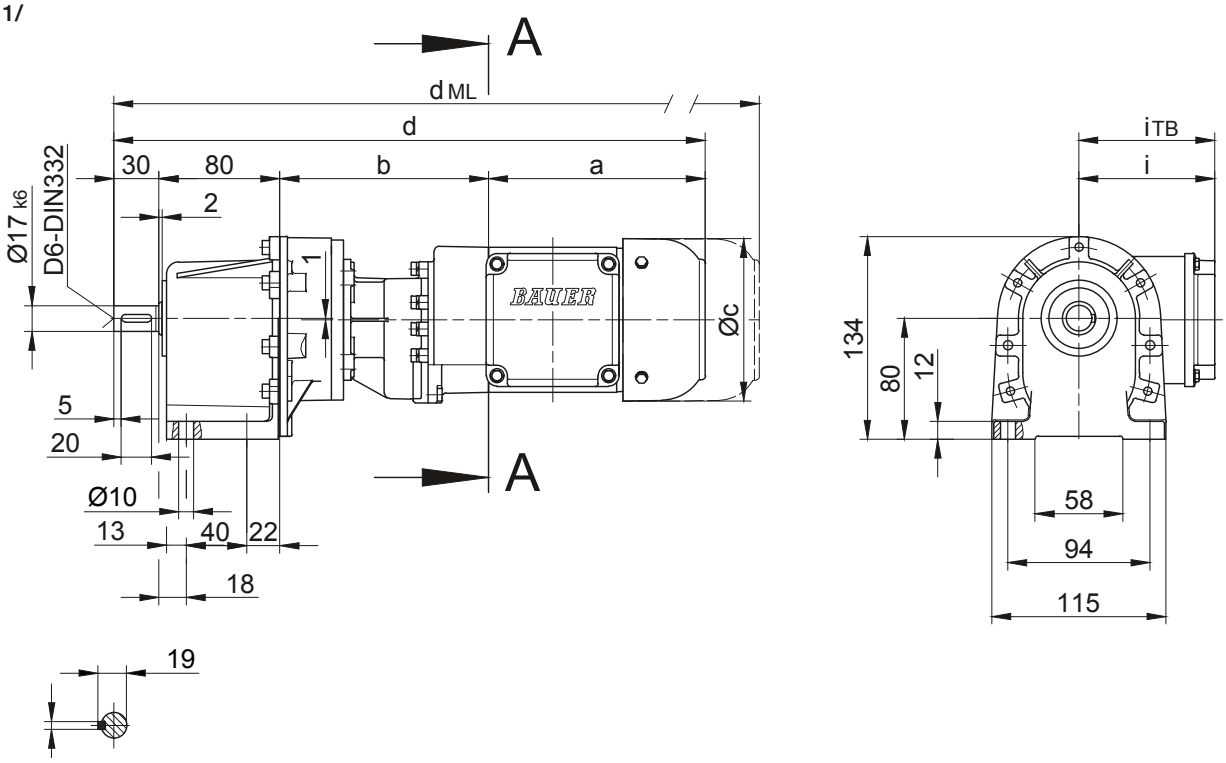

Flange with clearance holes

Code -31/

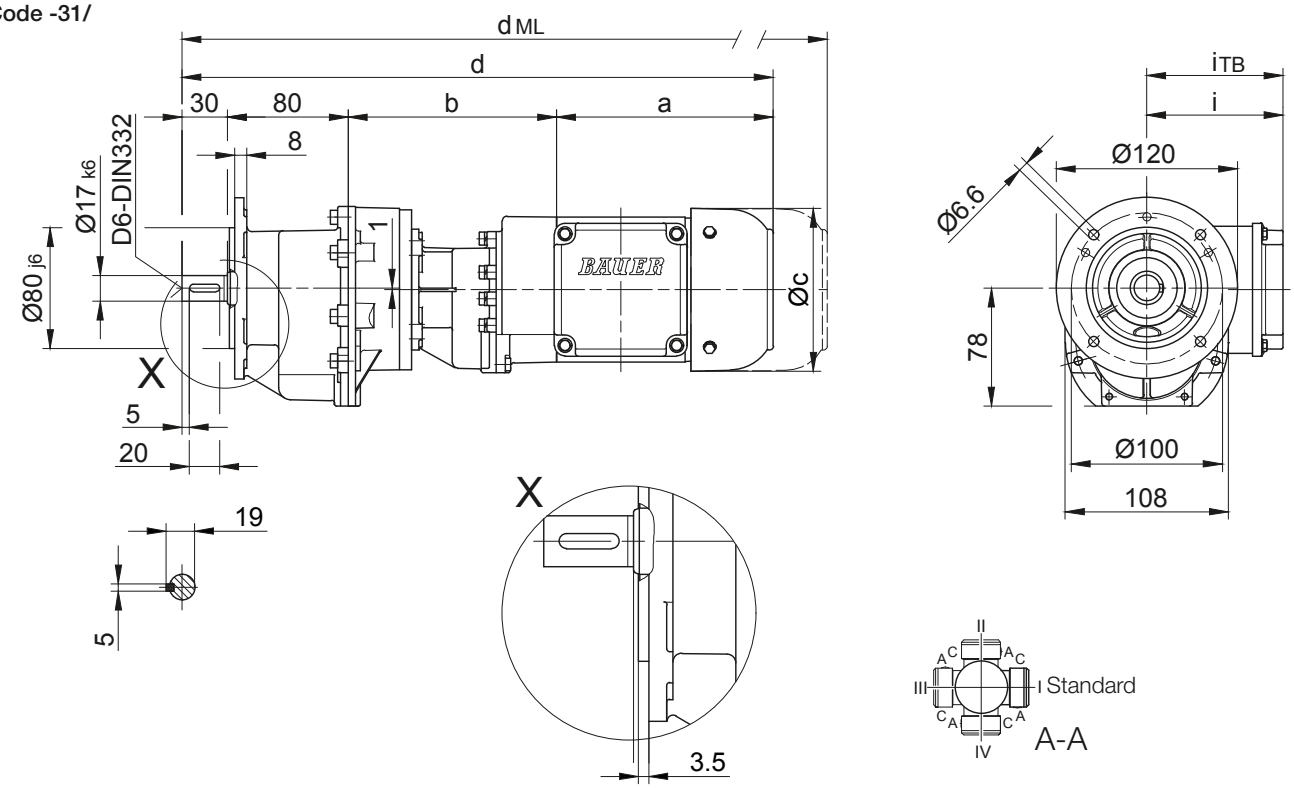

Type	a	b	c	d	i	Design with motor extensions				
						i_{TB}	Brake	Encoder	Brake with Encoder	Back Stop
							d_{ML}	d_{ML}	d_{ML}	d_{ML}
BG06G04-../D04.A.	142.5	134	110.5	386.5	90	112	430	474	517.5	-
Dimensions in millimetres (mm)										

The actual gearbox design can vary from the geometry shown. Generate drive specific 3D and 2D geometries under www.BauerCat.com.

BG-series helical-geared motors

Dimension - Tandem Gearbox

BG10G06

Foot mounting with clearance holes

Code -11/

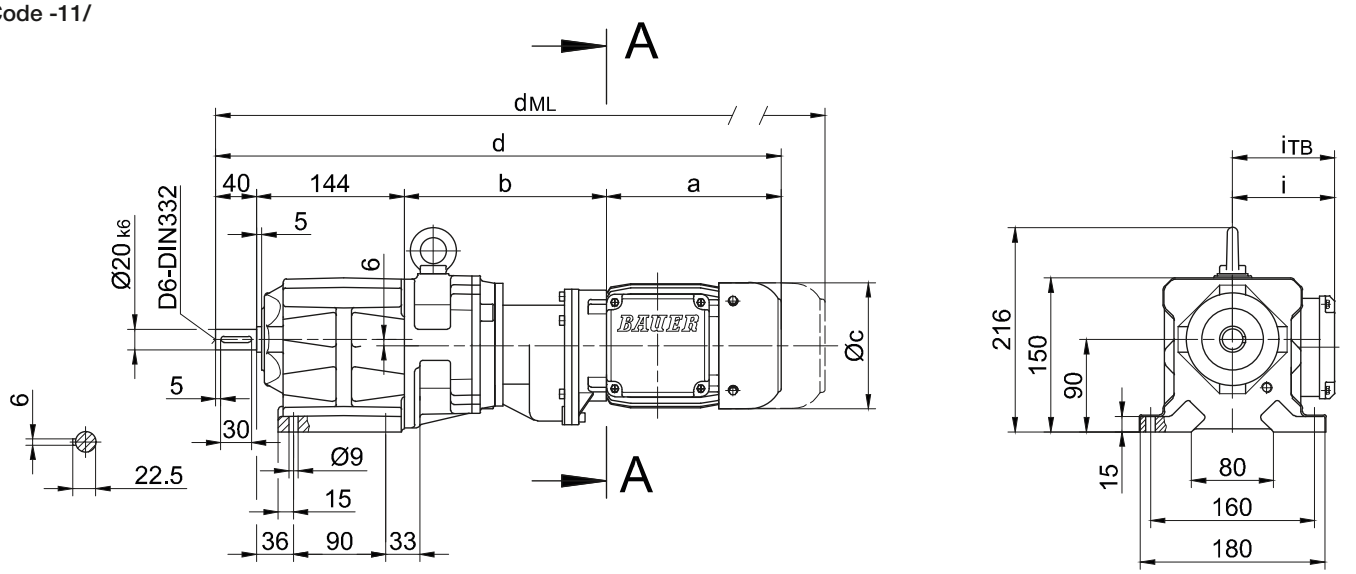

Flange with clearance holes

Code -37/

(Code -27/)

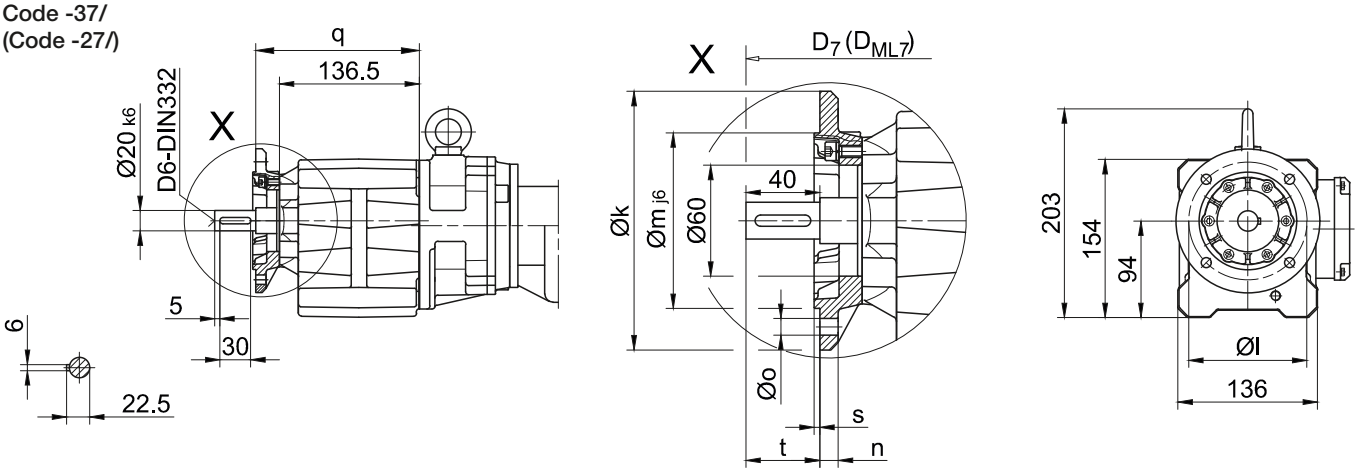

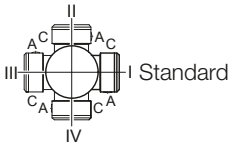

Flange Dimensions											
Type	Design	k	l	m	n	o	q	s	t	D_7	D_{ML7}
BG10..	Code -37V/	140	115	95	10	9	159.5	3	40	d+15.5	d_{ML}+15.5
BG10..	Code -27V/	120	100	80	8	6.6	154.5	3	45	d+15.5	d_{ML}+15.5
Dimensions in millimetres (mm)											

Type	a	b	c	d	i	Design with motor extensions				
						i_{TB}	Brake	Encoder	Brake with Encoder	Back Stop
							d_{ML}	d_{ML}	d_{ML}	d_{ML}
BG10G06-../D04.A.	142.5	195	110.5	521.5	90	112	565	609	652.5	-
BG10G06-../D..05.A.	170.5	197	123	551.5	101.5	117	593.5	654	691.5	-
BG10G06-../D..06.A.	170.5	197	123	551.5	101.5	119	593.5	654	691.5	-
BG10G06-../D..07.A.	190.5	197	123	571.5	101.5	119	613.5	674	711.5	-
BG10G06-../D..08.A.	199.5	241	156	624.5	116	136.5	690.5	736.5	798	690.5
BG10G06-../D..08.B.	229.5	241	156	654.5	116	136.5	720.5	766.5	827.5	720.5
Dimensions in millimetres (mm)										

The actual gearbox design can vary from the geometry shown. Generate drive specific 3D and 2D geometries under www.BauerCat.com.

BG10G06

Flange with clearance holes
Code -71/

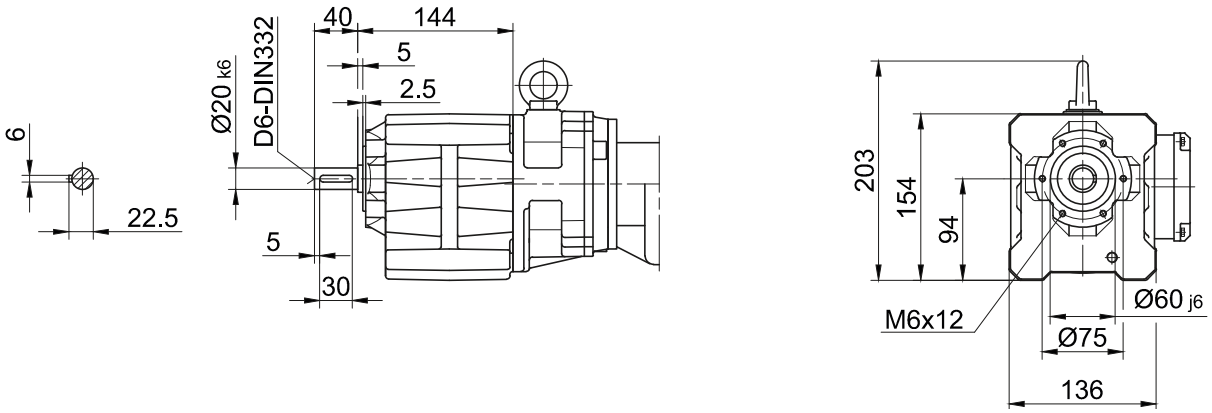

Foot with tapped holes left and right
Code -61LR/

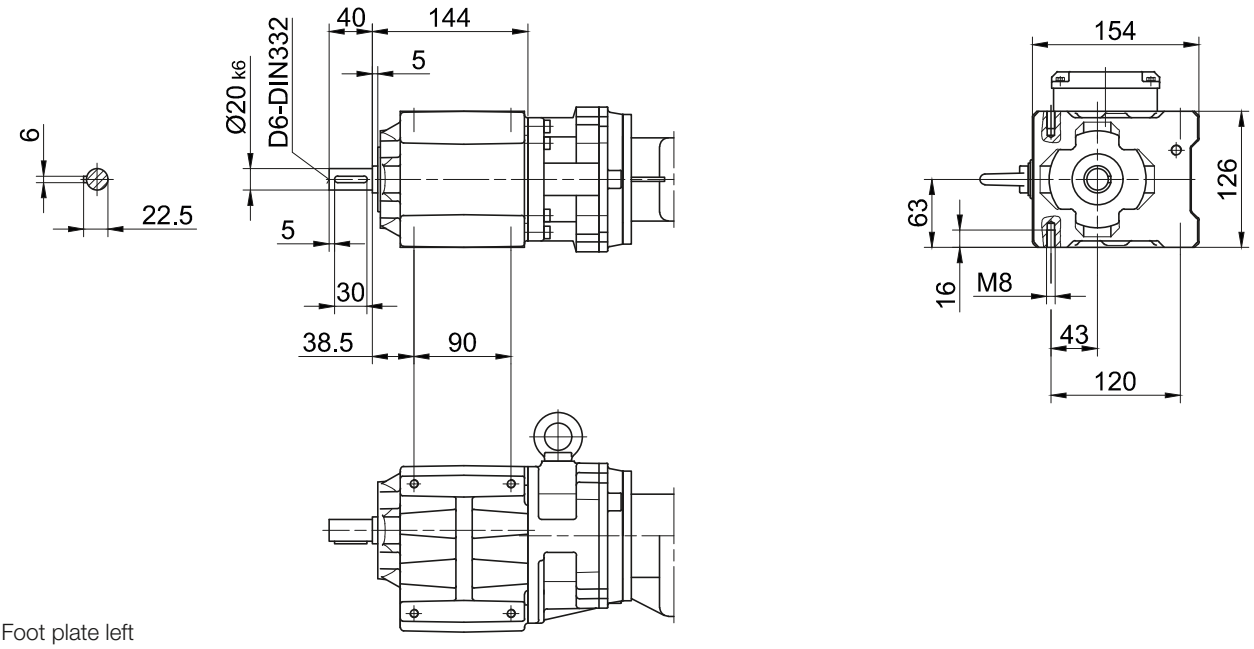

Foot plate left
Code -91L/

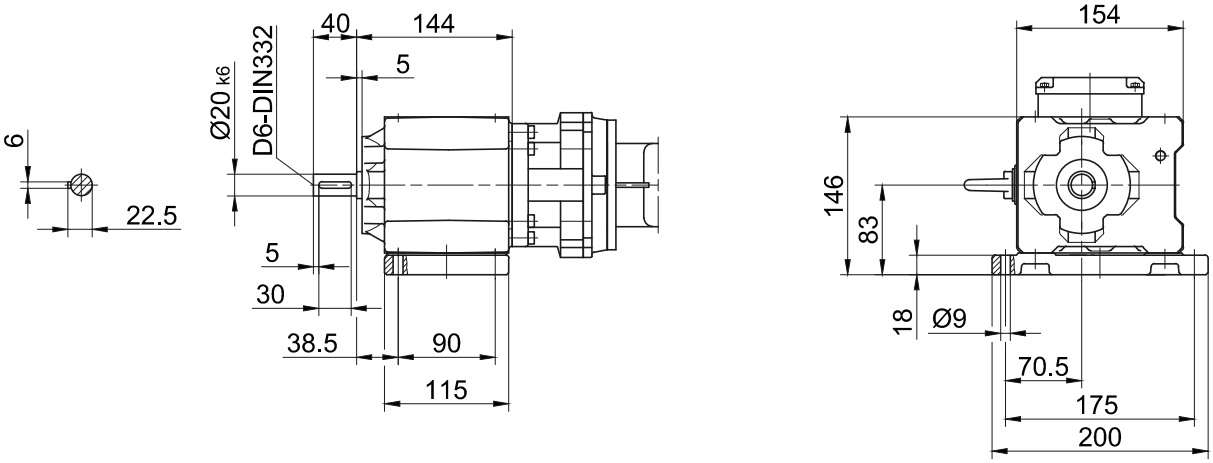

The actual gearbox design can vary from the geometry shown. Generate drive specific 3D and 2D geometries under www.BauerCat.com.

BG-series helical-geared motors

Dimension - Tandem Gearbox

BG10XG06

Foot mounting with clearance holes

Code -11/

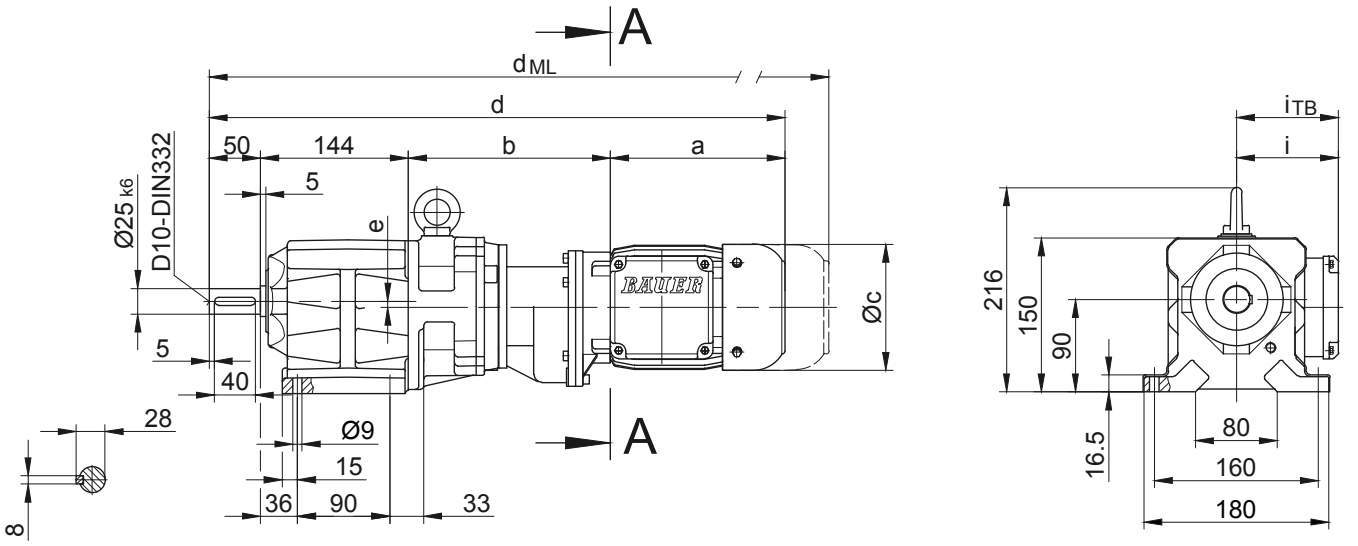

Flange with clearance holes

Code -37/

(Code -27/)

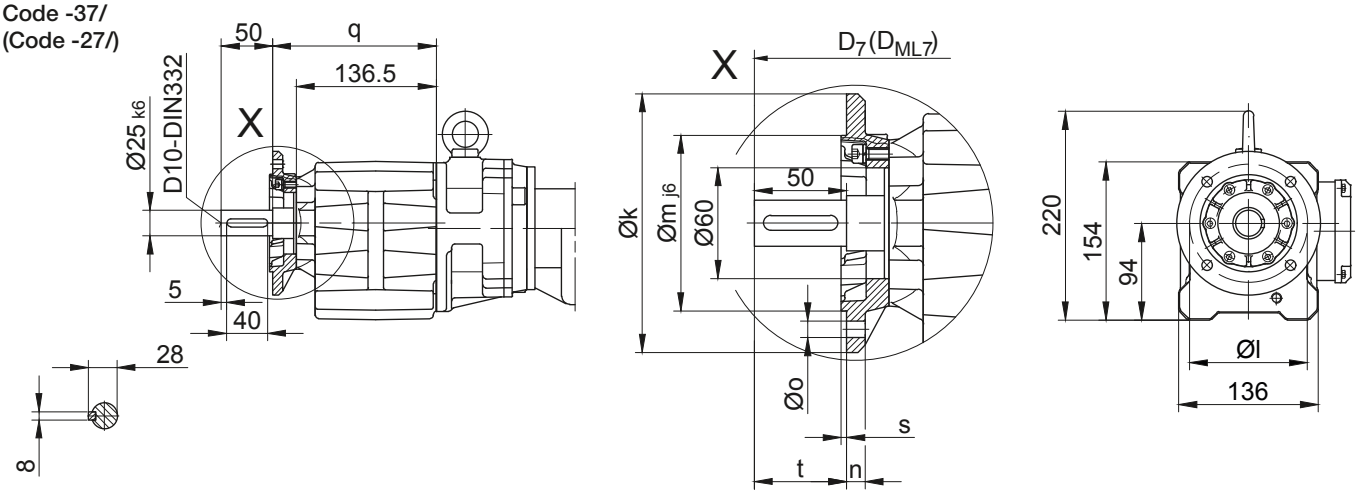

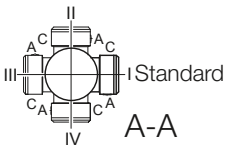

Flange Dimensions											
Type	Design	k	l	m	n	o	q	s	t	D_7	D_{ML7}
BG10X..	Code -37V/	140	115	95	10	9	159.5	3	50	d+15.5	d_{ML}+15.5
BG10X..	Code -27V/	120	100	80	8	6.6	154.5	3	55	d+15.5	d_{ML}+15.5
Dimensions in millimetres (mm)											

Type	a	b	c	d	i	Design with motor extensions				
						i_{TB}	Brake	Encoder	Brake with Encoder	Back Stop
							d_{ML}	d_{ML}	d_{ML}	d_{ML}
BG10XG06-../D04.A.	142.5	195	110.5	531.5	90	112	575	619	662.5	-
BG10XG06-../D..05.A.	170.5	197	123	561.5	101.5	117	603.5	664	701.5	-
BG10XG06-../D..06.A.	170.5	197	123	561.5	101.5	119	603.5	664	701.5	-
BG10XG06-../D..07.A.	190.5	197	123	581.5	101.5	119	623.5	684	721.5	-
BG10XG06-../D..08.A.	199.5	241	156	634.5	116	136.5	700.5	746.5	808	700.5
BG10XG06-../D..08.B.	229.5	241	156	664.5	116	136.5	730.5	776.5	837.5	730.5
Dimensions in millimetres (mm)										

The actual gearbox design can vary from the geometry shown. Generate drive specific 3D and 2D geometries under www.BauerCat.com.

BG10XG06

Flange with clearance holes
Code -71/

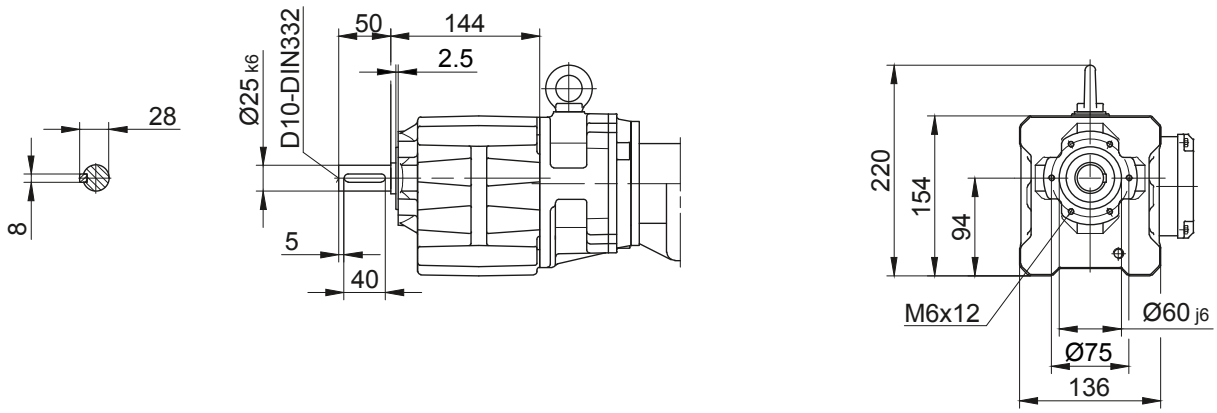

Foot with tapped holes left and right
Code -61LR/

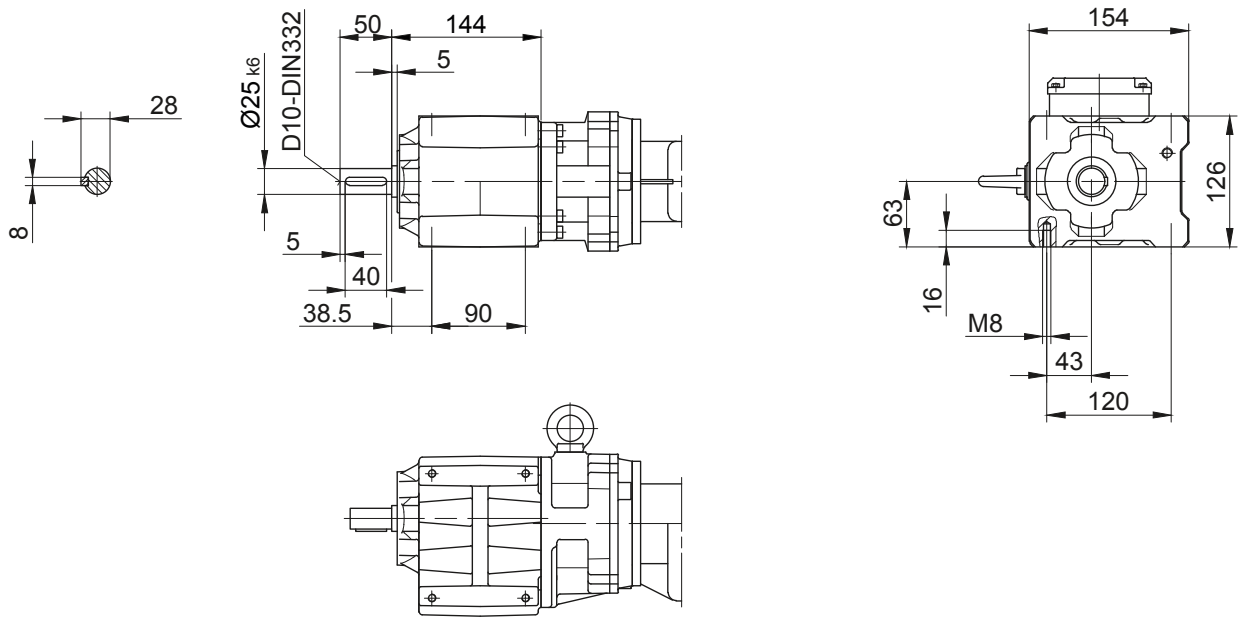

Foot plate left
Code -91L/

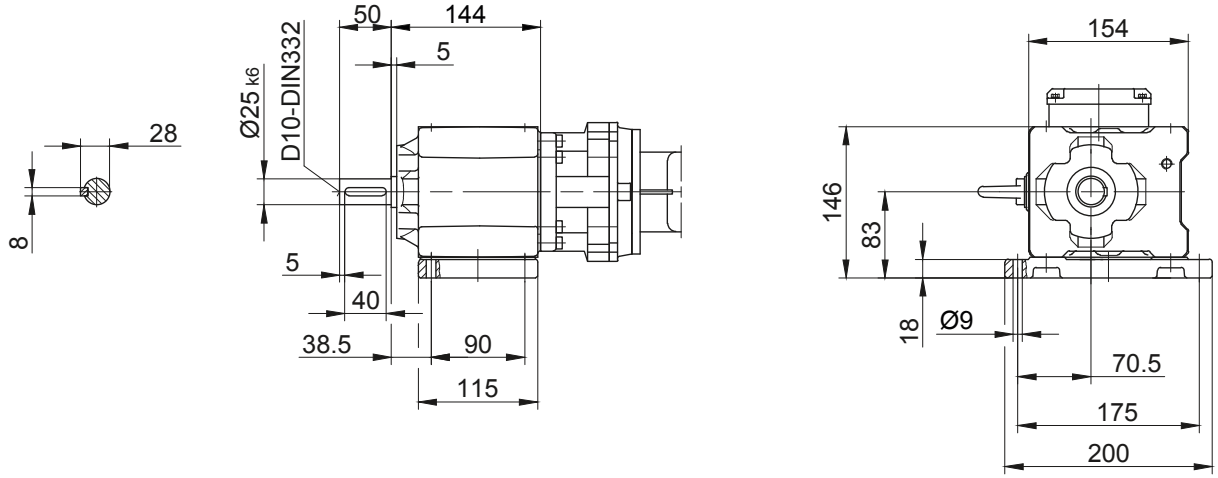

The actual gearbox design can vary from the geometry shown. Generate drive specific 3D and 2D geometries under www.BauerCat.com.

BG-series helical-geared motors

Dimension - Tandem Gearbox

BG20G06

Foot mounting with clearance holes
Code -11/

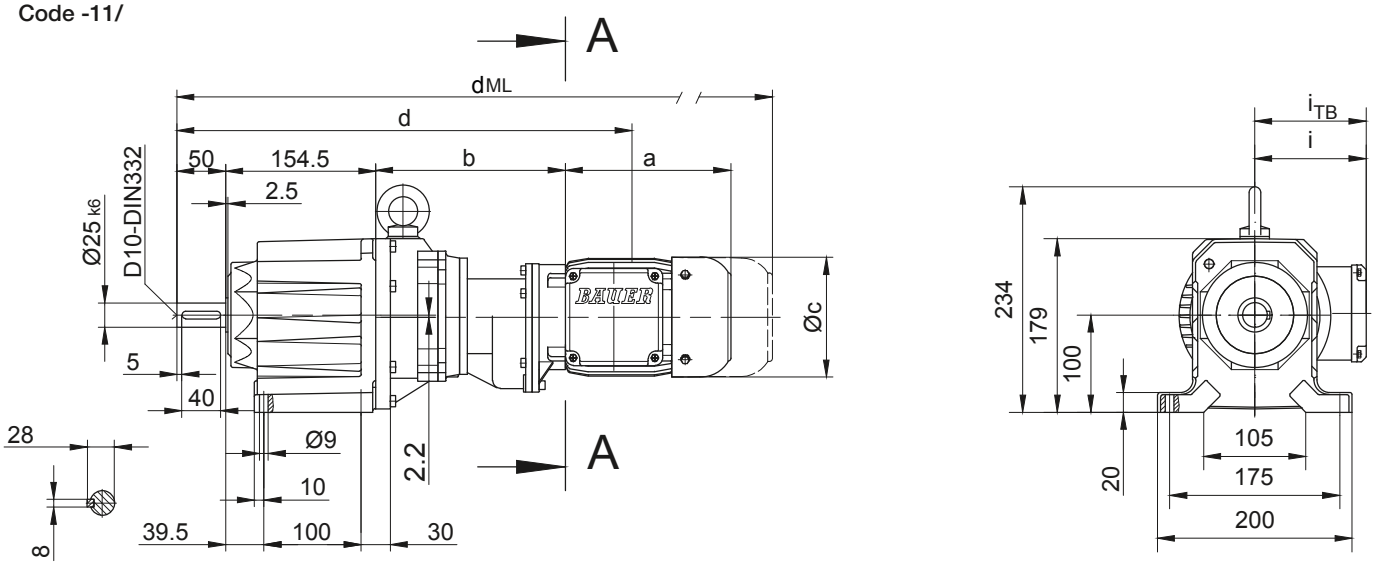

Flange with clearance holes
Code -37/
(Code -47/)

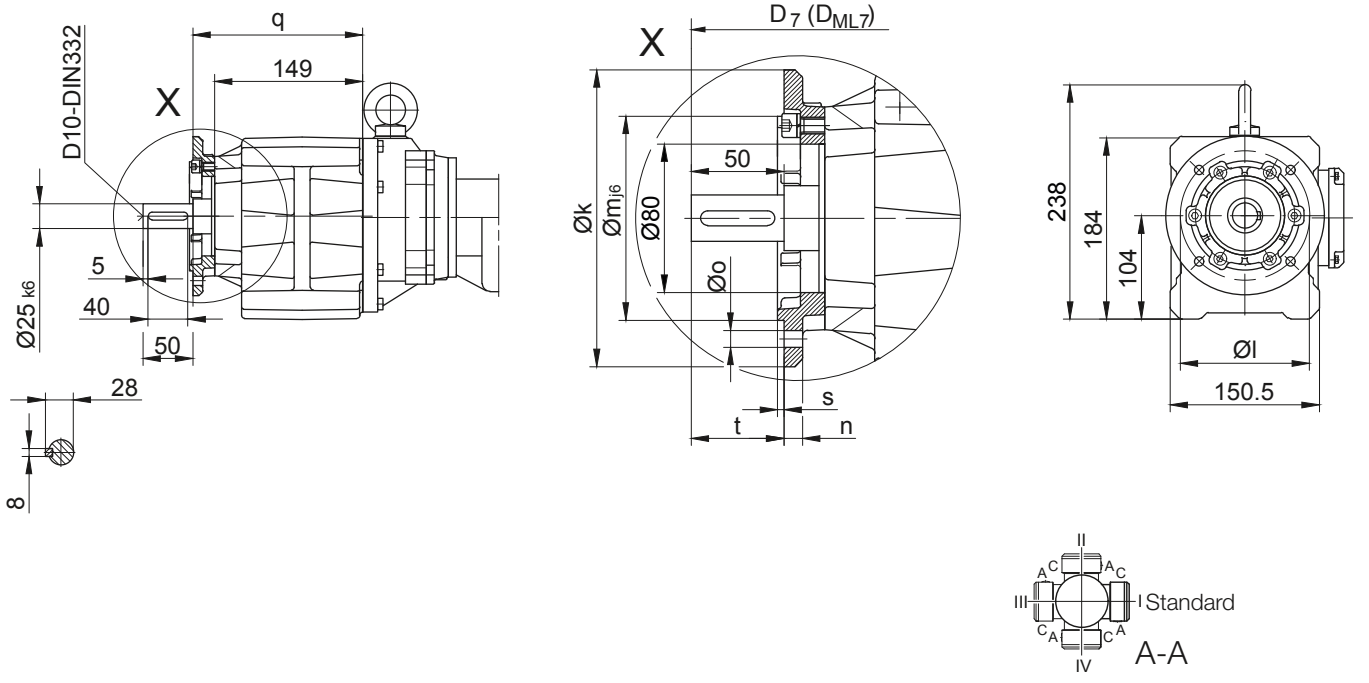

Flange Dimensions											
Type	Design	k	l	m	n	o	q	s	t	D_7	D_{ML7}
BG20..	Code -37V/	160	130	110	10	9	171	3.5	50	d+16.5	d_{ML}+16.5
BG20..	Code -47V/	200	165	130	12	11	178	3.5	43	d+16.5	d_{ML}+16.5
Dimensions in millimetres (mm)											

Type	a	b	c	d	i	Design with motor extensions				
						i_{TB}	Brake	Encoder	Brake with Encoder	Back Stop
							d_{ML}	d_{ML}	d_{ML}	d_{ML}
BG20G06-../D04.A.	142.5	193	110.5	540	90	112	583.5	627.5	671	-
BG20G06-../D..05.A.	170.5	195	123	570	101.5	117	612	672.5	710	-
BG20G06-../D..06.A.	170.5	195	123	570	101.5	119	612	672.5	710	-
BG20G06-../D..07.A.	190.5	195	123	590	101.5	119	632	692.5	730	-
BG20G06-../D..08.A.	199.5	239	156	643	116	136.5	709	755	816.5	709
BG20G06-../D..08.B.	229.5	239	156	673	116	136.5	739	785	846	739
Dimensions in millimetres (mm)										

The actual gearbox design can vary from the geometry shown. Generate drive specific 3D and 2D geometries under www.BauerCat.com.

BG20G06

Flange with clearance holes
Code -71/

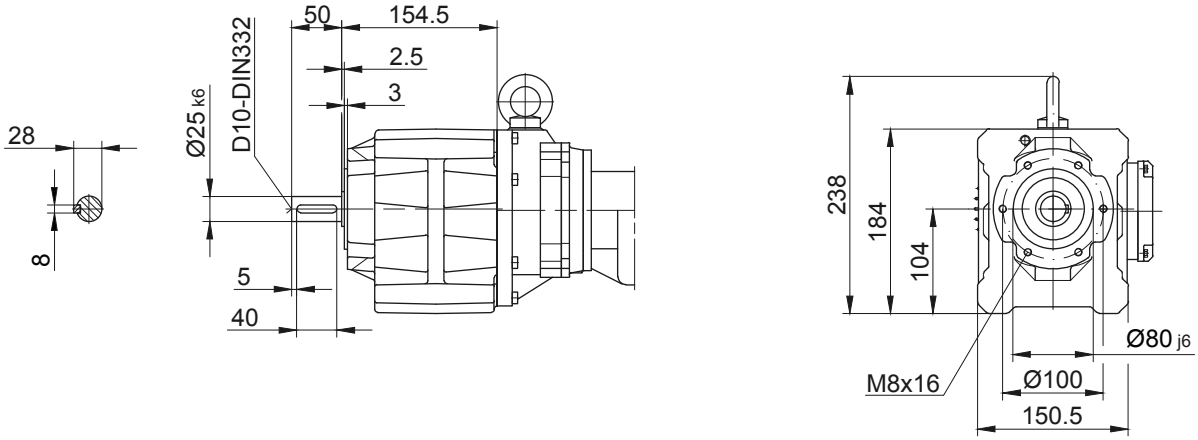

Foot with tapped holes left and right
Code -61LR/

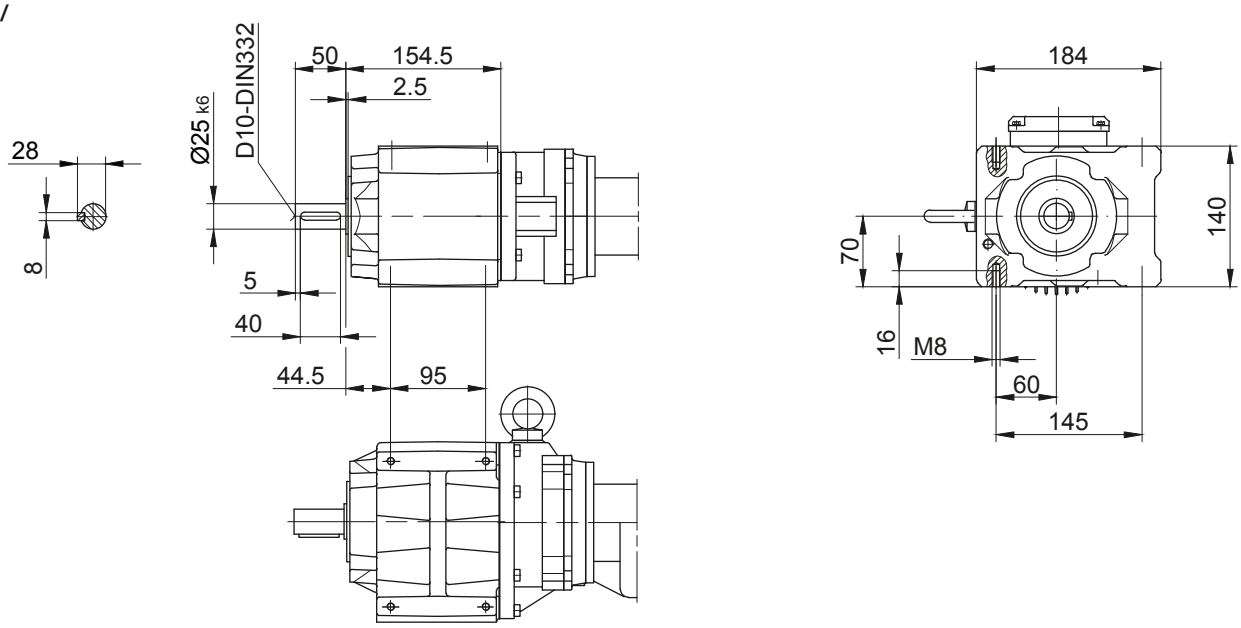

Foot mounting right with clearance holes
Code -01R (-91L)

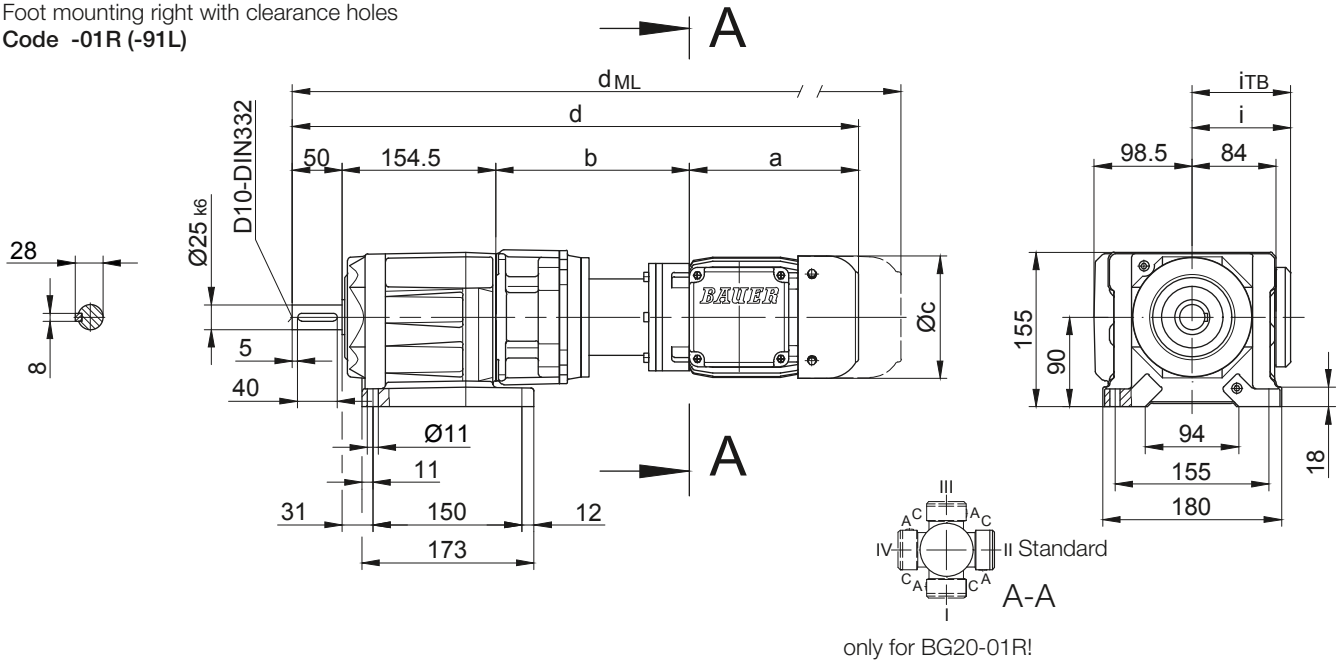

only for BG20-01R!

The actual gearbox design can vary from the geometry shown. Generate drive specific 3D and 2D geometries under www.BauerCat.com.

BG-series helical-geared motors

Dimension - Tandem Gearbox

BG30G06

Foot mounting with clearance holes
Code -11/

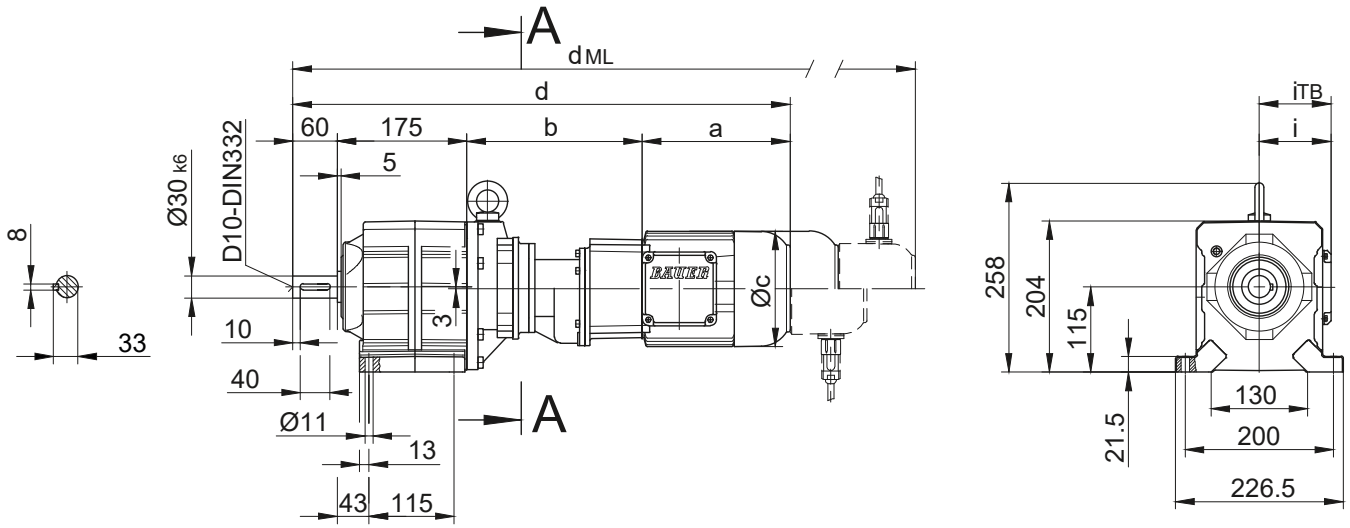

Flange with clearance holes
Code -37/
(Code -27/)

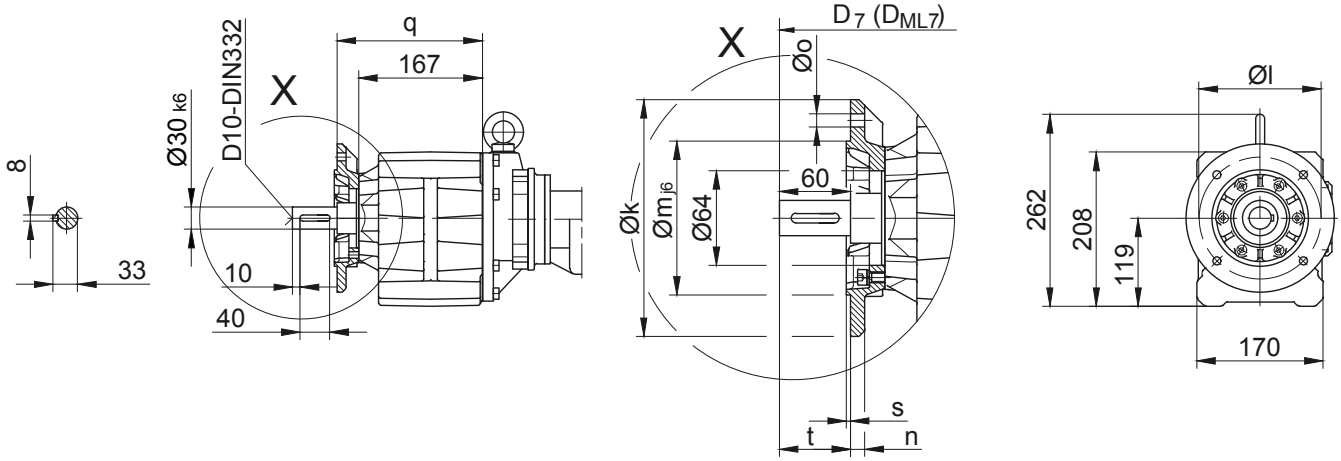

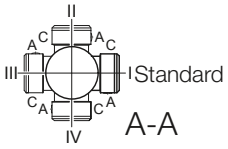

Flange Dimensions											
Type	Design	k	l	m	n	o	q	s	t	D_7	D_{ML7}
BG30..	Code -37/	200	165	130	12	11	196	3.5	60	d+21	d_{ML}+21
BG30..	Code -27/	160	130	110	10	9	189	3.5	67	d+21	d_{ML}+21
Dimensions in millimetres (mm)											

Type	a	b	c	d	i	Design with motor extensions				
						i_{TB}	Brake	Encoder	Brake with Encoder	Back Stop
							d_{ML}	d_{ML}	d_{ML}	d_{ML}
BG30G06-../D04.A.	142.5	191	110.5	568.5	90	112	612	656	699.5	-
BG30G06-../D..05.A.	170.5	193	123	598.5	101.5	117	640.5	701	738.5	-
BG30G06-../D..06.A.	170.5	193	123	598.5	101.5	119	640.5	701	738.5	-
BG30G06-../D..07.A.	190.5	193	123	618.5	101.5	119	660.5	721	758.5	-
BG30G06-../D..08.A.	199.5	237	156	671.5	116	136.5	737.5	783.5	845	737.5
BG30G06-../D..08.B.	229.5	237	156	701.5	116	136.5	767.5	813.5	874.5	767.5
Dimensions in millimetres (mm)										

The actual gearbox design can vary from the geometry shown. Generate drive specific 3D and 2D geometries under www.BauerCat.com.

BG30G06

Flange with clearance holes
Code -71/

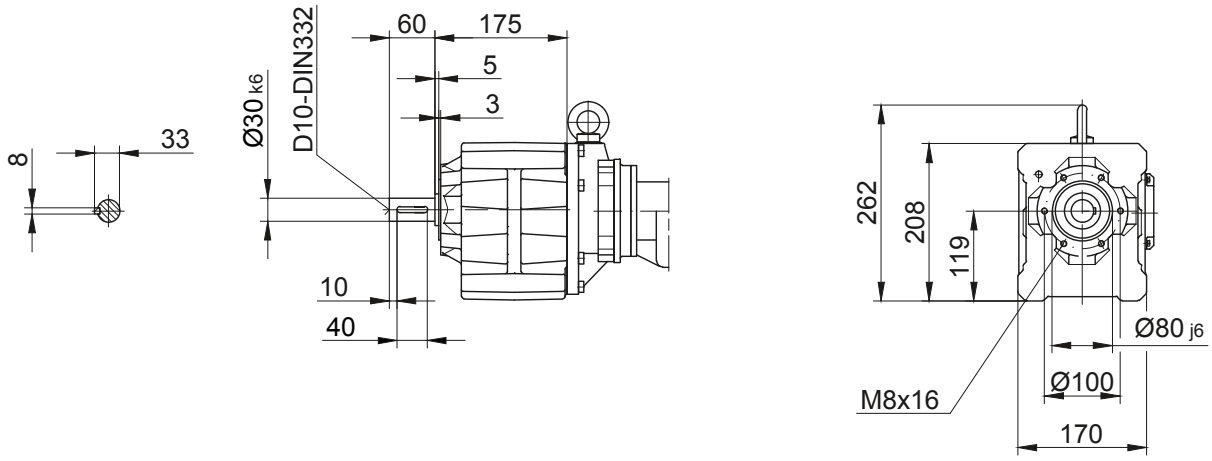

Foot with tapped holes left and right
Code -61LR/

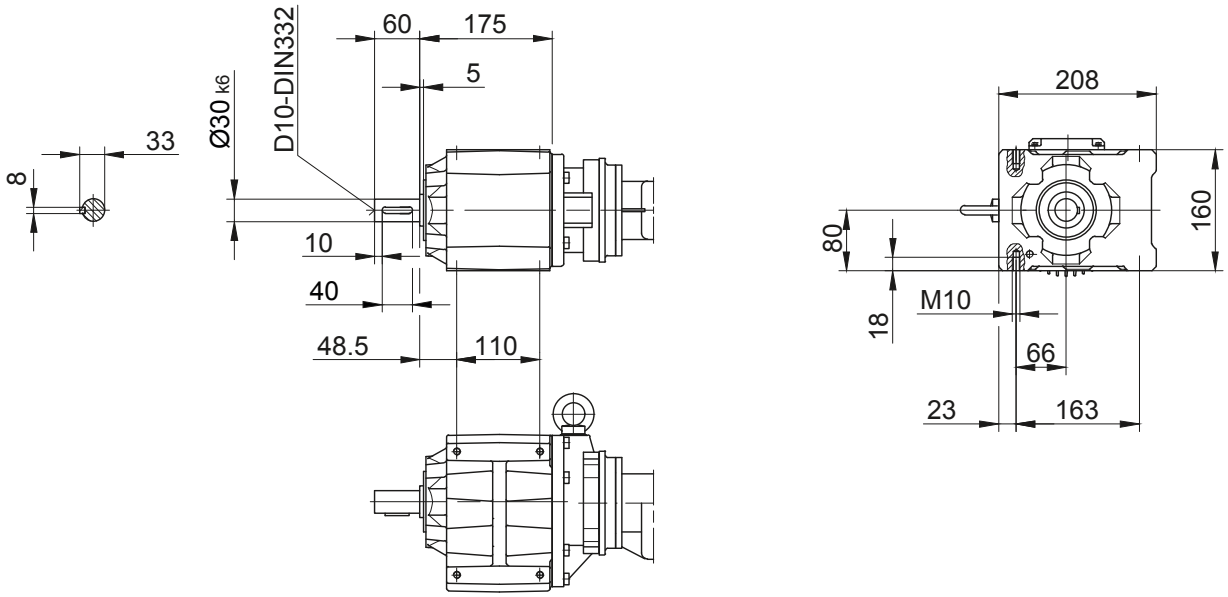

Foot plate left
Code -91L/

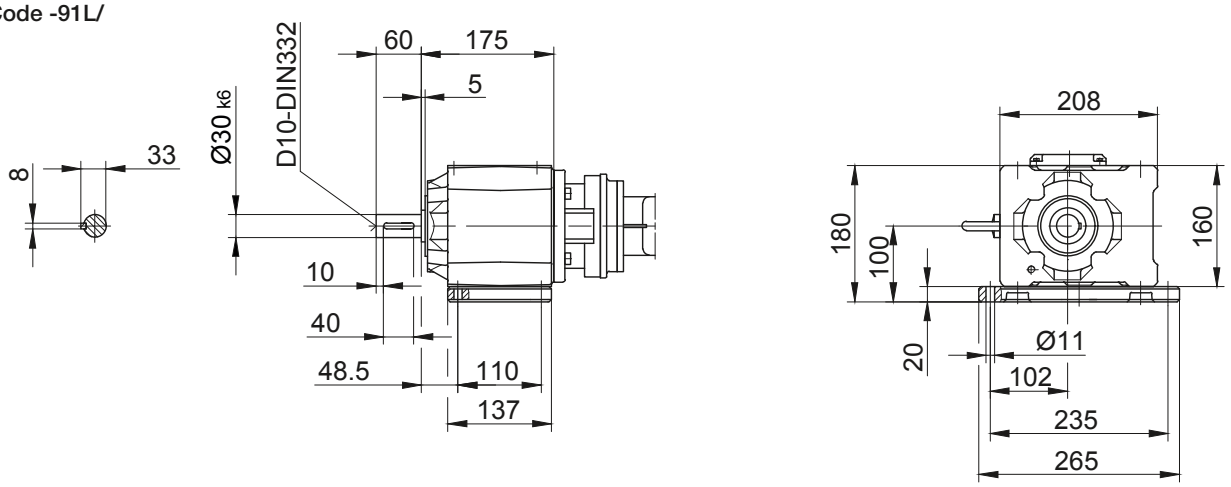

10

BG-series helical-geared motors

Dimension - Tandem Gearbox

BG40G10

Foot mounting with clearance holes
Code -11/

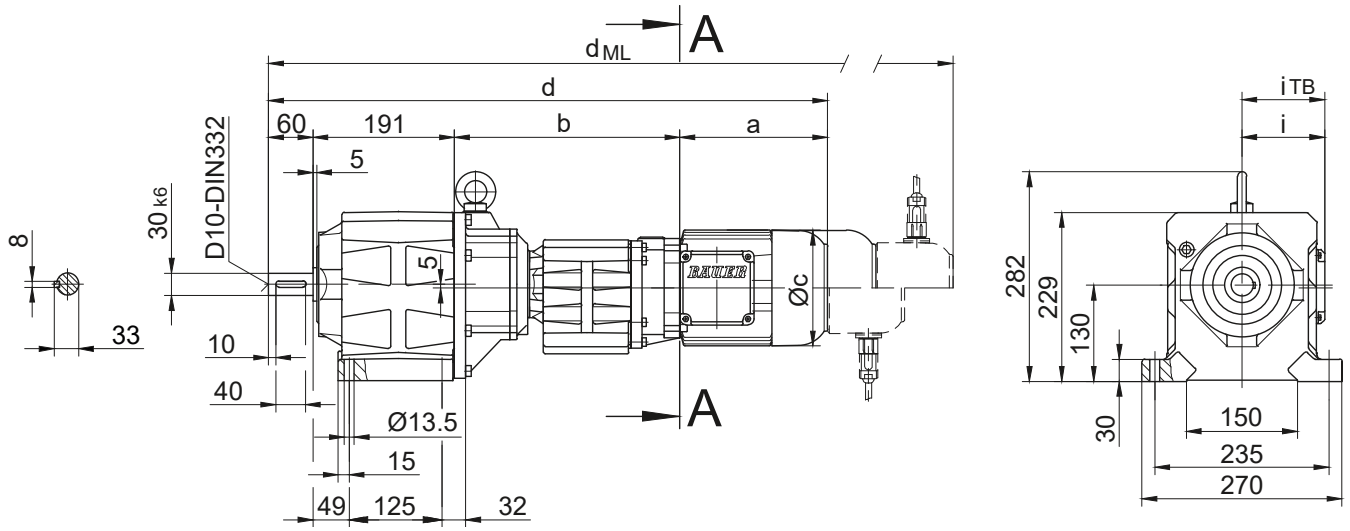

Flange with clearance holes
Code -37/
(Code -47/)

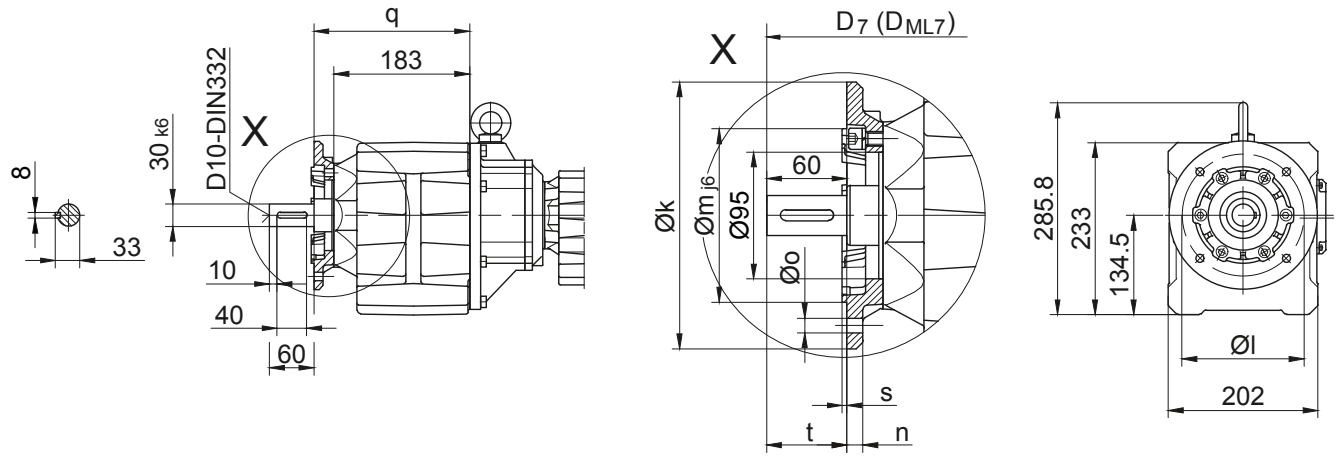

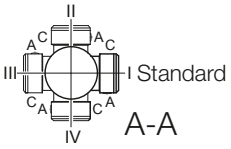

Flange Dimensions											
Type	Design	k	l	m	n	o	q	s	t	D_7	D_{ML7}
BG40..	Code -37/	200	165	130	12	11	210	3.5	60	d+19	d_{ML}+19
BG40..	Code -47/	250	215	180	16	13.5	219	4	51	d+19	d_{ML}+19
Dimensions in millimetres (mm)											

Type	a	b	c	d	i	Design with motor extensions				
						i_{TB}	Brake	Encoder	Brake with Encoder	Back Stop
							d_{ML}	d_{ML}	d_{ML}	d_{ML}
BG40G10-../D..05.A.	170.5	300	123	721.5	101.5	117	763.5	824	861.5	-
BG40G10-../D..06.A.	170.5	300	123	721.5	101.5	119	763.5	824	861.5	-
BG40G10-../D..07.A.	190.5	300	123	741.5	101.5	119	783.5	844	881.5	-
BG40G10-../D..08.A.	199.5	304	156	754.5	116	136.5	820.5	866.5	928	820.5
BG40G10-../D..08.B.	229.5	304	156	784.5	116	136.5	850.5	896.5	957.5	850.5
BG40G10-../D..09.A.	250.5	318.5	176	820	125.5	157	913	927.5	1017	913
BG40G10-../D..09.B.	308.5	318.5	176	878	125.5	157	971	985	1075	971
Dimensions in millimetres (mm)										

The actual gearbox design can vary from the geometry shown. Generate drive specific 3D and 2D geometries under www.BauerCat.com.

BG40G10

Flange with clearance holes
Code -71/

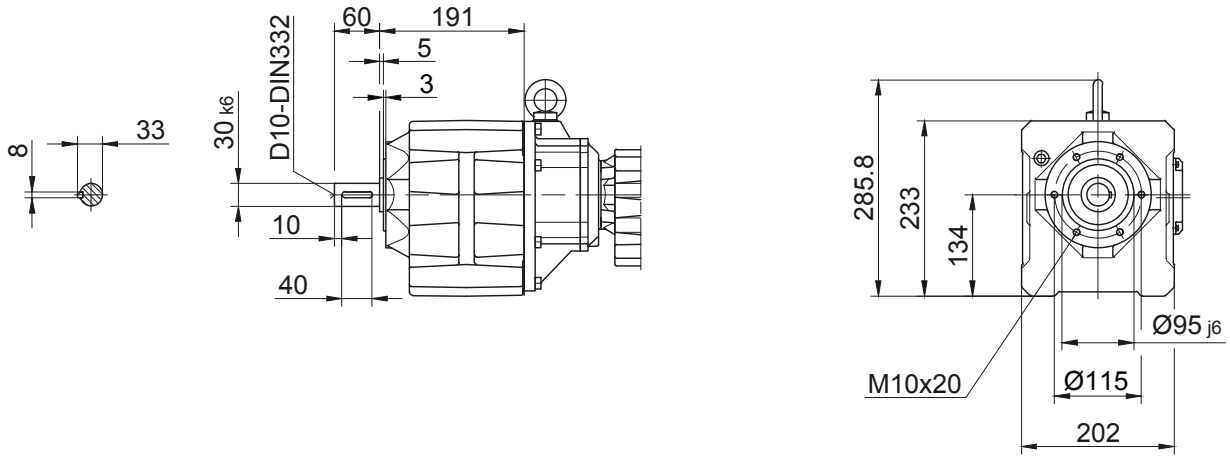

Foot with tapped holes left and right
Code -61LR/

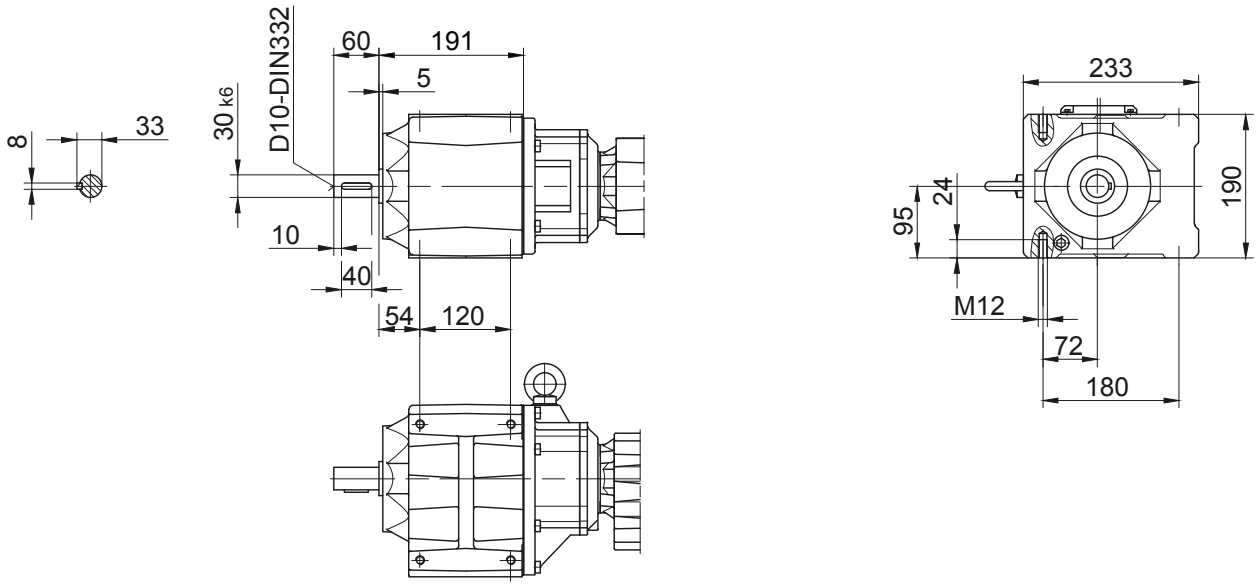

Foot plate left
Code -91L/

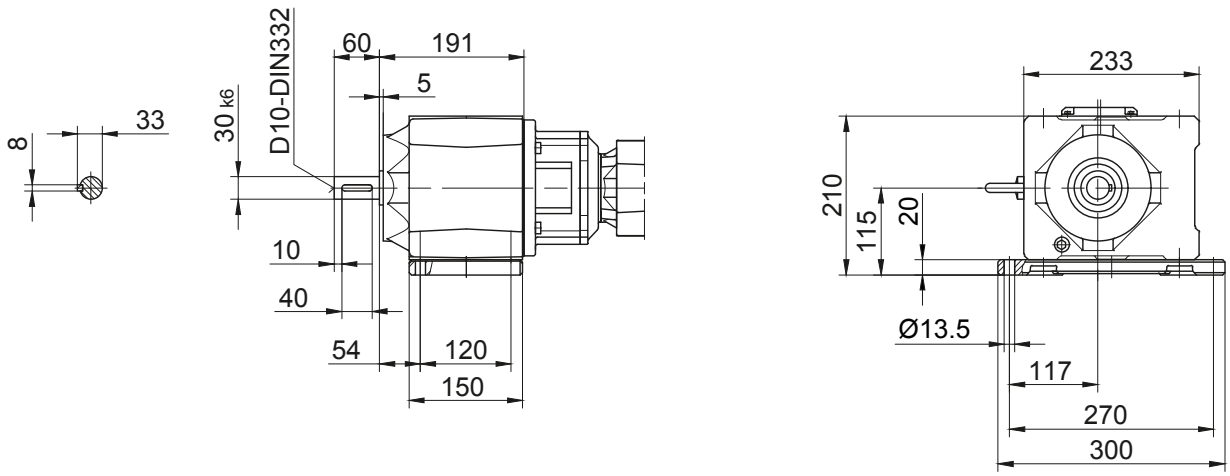

BG-series helical-geared motors

Dimension - Tandem Gearbox

BG50G10

Foot mounting with clearance holes
Code -11/

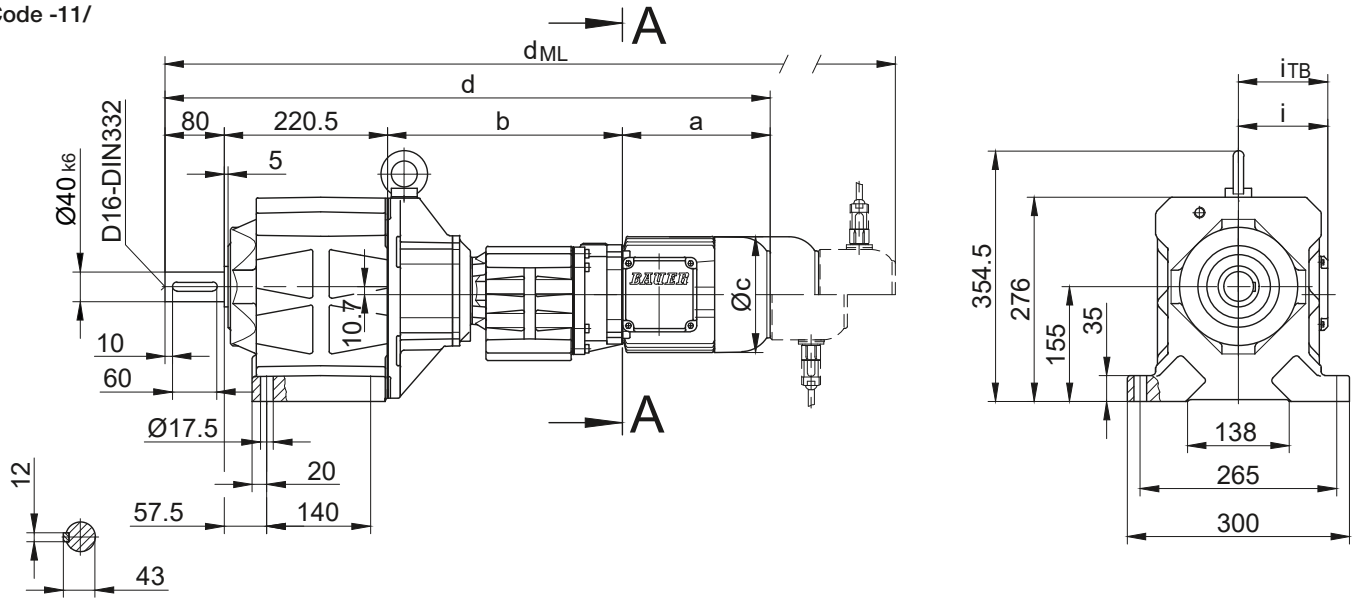

Flange with clearance holes
Code -37/
(Code -27/)

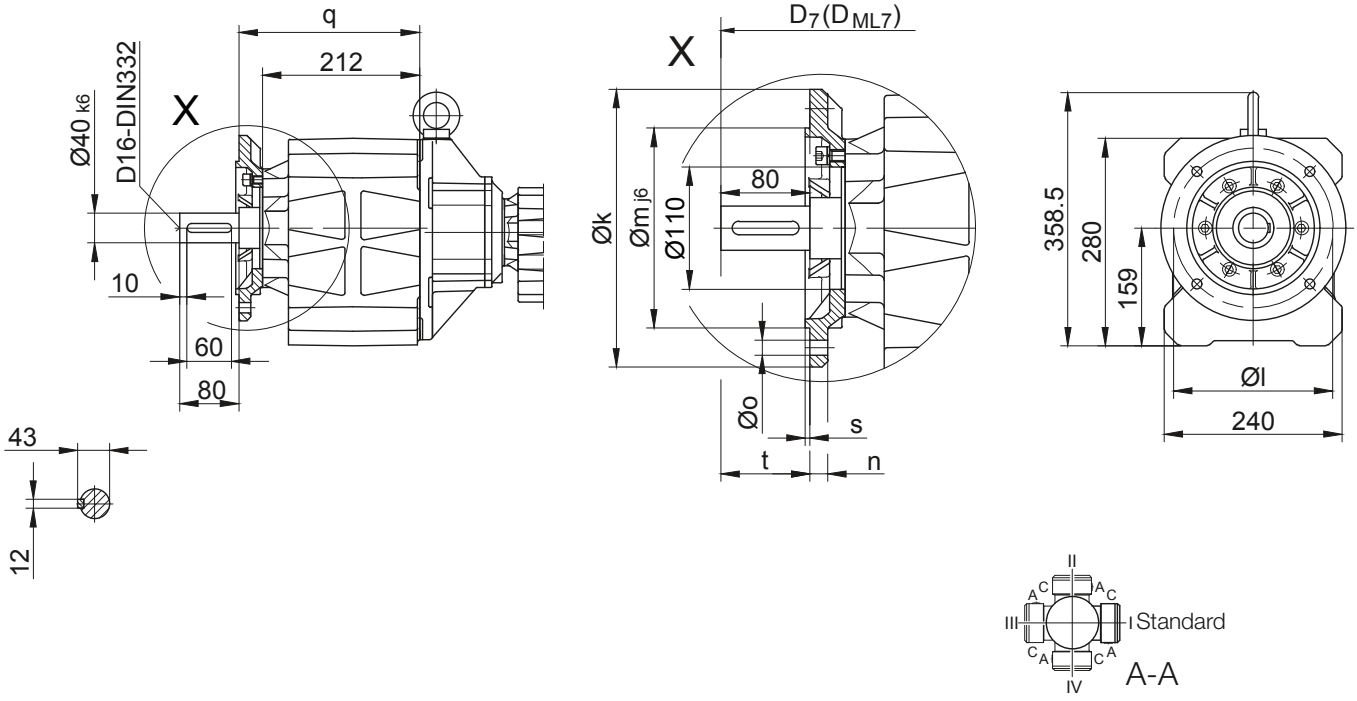

Flange Dimensions											
Type	Design	k	l	m	n	o	q	s	t	D_7	D_{ML7}
BG50..	Code -37/	250	215	180	16	13.5	244	4	80	d+23.5	d_{ML}+23.5
BG50..	Code -27/	200	165	130	12	11	241	3.5	83	d+23.5	d_{ML}+23.5
Dimensions in millimetres (mm)											

Type	a	b	c	d	i	Design with motor extensions				
						i_{TB}	Brake	Encoder	Brake with Encoder	Back Stop
							d_{ML}	d_{ML}	d_{ML}	d_{ML}
BG50G10-../D..05.A.	170.5	313	123	784	101.5	117	826	886.5	924	-
BG50G10-../D..06.A.	170.5	313	123	784	101.5	119	826	886.5	924	-
BG50G10-../D..07.A.	190.5	313	123	804	101.5	119	846	906.5	944	-
BG50G10-../D..08.A.	199.5	317	156	817	116	136.5	883	929	990.5	883
BG50G10-../D..08.B.	229.5	317	156	847	116	136.5	913	959	1020	913
BG50G10-../D..09.A.	250.5	331.5	176	882.5	125.5	157	975.5	990	1079.5	975.5
BG50G10-../D..09.B.	308.5	331.5	176	940.5	125.5	157	1033.5	1047.5	1137.5	1033.5
Dimensions in millimetres (mm)										

The actual gearbox design can vary from the geometry shown. Generate drive specific 3D and 2D geometries under www.BauerCat.com.

BG50G10

Flange with clearance holes
Code -71/

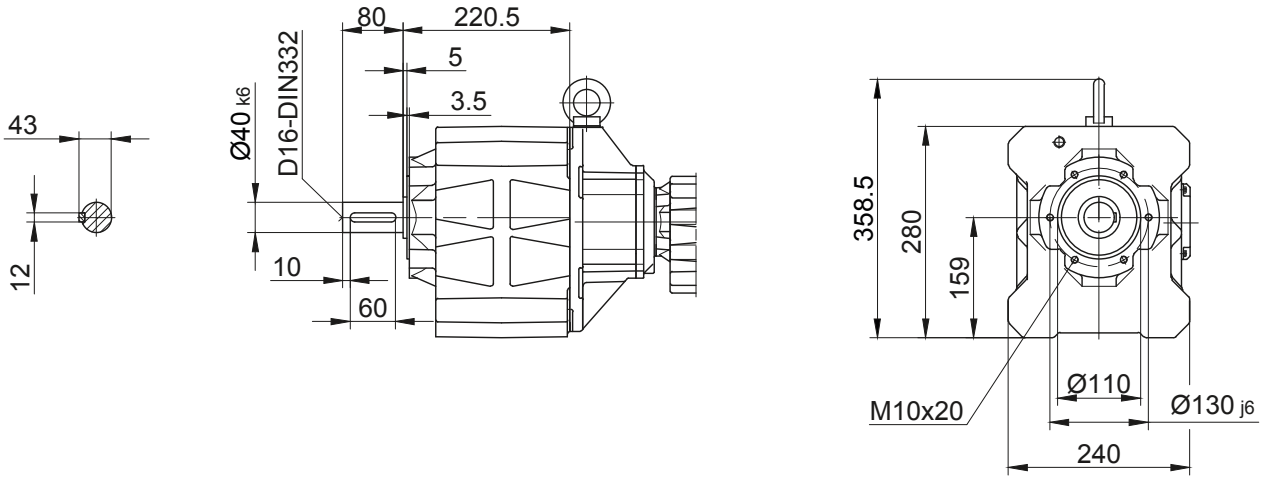

Foot with tapped holes left and right
Code -61LR/

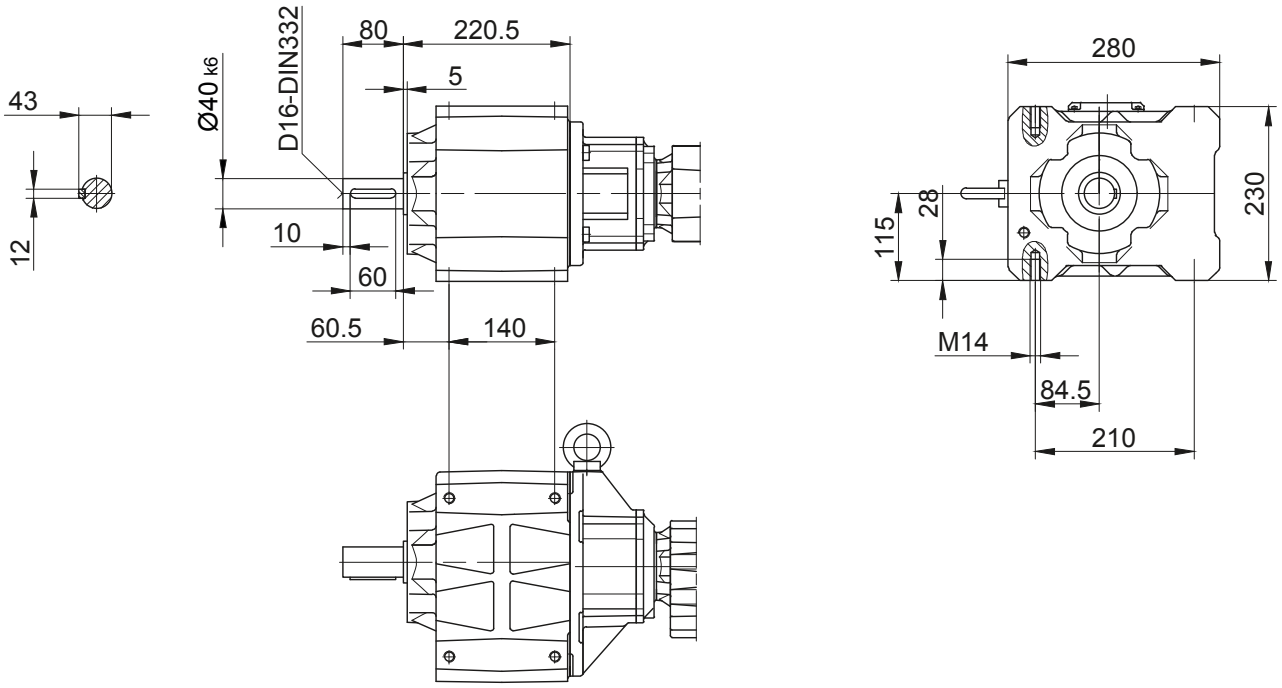

BG-series helical-geared motors

Dimension - Tandem Gearbox

BG60G20

Foot mounting with clearance holes
Code -11/

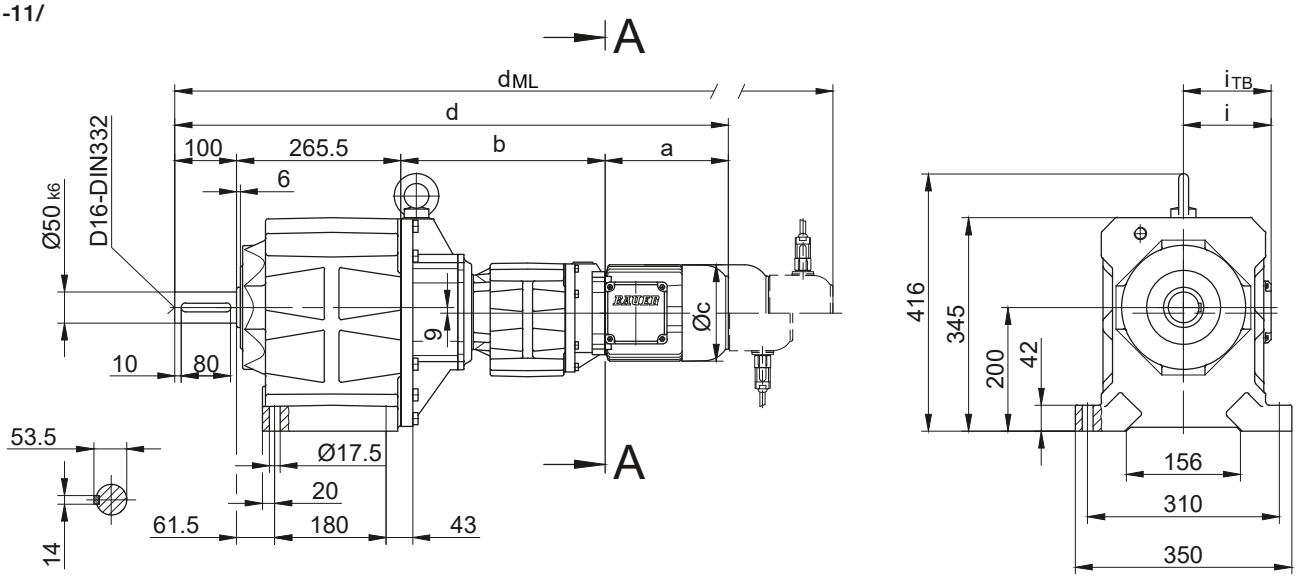

Flange with clearance holes
Code -37/
(Code -27/)

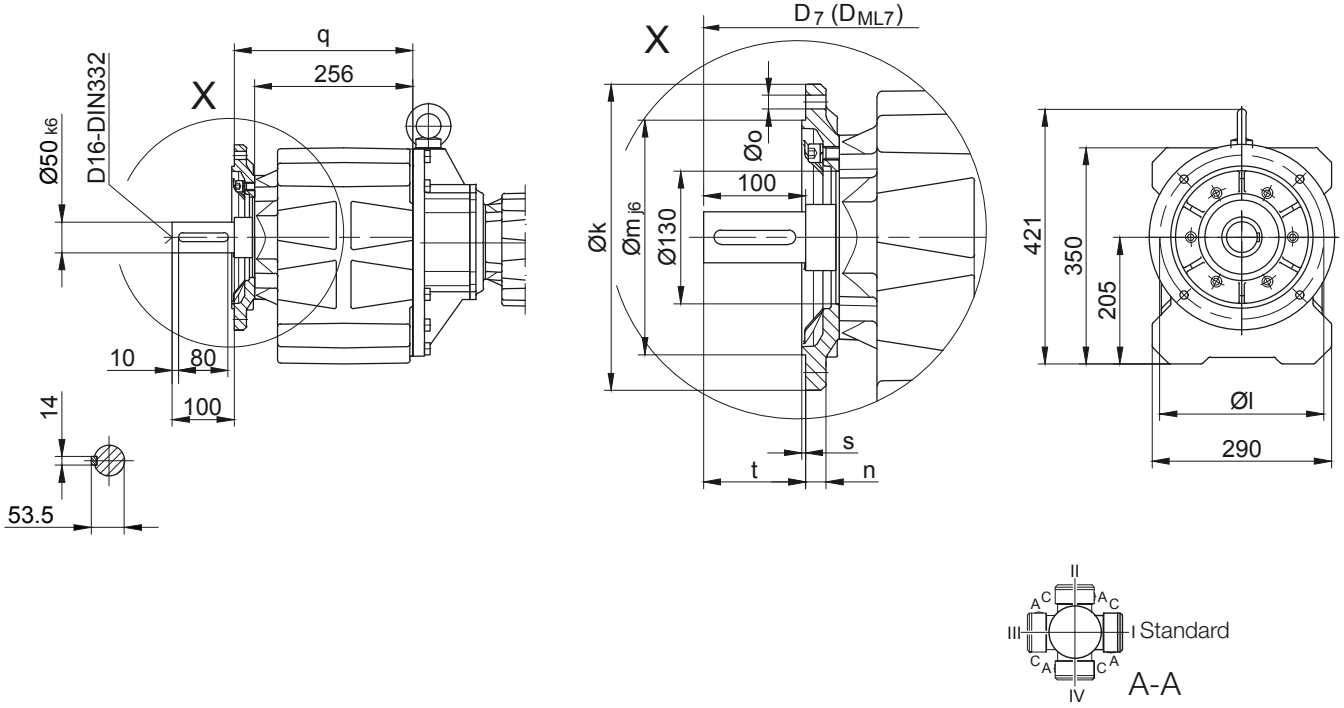

Flange Dimensions											
Type	Design	k	l	m	n	o	q	s	t	D_7	D_{ML7}
BG60..	Code -37/	300	265	230	20	13.5	289	4	100	d+23.5	d_{ML}+23.5
BG60..	Code -27/	250	215	180	16	13.5	286	4	103	d+23.5	d_{ML}+23.5
Dimensions in millimetres (mm)											

Type	a	b	c	d	i	Design with motor extensions				
						i_{TB}	Brake	Encoder	Brake with Encoder	Back Stop
							d_{ML}	d_{ML}	d_{ML}	d_{ML}
BG60G20-../D..05.A.	170.5	326	123	862	101.5	117	904	964.5	1002	-
BG60G20-../D..06.A.	170.5	326	123	862	101.5	119	904	964.5	1002	-
BG60G20-../D..07.A.	190.5	326	123	882	101.5	119	924	984.5	1022	-
BG60G20-../D..08.A.	199.5	330	156	895	116	136.5	961	1007	1068.5	961
BG60G20-../D..08.B.	229.5	330	156	925	116	136.5	991	1037	1098	991
BG60G20-../D..09.A.	250.5	344.5	176	960.5	125.5	157	1053.5	1068	1157.5	1053.5
BG60G20-../D..09.B.	308.5	344.5	176	1018.5	125.5	157	1111.5	1125.5	1215.5	1111.5
Dimensions in millimetres (mm)										

The actual gearbox design can vary from the geometry shown. Generate drive specific 3D and 2D geometries under www.BauerCat.com.

BG60G20

Flange with clearance holes
Code -71/

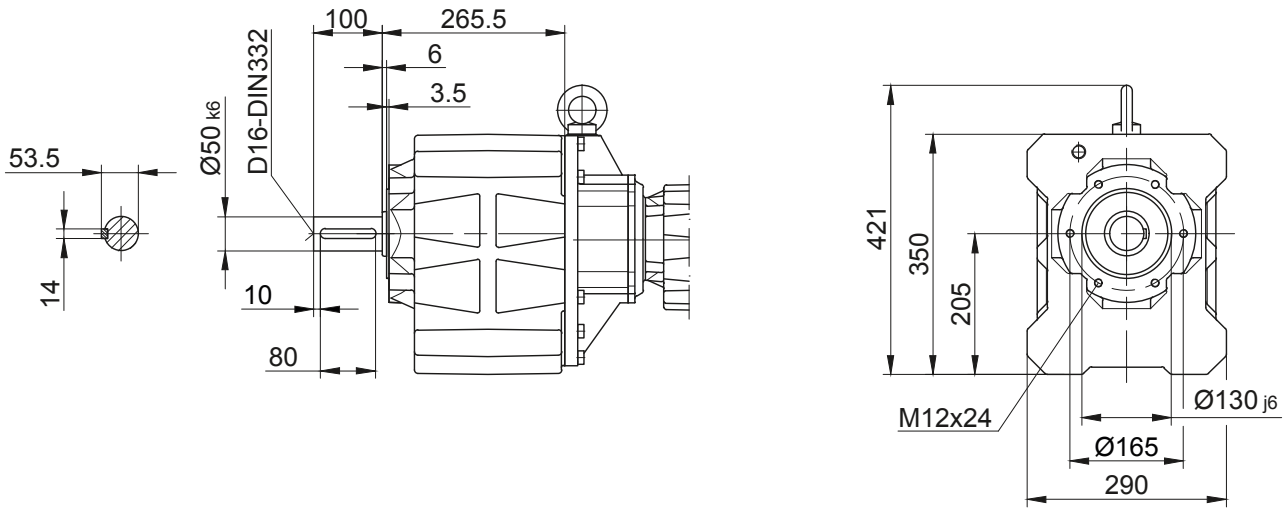

Foot with tapped holes left and right
Code -61LR/

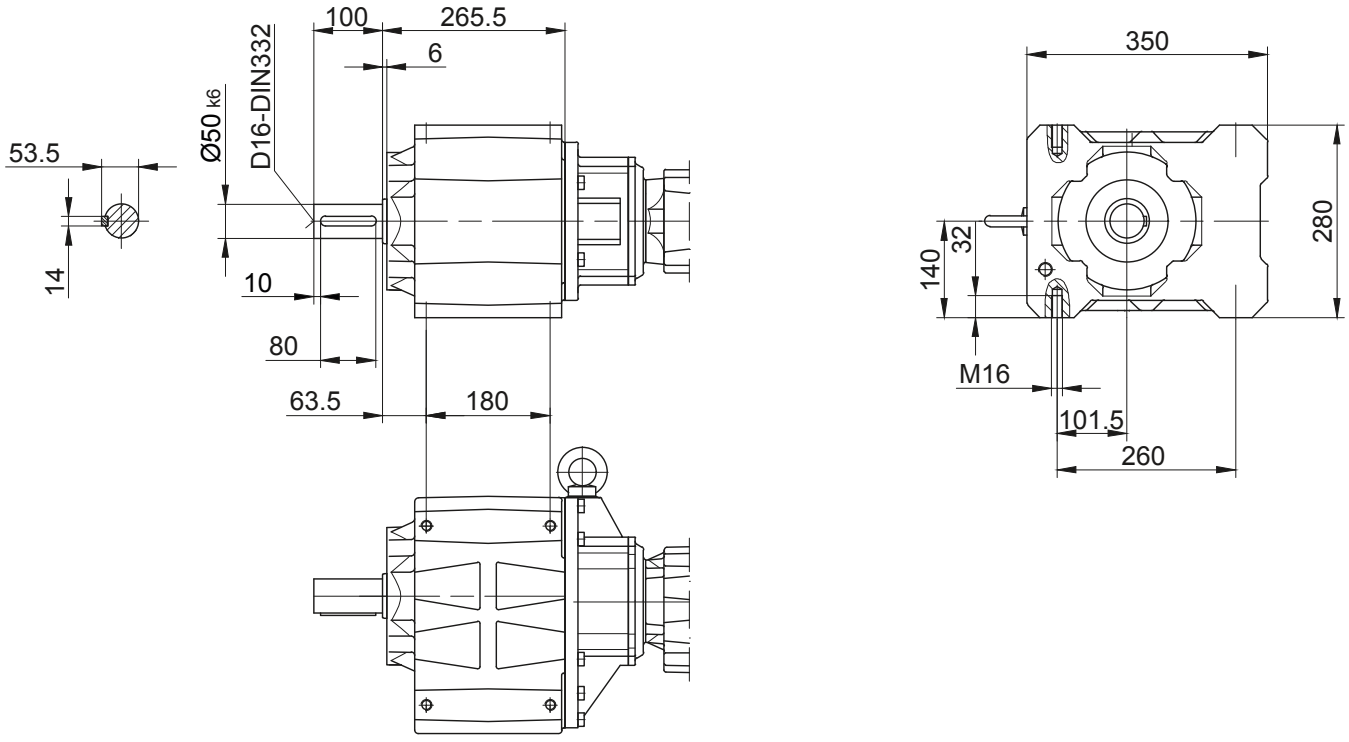

BG-series helical-geared motors

Dimension - Tandem Gearbox

BG70G20

Foot mounting with clearance holes
Code -11/

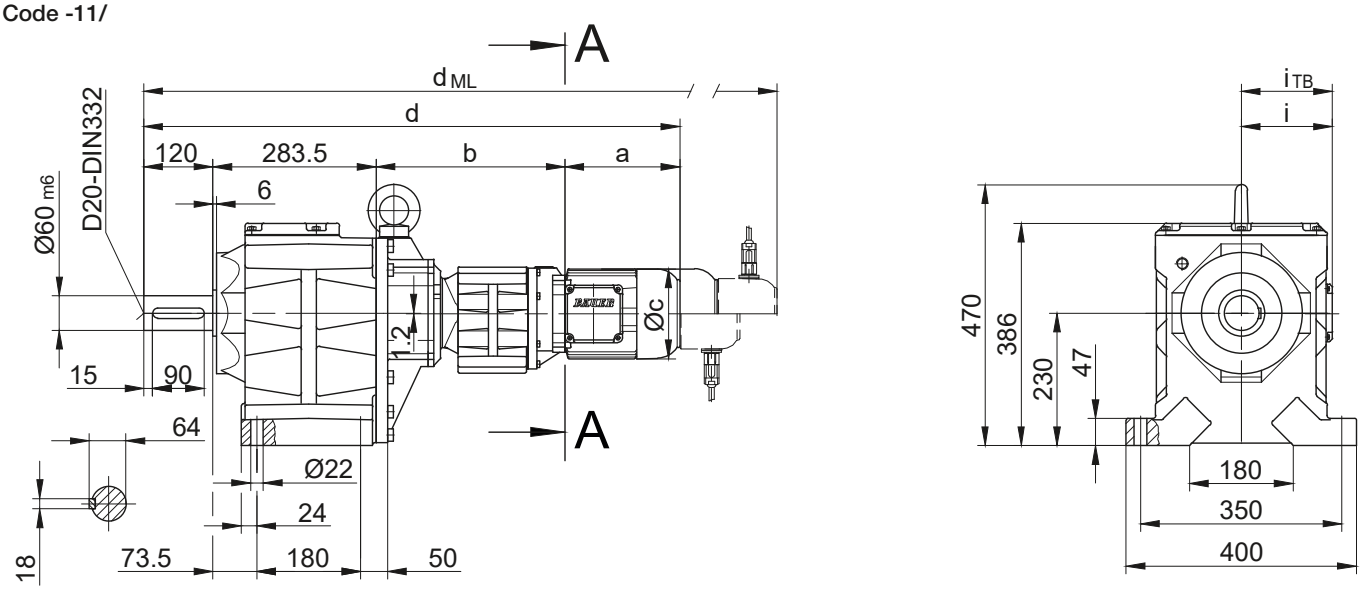

Flange with clearance holes
Code -37/
(Code -27/)

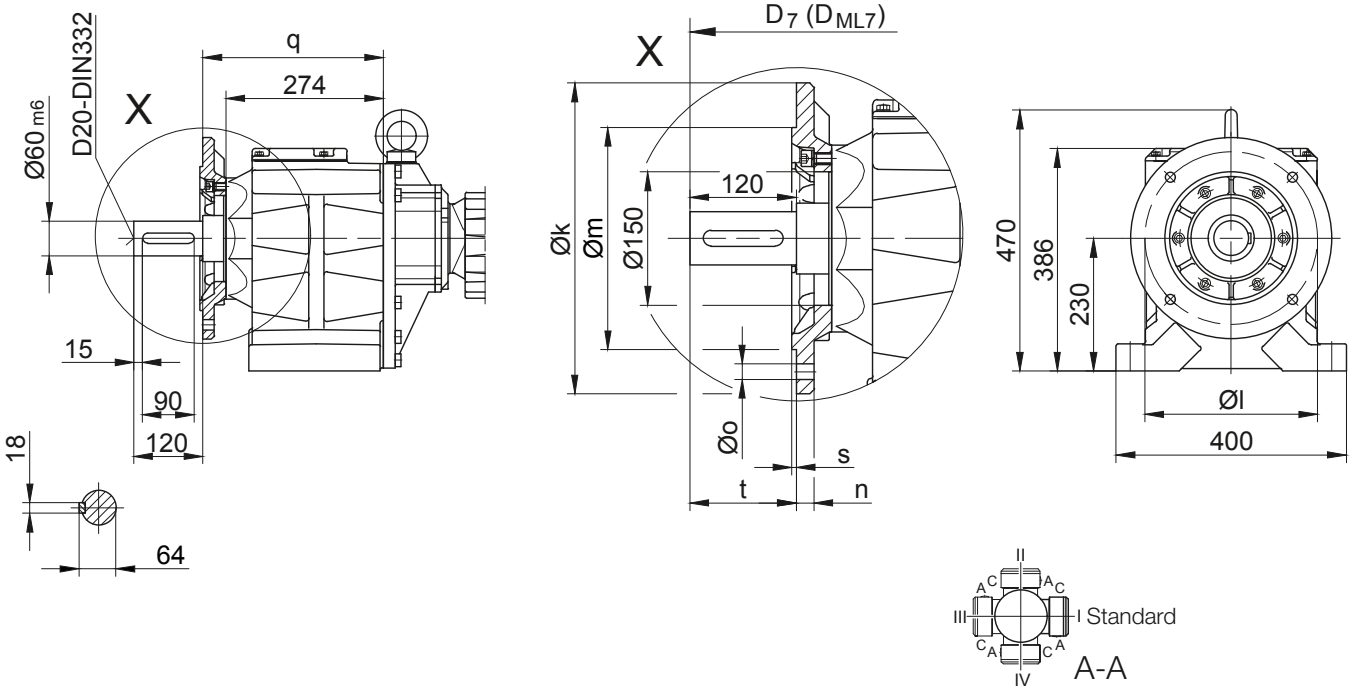

Flange Dimensions											
Type	Design	k	l	m	n	o	q	s	t	D_7	D_{ML7}
BG70..	Code -37/	350	300	250	20	17.5	314	5	120	d+30.5	d_{ML}+30.5
BG70..	Code -27/	300	265	230	20	13.5	322	4	112	d+30.5	d_{ML}+30.5
Dimensions in millimetres (mm)											

Type	a	b	c	d	i	Design with motor extensions				
						i_{TB}	Brake	Encoder	Brake with Encoder	Back Stop
							d_{ML}	d_{ML}	d_{ML}	d_{ML}
BG70G20-../D..05.A.	170.5	324	123	898	101.5	117	940	1000.5	1038	-
BG70G20-../D..06.A.	170.5	324	123	898	101.5	119	940	1000.5	1038	-
BG70G20-../D..07.A.	190.5	324	123	918	101.5	119	960	1020.5	1058	-
BG70G20-../D..08.A.	199.5	328	156	931	116	136.5	997	1043	1104.5	997
BG70G20-../D..08.B.	229.5	328	156	961	116	136.5	1027	1073	1134	1027
BG70G20-../D..09.A.	250.5	342.5	176	996.5	125.5	157	1089.5	1104	1193.5	1089.5
BG70G20-../D..09.B.	308.5	342.5	176	1054.5	125.5	157	1147.5	1161.5	1251.5	1147.5
Dimensions in millimetres (mm)										

The actual gearbox design can vary from the geometry shown. Generate drive specific 3D and 2D geometries under www.BauerCat.com.

BG70G20

Flange with clearance holes

Code -71/

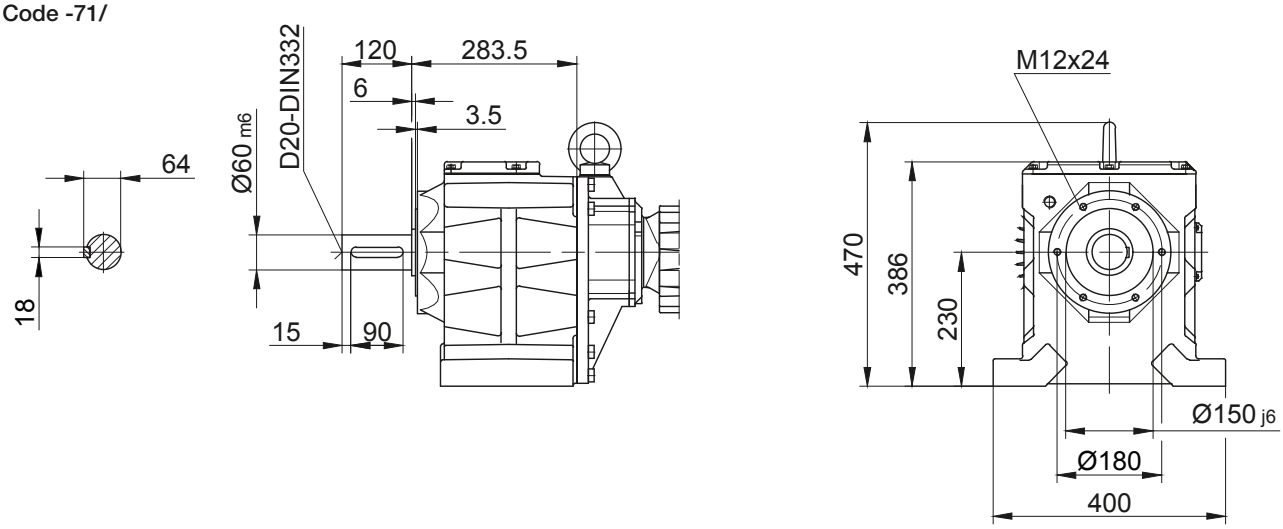

The actual gearbox design can vary from the geometry shown. Generate drive specific 3D and 2D geometries under www.BauerCat.com.

BG-series helical-geared motors

Dimension - Tandem Gearbox

BG80G40

Foot mounting with clearance holes

Code -11/

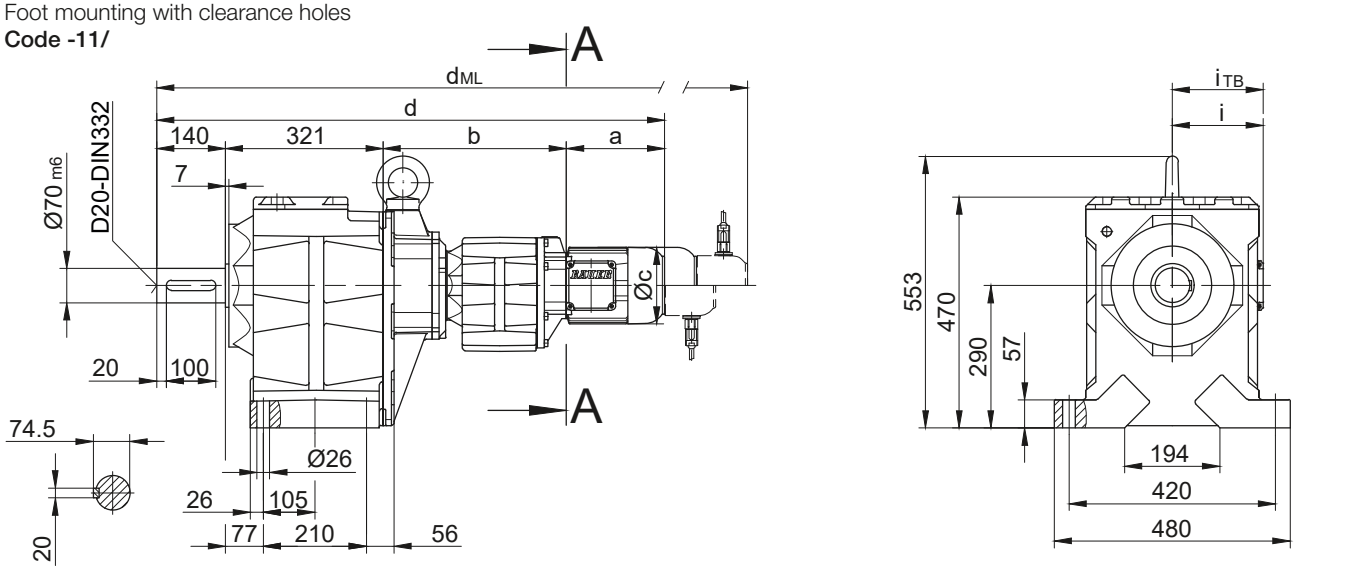

Flange with clearance holes

Code -37/

(Code -27/)

(Code -47/)

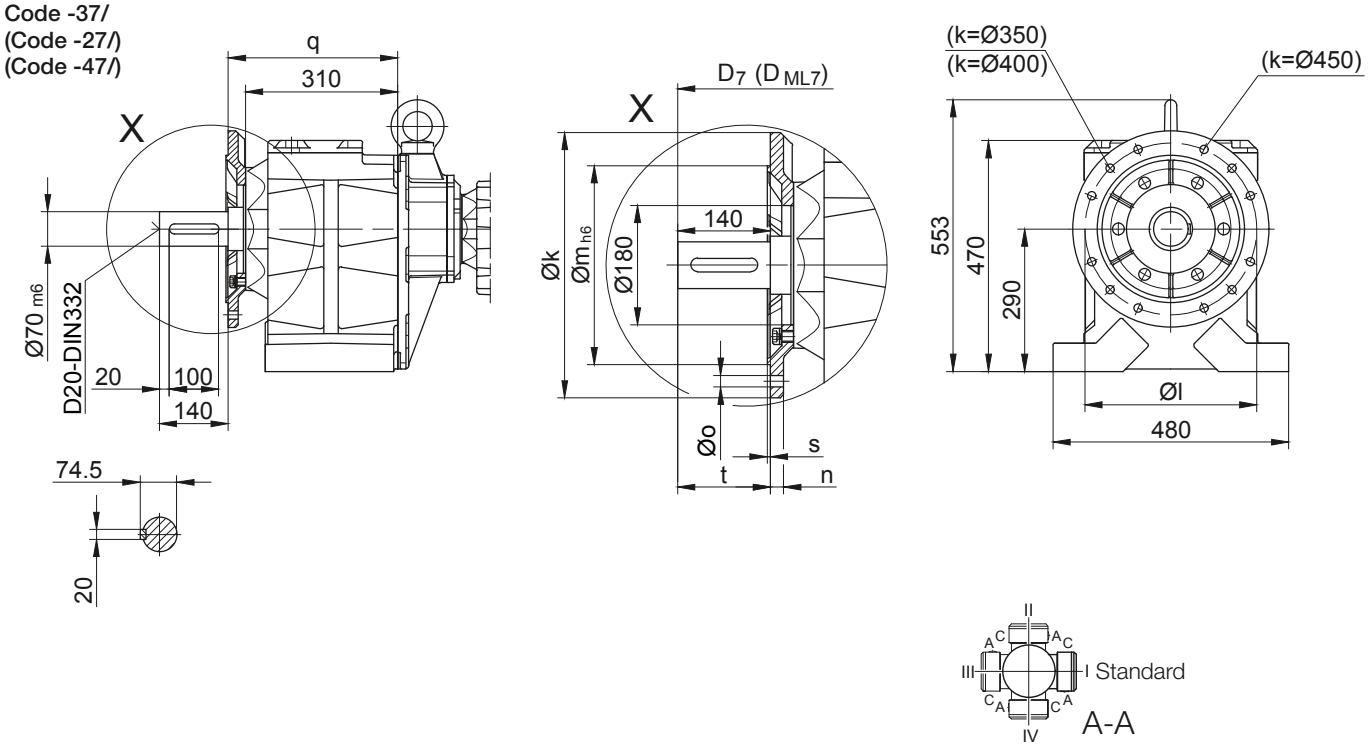

Flange Dimensions											
Type	Design	k	l	m	n	o	q	s	t	D_7	D_{ML7}
BG80..	Code -37/	400	350	300	20	4 x 17.5	345	5	140	d+24	d_{ML}+24
BG80..	Code -27/	350	300	250	20	4 x 17.5	345	5	140	d+24	d_{ML}+24
BG80..	Code -47/	450	400	350	22	8 x 17.5	355	5	130	d+24	d_{ML}+24
Dimensions in millimetres (mm)											

Type	a	b	c	d	i	Design with motor extensions				
						i_{TB}	Brake	Encoder	Brake with Encoder	Back Stop
							d_{ML}	d_{ML}	d_{ML}	d_{ML}
BG80G40-../D..08.A.	199.5	373	156	1033.5	116	136.5	1099.5	1145.5	1207	1099.5
BG80G40-../D..08.B.	229.5	373	156	1063.5	116	136.5	1129.5	1175.5	1236.5	1129.5
BG80G40-../D..09.A.	250.5	387.5	176	1099	125.5	157	1192	1206.5	1296	1192
BG80G40-../D..09.B.	308.5	387.5	176	1157	125.5	157	1250	1264	1354	1250
BG80G40-../D..11.A.	319	394	218	1174	165	176	1272	1281.5	1374	1272
BG80G40-../D..11.B.	387	394	218	1242	165	176	1338	1349.5	1442	1338
Dimensions in millimetres (mm)										

The actual gearbox design can vary from the geometry shown. Generate drive specific 3D and 2D geometries under www.BauerCat.com.

BG80G40

Flange with clearance holes

Code -71/

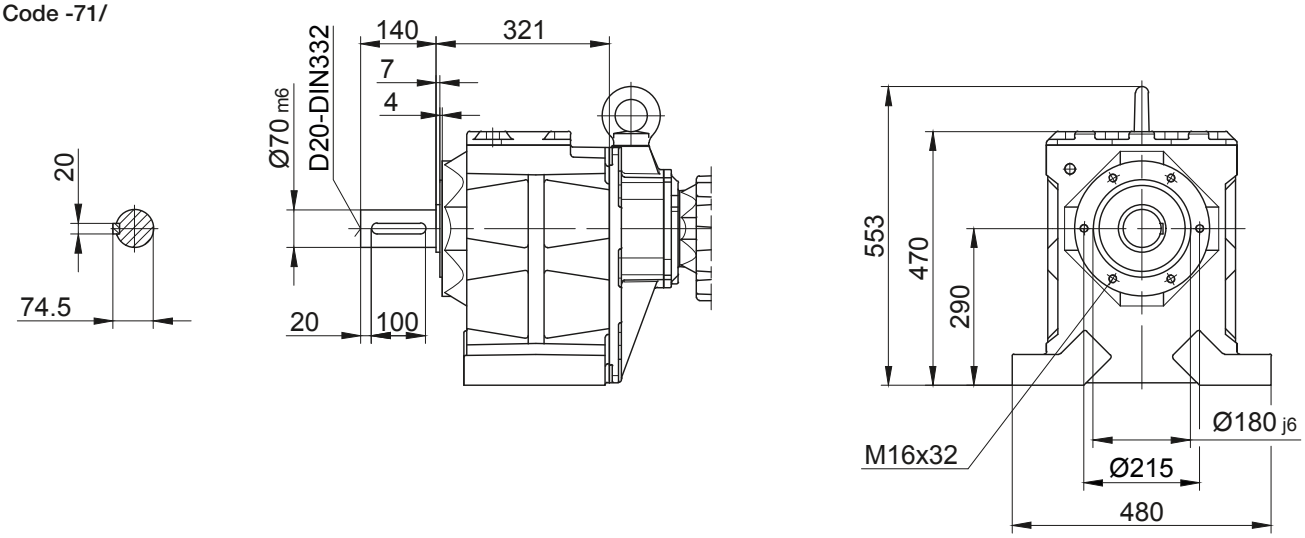

The actual gearbox design can vary from the geometry shown. Generate drive specific 3D and 2D geometries under www.BauerCat.com.

BG-series helical-geared motors

Dimension - Tandem Gearbox

BG90G50

Foot mounting with clearance holes

Code -11/

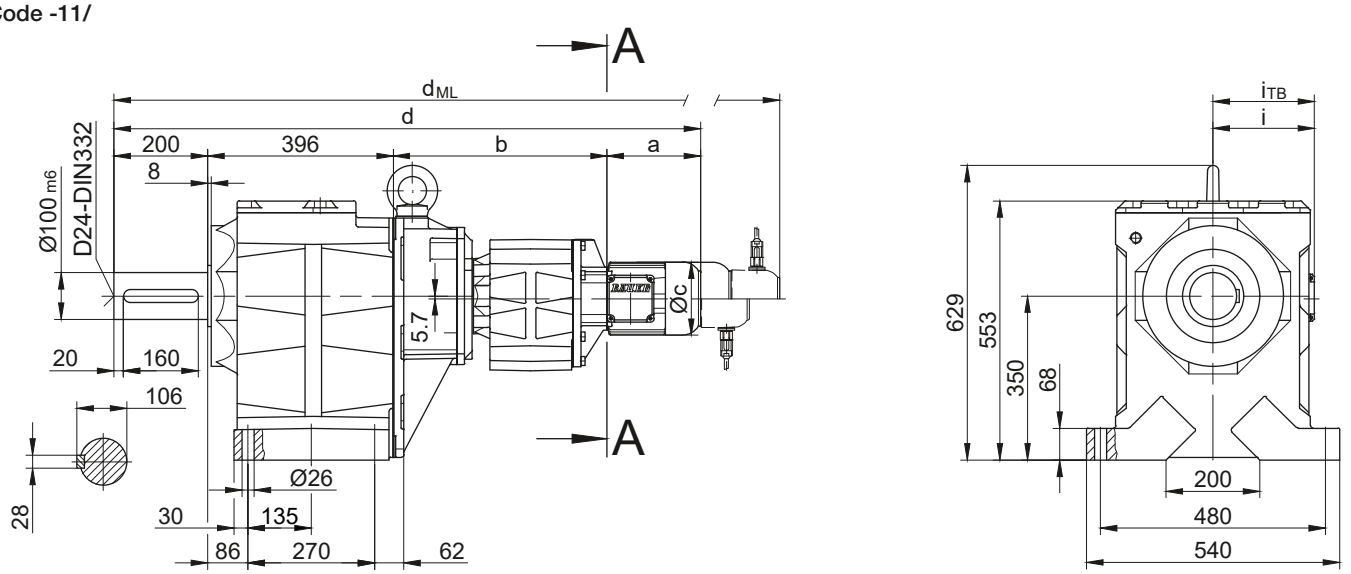

Flange with clearance holes

Code -37/

(Code -47/)

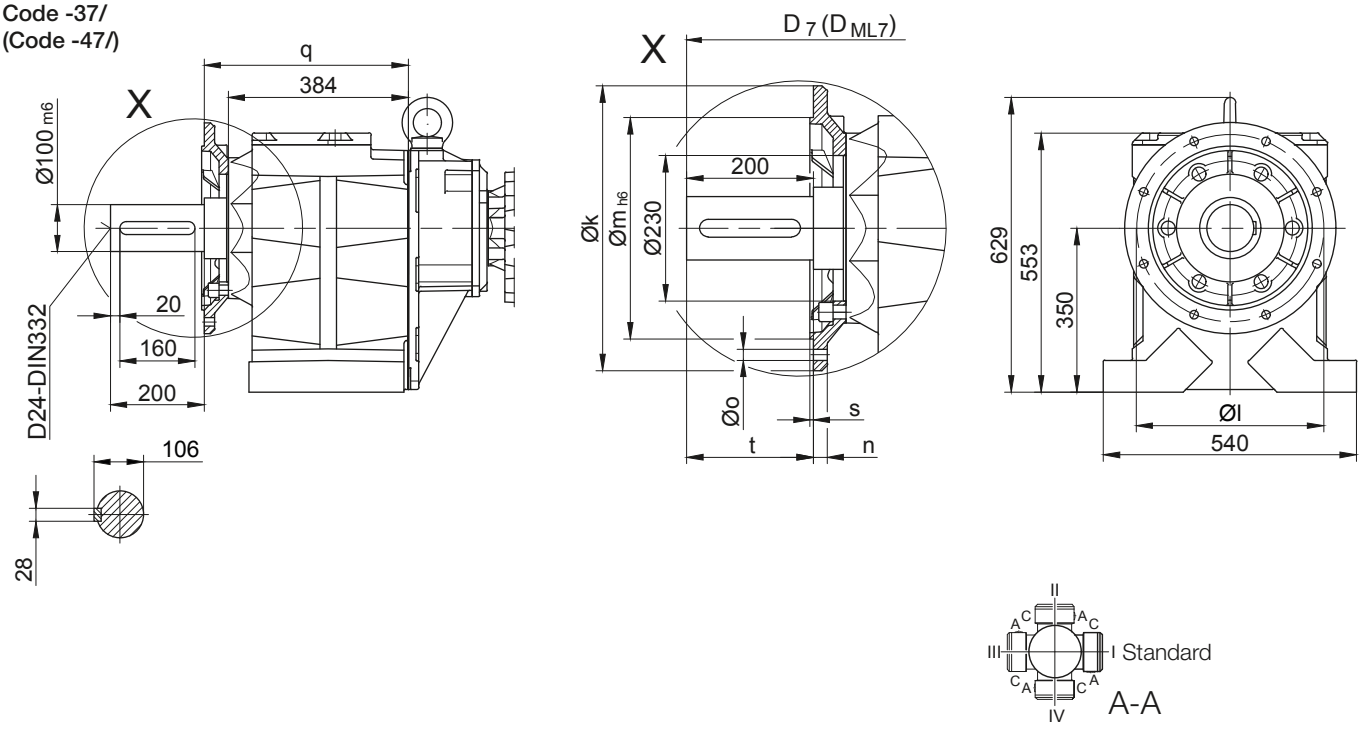

Flange Dimensions											
Type	Design	k	l	m	n	o	q	s	t	D_7	D_{ML7}
BG90..	Code -37/	450	400	350	22	17.5	439	5	200	d+43	d_{ML}+43
BG90..	Code -47/	550	500	450	22	17.5	444	5	195	d+43	d_{ML}+43
Dimensions in millimetres (mm)											

Type	a	b	c	d	i	Design with motor extensions				
						i_{TB}	Brake	Encoder	Brake with Encoder	Back Stop
							d_{ML}	d_{ML}	d_{ML}	d_{ML}
BG90G50-../D..08.A.	199.5	456	156	1251.5	116	136.5	1317.5	1363.5	1425	1317.5
BG90G50-../D..08.B.	229.5	456	156	1281.5	116	136.5	1347.5	1393.5	1454.5	1347.5
BG90G50-../D..09.A.	250.5	470.5	176	1317	125.5	157	1410	1424.5	1514	1410
BG90G50-../D..09.B.	308.5	470.5	176	1375	125.5	157	1468	1482	1572	1468
BG90G50-../D..11.A.	319	477	218	1392	165	176	1490	1499.5	1592	1490
BG90G50-../D..11.B.	387	477	218	1460	165	176	1556	1567.5	1660	1556
BG90G50-../D..13.A.	393	490	258	1479	217	217	1590	1586	1691	1587
BG90G50-../D..16.B.	454.5	504	310	1554.5	243	243	1698	1661.5	1801.5	1698
BG90G50-../D..18.B.	542	526	348	1664	288	288	1813.5	1769.5	1917	1813.5
Dimensions in millimetres (mm)										

The actual gearbox design can vary from the geometry shown. Generate drive specific 3D and 2D geometries under www.BauerCat.com.

BG90G50

Flange with clearance holes

Code -71/

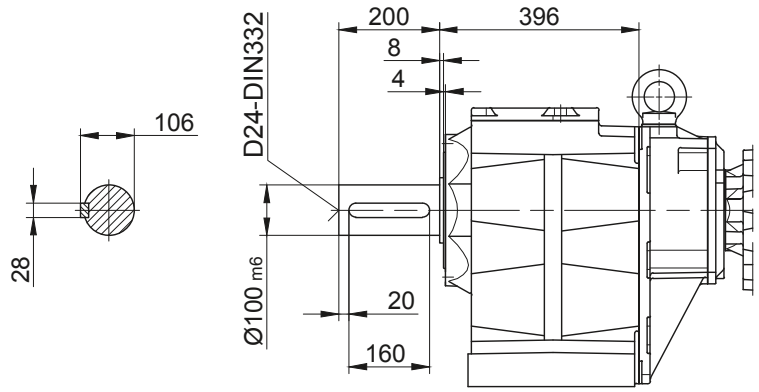

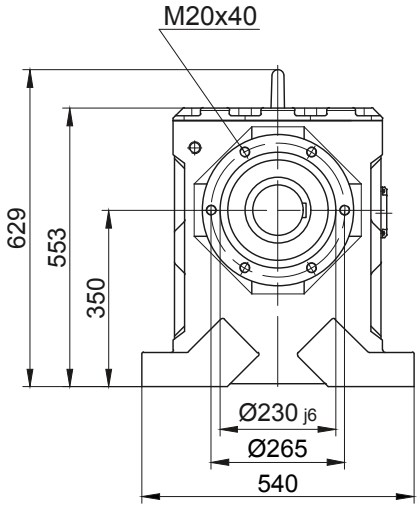

10

BG-series helical-geared motors

Dimension - Tandem Gearbox

BG100G50

Foot mounting with clearance holes
Code -11/

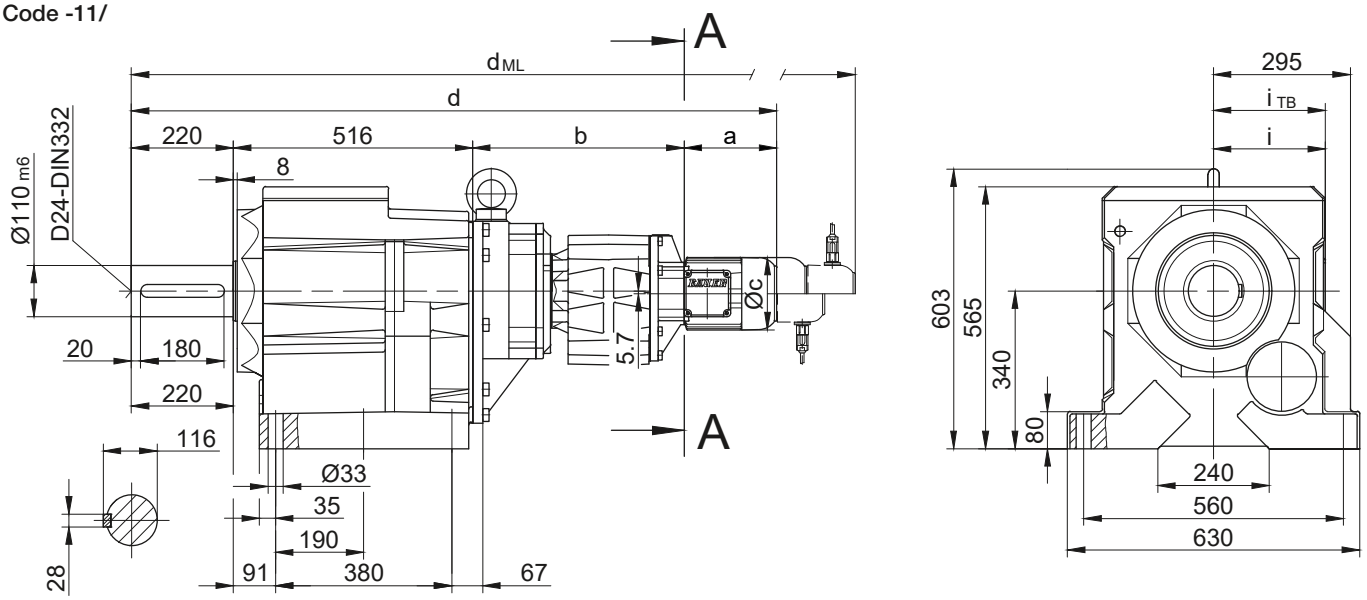

Flange with clearance holes
Code -37/
(Code -47/)

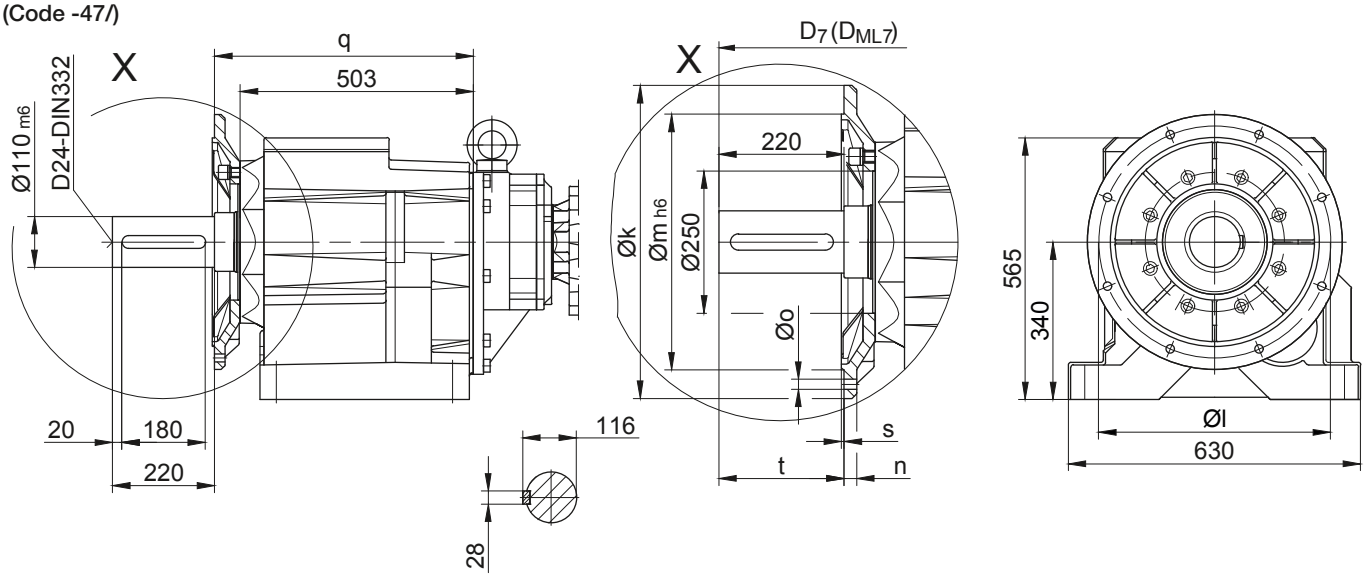

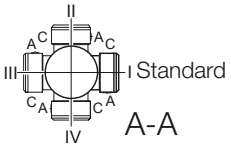

Flange Dimensions											
Type	Design	k	l	m	n	o	q	s	t	D_7	D_{ML7}
BG100..	Code -37/	550	500	450	22	17.5	558	5	220	d+42	d_{ML}+42
BG100..	Code -47/	660	600	550	25	22	552	6	226	d+42	d_{ML}+42
Dimensions in millimetres (mm)											

Type	a	b	c	d	i	Design with motor extensions				
						i_{TB}	Brake	Encoder	Brake with Encoder	Back Stop
							d_{ML}	d_{ML}	d_{ML}	d_{ML}
BG100G50-../D..08.A.	199.5	456	156	1391.5	116	136.5	1457.5	1503.5	1565	1457.5
BG100G50-../D..08.B.	229.5	456	156	1421.5	116	136.5	1487.5	1533.5	1594.5	1487.5
BG100G50-../D..09.A.	250.5	470.5	176	1457	125.5	157	1550	1564.5	1654	1550
BG100G50-../D..09.B.	308.5	470.5	176	1515	125.5	157	1608	1622	1712	1608
BG100G50-../D..11.A.	319	477	218	1532	165	176	1630	1639.5	1732	1630
BG100G50-../D..11.B.	387	477	218	1600	165	176	1696	1707.5	1800	1696
BG100G50-../D..13.A.	393	490	258	1619	217	217	1730	1726	1831	1727
BG100G50-../D..16.B.	454.5	504	310	1694.5	243	243	1838	1801.5	1941.5	1838
BG100G50-../D..18.B.	542	526	348	1804	288	288	1953.5	1909.5	2057	1953.5
Dimensions in millimetres (mm)										

The actual gearbox design can vary from the geometry shown. Generate drive specific 3D and 2D geometries under www.BauerCat.com.

BG100G50

Flange with clearance holes

Code -71/

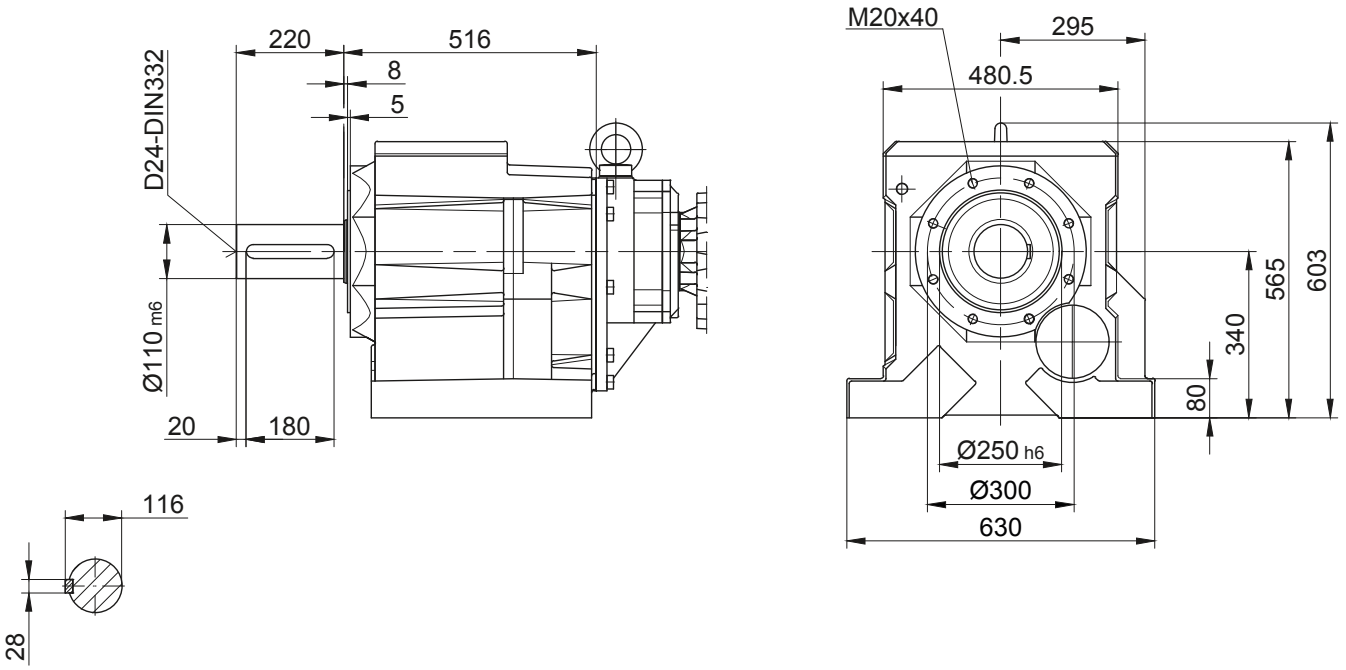

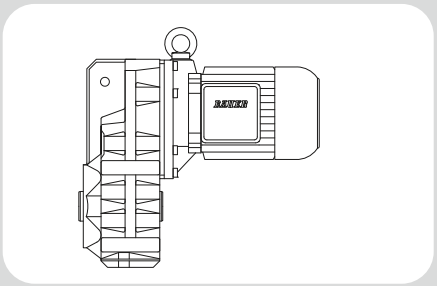

11

BF-series shaft-mounted geared motors - Dimensions

Dimension - Standard **532**
BF06 532
BF10-BF10Z 534
BF20-BF20Z 536
BF30-BF30Z 538
BF40-BF40Z 540
BF50-BF50Z 542
BF60-BF60Z 544
BF70-BF70Z 546
BF80-BF80Z 548
BF90-BF90Z 550
Dimension - Tandem Gearbox **552**
BF10G06 552
BF20G06 554
BF30G06 556
BF40G10 558
BF50G10 560
BF60G20 562
BF70G20 564
BF80G40 566
BF90G50 568
Additional Dimension Sheet **571**
Splined shaft 571
Shrink disc coupling (SSV) 572
Shrink disc coupling with (SSV) cover 573
Tapped Holes Side (H) → Shaft Cover 574
Rubber buffer for torque restraint 575
Assembly tools for hollow shaft and keyway 576
Assembly tools for shaft mounted gears with splined shaft 578
Shaft Cap (VK) 580
Shaft Cover (VD) 581

BF-series shaft-mounted geared motors

Dimension - Standard

BF06

with torque arm

Code -0./

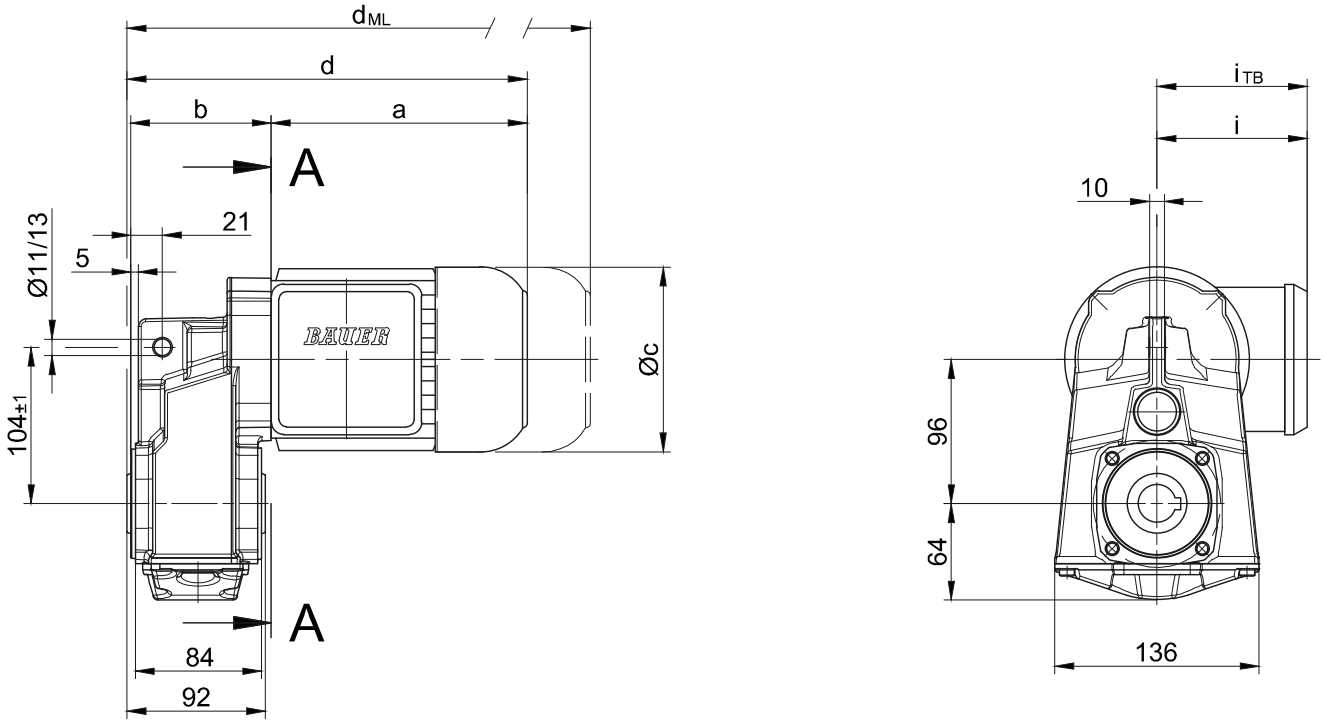

Code -.4/

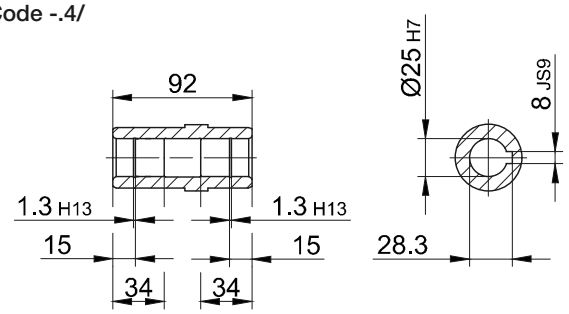

Code -.1/

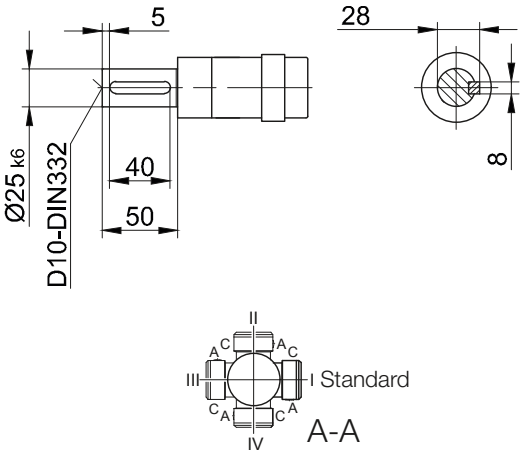

Type	a	b	c	d	i	Design with motor extensions				
						i_{TB}	Brake	Encoder	Brake with Encoder	Back Stop
							d_{ML}	d_{ML}	d_{ML}	d_{ML}
BF06-../D..05.A.	170.5	93.5	123	266.5	101.5	117	306	366.5	404	-
BF06-../D..06.A.	170.5	93.5	123	266.5	101.5	119	306	366.5	404	-
BF06-../D..07.A.	190.5	93.5	123	286.5	101.5	119	326	386.5	424	-
BF06-../D..08.A.	199.5	141.5	156	343.5	116	136.5	407	453	514.5	407
BF06-../D..08.B.	229.5	141.5	156	373.5	116	136.5	437	483	544	437

Dimensions in millimetres (mm)

The actual gearbox design can vary from the geometry shown. Generate drive specific 3D and 2D geometries under www.BauerCat.com.

BF06

Flange with tapped holes
Code -7./

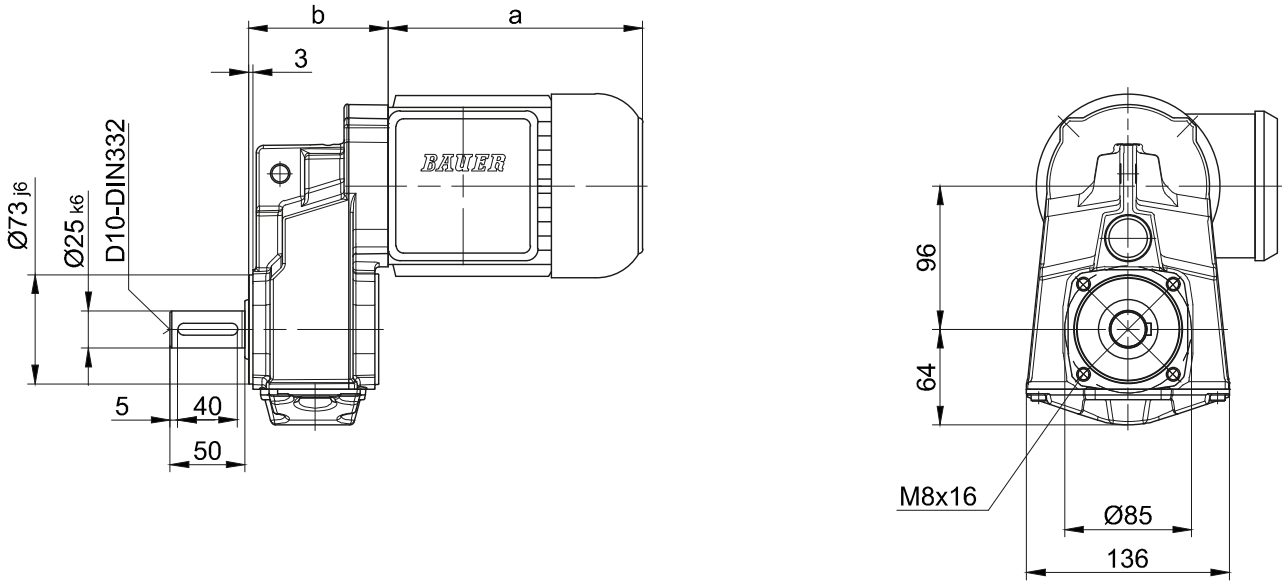

Flange with clearance holes
Code -3.V/
(Code -4.V/)

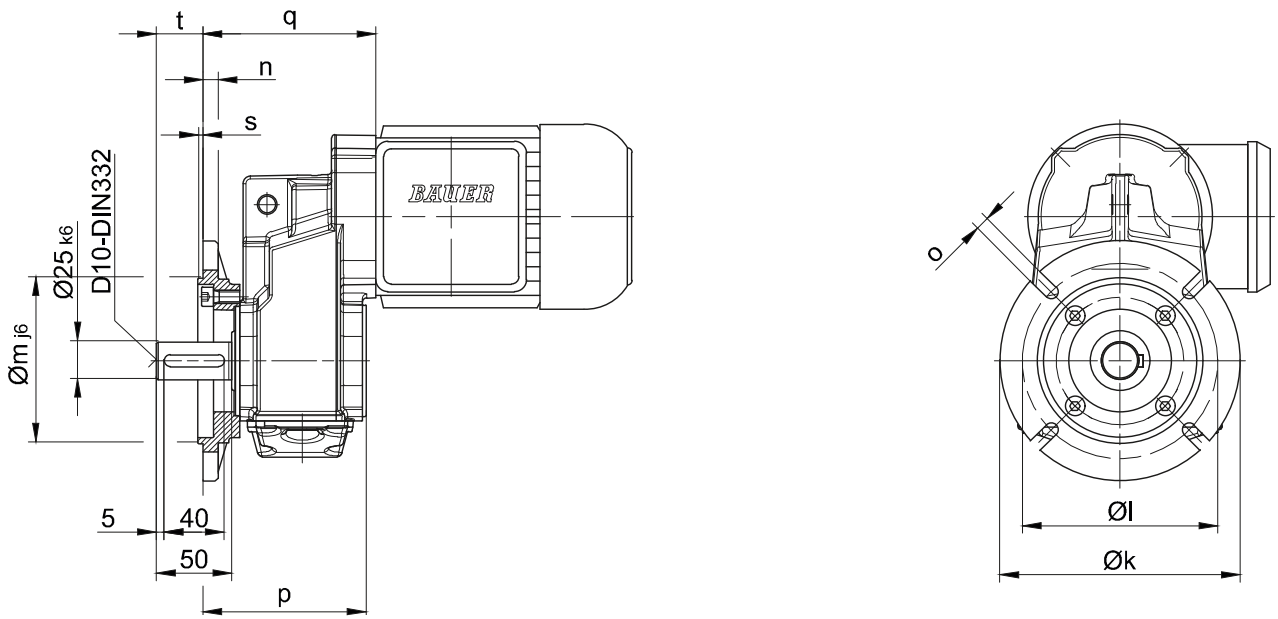

Flange Dimensions											
Type	Design	k	l	m	n	o	p	q[1)]	q[2)]	s	t
BF06	Code -3./	140	115	95	10	9	108.5	115	163	3	31
BF06	Code -4./	160	130	110	10	9	108.5	115	163	3.5	31
Dimensions in millimetres (mm)											

q[1)] only for D05; D06; D07
q[2)] only for D08..

The actual gearbox design can vary from the geometry shown. Generate drive specific 3D and 2D geometries under www.BauerCat.com.

BF-series shaft-mounted geared motors

Dimension - Standard

BF10-BF10Z

with torque arm

Code -0./

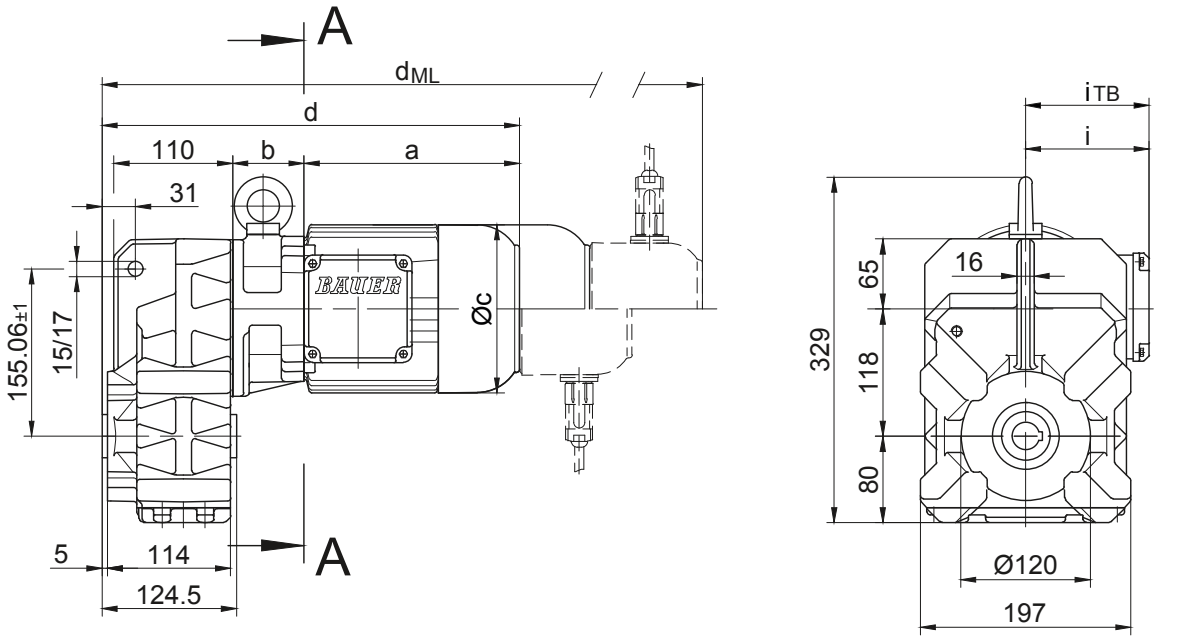

Code -.4/

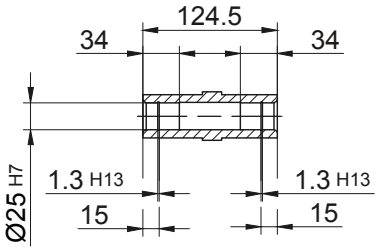

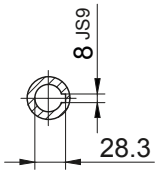

Code -.1/

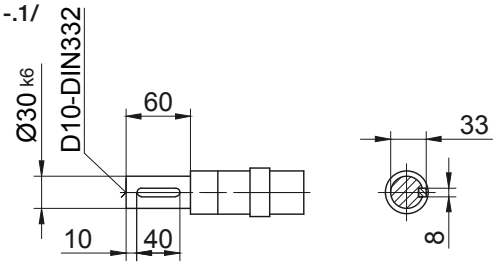

Code .-5/

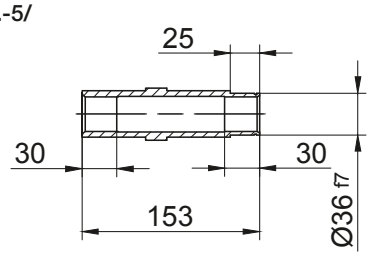

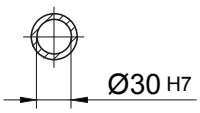

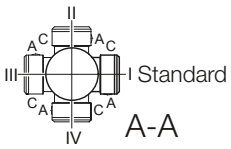

Type	a	b	c	d	i	Design with motor extensions				
						i_{TB}	Brake	Encoder	Brake with Encoder	Back Stop
							d_{ML}	d_{ML}	d_{ML}	d_{ML}
BF10Z-../D04.A.	142.5	86	110.5	349.5	90	112	393	437	480.5	-
BF10-../D..05.A.	170.5	62	123	353.5	101.5	117	395.5	456	493.5	-
BF10Z-../D..05.A.	170.5	88	123	379.5	101.5	117	421.6	482	519.5	-
BF10-../D..06.A.	170.5	62	123	353.5	101.5	119	395.5	456	493.5	-
BF10Z-../D..06.A.	170.5	88	123	379.5	101.5	119	421.5	482	519.5	-
BF10-../D..07.A.	190.5	62	123	373.5	101.5	119	415.5	476	513.5	-
BF10Z-../D..07.A.	190.5	88	123	399.5	101.5	119	441.5	502	539.5	-
BF10-../D..08.A.	199.5	66	156	386.5	116	136.5	452.5	498.5	560	452.5
BF10Z-../D..08.A.	199.5	132	156	452.5	116	136.5	518.5	564.5	626	518.5
BF10-../D..08.B.	229.5	66	156	416.5	116	136.5	482.5	528.5	589.5	482.5
BF10Z-../D..08.B.	229.5	132	156	482.5	116	136.5	548.5	594.5	655.5	548.5
BF10-../D..09.A.	250.5	80.5	176	452	125.5	157	545	559.5	649	545
BF10-../D..09.B.	308.5	80.5	176	510	125.5	157	603	617	707	603

Dimensions in millimetres (mm)

The actual gearbox design can vary from the geometry shown. Generate drive specific 3D and 2D geometries under www.BauerCat.com.

BF10-BF10Z

Flange with tapped holes
Code -7./

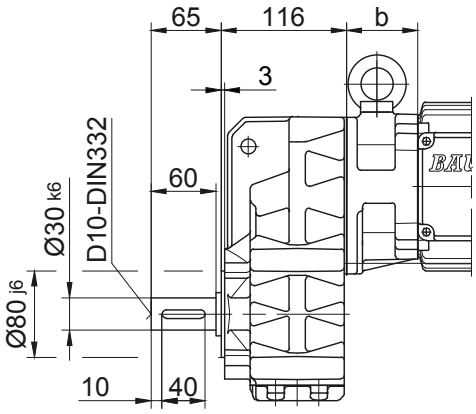

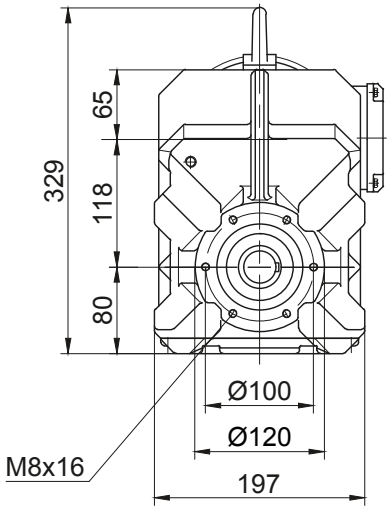

Flange with clearance holes
Code -3./
(Code -2./)

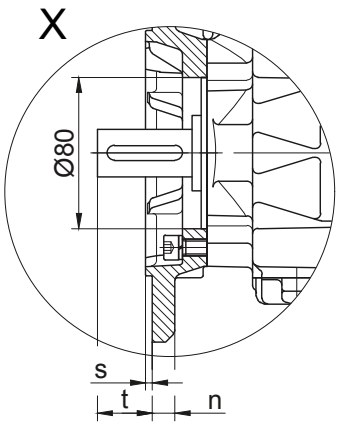

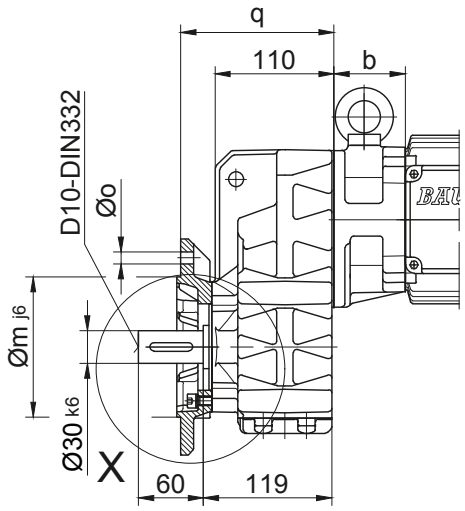

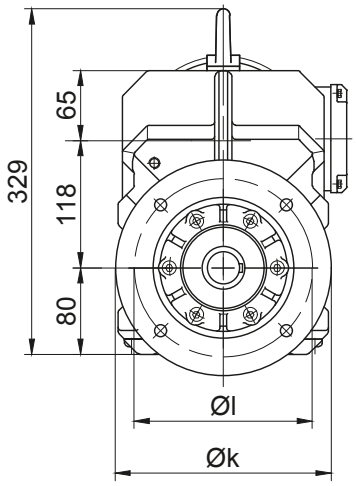

Flange Dimensions									
Type	Design	k	l	m	n	o	q	s	t
BF10..	Code -3./	200	165	130	12	11	142	3.5	39
BF10..	Code -2./	160	130	110	10	9	135	3.5	46
Dimensions in millimetres (mm)									

Foot with tapped holes left and right
Code -6.LR/

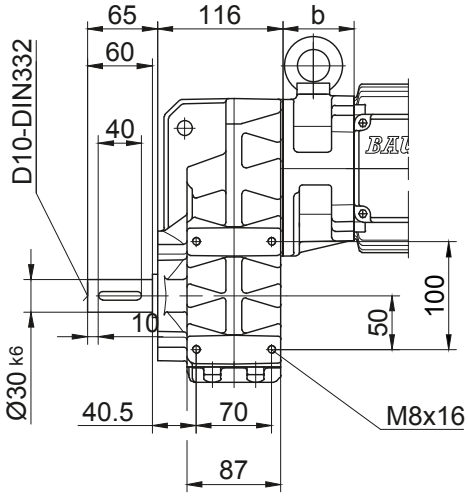

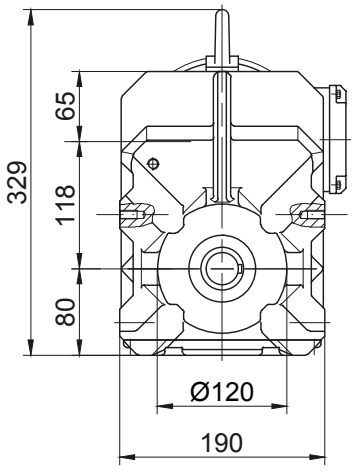

The actual gearbox design can vary from the geometry shown. Generate drive specific 3D and 2D geometries under www.BauerCat.com.

BF-series shaft-mounted geared motors

Dimension - Standard

BF20-BF20Z
with torque arm
Code -0./

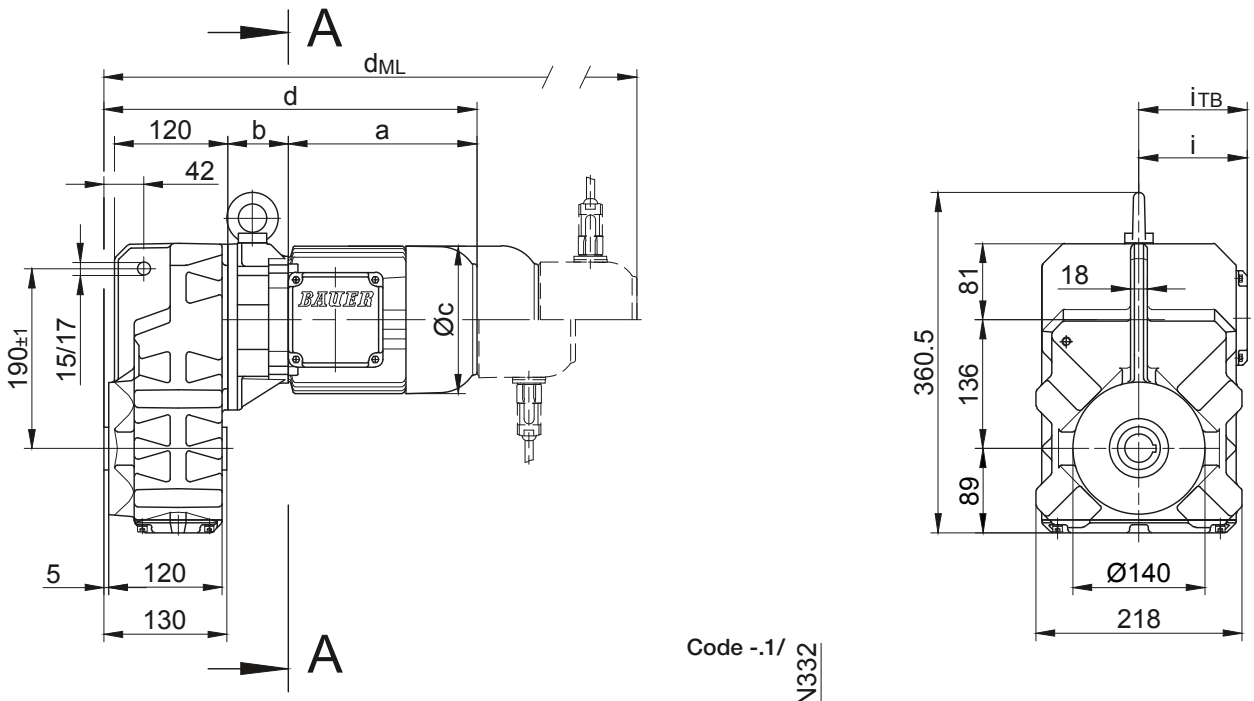

Code -.4/

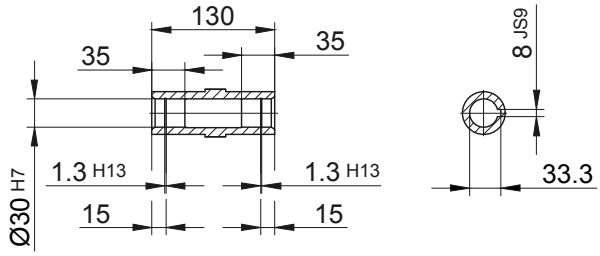

Code -.1/

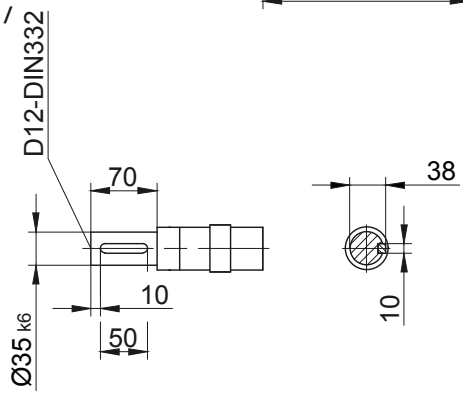

Code -.5/

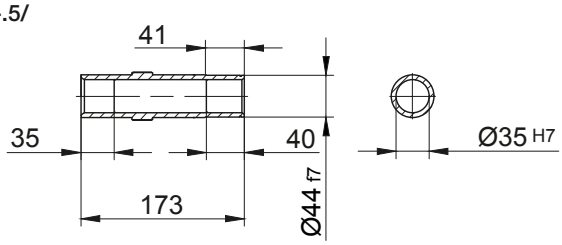

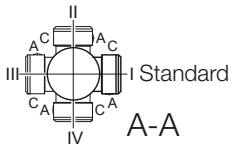

Type	a	b	c	d	i	Design with motor extensions				
						i_{TB}	Brake	Encoder	Brake with Encoder	Back Stop
							d_{ML}	d_{ML}	d_{ML}	d_{ML}
BF20Z-../D04.A.	142.5	100	110.5	373.5	90	112	417	461	504.5	-
BF20-../D..05.A.	170.5	60	123	361.5	101.5	117	403.5	464	501.5	-
BF20Z-../D..05.A.	170.5	102	123	403.5	101.5	117	445.5	506	543.5	-
BF20-../D..06.A.	170.5	60	123	361.5	101.5	119	403.5	464	501.5	-
BF20Z-../D..06.A.	170.5	102	123	403.5	101.5	119	445.5	506	543.5	-
BF20-../D..07.A.	190.5	60	123	381.5	101.5	119	423.5	484	521.5	-
BF20Z-../D..07.A.	190.5	102	123	423.5	101.5	119	465.5	526	563.5	-
BF20-../D..08.A.	199.5	64	156	394.5	116	136.5	460.5	506.5	568	460.5
BF20Z-../D..08.A.	199.5	146	156	476.5	116	136.5	542.5	588.5	650	542.5
BF20-../D..08.B.	229.5	64	156	424.5	116	136.5	490.5	536.5	597.5	490.5
BF20Z-../D..08.B.	229.5	146	156	506.5	116	136.5	572.5	618.5	679.5	572.5
BF20-../D..09.A.	250.5	78.5	176	460	125.5	157	553	567.5	657	553
BF20-../D..09.B.	308.5	78.5	176	518	125.5	157	611	625	715	611

Dimensions in millimetres (mm)

The actual gearbox design can vary from the geometry shown. Generate drive specific 3D and 2D geometries under www.BauerCat.com.

BF20-BF20Z

Flange with tapped holes
Code -7./

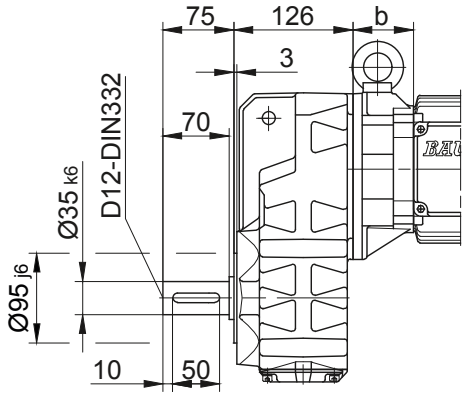

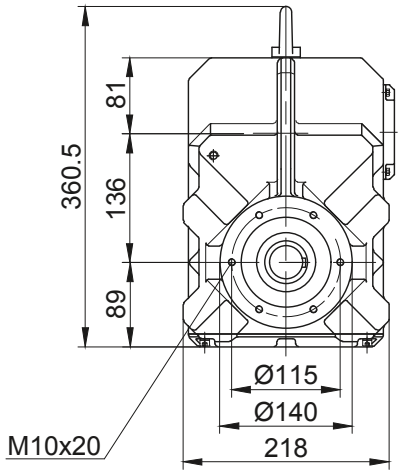

Flange with clearance holes
Code -3./
(Code -2./)

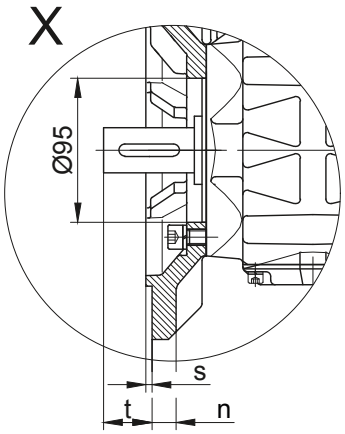

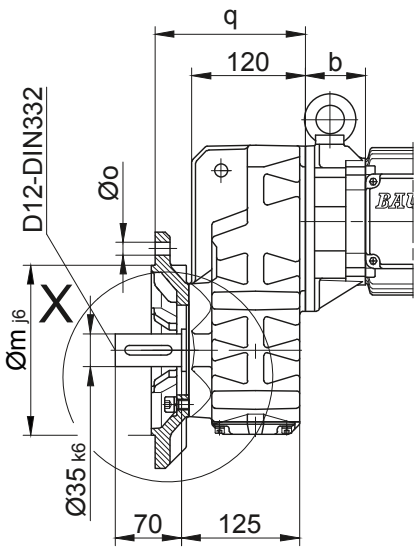

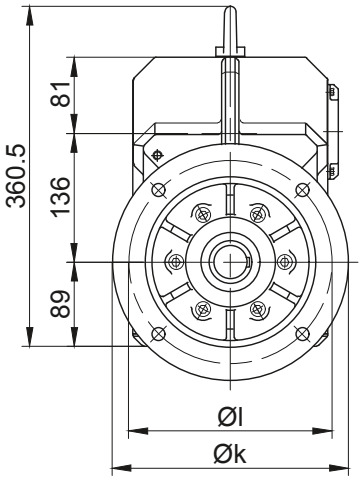

Flange Dimensions									
Type	Design	k	l	m	n	o	q	s	t
BF20..	Code -3./	250	215	180	16	13.5	159	4	42
BF20..	Code -2./	200	165	130	12	11	150	3.5	51
Dimensions in millimetres (mm)									

Foot with tapped holes left and right
Code -6.LR/

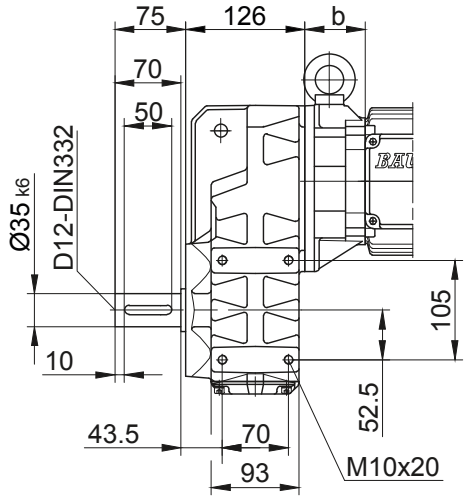

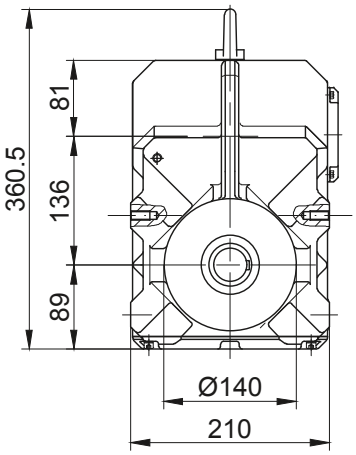

The actual gearbox design can vary from the geometry shown. Generate drive specific 3D and 2D geometries under www.BauerCat.com.

BF-series shaft-mounted geared motors

Dimension - Standard

BF30-BF30Z

with torque arm

Code -0./

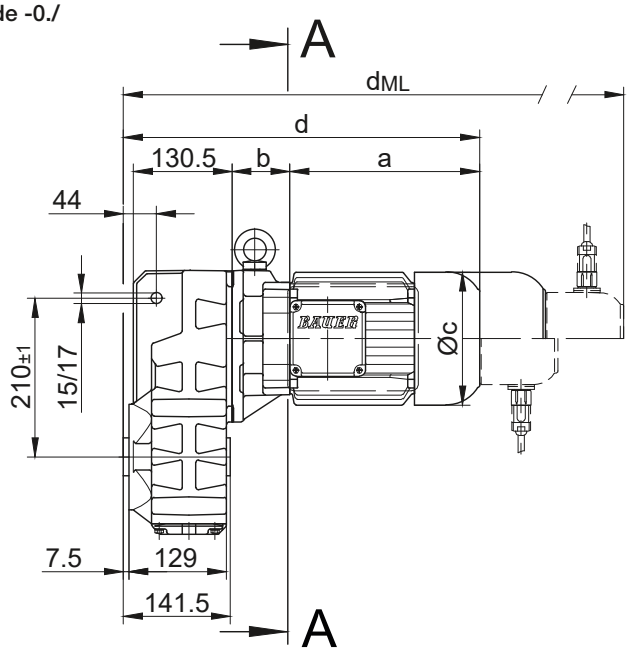

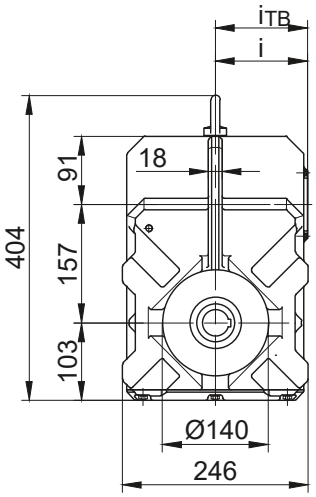

Code -.1/

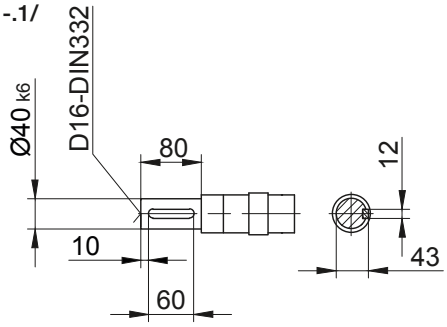

Code -.4/

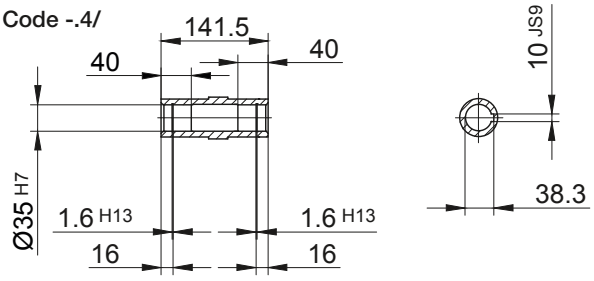

Code -.5/

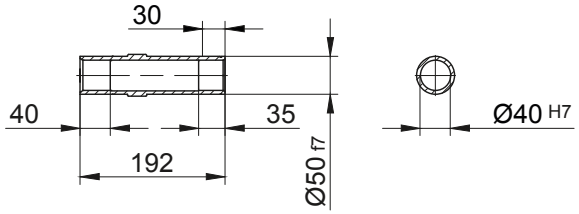

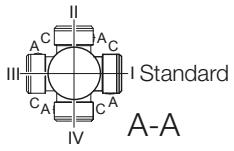

Type	a	b	c	d	i	Design with motor extensions				
						i_{TB}	Brake	Encoder	Brake with Encoder	Back Stop
							d_{ML}	d_{ML}	d_{ML}	d_{ML}
BF30-../D..05.A.	170.5	58	123	372.5	101.5	117	414.5	475	512.5	-
BF30Z-../D..05.A.	170.5	133.5	123	448	101.5	117	490	550.5	588	-
BF30-../D..06.A.	170.5	58	123	372.5	101.5	119	414.5	475	512.5	-
BF30Z-../D..06.A.	170.5	133.5	123	448	101.5	119	490	550.5	588	-
BF30-../D..07.A.	190.5	58	123	392.5	101.5	119	434.5	495	532.5	-
BF30Z-../D..07.A.	190.5	133.5	123	468	101.5	119	510	570.5	608	-
BF30-../D..08.A.	199.5	62	156	405.5	116	136.5	471.5	517.5	579	471.5
BF30Z-../D..08.A.	199.5	137.5	156	481	116	136.5	547	593	654.5	547
BF30-../D..08.B.	229.5	62	156	435.5	116	136.5	501.5	547.5	608.5	501.5
BF30Z-../D..08.B.	229.5	137.5	156	511	116	136.5	577	623	684	577
BF30-../D..09.A.	250.5	76.5	176	471	125.5	157	564	578.5	668	564
BF30Z-../D..09.A.	250.5	152	176	546.5	125.5	157	639.5	654	743.5	639.5
BF30-../D..09.B.	308.5	76.5	176	529	125.5	157	622	636	726	622
BF30Z-../D..09.B.	308.5	152	176	604.5	125.5	157	697.5	711.5	801.5	697.5
BF30-../D..11.A.	319	83	218	546	165	176	644	653.5	746	644
BF30-../D..11.B.	387	83	218	614	165	176	710	721.5	814	710

Dimensions in millimetres (mm)

The actual gearbox design can vary from the geometry shown. Generate drive specific 3D and 2D geometries under www.BauerCat.com.

BF30-BF30Z

Flange with tapped holes
Code -7./

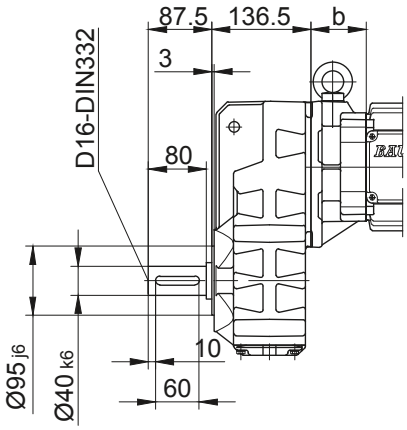

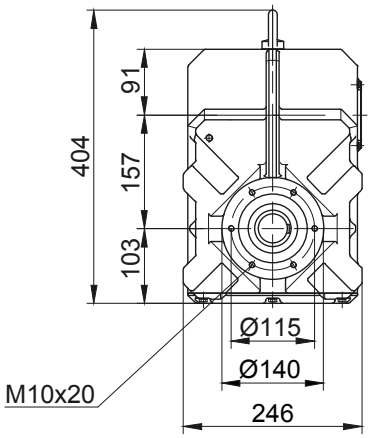

Flange with clearance holes
Code -3./
(Code -2./)

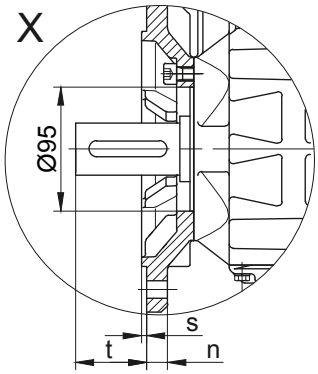

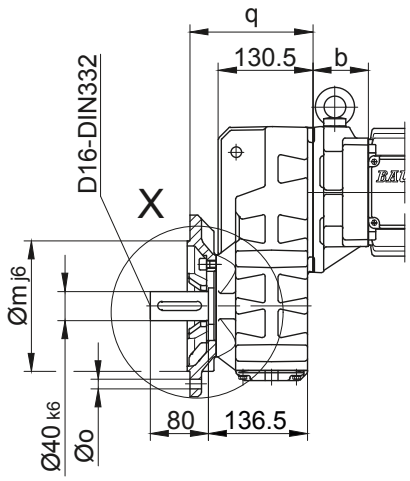

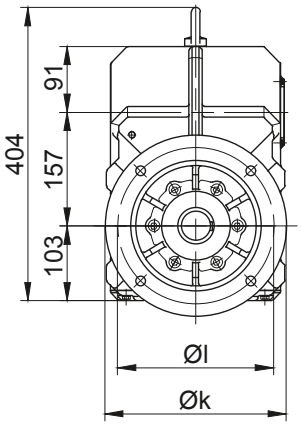

Flange Dimensions									
Type	Design	k	l	m	n	o	q	s	t
BF30..	Code -3./	250	215	180	16	13.5	169.5	4	54.5
BF30..	Code -2./	200	165	130	12	11	160.5	3.5	63.5
Dimensions in millimetres (mm)									

Foot with tapped holes left and right
Code -6.LR/

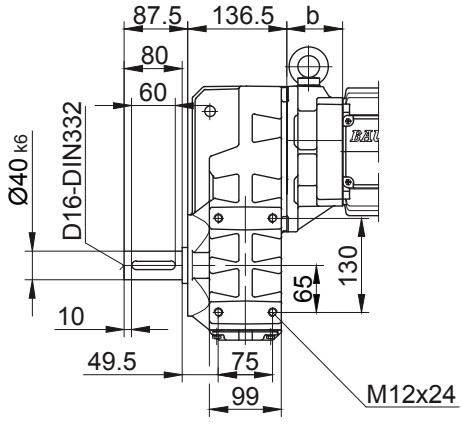

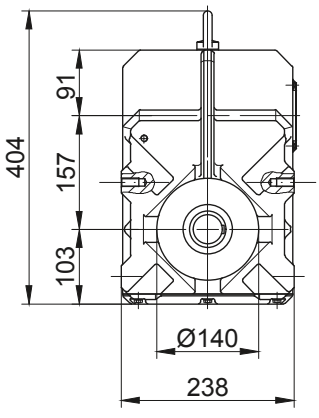

BF-series shaft-mounted geared motors

Dimension - Standard

BF40-BF40Z
with torque arm
Code -0./

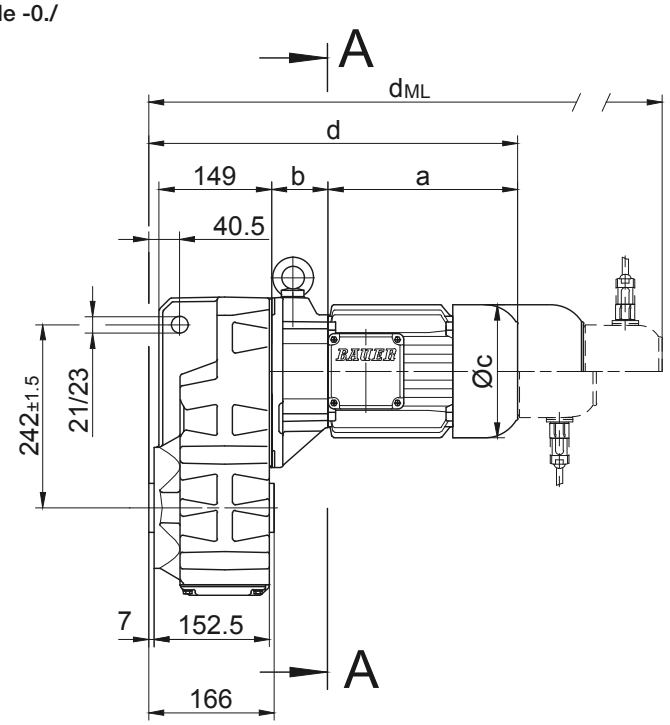

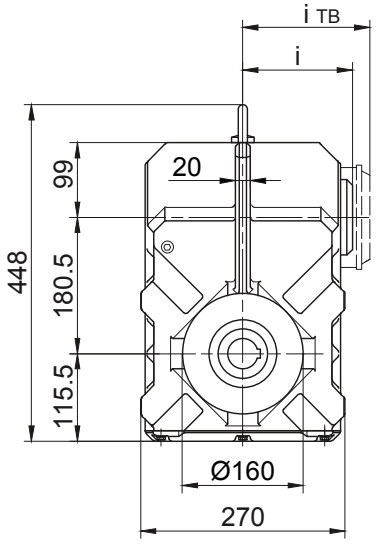

Code -.1/

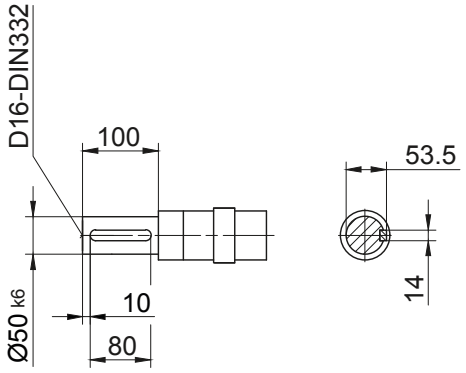

Code -.4/

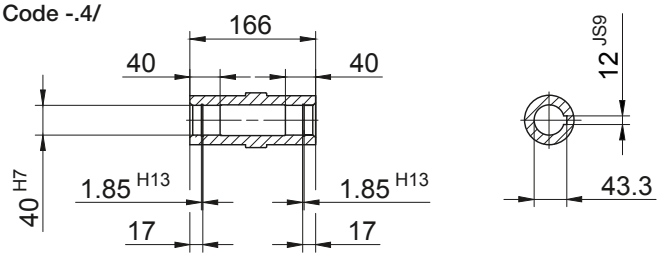

Code -.5/

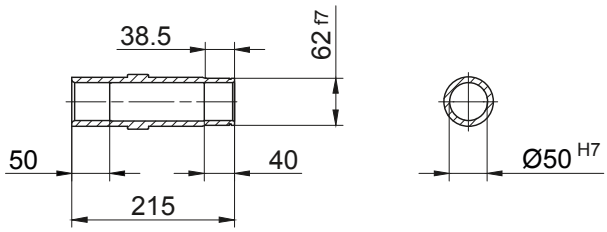

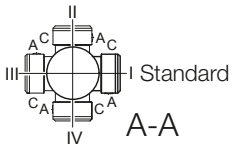

Type	a	b	c	d	i	Design with motor extensions				
						i_{TB}	Brake	Encoder	Brake with Encoder	Back Stop
							d_{ML}	d_{ML}	d_{ML}	d_{ML}
BF40Z-../D..05.A.	170.5	138.5	123	471.5	101.5	117	513.5	574	611.5	-
BF40Z-../D..06.A.	170.5	138.5	123	471.5	101.5	119	513.5	574	611.5	-
BF40Z-../D..07.A.	190.5	138.5	123	491.5	101.5	119	533.5	594	631.5	-
BF40-../D..08.A.	199.5	60	156	422	116	136.5	488	534	595.5	488
BF40Z-../D..08.A.	199.5	142.5	156	504.5	116	136.5	570.5	616.5	678	570.5
BF40-../D..08.B.	229.5	60	156	452	116	136.5	518	564	625	518
BF40Z-../D..08.B.	229.5	142.5	156	534.5	116	136.5	600.5	646.5	707.5	600.5
BF40-../D..09.A.	250.5	74.5	176	487.5	125.5	157	580.5	595	684.5	580.5
BF40Z-../D..09.A.	250.5	157	176	570	125.5	157	663	677.5	767	663
BF40-../D..09.B.	308.5	74.5	176	545.5	125.5	157	638.5	652.5	742.5	638.5
BF40Z-../D..09.B.	308.5	157	176	628	125.5	157	721	735	825	721
BF40-../D..11.A.	319	81	218	562.5	165	176	660.5	670	762.5	660.5
BF40-../D..11.B.	387	81	218	630.5	165	176	726.5	738	830.5	726.5

Dimensions in millimetres (mm)

The actual gearbox design can vary from the geometry shown. Generate drive specific 3D and 2D geometries under www.BauerCat.com.

BF40-BF40Z

Flange with tapped holes
Code -7./

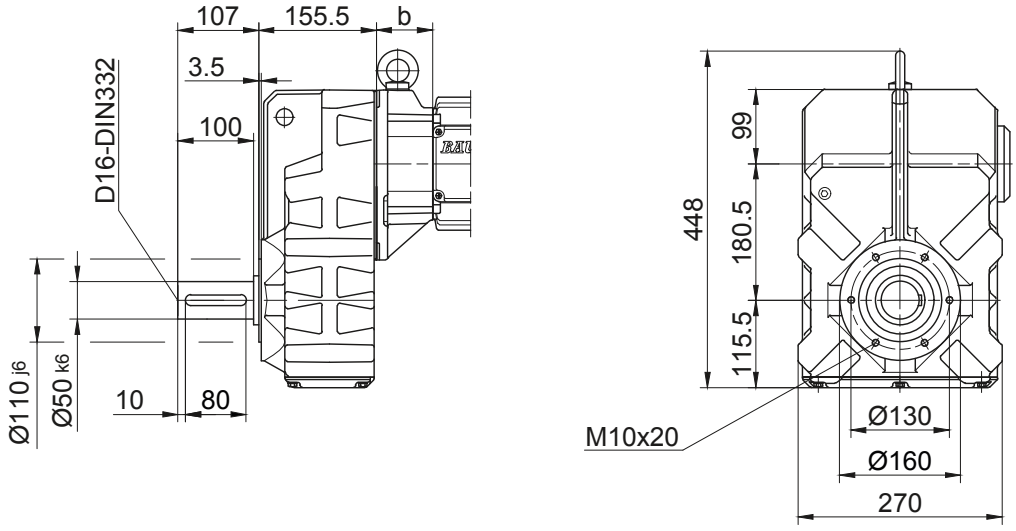

Flange with clearance holes
Code -3./
(Code -4./)

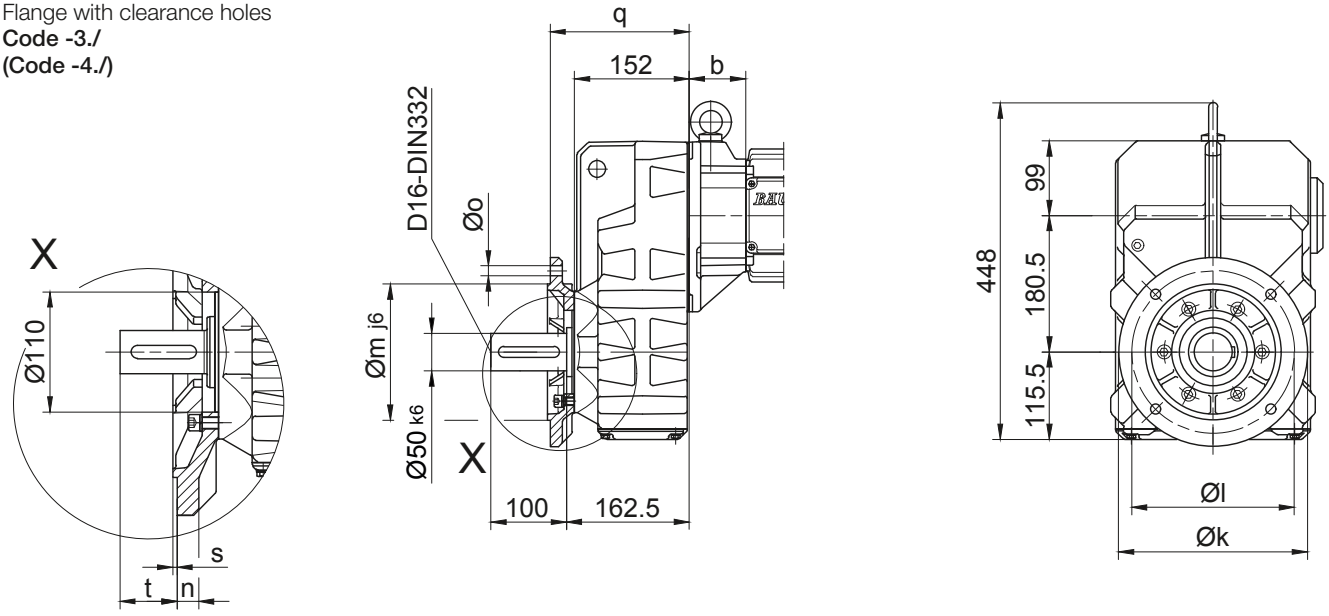

Flange Dimensions									
Type	Design	k	l	m	n	o	q	s	t
BF40..	Code -3./	250	215	180	16	13.5	184	4	78.5
BF40..	Code -4./	300	265	230	20	13.5	190	4	72.5
Dimensions in millimetres (mm)									

Foot with tapped holes left and right
Code -6.LR/

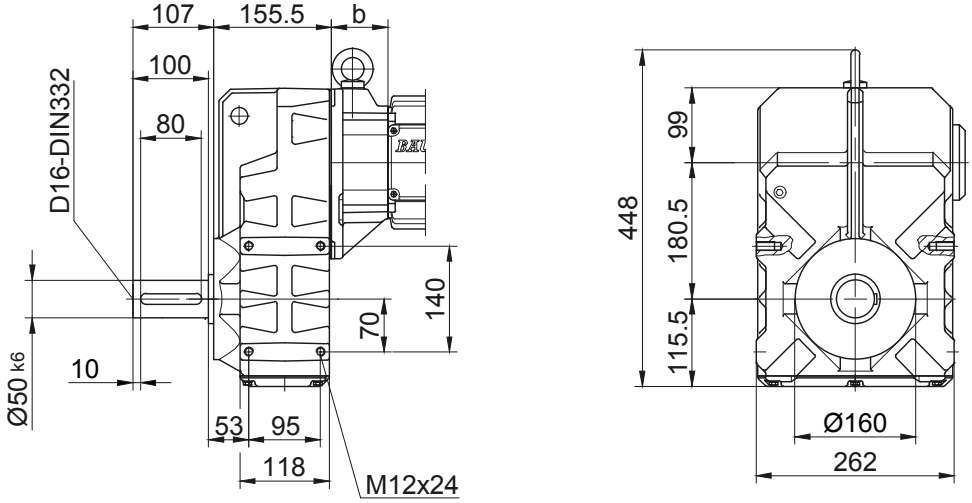

BF-series shaft-mounted geared motors

Dimension - Standard

BF50-BF50Z

with torque arm

Code -0./

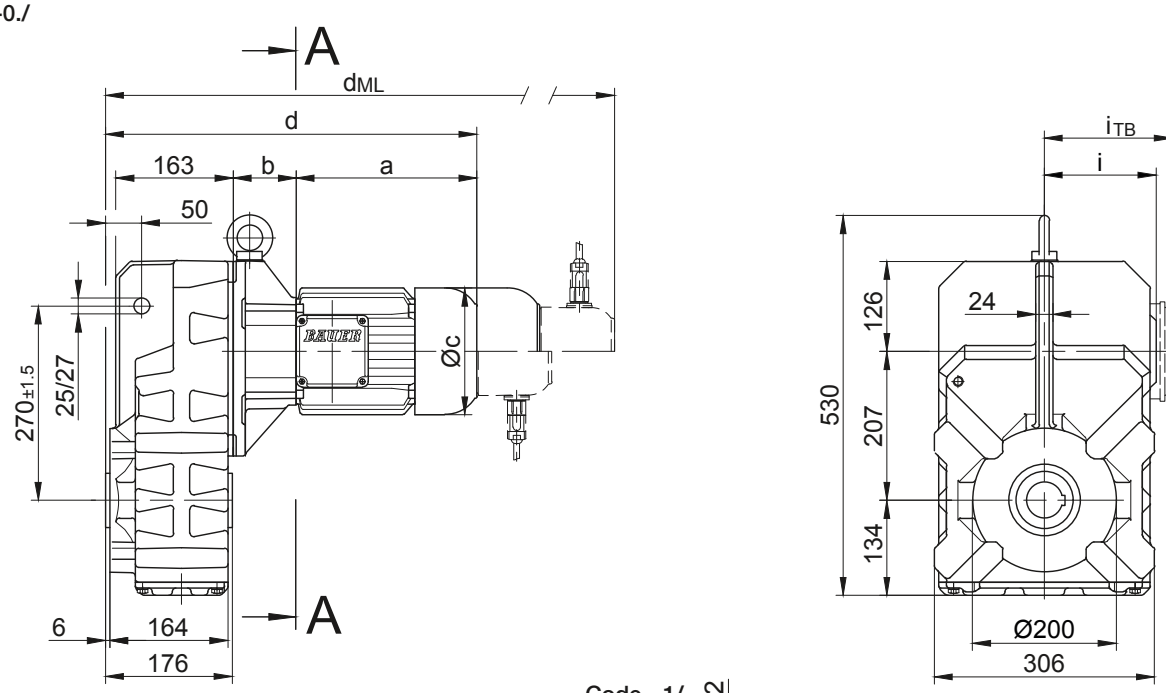

Code -.1/

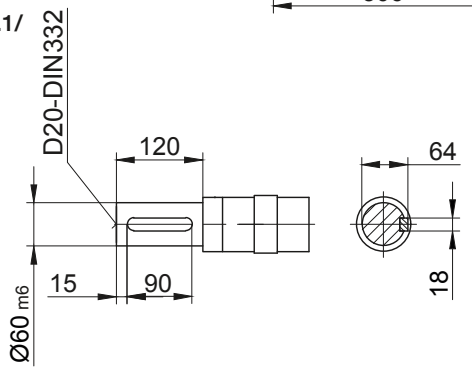

Code -.4/

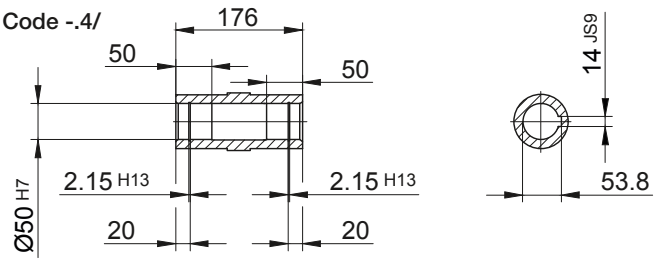

Code -.5/

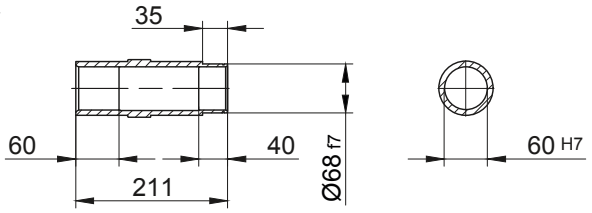

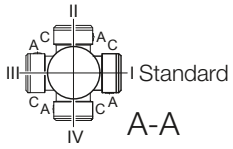

Type	a	b	c	d	i	Design with motor extensions				
						i_{TB}	Brake	Encoder	Brake with Encoder	Back Stop
							d_{ML}	d_{ML}	d_{ML}	d_{ML}
BF50Z-../D..05.A.	170.5	155	123	503	101.5	117	545	605.5	643	-
BF50Z-../D..06.A.	170.5	155	123	503	101.5	119	545	605.5	643	-
BF50Z-../D..07.A.	190.5	155	123	523	101.5	119	565	625.5	663	-
BF50-../D..08.A.	199.5	73	156	450	116	136.5	516	562	623.5	516
BF50Z-../D..08.A.	199.5	159	156	536	116	136.5	602	648	709.5	602
BF50-../D..08.B.	229.5	73	156	480	116	136.5	546	592	653	546
BF50Z-../D..08.B.	229.5	159	156	566	116	136.5	632	678	739	632
BF50-../D..09.A.	250.5	87.5	176	515.5	125.5	157	608.5	623	712.5	608.5
BF50Z-../D..09.A.	250.5	173.5	176	601.5	125.5	157	694.5	709	798.5	694.5
BF50-../D..09.B.	308.5	87.5	176	573.5	125.5	157	666.5	680.5	770.5	666.5
BF50Z-../D..09.B.	308.5	173.5	176	659.5	125.5	157	752.5	766.5	856.5	752.5
BF50-../D..11.A.	319	94	218	590.5	165	176	688.5	698	790.5	688.5
BF50-../D..11.B.	387	94	218	658.5	165	176	754.5	766	858.5	754.5
BF50-../D..13.A.	393	107	258	677.5	217	217	788.5	784.5	889.5	785.5
BF50-../D..16.B.	454.5	121	310	753	243	243	896.5	860	1000	896.5
BF50-../D..18.B.	542	143	348	862.5	288	288	1012	968	1115.5	1012

Dimensions in millimetres (mm)

The actual gearbox design can vary from the geometry shown. Generate drive specific 3D and 2D geometries under www.BauerCat.com.

BF50-BF50Z

Flange with tapped holes
Code -7./

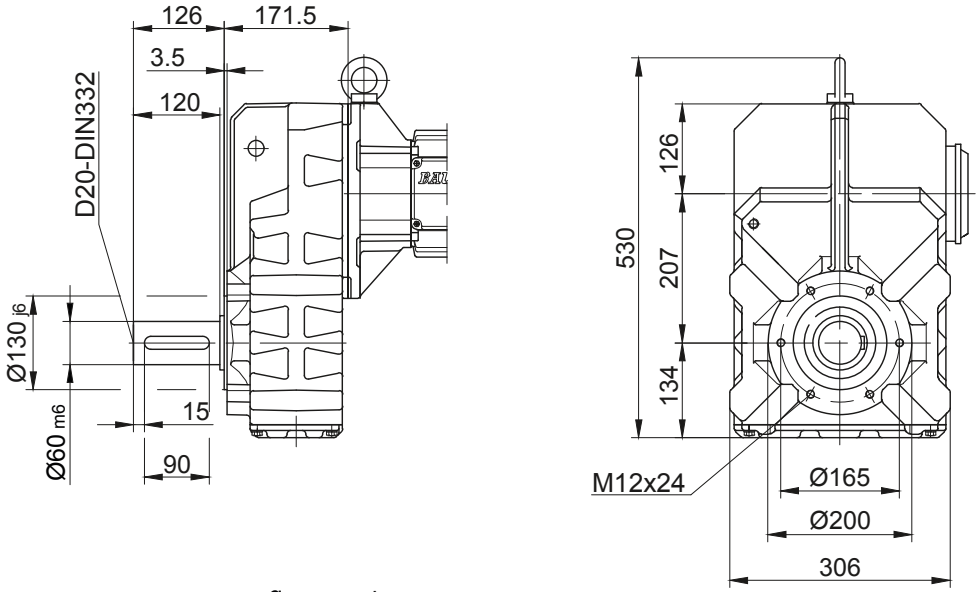

Flange with clearance holes
Code -3./
(Code -2./)

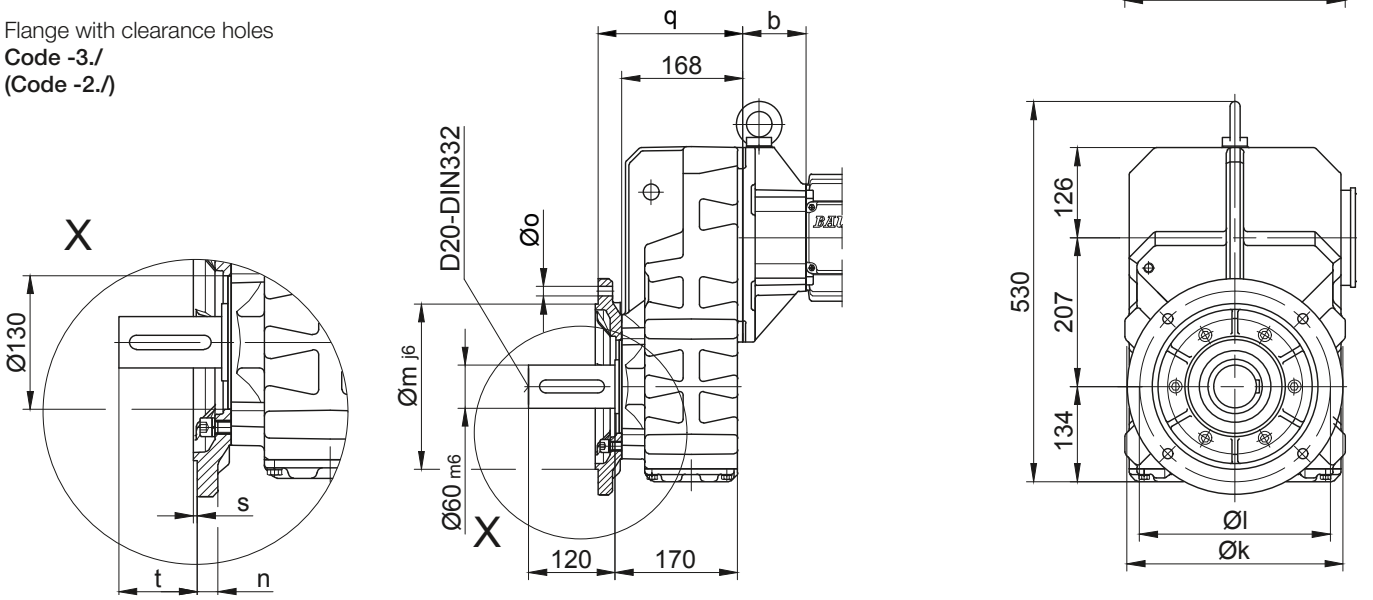

Flange Dimensions									
Type	Design	k	l	m	n	o	q	s	t
BF50..	Code -3./	300	265	230	20	13.5	201	4	96.5
BF50..	Code -2./	250	215	180	16	13.5	198	4	99.5
Dimensions in millimetres (mm)									

Foot with tapped holes left and right
Code -6.LR/

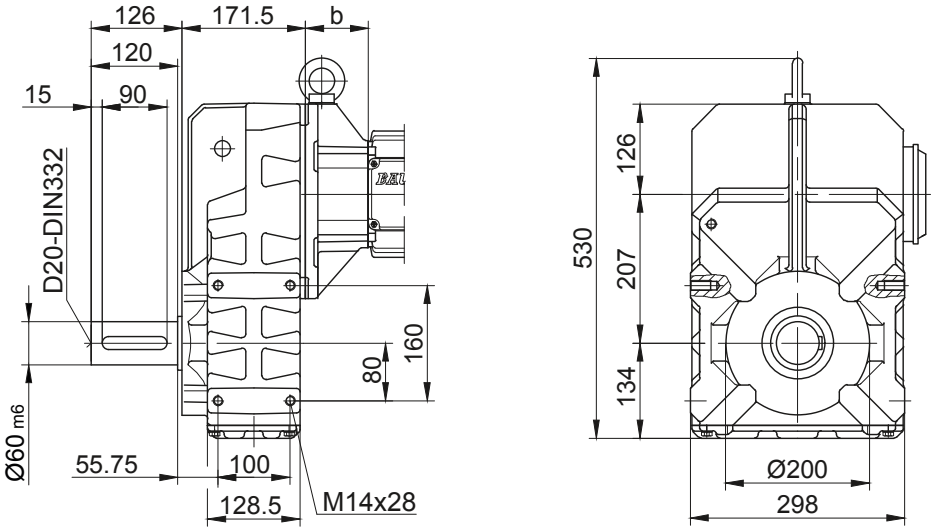

BF-series shaft-mounted geared motors

Dimension - Standard

BF60-BF60Z
with torque arm
Code -0./

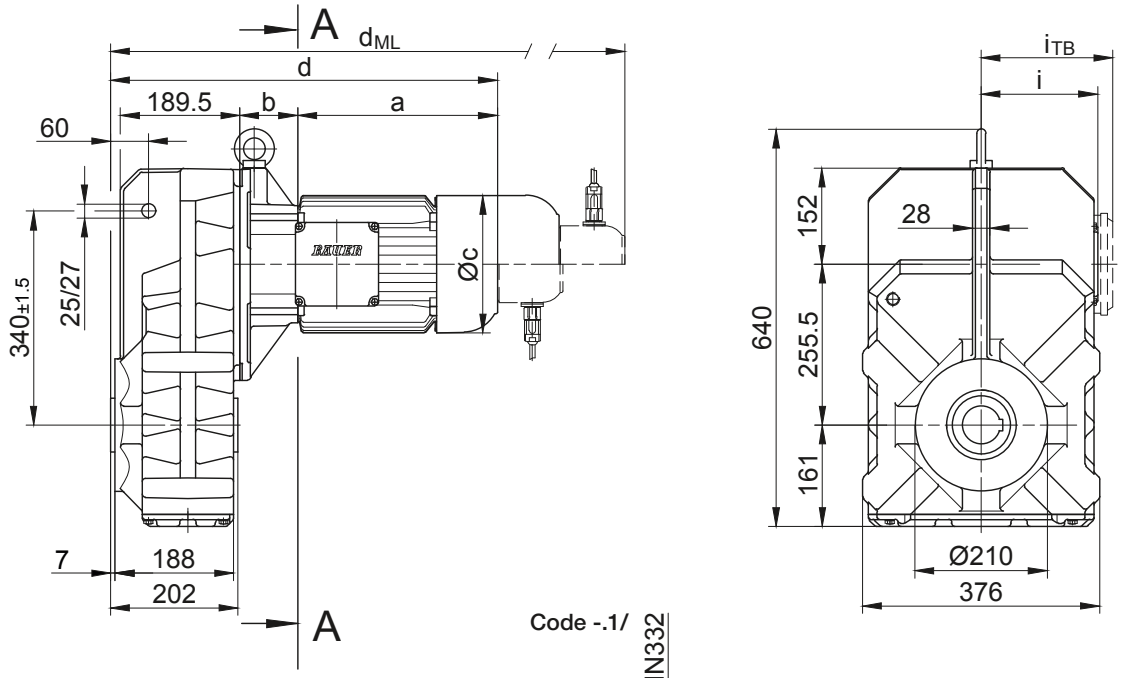

Code -.1/

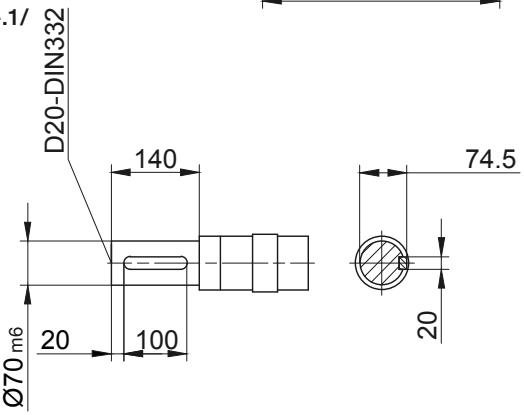

Code -.4/

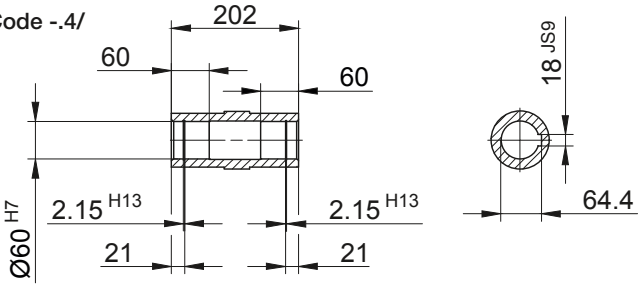

Code -.5/

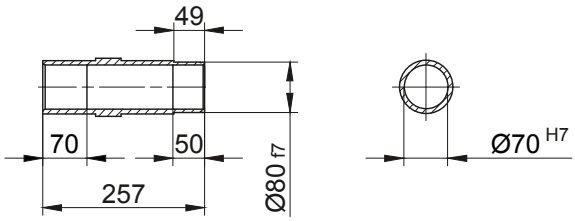

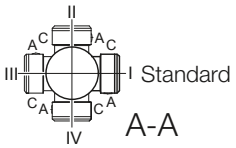

Type	a	b	c	d	i	Design with motor extensions				
						i_{TB}	Brake	Encoder	Brake with Encoder	Back Stop
							d_{ML}	d_{ML}	d_{ML}	d_{ML}
BF60Z-../D..08.A.	199.5	181	156	585.5	116	136.5	651.5	697.5	759	651.5
BF60Z-../D..08.B.	229.5	181	156	615.5	116	136.5	681.5	727.5	788.5	681.5
BF60-../D..09.A.	250.5	85.5	176	541	125.5	157	634	648.5	738	634
BF60Z-../D..09.A.	250.5	195.5	176	651	125.5	157	744	758.5	848	744
BF60-../D..09.B.	308.5	85.5	176	599	125.5	157	692	706	796	692
BF60Z-../D..09.B.	308.5	195.5	176	709	125.5	157	802	816	906	802
BF60-../D..11.A.	319	92	218	616	165	176	714	723.5	816	714
BF60Z-../D..11.A.	319	202	218	726	165	176	824	833.5	926	824
BF60-../D..11.B.	387	92	218	684	165	176	780	791.5	884	780
BF60Z-../D..11.B.	387	202	218	794	165	176	890	901.5	994	890
BF60-../D..13.A.	393	105	258	703	217	217	814	810	915	811
BF60-../D..16.B.	454.5	119	310	778.5	243	243	922	885.5	1025.5	922
BF60-../D..18.B.	542	141	348	888	288	288	1037.5	993.5	1141	1037.5

Dimensions in millimetres (mm)

The actual gearbox design can vary from the geometry shown. Generate drive specific 3D and 2D geometries under www.BauerCat.com.

BF60-BF60Z

Flange with tapped holes
Code -7./

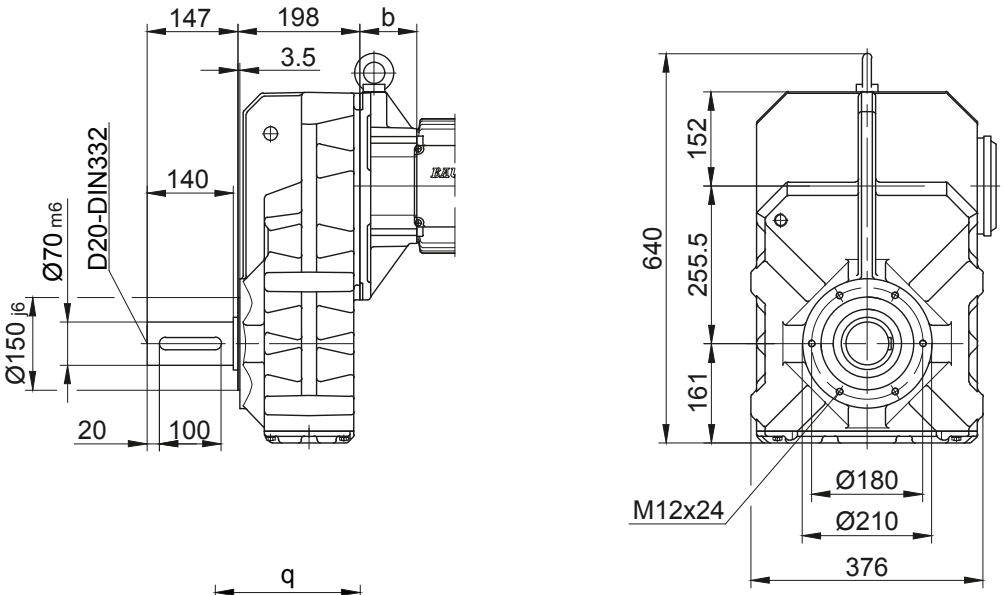

Flange with clearance holes
Code -3./
(Code -2./)

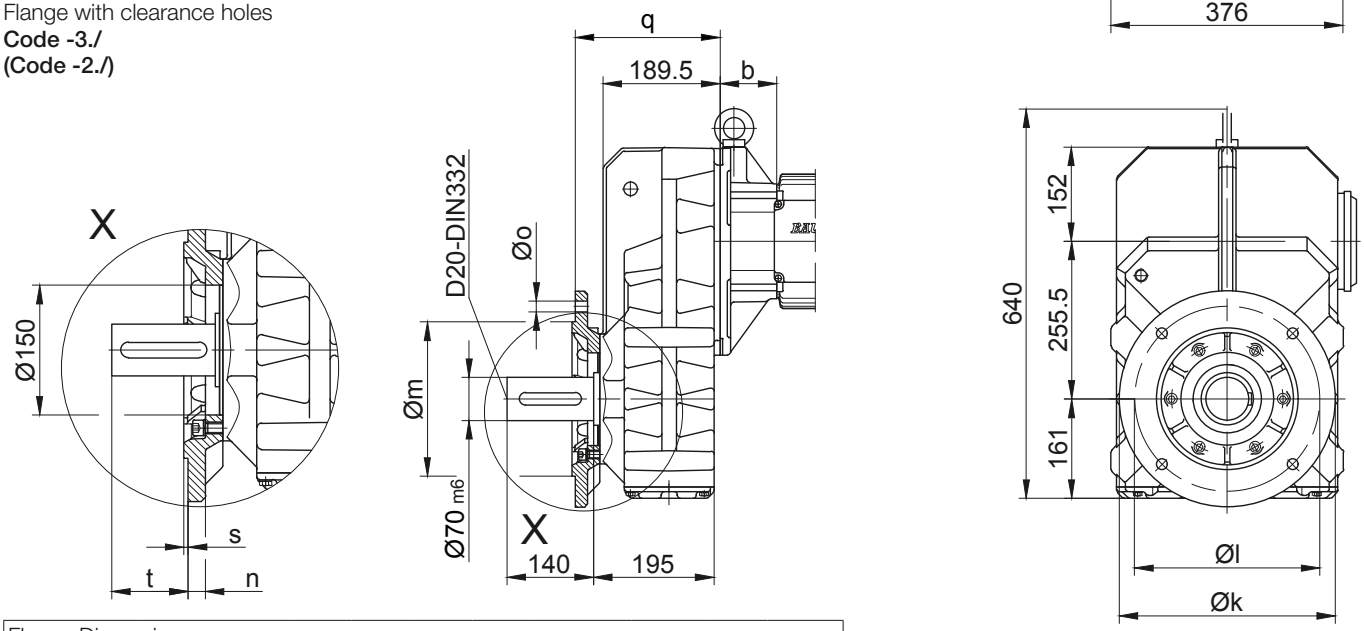

Flange Dimensions									
Type	Design	k	l	m	n	o	q	s	t
BF60..	Code -3./	350	300	250	20	17.5	234.5	5	110.5
BF60..	Code -2./	300	265	230	20	13.5	242.5	4	102.5
Dimensions in millimetres (mm)									

Foot with tapped holes left and right
Code -6.LR/

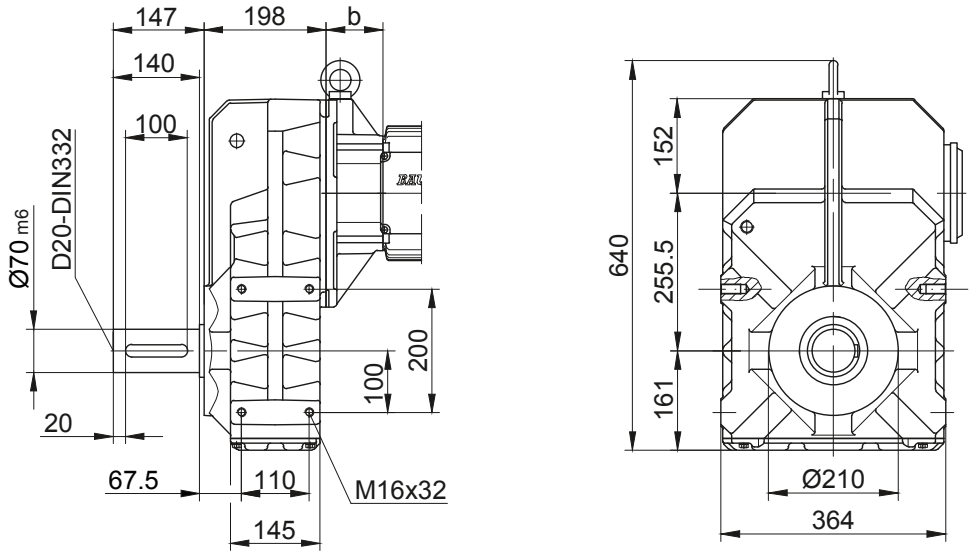

BF-series shaft-mounted geared motors

Dimension - Standard

BF70-BF70Z
with torque arm
Code -0./

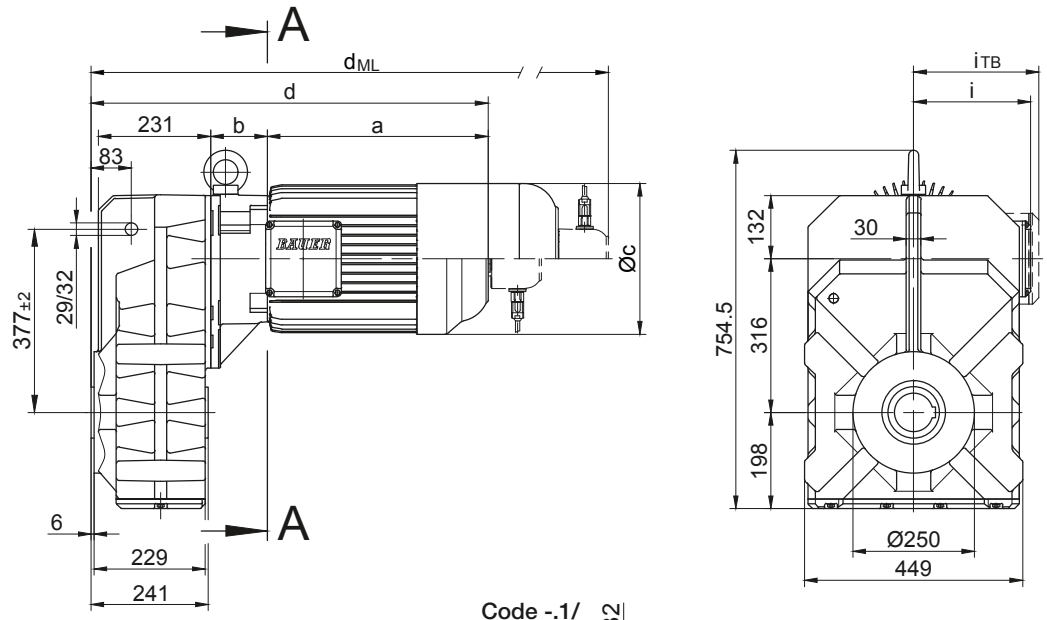

Code -.1/

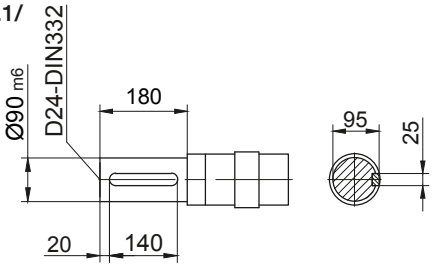

Code -.4/

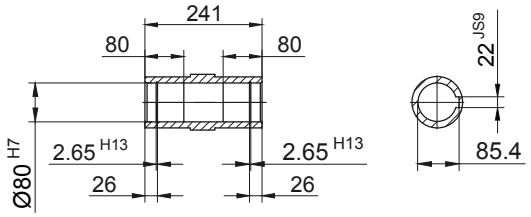

Code -.5/

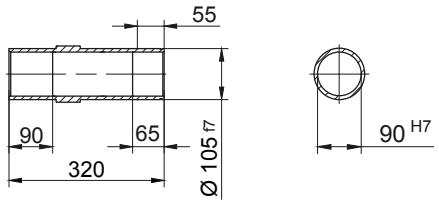

Code -.4/K70

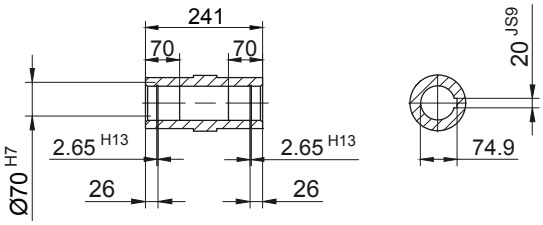

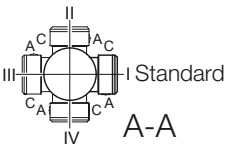

Type	a	b	c	d	i	Design with motor extensions				
						i_{TB}	Brake	Encoder	Brake with Encoder	Back Stop
							d_{ML}	d_{ML}	d_{ML}	d_{ML}
BF70Z-../D..08.A.	199.5	202	156	647.5	116	136.5	713.5	759.5	821	713.5
BF70Z-../D..08.B.	229.5	202	156	677.5	116	136.5	743.5	789.5	850.5	743.5
BF70-../D..09.A.	250.5	83.5	176	580	125.5	157	673	687.5	777	673
BF70Z-../D..09.A.	250.5	216.5	176	713	125.5	157	806	820.5	910	806
BF70-../D..09.B.	308.5	83.5	176	638	125.5	157	731	745	835	731
BF70Z-../D..09.B.	308.5	216.5	176	771	125.5	157	864	878	968	864
BF70-../D..11.A.	319	90	218	655	165	176	753	762.5	855	753
BF70Z-../D..11.A.	319	223	218	788	165	176	886	895.5	988	886
BF70-../D..11.B.	387	90	218	723	165	176	819	830.5	923	819
BF70Z-../D..11.B.	387	223	218	856	165	176	952	963.5	1056	952
BF70-../D..13.A.	393	103	258	742	217	217	853	849	954	850
BF70Z-../D..13.A.	393	236	258	875	217	217	986	982	1087	983
BF70-../D..16.B.	454.5	117	310	817.5	243	243	961	924.5	1064.5	961
BF70Z-../D..16.B.	454.5	250	310	950.5	243	243	1094	1057.5	1197.5	1094
BF70-../D..18.B.	542	139	348	927	288	288	1076.5	1032.5	1180	1076.5
BF70Z-../D..18.B.	542	272	348	1060	288	288	1209.5	1165.5	1313	1209.5
BF70-../D..20.A.	703.5	156	363	1105.5	302	302	1233	1211	1338.5	1105.5
BF70-../D..22.A.	703.5	156	363	1105.5	302	302	1233	1211	1338.5	1105.5

Dimensions in millimetres (mm)

The actual gearbox design can vary from the geometry shown. Generate drive specific 3D and 2D geometries under www.BauerCat.com.

BF70-BF70Z

Flange with tapped holes
Code -7./

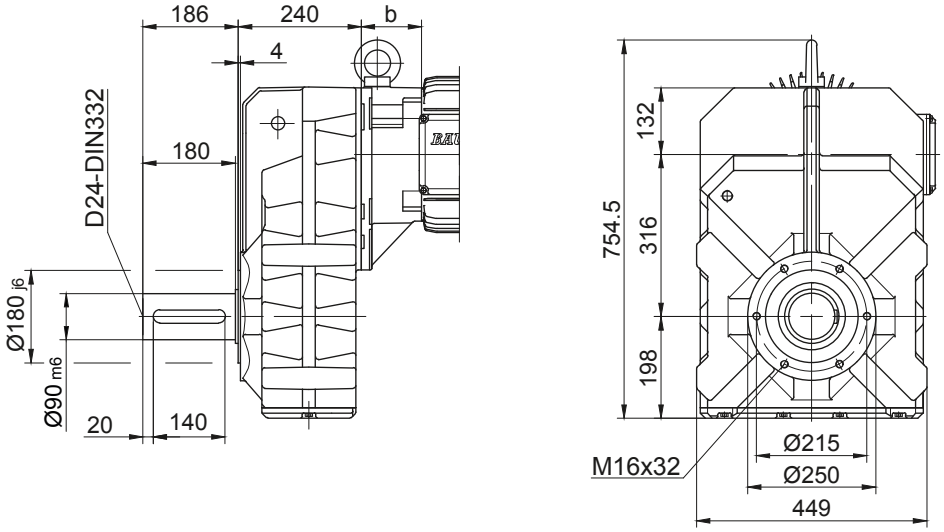

Flange with clearance holes
Code -3./
(Code -2./)
(Code -4./)

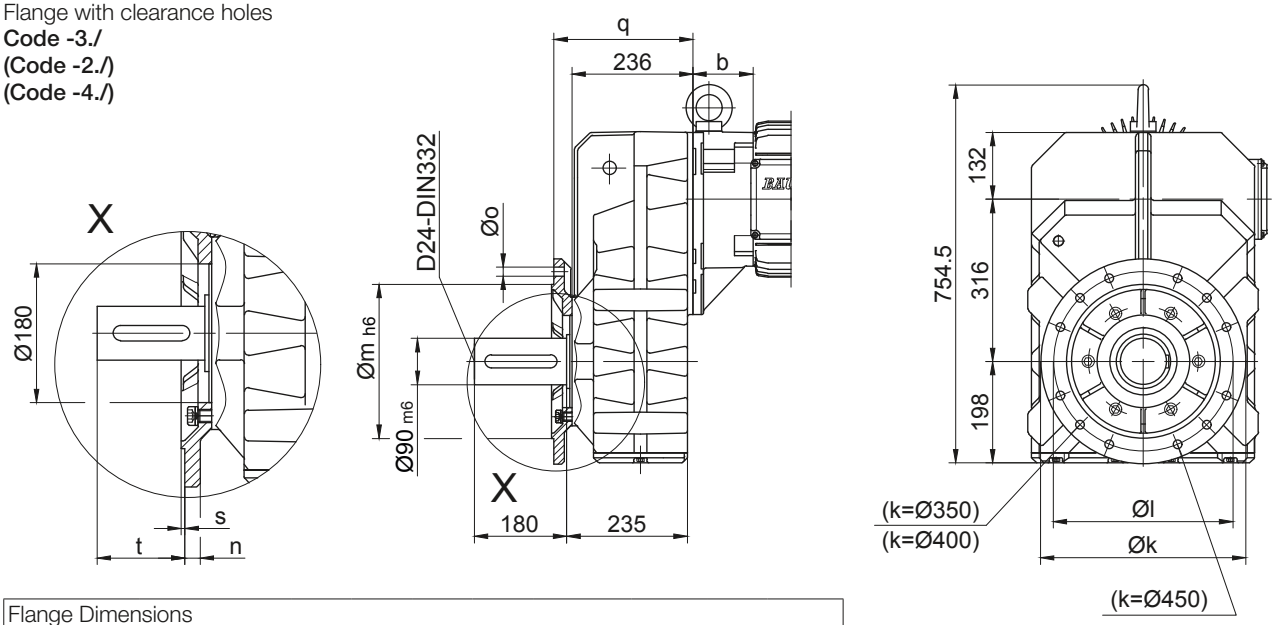

Flange Dimensions									
Type	Design	k	l	m	n	o	q	s	t
BF70..	Code -3./	400	350	300	20	4 x 17.5	271	5	155
BF70..	Code -2./	350	300	250	20	4 x 17.5	271	5	155
BF70..	Code -4./	450	400	350	22	8 x 17.5	281	5	145
Dimensions in millimetres (mm)									

Foot with tapped holes left and right
Code -6.LR/

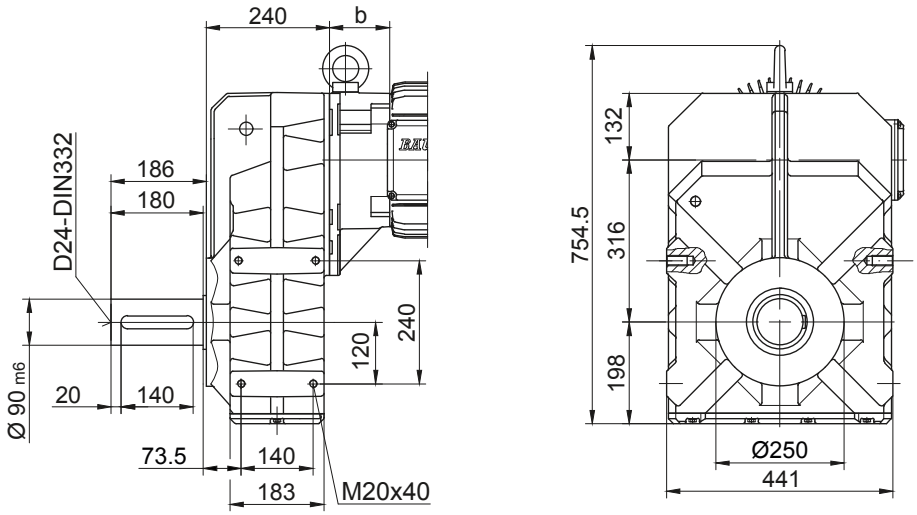

BF-series shaft-mounted geared motors

Dimension - Standard

BF80-BF80Z

with torque arm

Code -0./

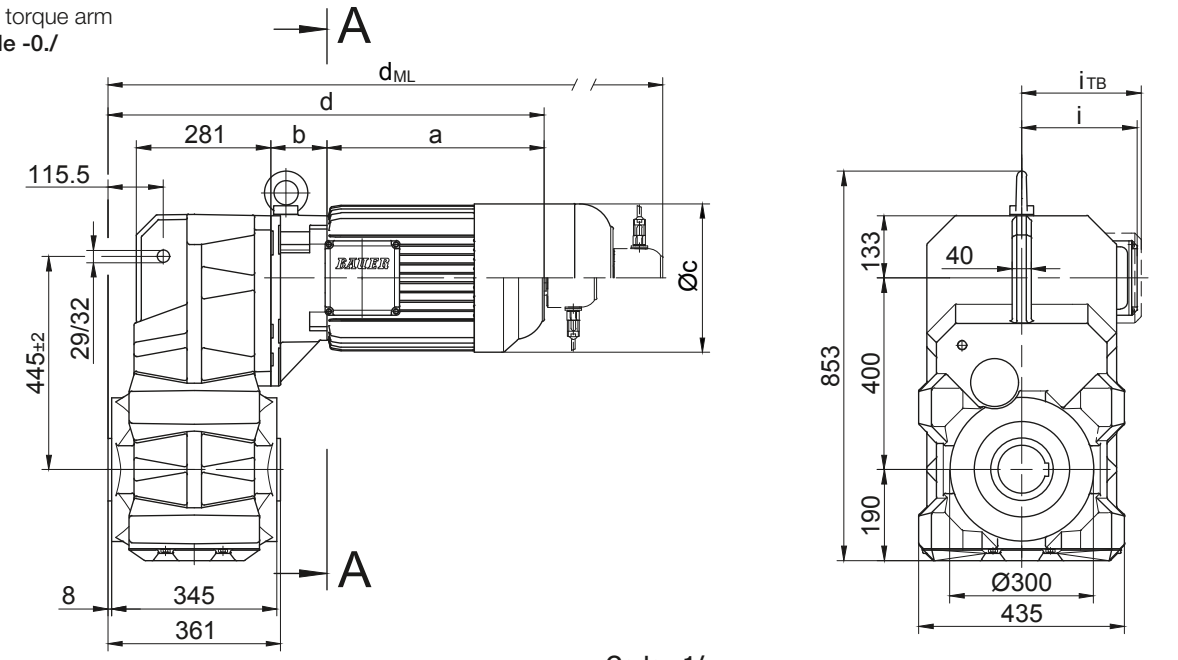

Code -.4/

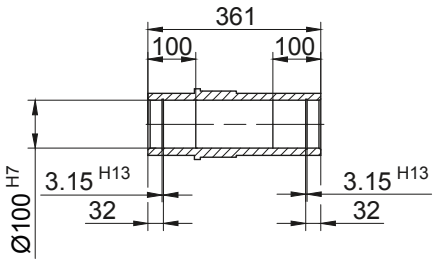

Code -.1/

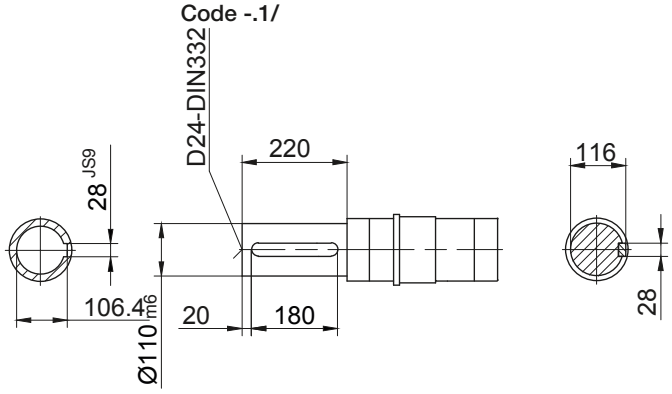

Code -.5/

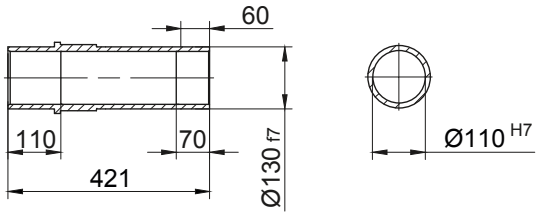

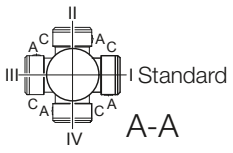

Type	a	b	c	d	i	Design with motor extensions				
						i_{TB}	Brake	Encoder	Brake with Encoder	Back Stop
							d_{ML}	d_{ML}	d_{ML}	d_{ML}
BF80Z-../D..08.A.	199.5	202	156	742	116	136.5	808	854	915.5	808
BF80-../D..09.A.	250.5	83.5	176	674.5	125.5	157	767.5	782	871.5	767.5
BF80Z-../D..09.A.	250.5	216.5	176	807.5	125.5	157	900.5	915	1004.5	900.5
BF80-../D..09.B.	308.5	83.5	176	732.5	125.5	157	825.5	839.5	929.5	825.5
BF80Z-../D..09.B.	308.5	216.5	176	865.5	125.5	157	958.5	972.5	1062.5	958.5
BF80-../D..11.A.	319	90	218	749.5	165	176	847.5	857	949.5	847.5
BF80Z-../D..11.A.	319	223	218	882.5	165	176	980.5	990	1082.5	980.5
BF80-../D..11.B.	387	90	218	817.5	165	176	913.5	925	1017.5	913.5
BF80Z-../D..11.B.	387	223	218	950.5	165	176	1046.5	1058	1150.5	1046.5
BF80-../D..13.A.	393	103	258	836.5	217	217	947.5	943.5	1048.5	944.5
BF80Z-../D..13.A.	393	236	258	969.5	217	217	1080.5	1076.5	1181.5	1077.5
BF80-../D..16.B.	454.5	117	310	912	243	243	1055.5	1019	1159	1055.5
BF80Z-../D..16.B.	454.5	250	310	1045	243	243	1188.5	1152	1292	1188.5
BF80-../D..18.B.	542	139	348	1021.5	288	288	1171	1127	1274.5	1171
BF80Z-../D..18.B.	542	272	348	1154.5	288	288	1304	1260	1407.5	1304
BF80-../D..20.A.	703.5	156	363	1200	302	302	1327.5	1305.5	1433	1200
BF80-../D..22.A.	703.5	156	363	1200	302	302	1327.5	1305.5	1433	1200

Dimensions in millimetres (mm)

The actual gearbox design can vary from the geometry shown. Generate drive specific 3D and 2D geometries under www.BauerCat.com.

BF80-BF80Z

Flange with tapped holes
Code -7./

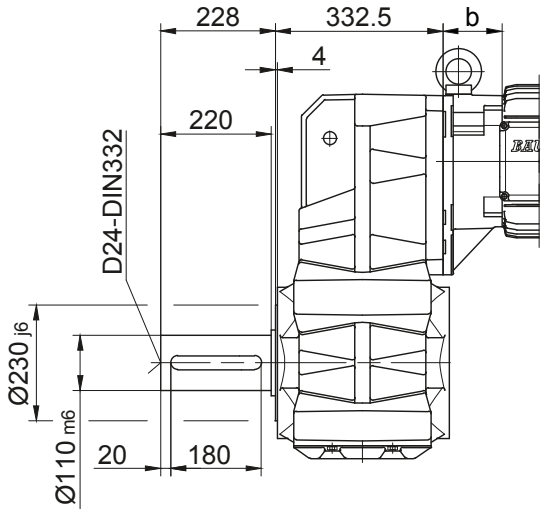

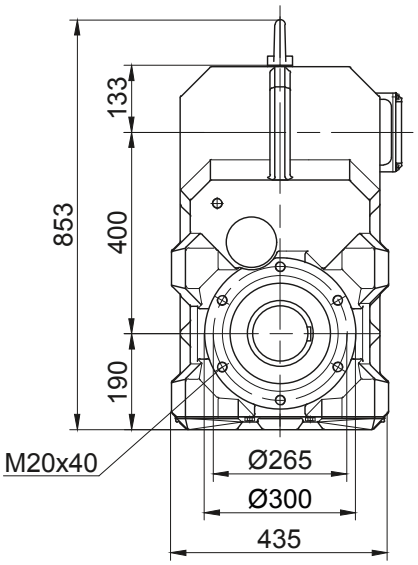

Flange with clearance holes
Code -3./
(Code -4./)

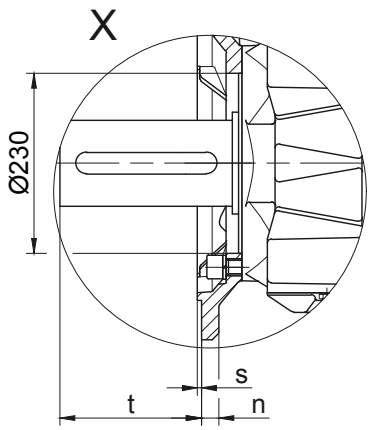

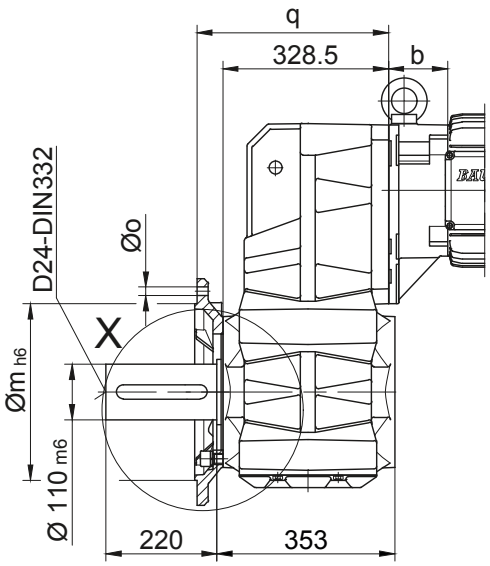

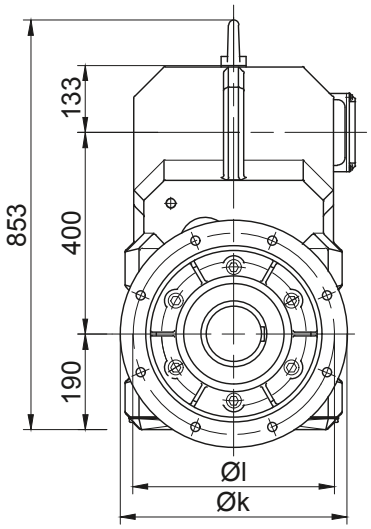

Flange Dimensions									
Type	Design	k	l	m	n	o	q	s	t
BF80..	Code -3./	450	400	350	22	17.5	383.5	5	177
BF80..	Code -4./	550	500	450	22	17.5	388.5	5	172
Dimensions in millimetres (mm)									

Foot with clearance holes left and right
Code -1.LR/

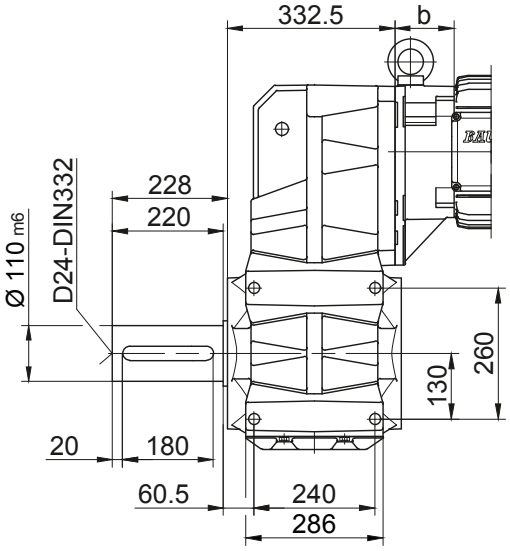

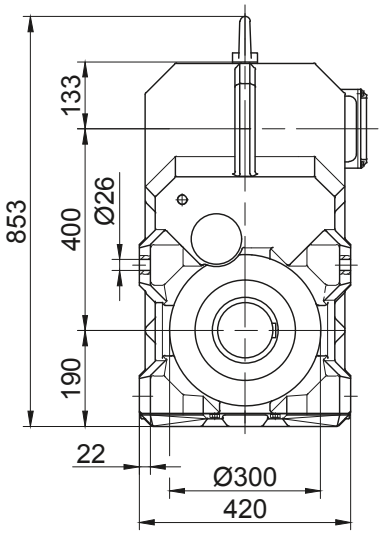

BF-series shaft-mounted geared motors

Dimension - Standard

BF90-BF90Z
with torque arm
Code -0./

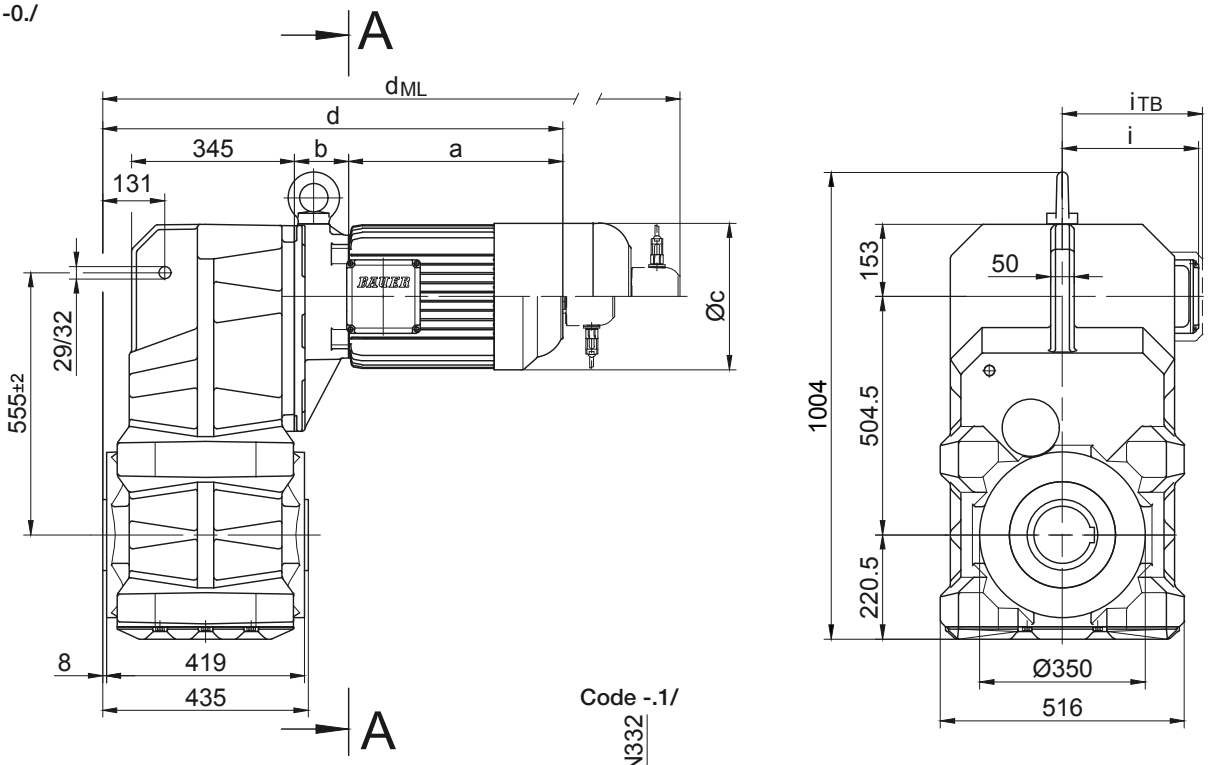

Code -.1/

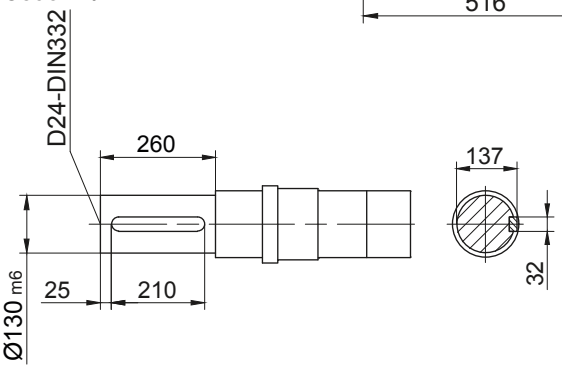

Code -.4/

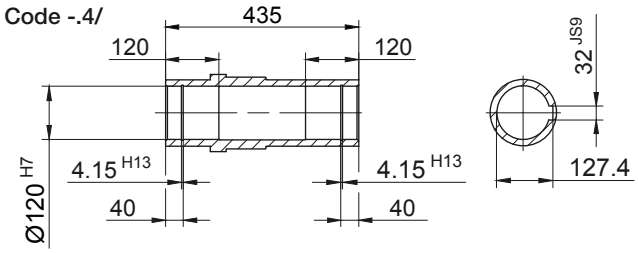

Code -.5/

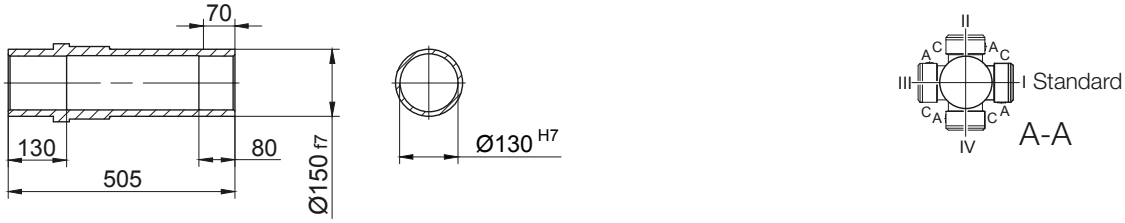

Type	a	b	c	d	i	Design with motor extensions				
						i_{TB}	Brake	Encoder	Brake with Encoder	Back Stop
							d_{ML}	d_{ML}	d_{ML}	d_{ML}
BF90Z-../D..09.A.	250.5	252.5	176	909	125.5	157	1002	1016.5	1106	1002
BF90Z-../D..09.B.	308.5	252.5	176	967	125.5	157	1060	1074	1164	1060
BF90-../D..11.A.	319	87	218	812	165	176	910	919.5	1012	910
BF90Z-../D..11.A.	319	259	218	984	165	176	1082	1091.5	1184	1082
BF90-../D..11.B.	387	87	218	880	165	176	976	987.5	1080	976
BF90Z-../D..11.B.	387	259	218	1052	165	176	1148	1159.5	1252	1148
BF90-../D..13.A.	393	100	258	899	217	217	1010	1006	1111	1007
BF90Z-../D..13.A.	393	272	258	1071	217	217	1182	1178	1283	1179
BF90-../D..16.B.	454.5	114	310	974.5	243	243	1118	1081.5	1221.5	1118
BF90Z-../D..16.B.	454.5	286	310	1146.5	243	243	1290	1253.5	1393.5	1290
BF90-../D..18.B.	542	136	348	1084	288	288	1233.5	1189.5	1337	1233.5
BF90Z-../D..18.B.	542	308	348	1256	288	288	1405.5	1361.5	1509	1405.5
BF90-../D..20.A.	703.5	153	363	1262.5	302	302	1390	1368	1495.5	1262.5
BF90-../D..22.A.	703.5	153	363	1262.5	302	302	1390	1368	1495.5	1262.5

Dimensions in millimetres (mm)

The actual gearbox design can vary from the geometry shown. Generate drive specific 3D and 2D geometries under www.BauerCat.com.

BF90-BF90Z

Flange with tapped holes
Code -7./

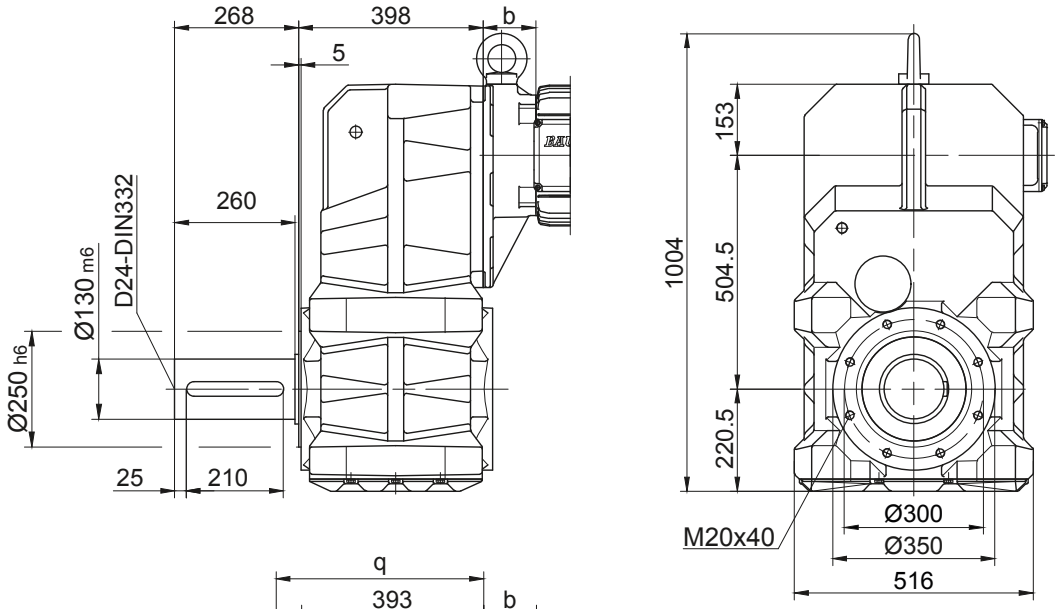

Flange with clearance holes
Code -3./
(Code -4./)

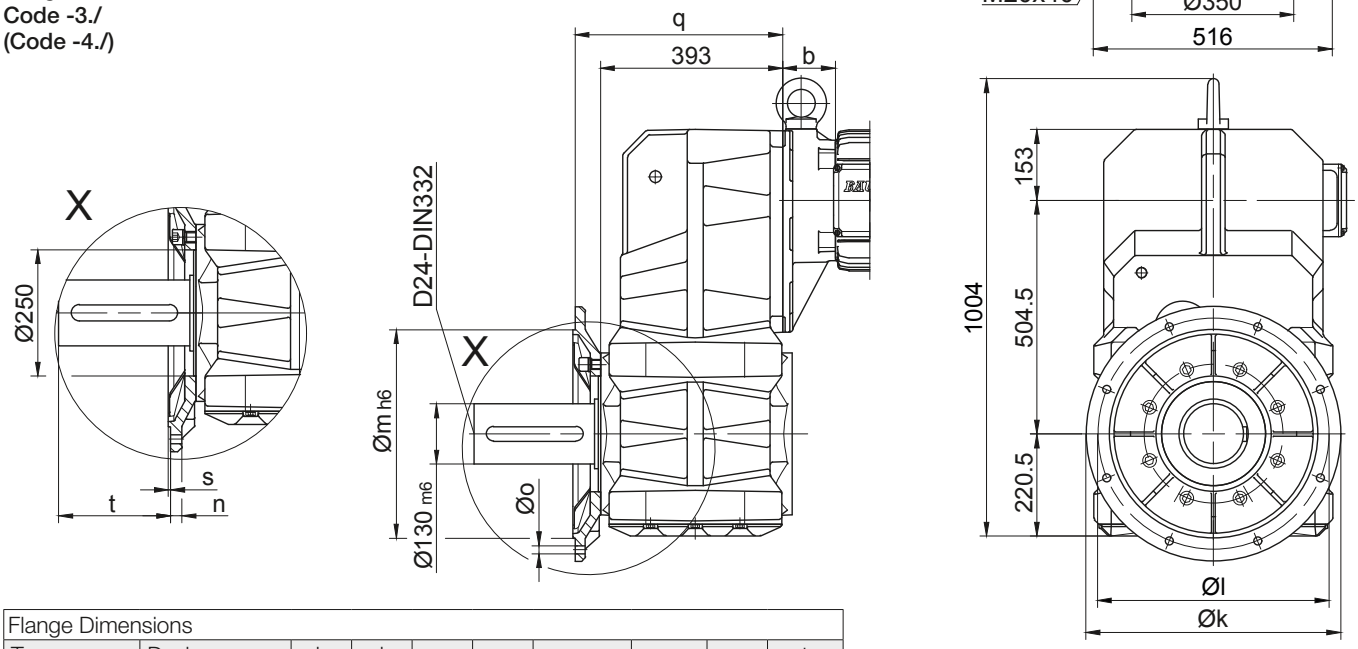

Flange Dimensions									
Type	Design	k	l	m	n	o	q	s	t
BF90..	Code -3./	550	500	450	22	17.5	448	5	218
BF90..	Code -4./	660	600	550	25	22	442	6	224
Dimensions in millimetres (mm)									

Foot with clearance holes left and right
Code -1.LR/

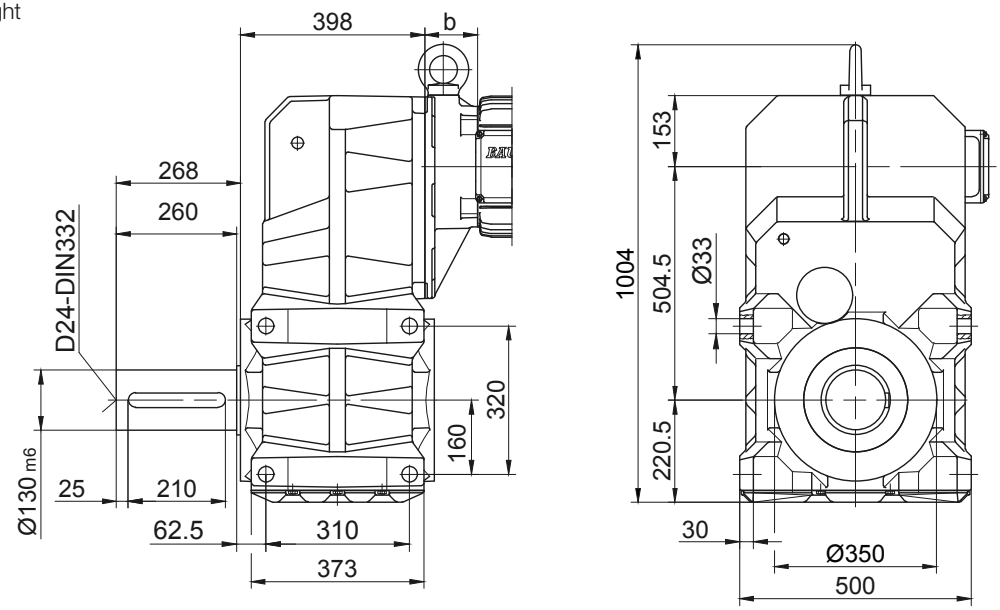

BF-series shaft-mounted geared motors

Dimension - Tandem Gearbox

BF10G06

with torque arm

Code -0./

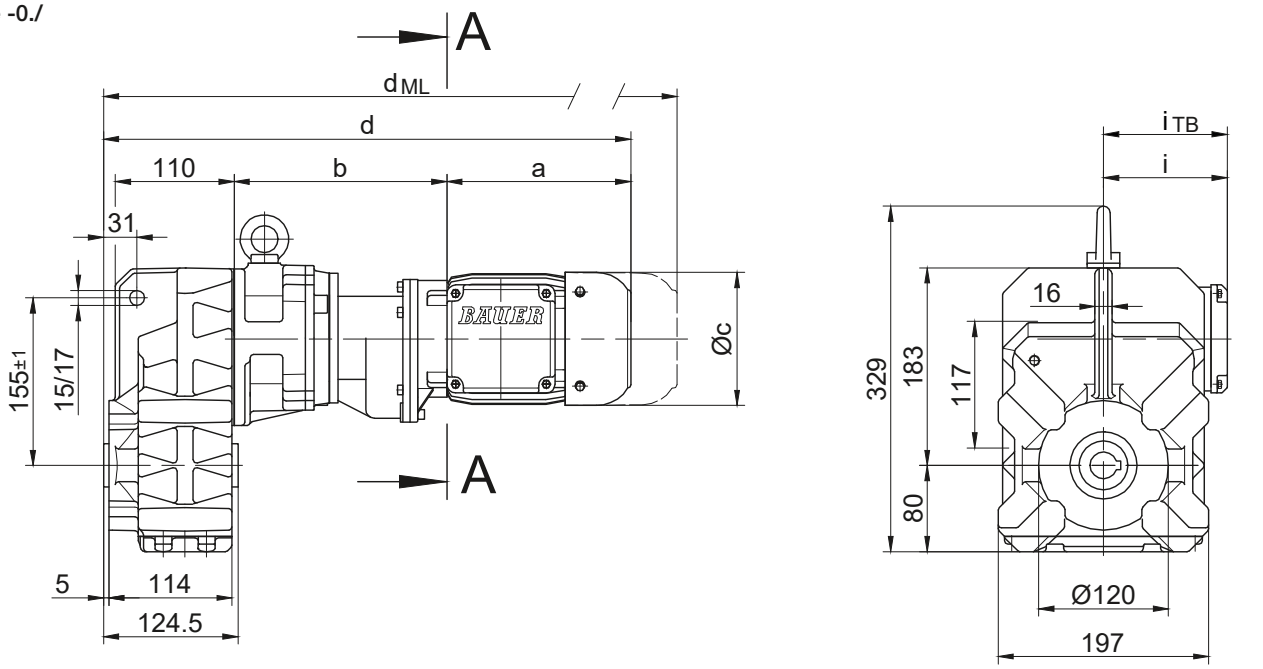

Code -.1/

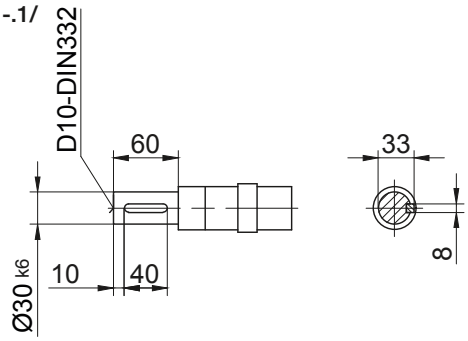

Code -.4/

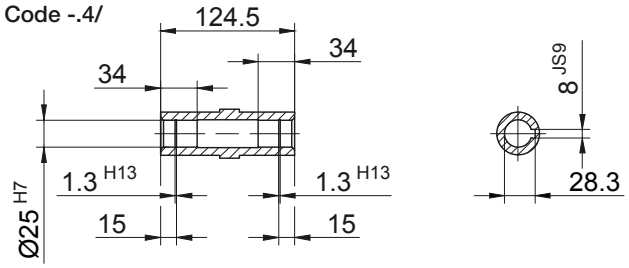

Code -.5/

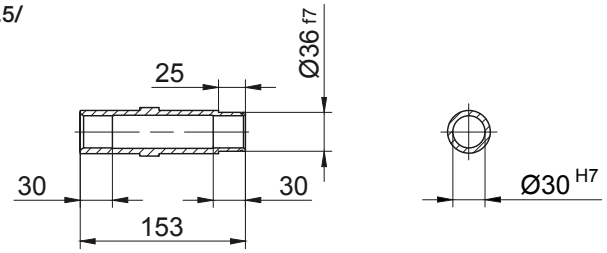

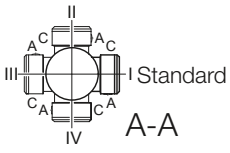

Type	a	b	c	d	i	Design with motor extensions				
						i_{TB}	Brake	Encoder	Brake with Encoder	Back Stop
							d_{ML}	d_{ML}	d_{ML}	d_{ML}
BF10G06-../D04.A.	142.5	195	110.5	458.5	90	112	502	546	589.5	-
BF10G06-../D..05.A.	170.5	197	123	488.5	101.5	117	530.5	591	628.5	-
BF10G06-../D..06.A.	170.5	197	123	488.5	101.5	119	530.5	591	628.5	-
BF10G06-../D..07.A.	190.5	197	123	508.5	101.5	119	550.5	611	648.5	-
BF10G06-../D..08.A.	199.5	241	156	561.5	116	136.5	627.5	673.5	735	627.5
BF10G06-../D..08.B.	229.5	241	156	591.5	116	136.5	657.5	703.5	764.5	657.5

Dimensions in millimetres (mm)

The actual gearbox design can vary from the geometry shown. Generate drive specific 3D and 2D geometries under www.BauerCat.com.

BF10G06

Flange with tapped holes
Code -7./

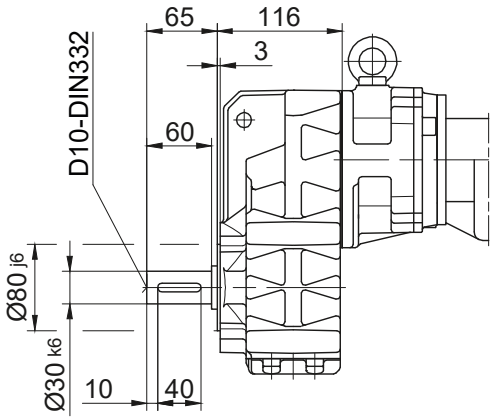

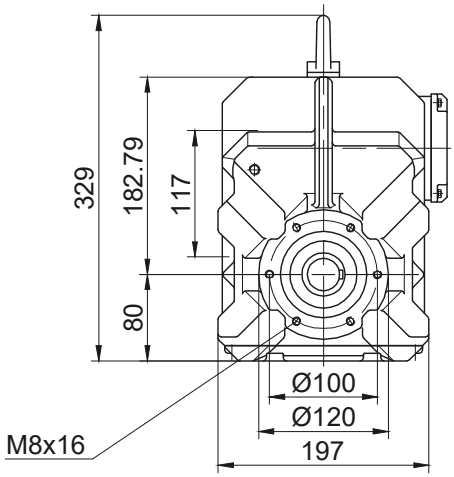

Flange with clearance holes
Code -3./
(Code -2./)

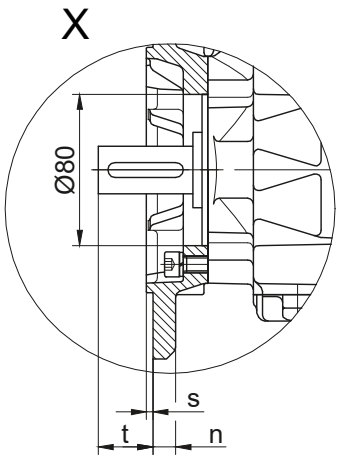

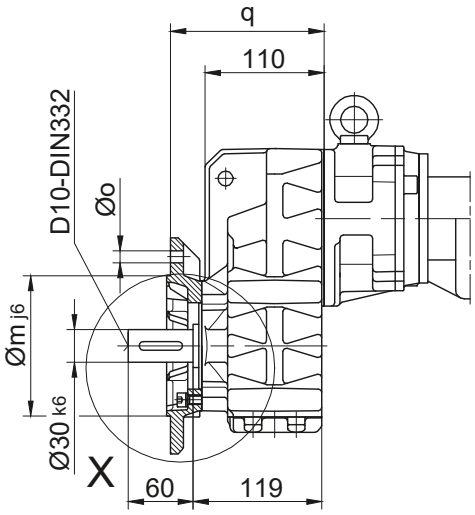

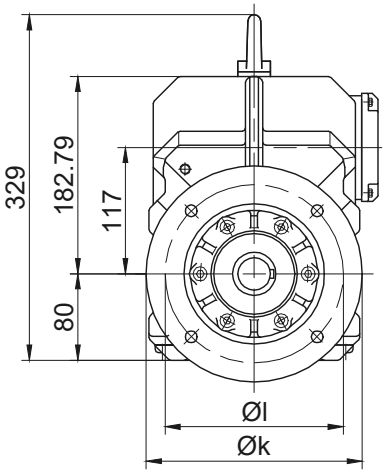

Flange Dimensions									
Type	Design	k	l	m	n	o	q	s	t
BF10..	Code -3./	200	165	130	12	11	142	3.5	39
BF10..	Code -2./	160	130	110	10	9	135	3.5	46
Dimensions in millimetres (mm)									

Foot with tapped holes left and right
Code -6.LR/

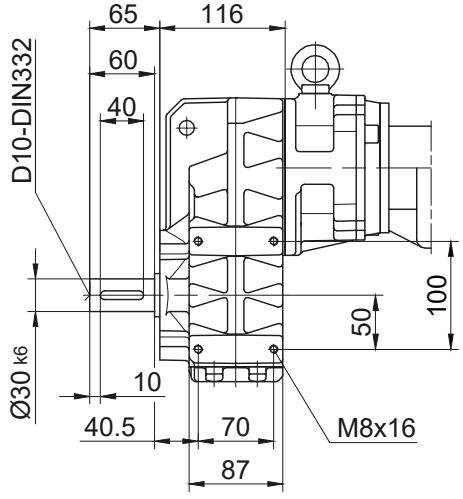

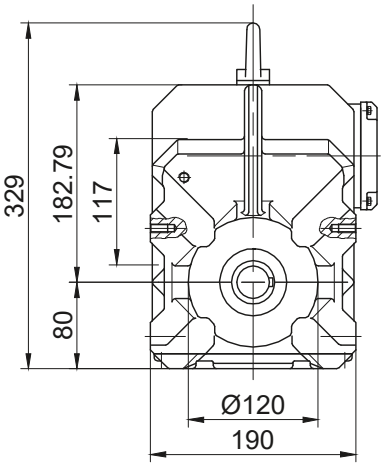

BF-series shaft-mounted geared motors

Dimension - Tandem Gearbox

BF20G06

with torque arm

Code -0./

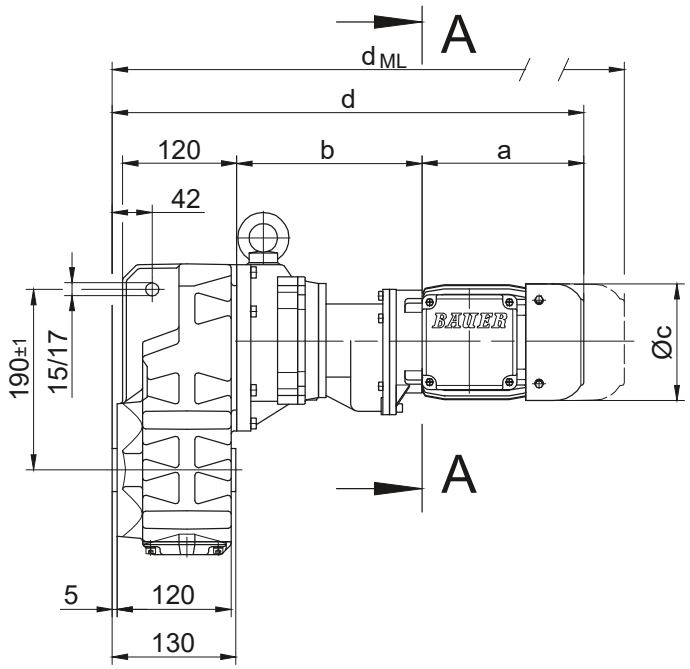

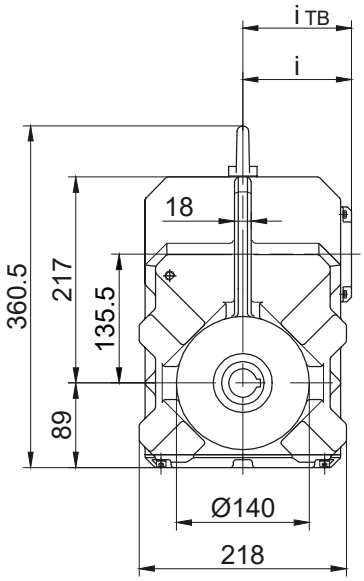

Code -.1/

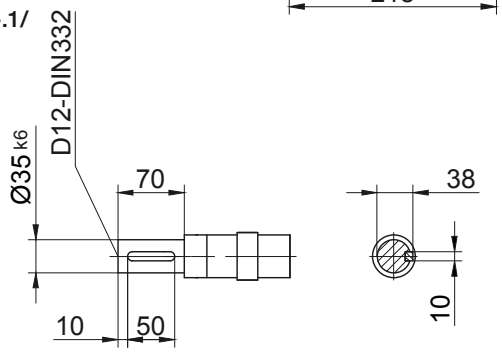

Code -.4/

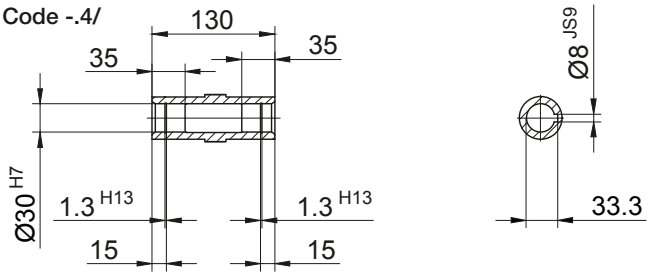

Code -.5/

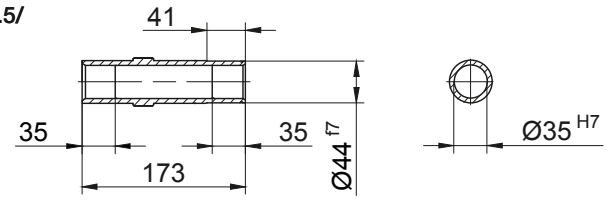

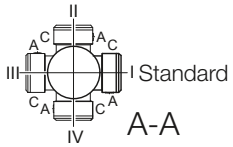

Type	a	b	c	d	i	Design with motor extensions				
						i_{TB}	Brake	Encoder	Brake with Encoder	Back Stop
							d_{ML}	d_{ML}	d_{ML}	d_{ML}
BF20G06-../D04.A.	142.5	193	110.5	466.5	90	112	510	554	597.5	-
BF20G06-../D..05.A.	170.5	195	123	496.5	101.5	117	538.5	599	636.5	-
BF20G06-../D..06.A.	170.5	195	123	496.5	101.5	119	538.5	599	636.5	-
BF20G06-../D..07.A.	190.5	195	123	516.5	101.5	119	558.5	619	656.5	-
BF20G06-../D..08.A.	199.5	239	156	569.5	116	136.5	635.5	681.5	743	635.5
BF20G06-../D..08.B.	229.5	239	156	599.5	116	136.5	665.5	711.5	772.5	665.5

Dimensions in millimetres (mm)

The actual gearbox design can vary from the geometry shown. Generate drive specific 3D and 2D geometries under www.BauerCat.com.

BF20G06

Flange with tapped holes
Code -7./

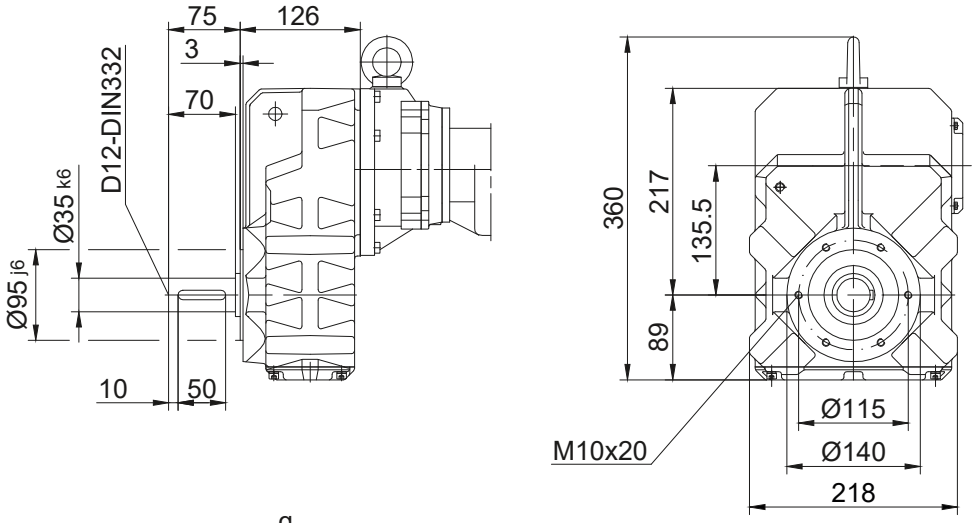

Flange with clearance holes
Code -3./
(Code -2./)

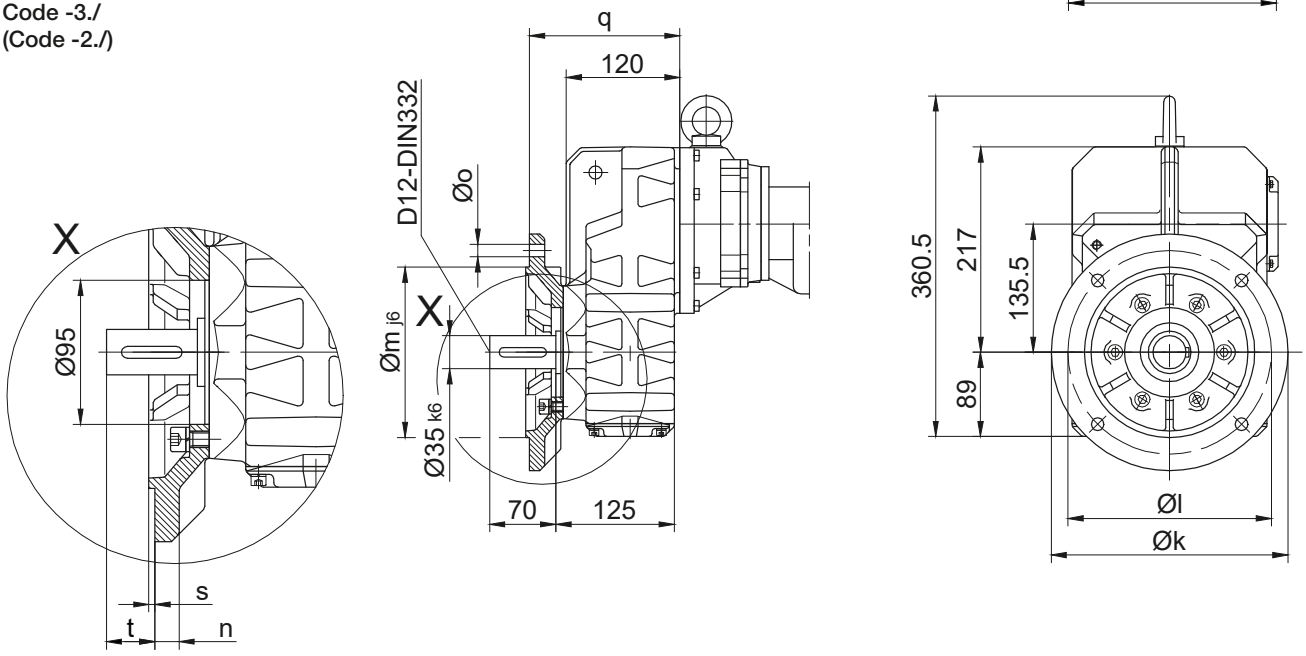

Flange Dimensions									
Type	Design	k	l	m	n	o	q	s	t
BF20..	Code -3./	250	215	180	16	13.5	159	4	42
BF20..	Code -2./	200	165	130	12	11	150	3.5	51
Dimensions in millimetres (mm)									

Foot with tapped holes left and right
Code -6.LR/

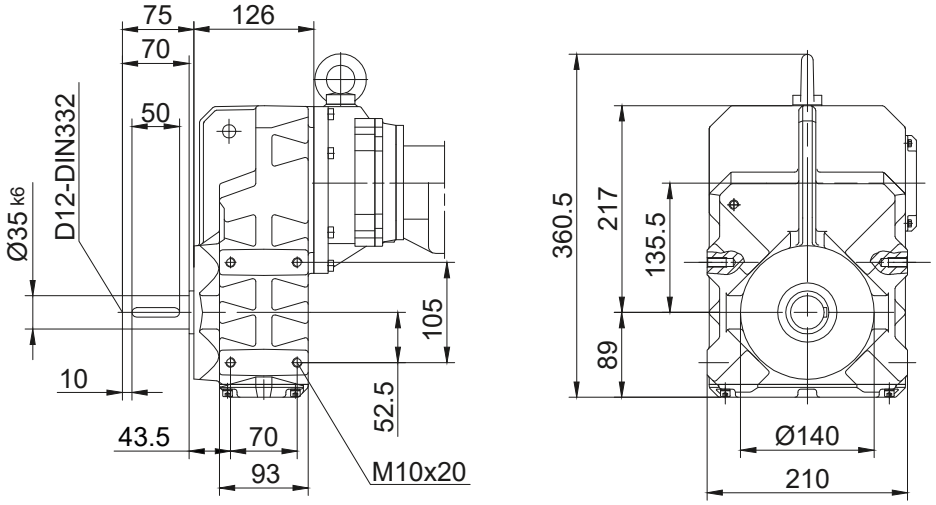

BF-series shaft-mounted geared motors

Dimension - Tandem Gearbox

BF30G06

with torque arm

Code -0./

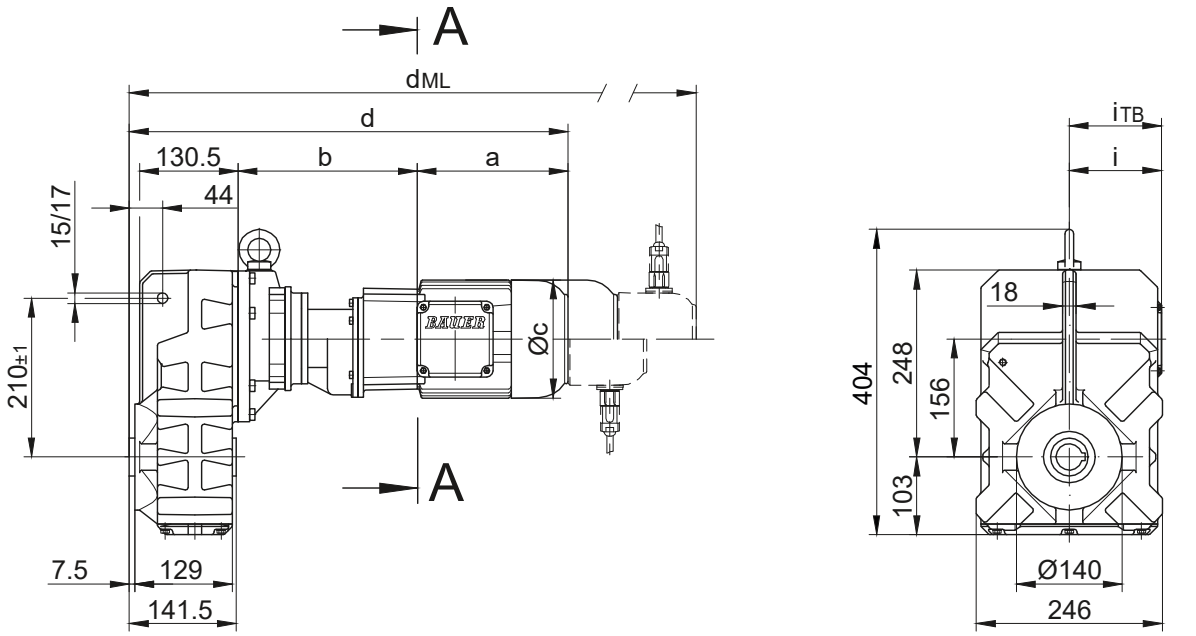

Code -.1/

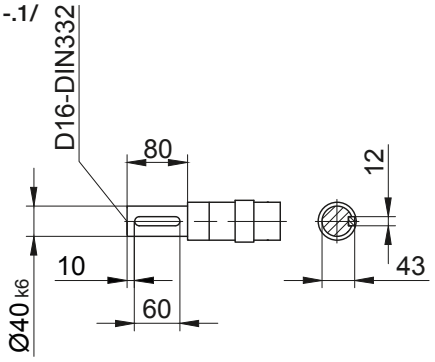

Code -.4/

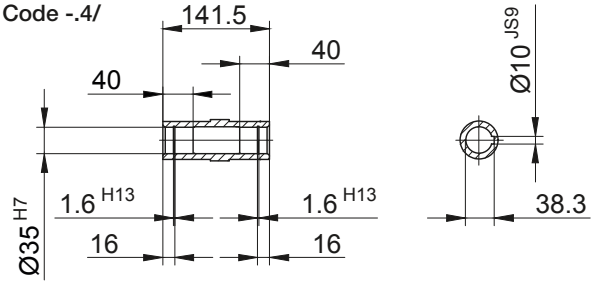

Code -.5/

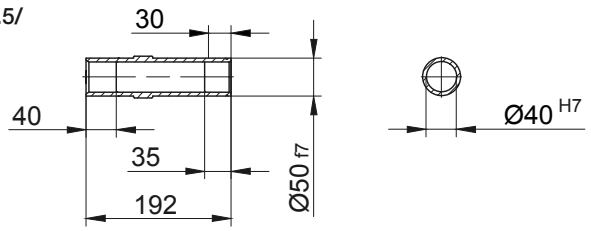

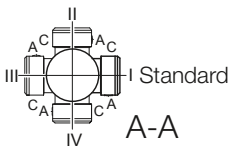

Type	a	b	c	d	i	Design with motor extensions				
						i_{TB}	Brake	Encoder	Brake with Encoder	Back Stop
							d_{ML}	d_{ML}	d_{ML}	d_{ML}
BF30G06-../D04.A.	142.5	191	110.5	477.5	90	112	521	565	608.5	-
BF30G06-../D..05.A.	170.5	193	123	507.5	101.5	117	549.5	610	647.5	-
BF30G06-../D..06.A.	170.5	193	123	507.5	101.5	119	549.5	610	647.5	-
BF30G06-../D..07.A.	190.5	193	123	527.5	101.5	119	569.5	630	667.5	-
BF30G06-../D..08.A.	199.5	237	156	580.5	116	136.5	646.5	692.5	754	646.5
BF30G06-../D..08.B.	229.5	237	156	610.5	116	136.5	676.5	722.5	783.5	676.5

Dimensions in millimetres (mm)

The actual gearbox design can vary from the geometry shown. Generate drive specific 3D and 2D geometries under www.BauerCat.com.

BF30G06

Flange with tapped holes
Code -7./

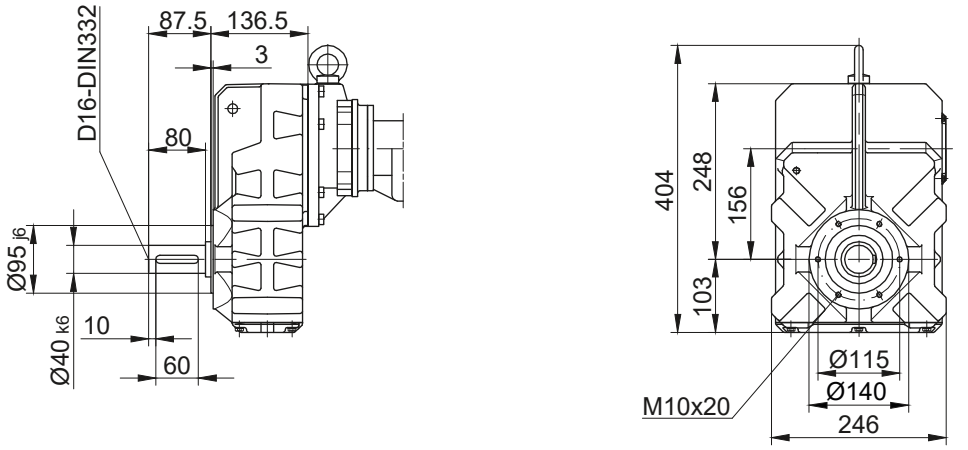

Flange with clearance holes
Code -3./
(Code -2./)

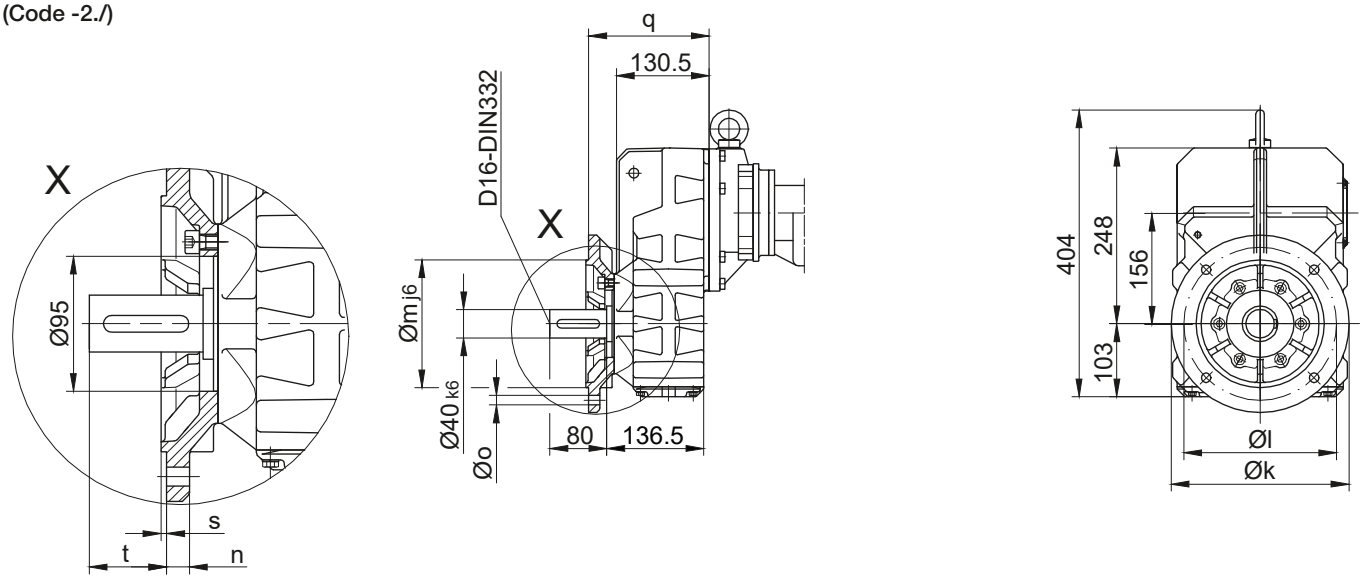

Flange Dimensions									
Type	Design	k	l	m	n	o	q	s	t
BF30..	Code -3./	250	215	180	16	13.5	169.5	4	54.5
BF30..	Code -2./	200	165	130	12	11	160.5	3.5	63.5
Dimensions in millimetres (mm)									

Foot with tapped holes left and right
Code -6.LR/

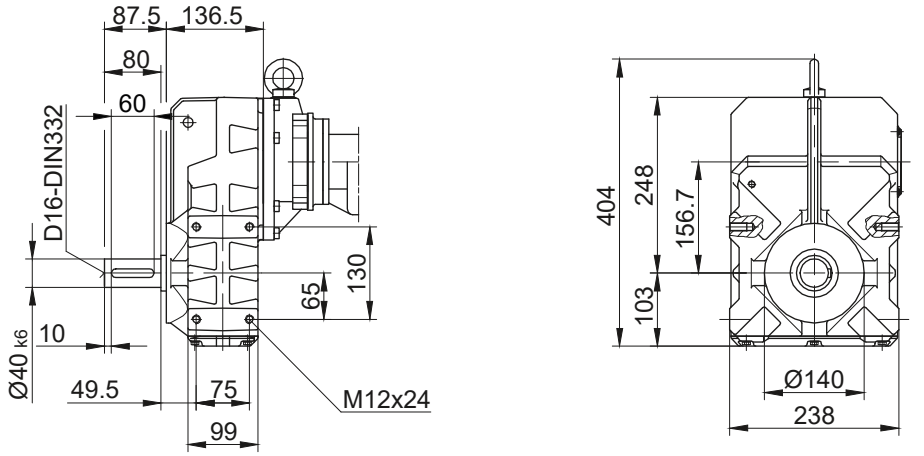

BF-series shaft-mounted geared motors

Dimension - Tandem Gearbox

BF40G10

with torque arm

Code -0./

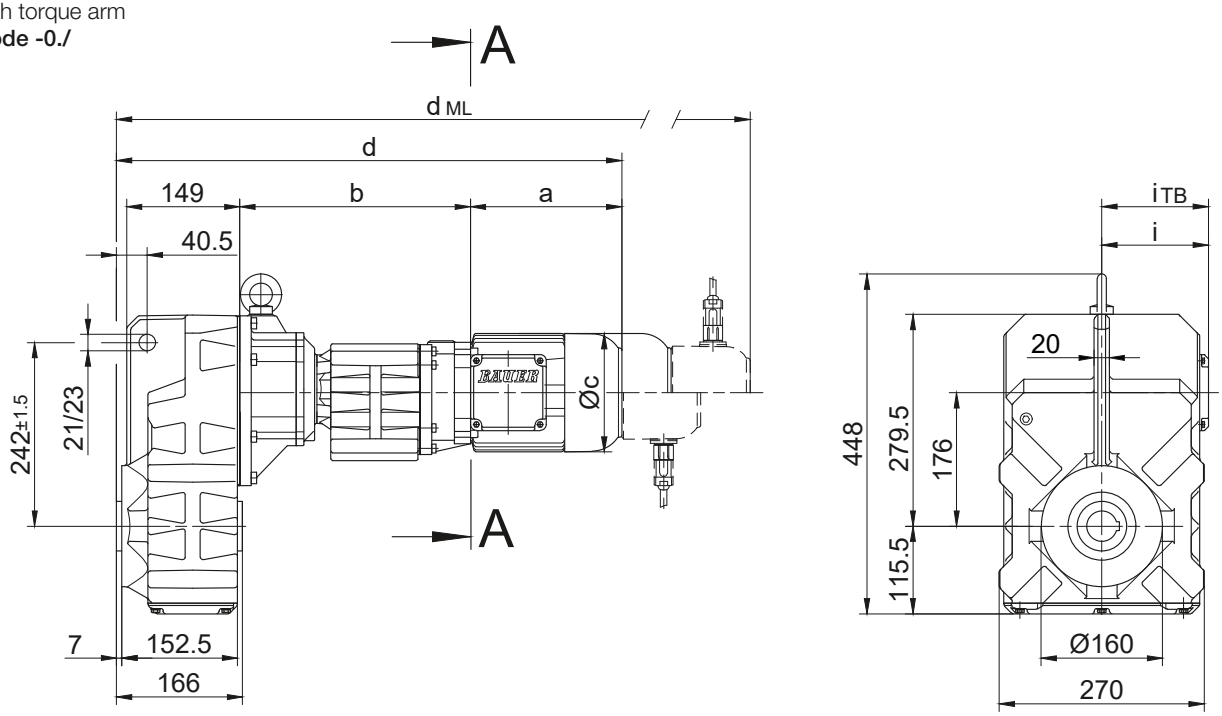

Code -.4/

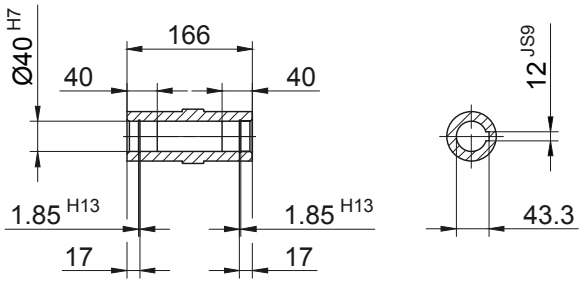

Code -.1/

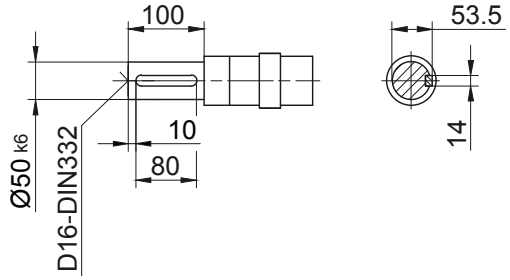

Code -.5/

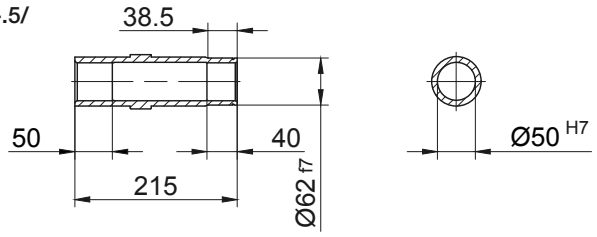

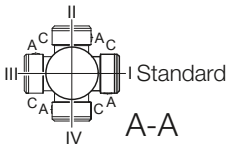

Type	a	b	c	d	i	Design with motor extensions				
						i_{TB}	Brake	Encoder	Brake with Encoder	Back Stop
							d_{ML}	d_{ML}	d_{ML}	d_{ML}
BF40G10-../D..05.A.	170.5	300	123	633	101.5	117	675	735.5	773	-
BF40G10-../D..06.A.	170.5	300	123	633	101.5	119	675	735.5	773	-
BF40G10-../D..07.A.	190.5	300	123	653	101.5	119	695	755.5	793	-
BF40G10-../D..08.A.	199.5	304	156	666	116	136.5	732	778	839.5	732
BF40G10-../D..08.B.	229.5	304	156	696	116	136.5	762	808	869	762
BF40G10-../D..09.A.	250.5	318.5	176	731.5	125.5	157	824.5	839	928.5	824.5
BF40G10-../D..09.B.	308.5	318.5	176	789.5	125.5	157	882.5	896.5	986.5	882.5

Dimensions in millimetres (mm)

The actual gearbox design can vary from the geometry shown. Generate drive specific 3D and 2D geometries under www.BauerCat.com.

BF40G10

Flange with tapped holes
Code -7./

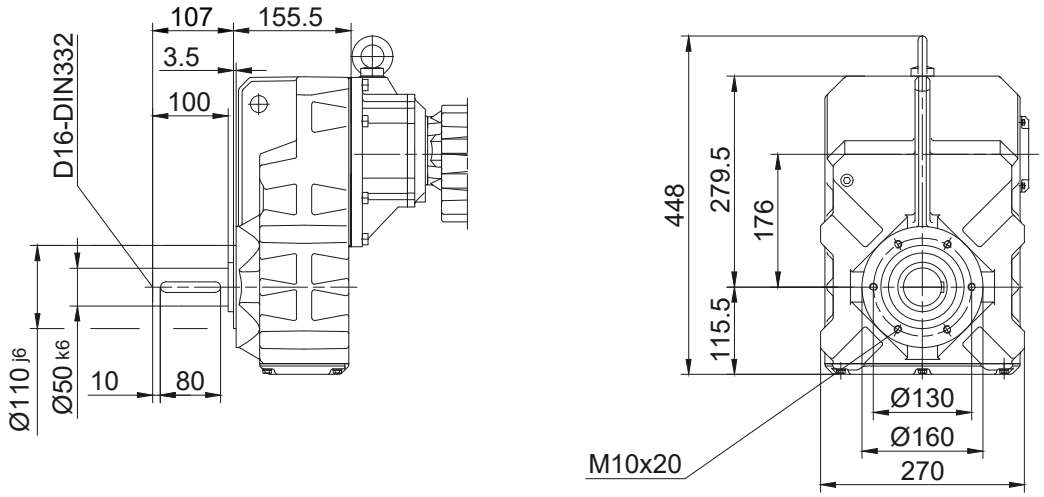

Flange with clearance holes
Code -3./
(Code -4./)

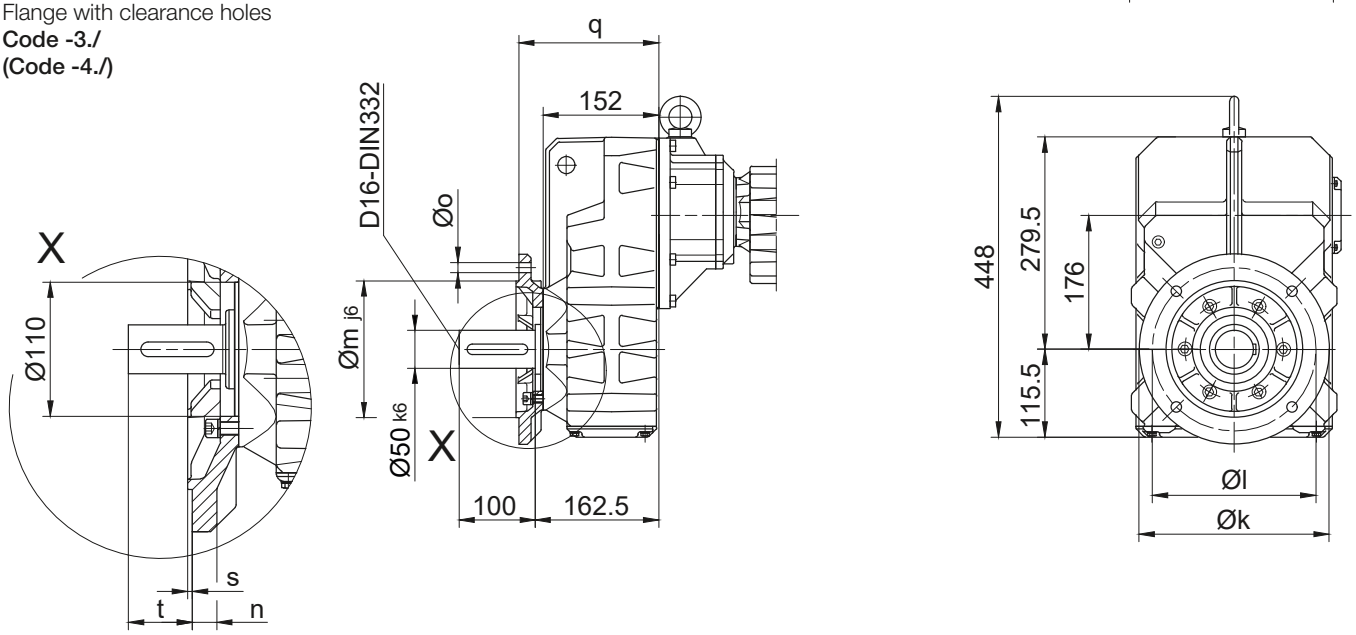

Flange Dimensions									
Type	Design	k	l	m	n	o	q	s	t
BF40..	Code -3./	250	215	180	16	13.5	184	4	78.5
BF40..	Code -4./	300	265	230	20	13.5	190	4	72.5
Dimensions in millimetres (mm)									

Foot with tapped holes left and right
Code -6.LR/

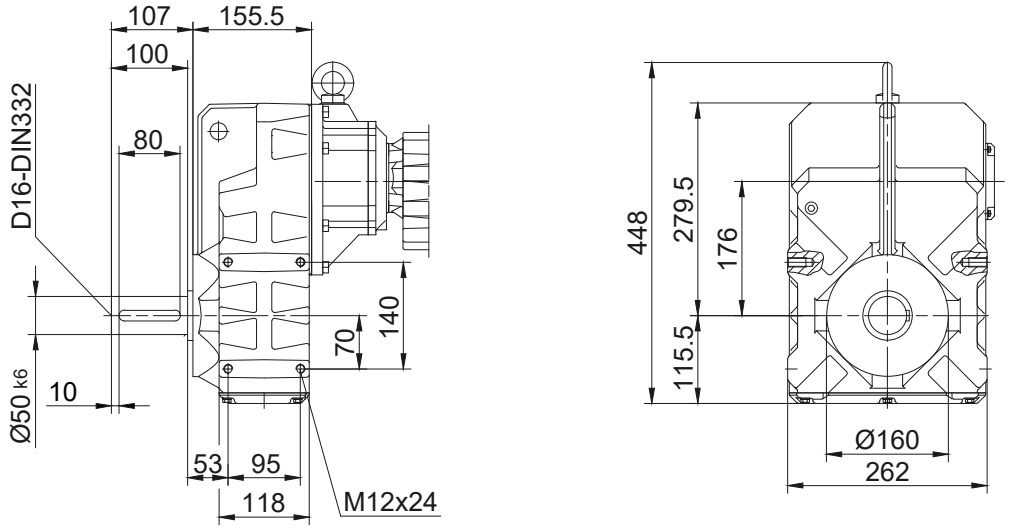

BF-series shaft-mounted geared motors

Dimension - Tandem Gearbox

BF50G10

with torque arm

Code -0./

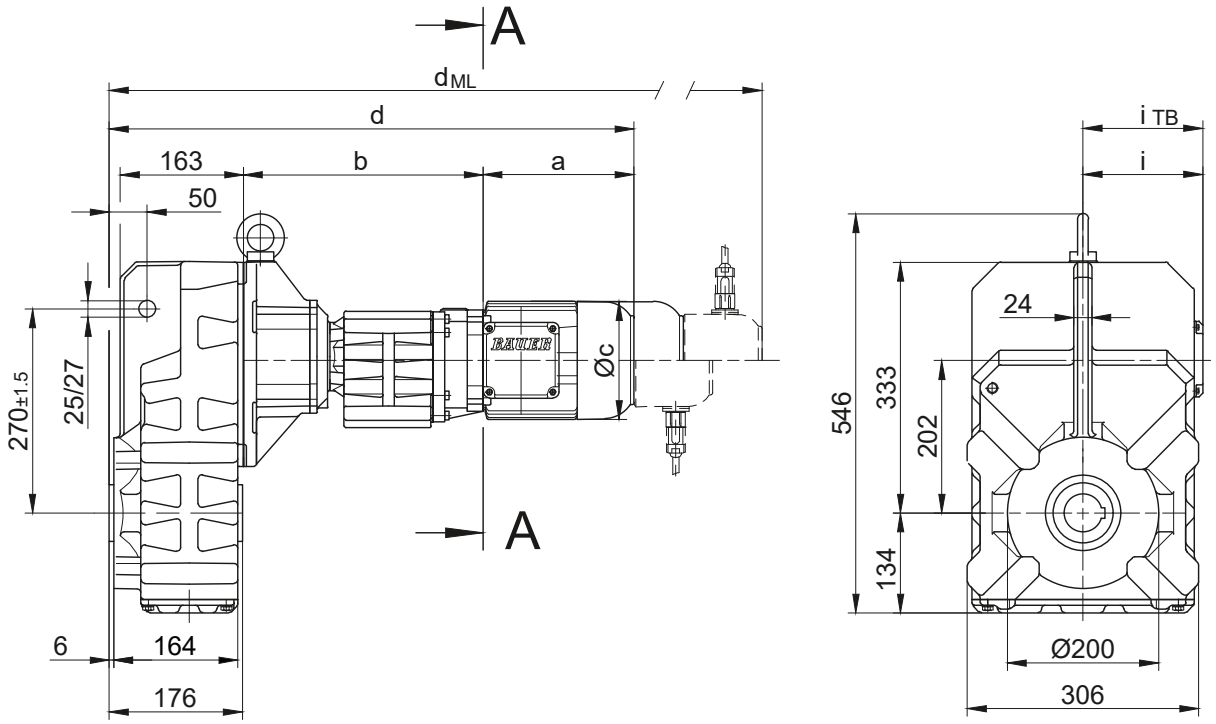

Code -.1/

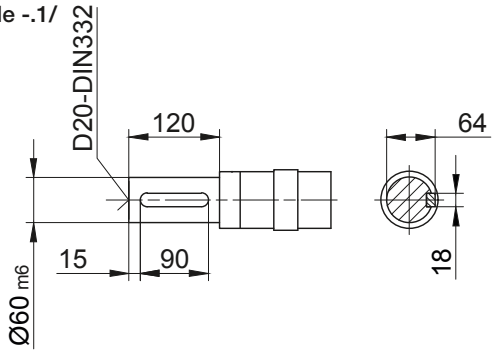

Code -.4/

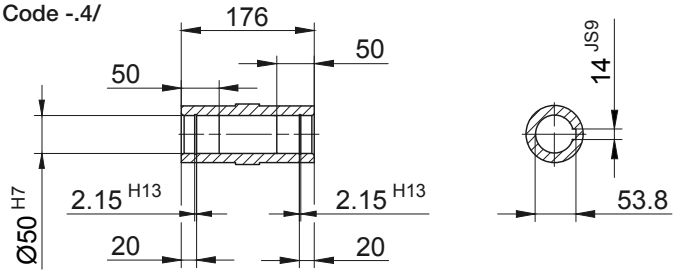

Code -.5/

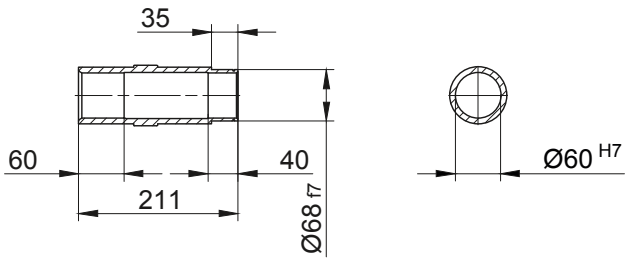

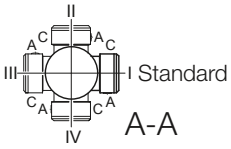

Type	a	b	c	d	i	Design with motor extensions				
						i_{TB}	Brake	Encoder	Brake with Encoder	Back Stop
							d_{ML}	d_{ML}	d_{ML}	d_{ML}
BF50G10-../D..05.A.	170.5	313	123	661	101.5	117	703	763.5	801	-
BF50G10-../D..06.A.	170.5	313	123	661	101.5	119	703	763.5	801	-
BF50G10-../D..07.A.	190.5	313	123	681	101.5	119	723	783.5	821	-
BF50G10-../D..08.A.	199.5	317	156	694	116	136.5	760	806	867.5	760
BF50G10-../D..08.B.	229.5	317	156	724	116	136.5	790	836	897	790
BF50G10-../D..09.A.	250.5	331.5	176	759.5	125.5	157	852.5	867	956.5	852.5
BF50G10-../D..09.B.	308.5	331.5	176	817.5	125.5	157	910.5	924.5	1014.5	910.5

Dimensions in millimetres (mm)

The actual gearbox design can vary from the geometry shown. Generate drive specific 3D and 2D geometries under www.BauerCat.com.

BF50G10

Flange with tapped holes
Code -7./

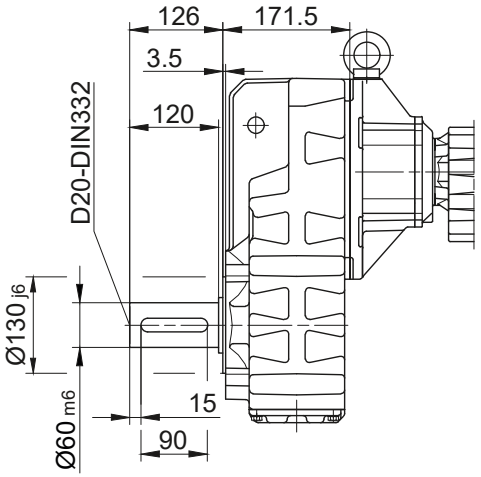

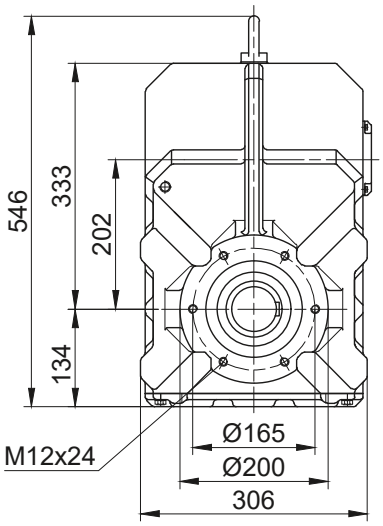

Flange with clearance holes
Code -3./
(Code -2./)

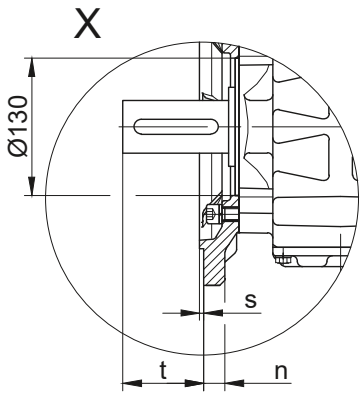

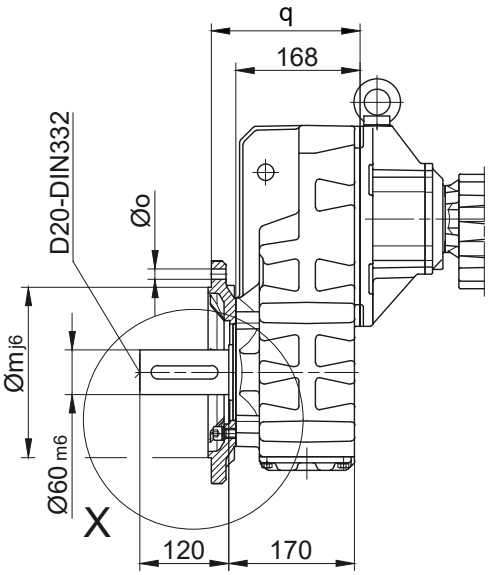

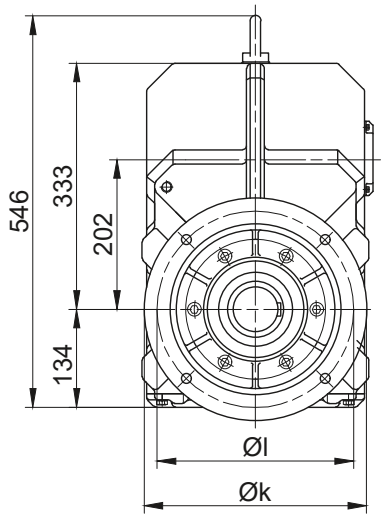

Flange Dimensions									
Type	Design	k	l	m	n	o	q	s	t
BF50..	Code -3./	300	265	230	20	13.5	201	4	96.5
BF50..	Code -2./	250	215	180	16	13.5	198	4	99.5
Dimensions in millimetres (mm)									

Foot with tapped holes left and right
Code -6.LR/

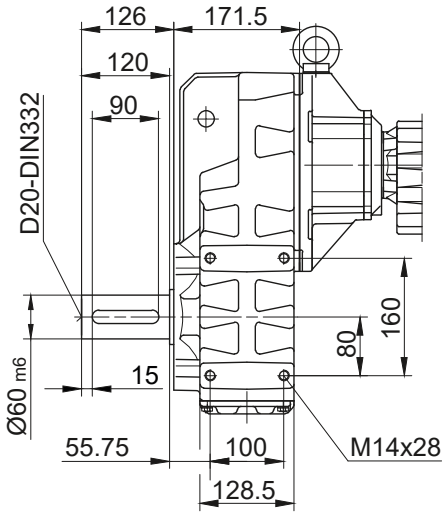

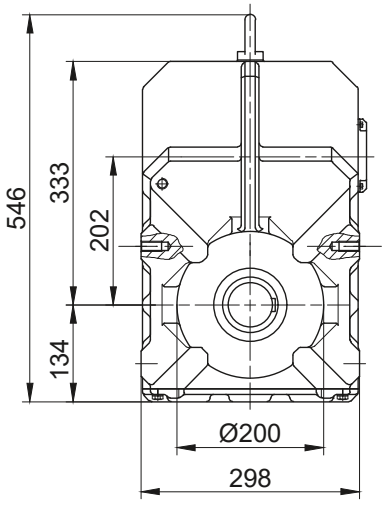

BF-series shaft-mounted geared motors

Dimension - Tandem Gearbox

BF60G20

with torque arm

Code -0./

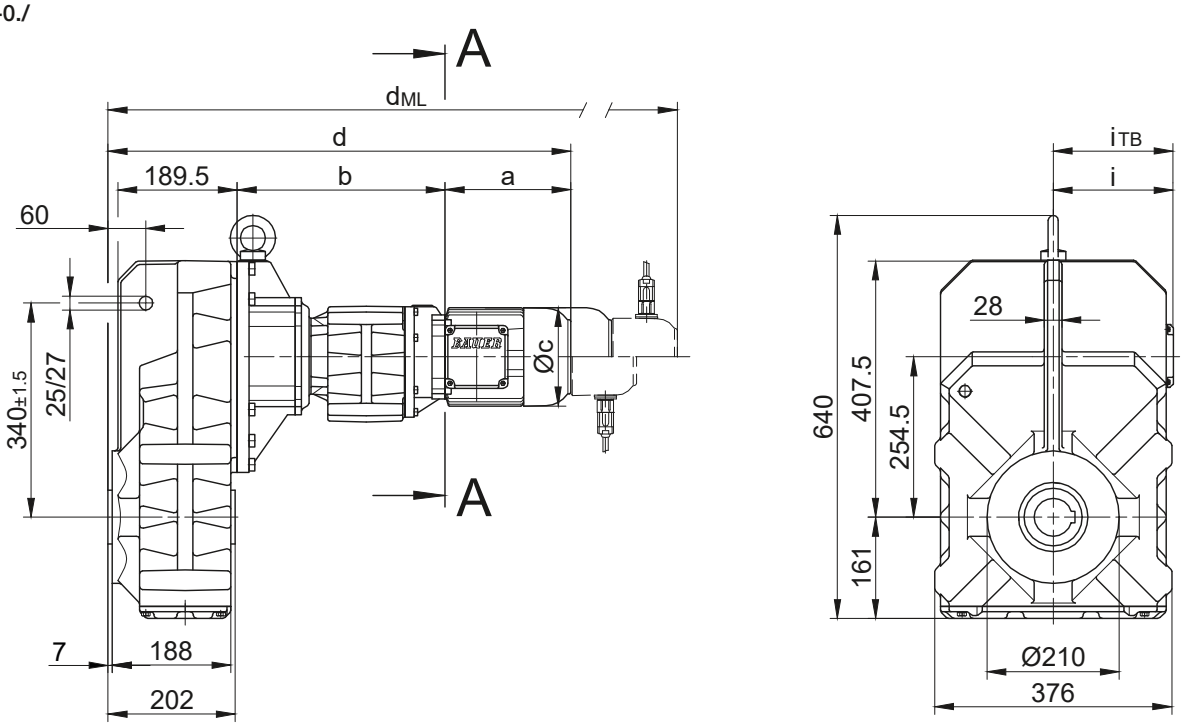

Code -.1/

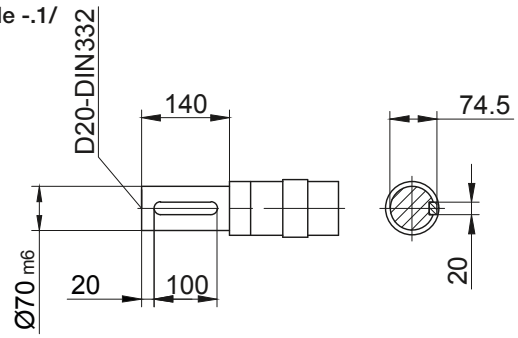

Code -.4/

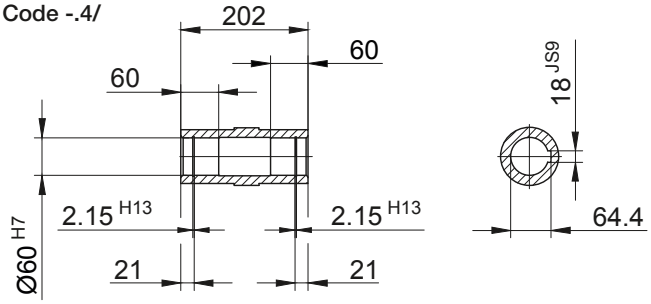

Code -.5/

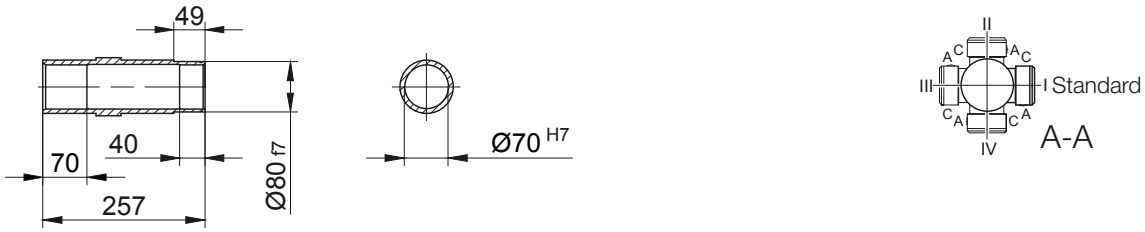

Type	a	b	c	d	i	Design with motor extensions				
						i_{TB}	Brake	Encoder	Brake with Encoder	Back Stop
							d_{ML}	d_{ML}	d_{ML}	d_{ML}
BF60G20-../D..05.A.	170.5	326	123	701.5	101.5	117	743.5	804	841.5	-
BF60G20-../D..06.A.	170.5	326	123	701.5	101.5	119	743.5	804	841.5	-
BF60G20-../D..07.A.	190.5	326	123	721.5	101.5	119	763.5	824	861.5	-
BF60G20-../D..08.A.	199.5	330	156	734.5	116	136.5	800.5	846.5	908	800.5
BF60G20-../D..08.B.	229.5	330	156	764.5	116	136.5	830.5	876.5	937.5	830.5
BF60G20-../D..09.A.	250.5	344.5	176	800	125.5	157	893	907.5	997	893
BF60G20-../D..09.B.	308.5	344.5	176	858	125.5	157	951	965	1055	951

Dimensions in millimetres (mm)

The actual gearbox design can vary from the geometry shown. Generate drive specific 3D and 2D geometries under www.BauerCat.com.

BF60G20

Flange with tapped holes
Code -7./

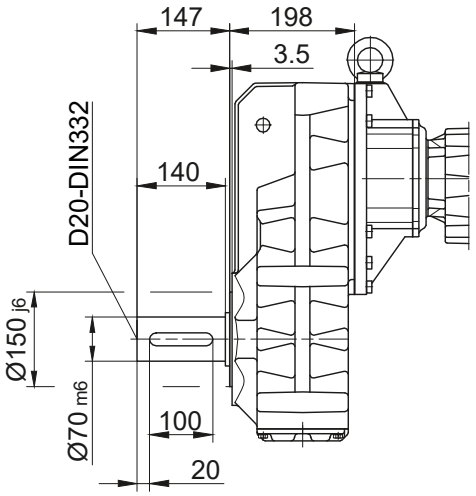

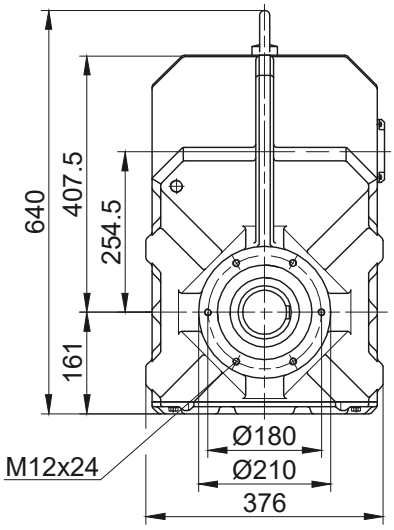

Flange with clearance holes
Code -3./
(Code -2./)

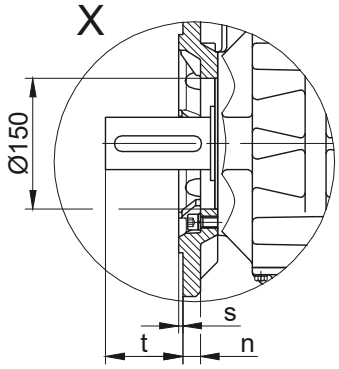

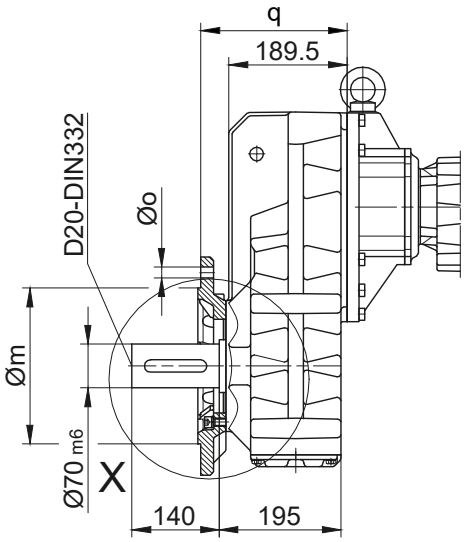

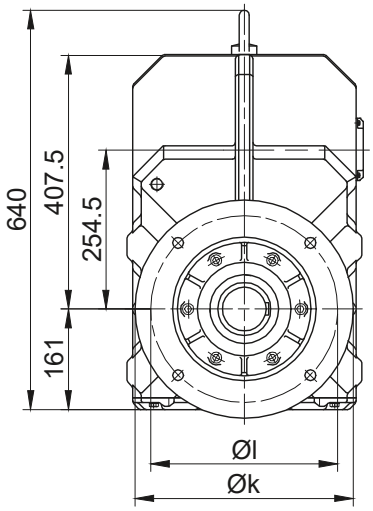

Flange Dimensions									
Type	Design	k	l	m	n	o	q	s	t
BF60..	Code -3./	350	300	250	20	17.5	234.5	5	110.5
BF60..	Code -2./	300	265	230	20	13.5	242.5	4	102.5
Dimensions in millimetres (mm)									

Foot with tapped holes left and right
Code -6.LR/

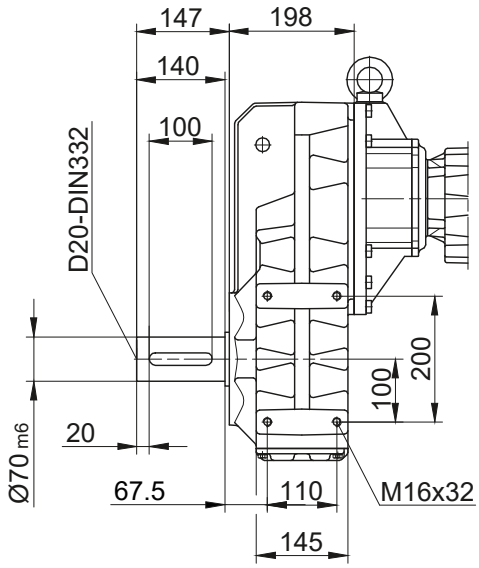

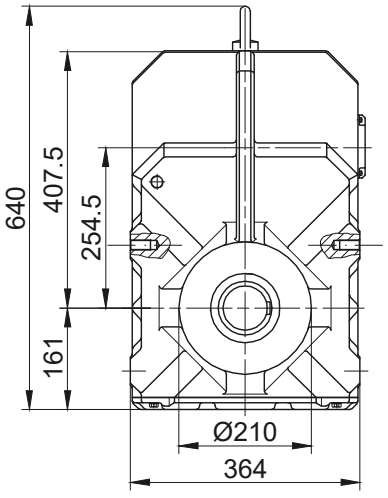

BF-series shaft-mounted geared motors

Dimension - Tandem Gearbox

BF70G20

with torque arm

Code -0./

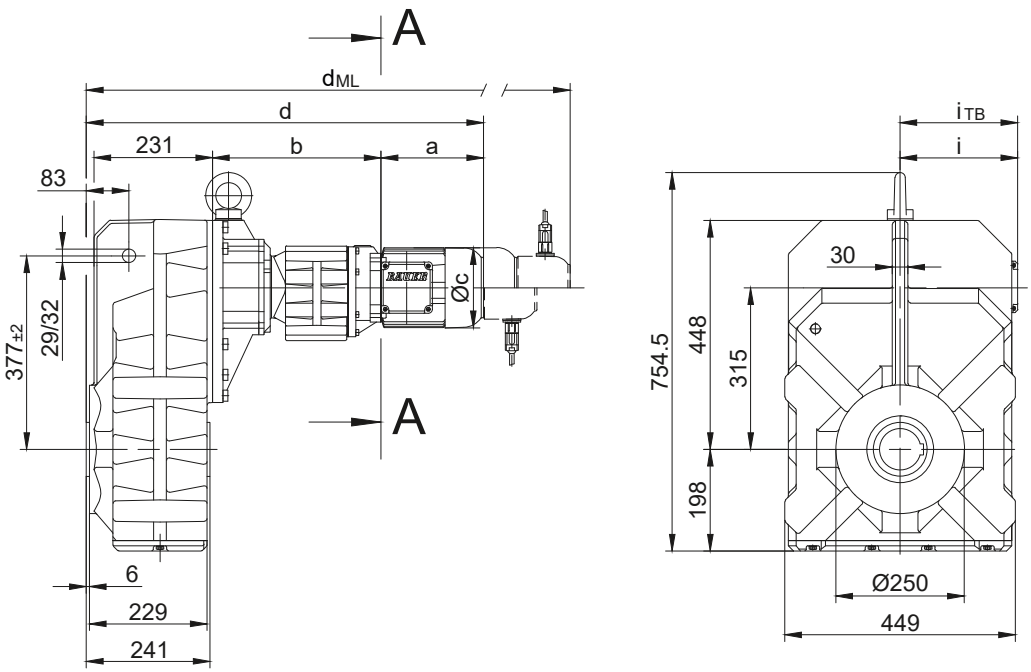

Code -.4/

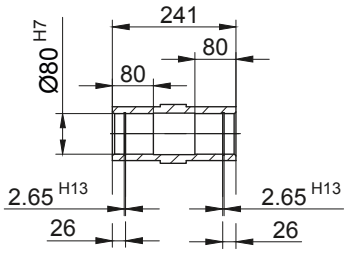

Code -.1/

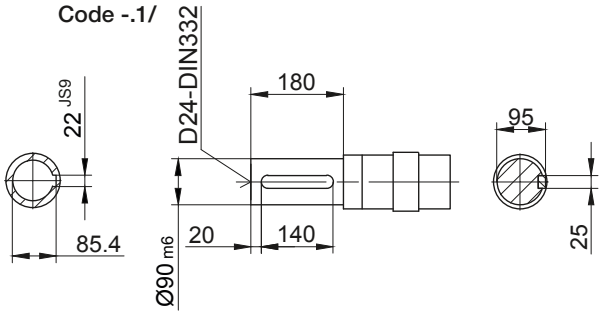

Code -.5/

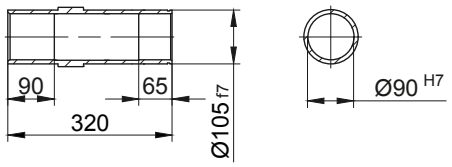

Code -.4/K70

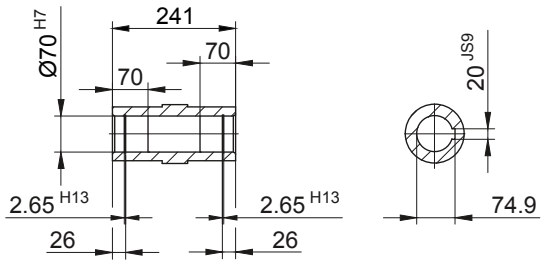

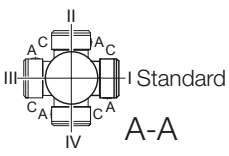

Type	a	b	c	d	i	Design with motor extensions				
						i_{TB}	Brake	Encoder	Brake with Encoder	Back Stop
							d_{ML}	d_{ML}	d_{ML}	d_{ML}
BF70G20-../D..05.A.	170.5	324	123	740.5	101.5	117	782.5	843	880.5	-
BF70G20-../D..06.A.	170.5	324	123	740.5	101.5	119	782.5	843	880.5	-
BF70G20-../D..07.A.	190.5	324	123	760.5	101.5	119	802.5	863	900.5	-
BF70G20-../D..08.A.	199.5	328	156	773.5	116	136.5	839.5	885.5	947	839.5
BF70G20-../D..08.B.	229.5	328	156	803.5	116	136.5	869.5	915.5	976.5	869.5
BF70G20-../D..09.A.	250.5	342.5	176	839	125.5	157	932	946.5	1036	932
BF70G20-../D..09.B.	308.5	342.5	176	897	125.5	157	990	1004	1094	990

Dimensions in millimetres (mm)

The actual gearbox design can vary from the geometry shown. Generate drive specific 3D and 2D geometries under www.BauerCat.com.

BF70G20

Flange with tapped holes
Code -7./

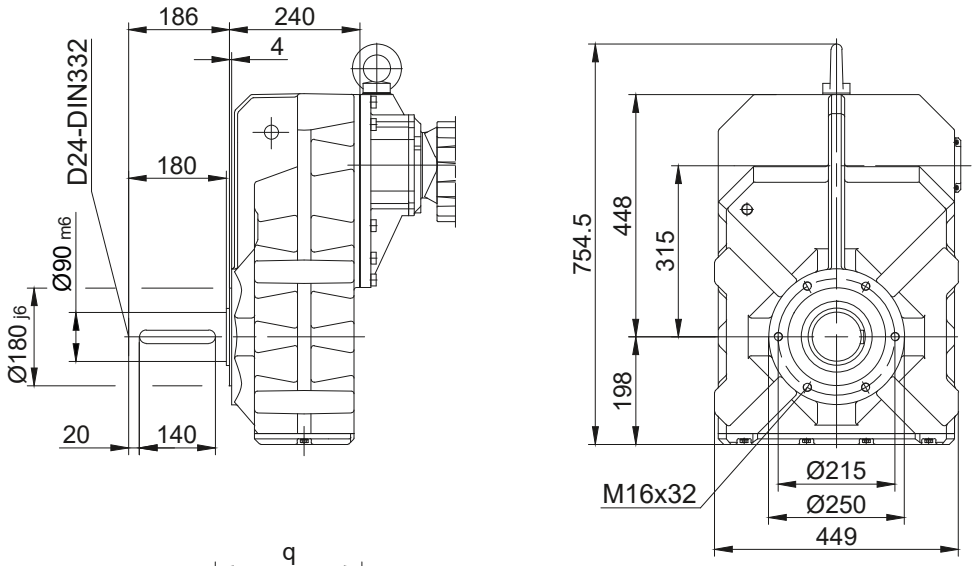

Flange with clearance holes
Code -3./
(Code -2./)
(Code -4./)

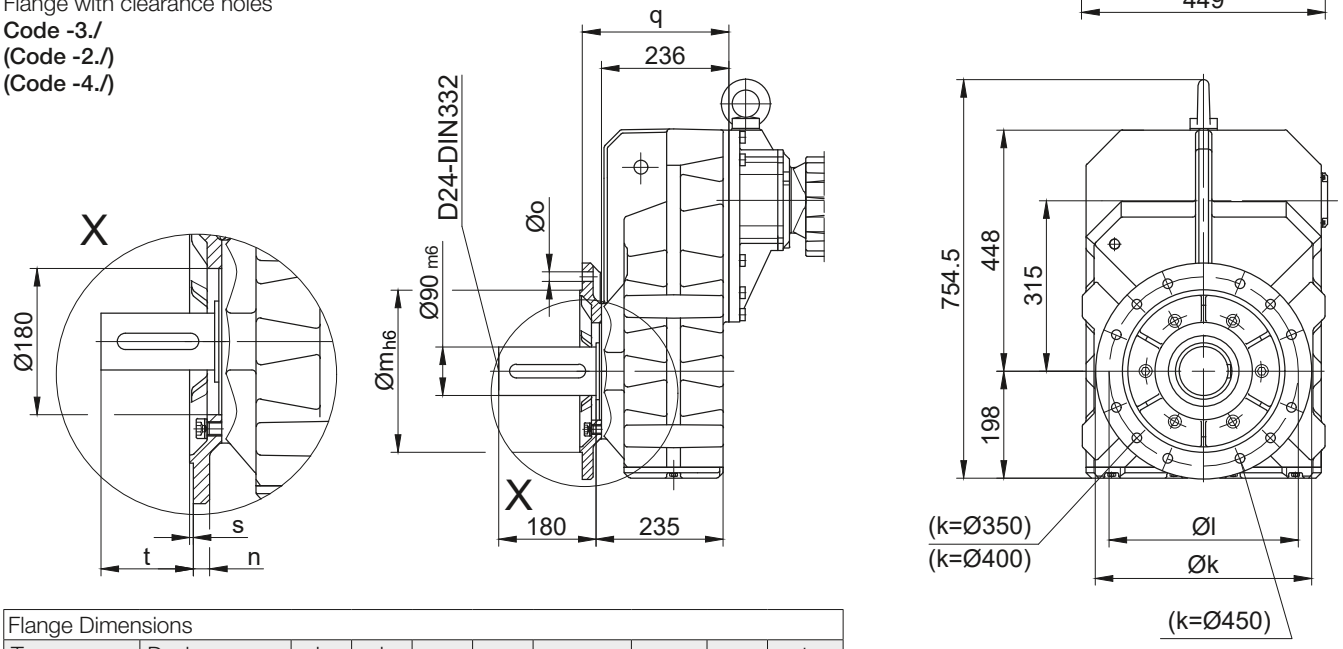

Flange Dimensions									
Type	Design	k	l	m	n	o	q	s	t
BF70..	Code -3./	400	350	300	20	4 x 17.5	271	5	155
BF70..	Code -2./	350	300	250	20	4 x 17.5	271	5	155
BF70..	Code -4./	450	400	350	22	8 x 17.5	281	5	145
Dimensions in millimetres (mm)									

Foot with tapped holes left and right
Code -6.LR/

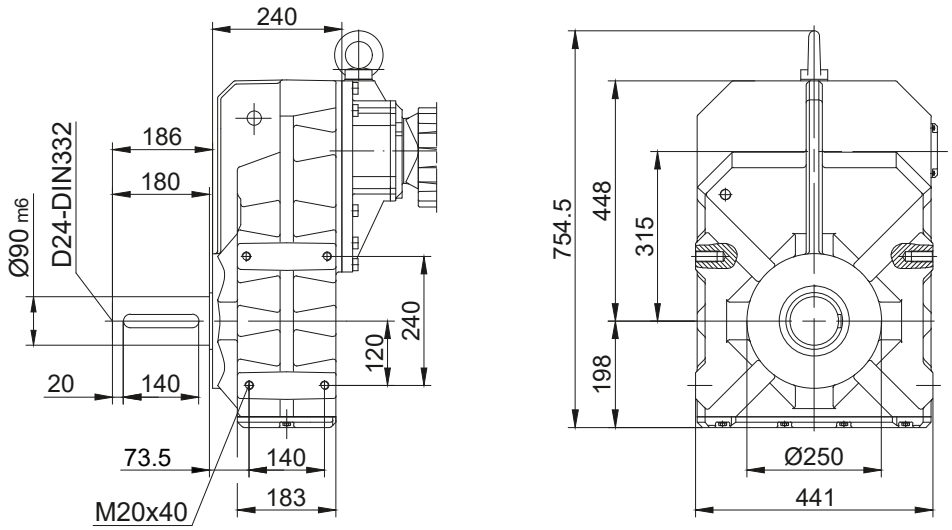

BF-series shaft-mounted geared motors

Dimension - Tandem Gearbox

BF80G40

with torque arm

Code -0./

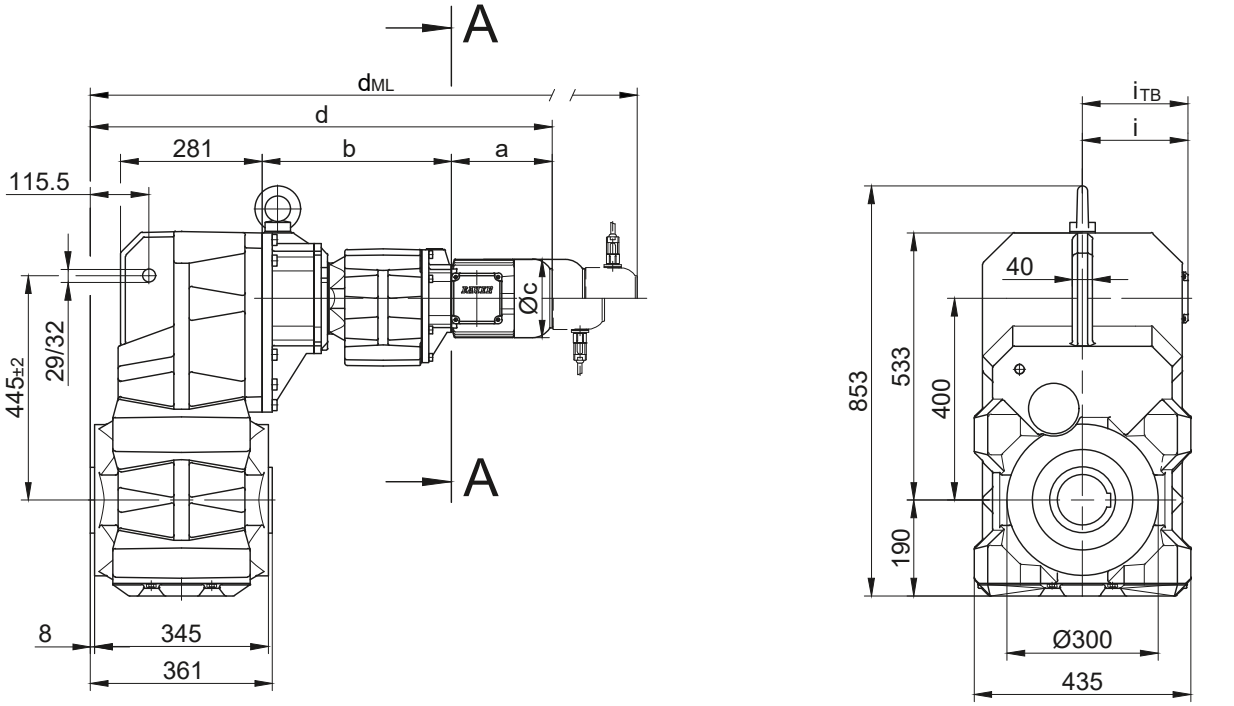

Code -.1/

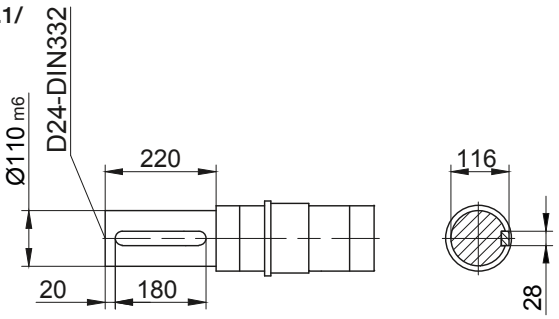

Code -.4/

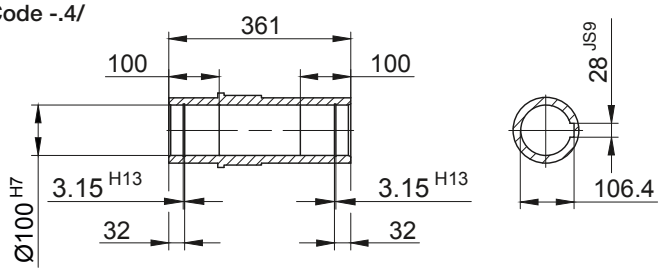

Code -.5/

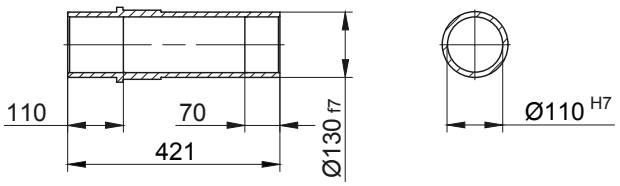

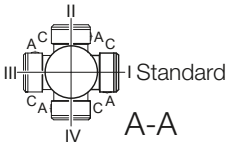

Type	a	b	c	d	i	Design with motor extensions				
						i_{TB}	Brake	Encoder	Brake with Encoder	Back Stop
							d_{ML}	d_{ML}	d_{ML}	d_{ML}
BF80G40-../D..08.A.	199.5	376	156	916	116	136.5	982	1028	1089.5	982
BF80G40-../D..08.B.	229.5	376	156	946	116	136.5	1012	1058	1119	1012
BF80G40-../D..09.A.	250.5	390.5	176	981.5	125.5	157	1074.5	1089	1178.5	1074.5
BF80G40-../D..09.B.	308.5	390.5	176	1039.5	125.5	157	1132.5	1146.5	1236.5	1132.5
BF80G40-../D..11.A.	319	397	218	1056.5	165	176	1154.5	1164	1256.5	1154.5
BF80G40-../D..11.B.	387	397	218	1124.5	165	176	1220.5	1232	1324.5	1220.5

Dimensions in millimetres (mm)

The actual gearbox design can vary from the geometry shown. Generate drive specific 3D and 2D geometries under www.BauerCat.com.

BF80G40

Flange with tapped holes
Code -7./

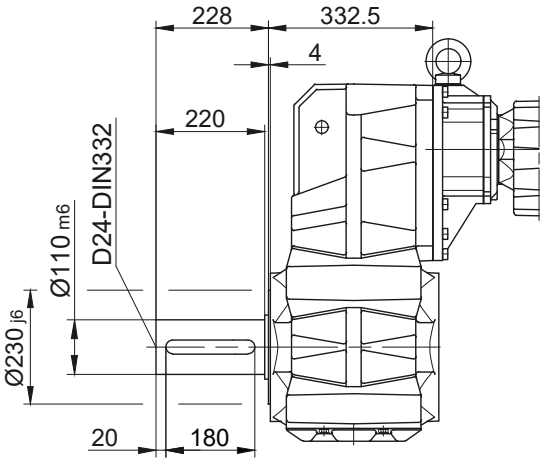

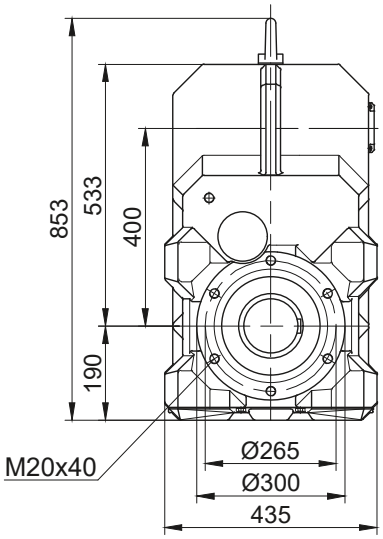

Flange with clearance holes
Code -3./
(Code -4./)

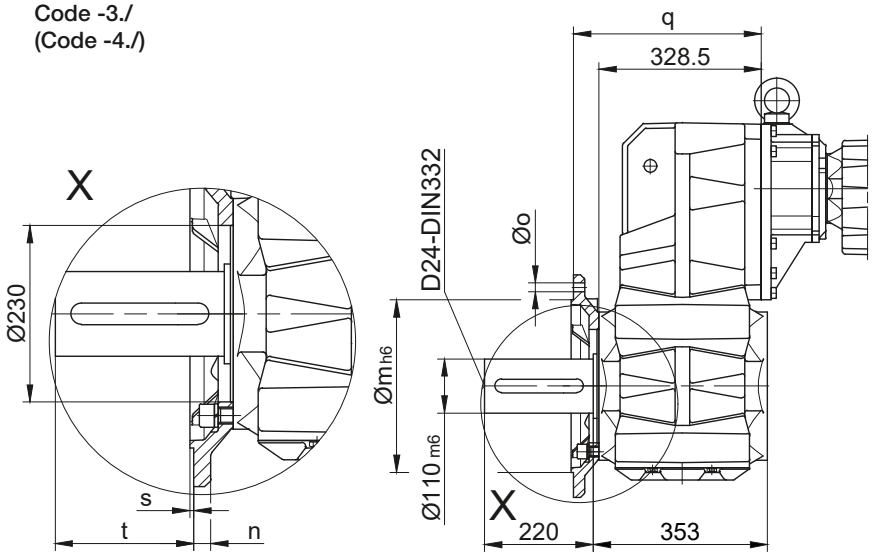

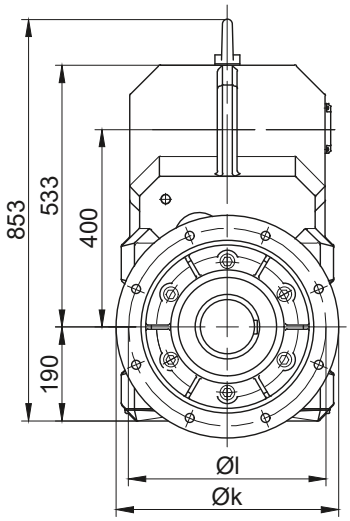

Flange Dimensions									
Type	Design	k	l	m	n	o	q	s	t
BF80..	Code -3./	450	400	350	22	17.5	383.5	5	177
BF80..	Code -4./	550	500	450	22	17.5	388.5	5	172
Dimensions in millimetres (mm)									

Foot with clearance holes left and right
Code -1.LR/

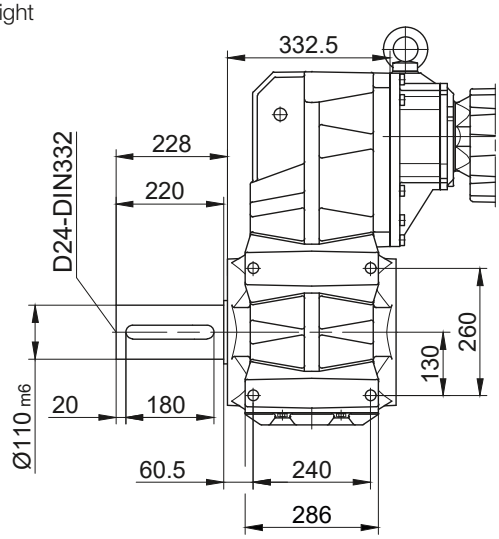

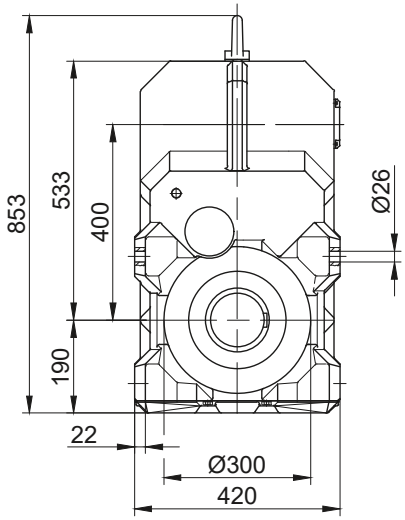

The actual gearbox design can vary from the geometry shown. Generate drive specific 3D and 2D geometries under www.BauerCat.com.

BF-series shaft-mounted geared motors

Dimension - Tandem Gearbox

BF90G50

with torque arm

Code -0./

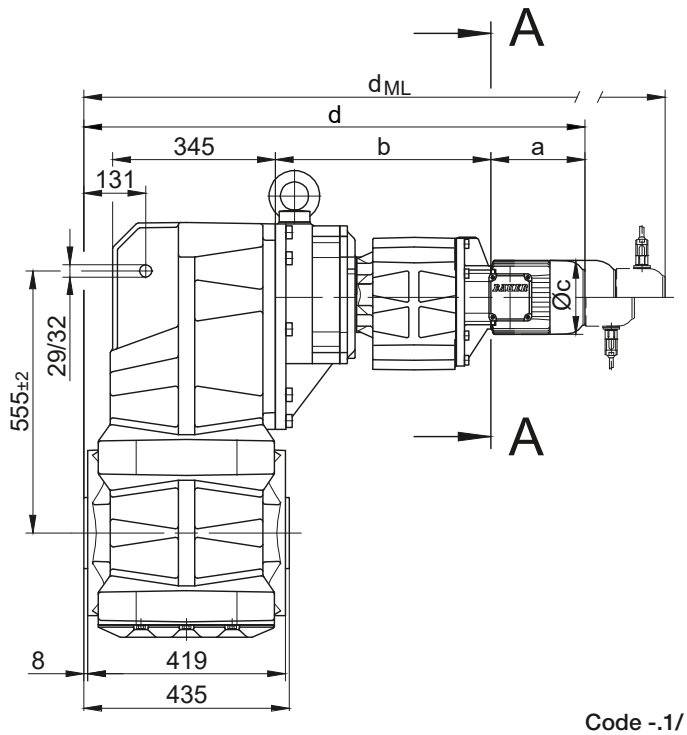

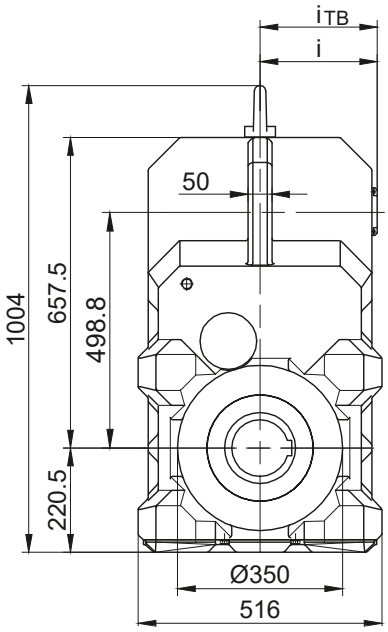

Code -.1/

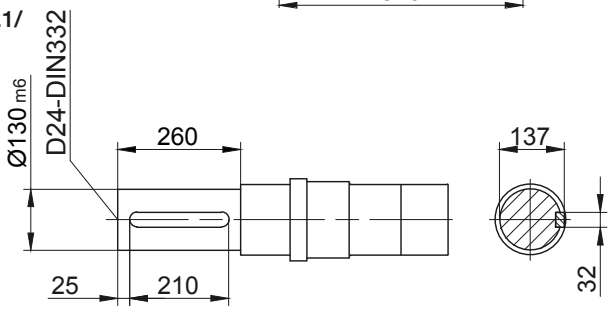

Code -.4/

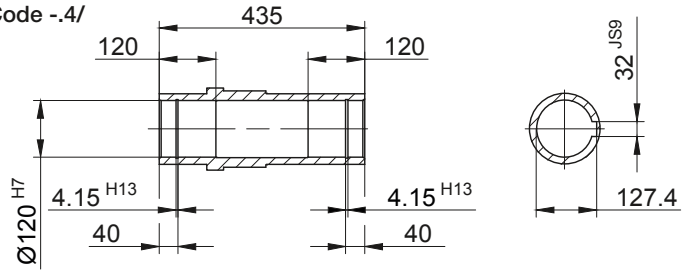

Code -.5/

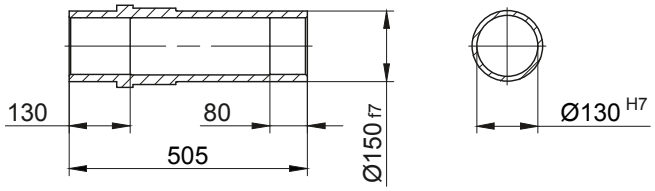

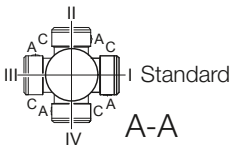

Type	a	b	c	d	i	Design with motor extensions				
						i_{TB}	Brake	Encoder	Brake with Encoder	Back Stop
							d_{ML}	d_{ML}	d_{ML}	d_{ML}
BF90G50-../D..08.A.	199.5	456	156	1061.5	116	136.5	1127.5	1173.5	1235	1127.5
BF90G50-../D..08.B.	229.5	456	156	1091.5	116	136.5	1157.5	1203.5	1264.5	1157.5
BF90G50-../D..09.A.	250.5	470.5	176	1127	125.5	157	1220	1234.5	1324	1220
BF90G50-../D..09.B.	308.5	470.5	176	1185	125.5	157	1278	1292	1382	1278
BF90G50-../D..11.A.	319	477	218	1202	165	176	1300	1309.5	1402	1300
BF90G50-../D..11.B.	387	477	218	1270	165	176	1366	1377.5	1470	1366
BF90G50-../D..13.A.	393	490	258	1289	217	217	1400	1396	1501	1397
BF90G50-../D..16.B.	454.5	504	310	1364.5	243	243	1508	1471.5	1611.5	1508
BF90G50-../D..18.B.	542	526	348	1474	288	288	1623.5	1579.5	1727	1623.5

Dimensions in millimetres (mm)

The actual gearbox design can vary from the geometry shown. Generate drive specific 3D and 2D geometries under www.BauerCat.com.

BF90G50

Flange with tapped holes
Code -7./

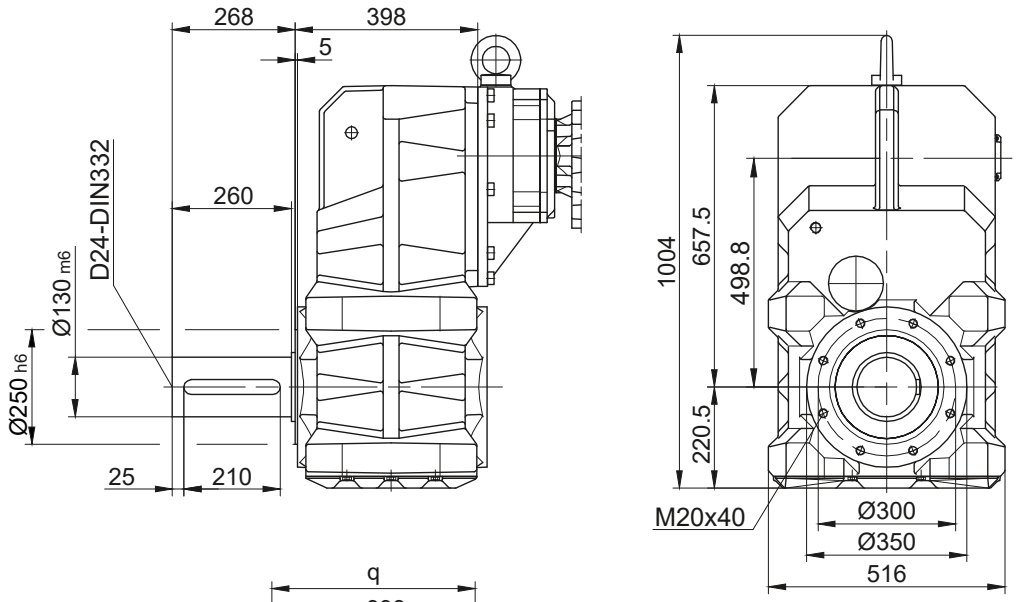

Flange with clearance holes
Code -3./
(Code -4./)

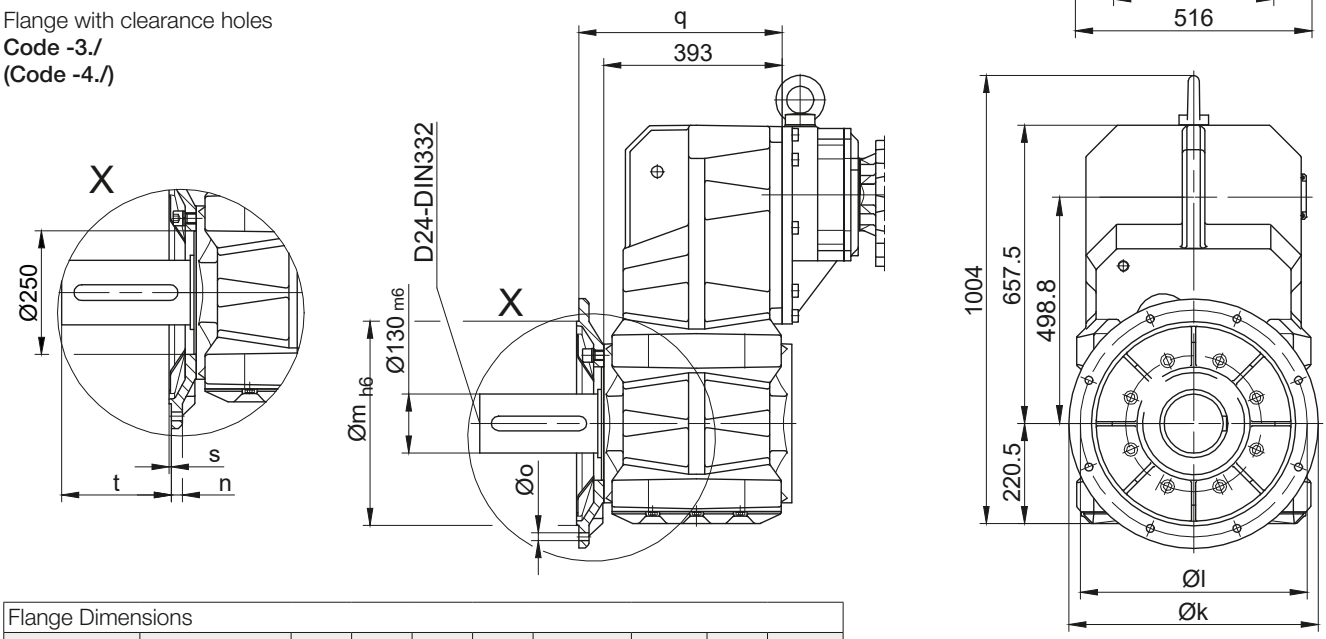

Flange Dimensions									
Type	Design	k	l	m	n	o	q	s	t
BF90..	Code -3./	550	500	450	22	17.5	448	5	218
BF90..	Code -4./	660	600	550	25	22	442	6	224
Dimensions in millimetres (mm)									

Foot with clearance holes left and right
Code -1.LR/

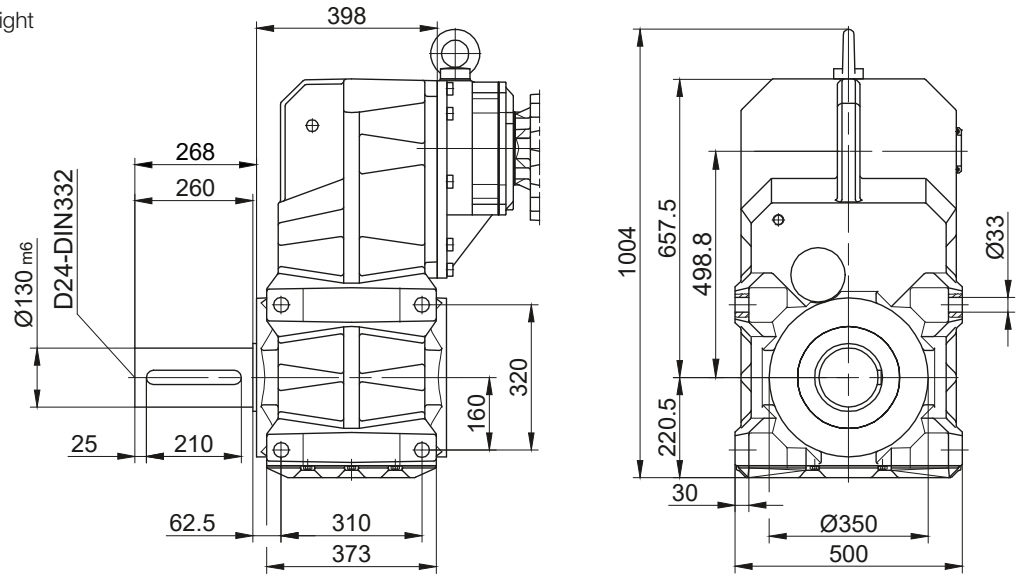

Splined shaft

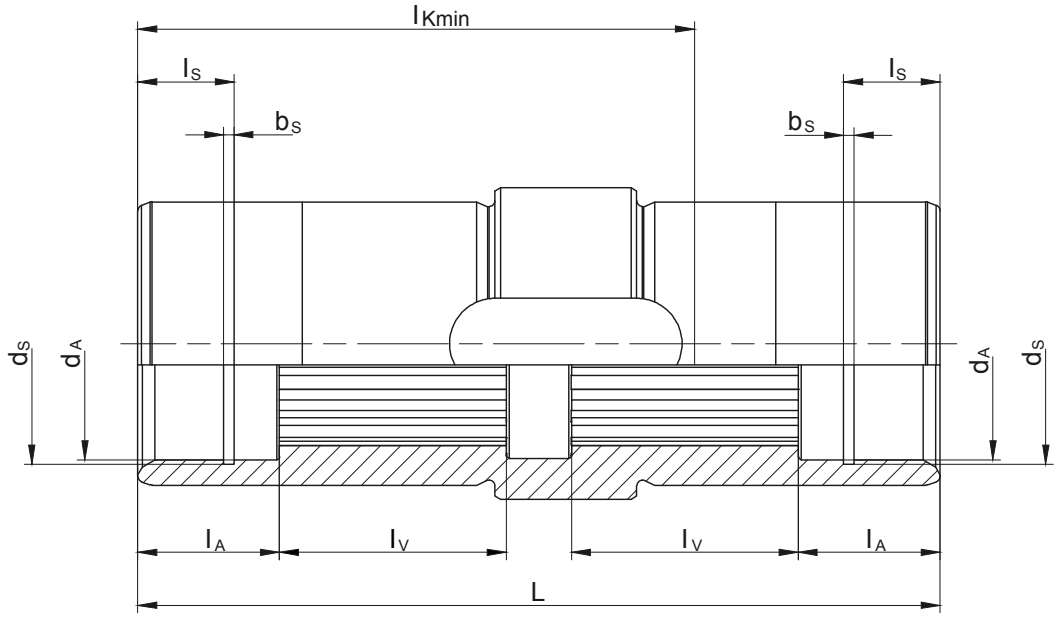

Type	Splined shaft acc. to DIN 5480	d_A	l_A	l_V	l_{Kmin}	L	d_S	l_S	b_S
BF06	N25x1.25x18x9H	30^{G7}	22	20	68	92	31.4^{H12}	15	1.3^{H13}
BF10	N30x1.25x22x9H	30.5^{G7}	22	33.5	87	124.5	31.4^{H12}	15	1.3^{H13}
BF20	N35x2x16x9H	36^{G7}	22	35	92	130	37^{H12}	9.5	1.6^{H13}
BF30	N40x2x18x9H	41^{G7}	25	40	103	141.5	42.5^{H12}	15	1.85^{H13}
BF40	N50x2x24x9H	51^{G7}	25	48	120	166	53^{H12}	9.5	2.15^{H13}
BF50	N60x2x28x9H	61^{G7}	25	55	123	176	63^{H12}	17	2.15^{H13}
BF60	N70x2x34x9H	72^{G7}	25	70	147	202	75^{H12}	17	2.65^{H13}
BF70	N85x3x27x9H	86^{G7}	26	85	185	241	88.5^{H12}	17	3.15^{H13}
BF80	N110x3x35x9H	112^{G7}	50	90	292	361	116^{H12}	30	4.15^{H13}
BF90	N130x5x24x9H	131.5^{G7}	60	110	365	435	134^{H12}	30	4.15^{H13}
Dimensions in millimetres (mm)									

Shrink disc coupling (SSV)

(Code BF10-.5/...)
(Code BF10Z-.5/...)

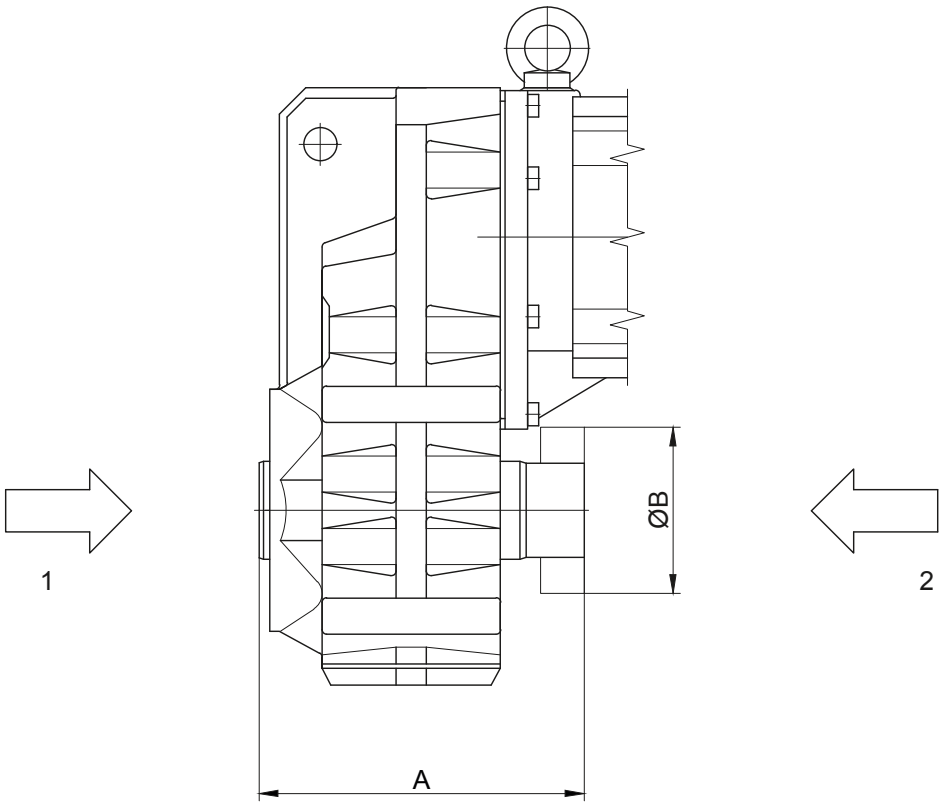

1 Gear side FRONT (V)
2 Gear side REAR (H)

Type	SSV Ringfeder	SSV STÜWE	A	B
BF10	RfN 4161 036x072	HSD 36-22x36	153	72
BF20	RfN 4161 044x080	HSD 44-22x44	173	80
BF30	RfN 4161 050x090	HSD 50-22x50	192	90
BF40	RfN 4161 062x110	HSD 62-22x62	215	110
BF50	RfN 4161 068x115	HSD 68-22x68	211	115
BF60	RfN 4161 080x141	HSD 80-22x80	257	140
BF70	RfN 4161 105x185	HSD 110-22x105	320	185
BF80	RfN 4161 130x215	HSD 125-22x130	421	215
BF90	RfN 4161 150x263	HSD 155-22x150	505	263
Dimensions in millimetres (mm)				

The actual gearbox design can vary from the geometry shown. Generate drive specific 3D and 2D geometries under www.BauerCat.com.

Shrink disc coupling with (SSV) cover

(Code BF10-.5A/...)
(Code BF10Z-.5A/...)

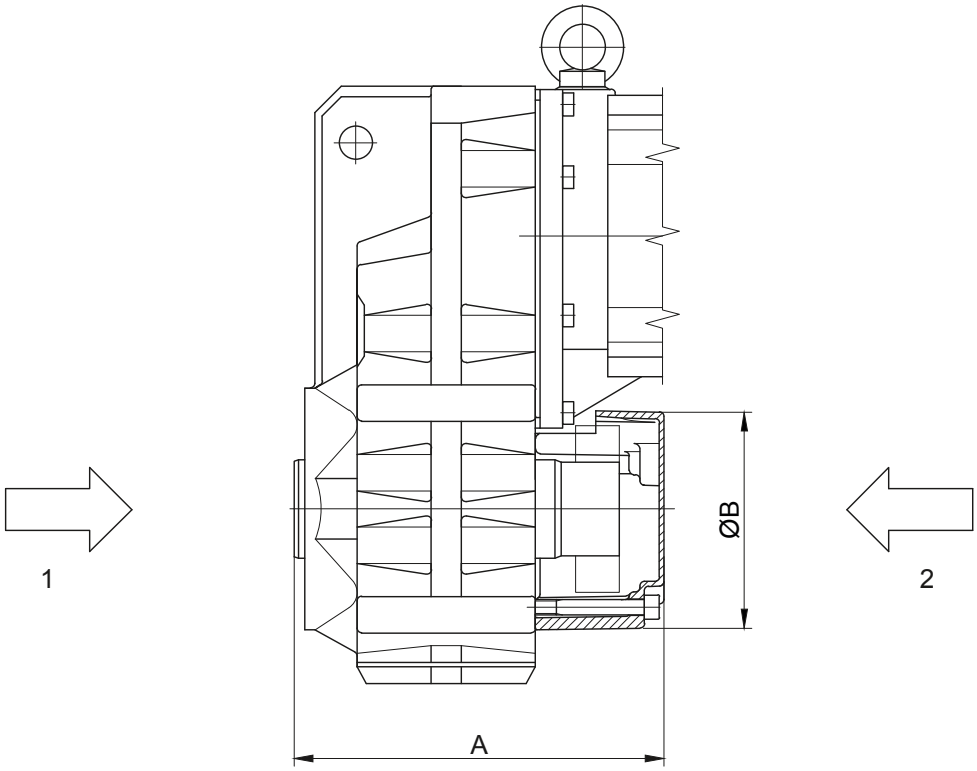

1 Gear side FRONT (V)
2 Gear side REAR (H)

Type	SSV Ringfeder	SSV STÜWE	A	B
BF10	RfN 4161 036x072	HSD 36-22x36	174	120
BF20	RfN 4161 044x080	HSD 44-22x44	211	140
BF30	RfN 4161 050x090	HSD 50-22x50	223	140
BF40	RfN 4161 062x110	HSD 62-22x62	245	160
BF50	RfN 4161 068x115	HSD 68-22x68	229	200
BF60	RfN 4161 080x141	HSD 80-22x80	290	210
BF70	RfN 4161 105x185	HSD 110-22x105	359	250
BF80	RfN 4161 130x215	HSD 125-22x130	466	300
BF90	RfN 4161 150x263	HSD 155-22x150	557	350
Dimensions in millimetres (mm)				

BF-series shaft-mounted geared motors

Additional Dimension Sheet

Tapped Holes Side (H) → Shaft Cover

BF10 to BF70

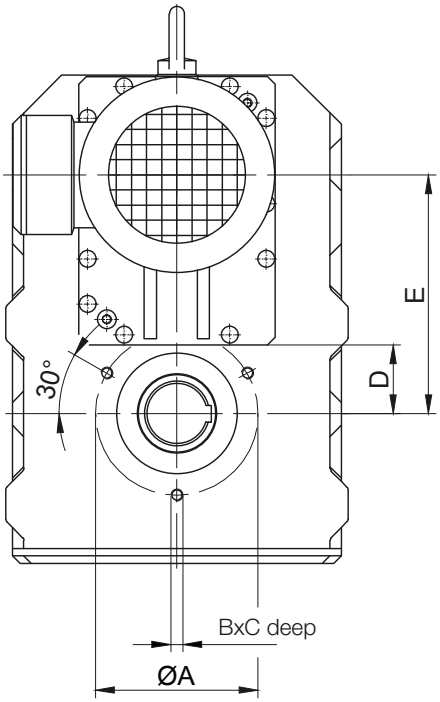

BF80 **BF90**

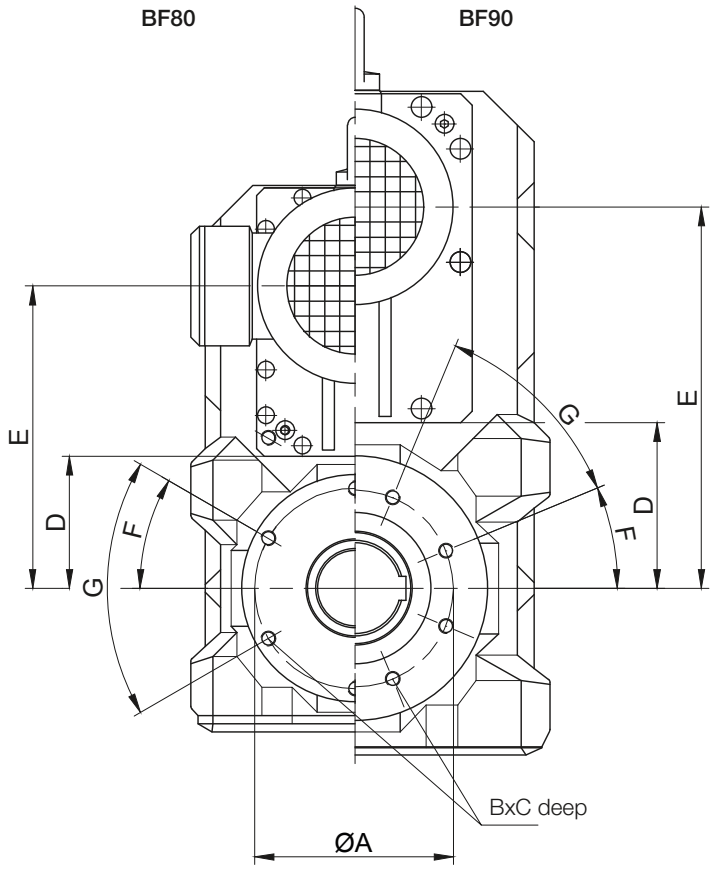

Gear	A	B	C	D	E	F	G
BF10	100	M8	16	35	118	-	-
BF20	115	M10	20	39	136	-	-
BF30	115	M10	20	44	157	-	-
BF40	130	M10	20	52	180.5	-	-
BF50	165	M12	24	60	207	-	-
BF60	180	M12	24	69	255.5	-	-
BF70	215	M16	32	89	316	-	-
BF80	265	M20	40	173	400	30°	6x60°
BF90	300	M20	40	219	504.5	22.5°	8x45°
Dimensions in millimetres (mm)							

The actual gearbox design can vary from the geometry shown. Generate drive specific 3D and 2D geometries under www.BauerCat.com.

Rubber buffer for torque restraint

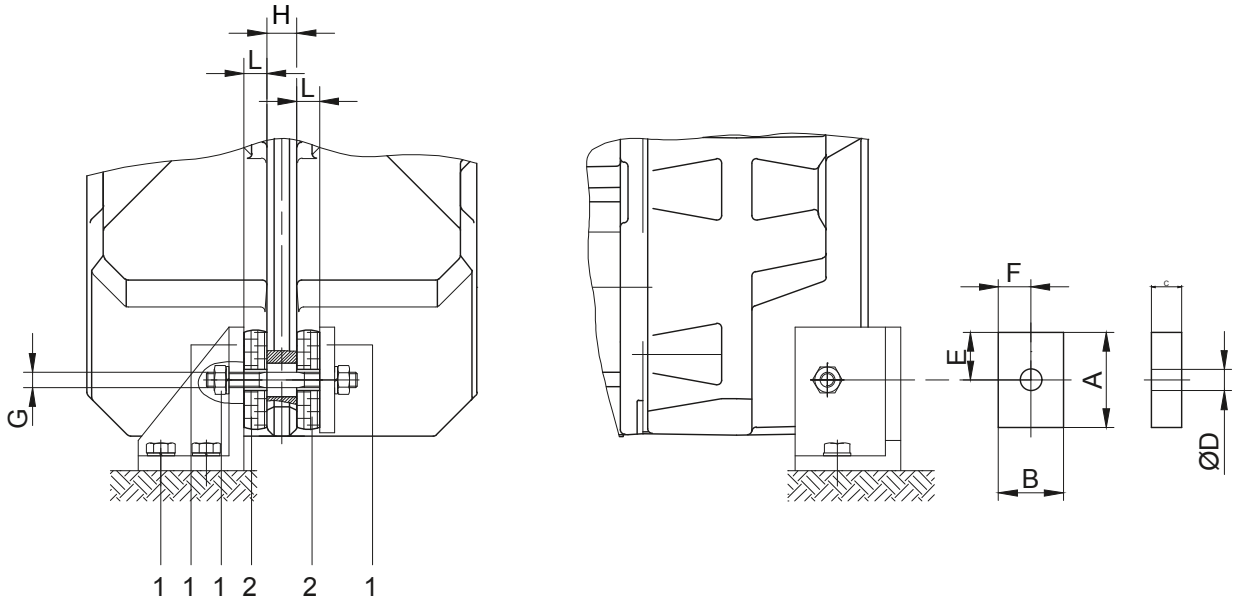

1 not included in delivery

2 Rubber buffers pretensioned

G maximaler Schraubendurchmesser

Material: Natural rubber Hardness 50 +/-5 Shore A
Dimensions of the transverse hole: See dimensioned sketch of the respective shaft mounted gearbox

Gear	Position	A	B	C	D	E	F	G	H	L
BF06	0	30	30	12	12	15	15	M10	10	10
BF10	1	48	32	15	14	24	16	M10	16	13.5
BF20	1	48	32	15	14	24	16	M10	18	13
BF30	2	63	43	20	14	31.5	21.5	M10	18	17
BF40	2	63	43	20	14	31.5	21.5	M10	20	16.5
BF50	3	88	60	25	22	44	30	M18	24	21.5
BF60	3	88	60	25	22	44	30	M18	28	21
BF70	4	123	88	30	26	61.5	44	M20	30	25.5
BF80	5	133	103	35	26	66.5	51.5	M20	40	30
BF90	5	133	103	35	26	66.5	51.5	M20	50	29.5
Dimensions in millimetres (mm)										

BF-series shaft-mounted geared motors

Additional Dimension Sheet

Assembly tools for hollow shaft and keyway

Position 1 Shaft

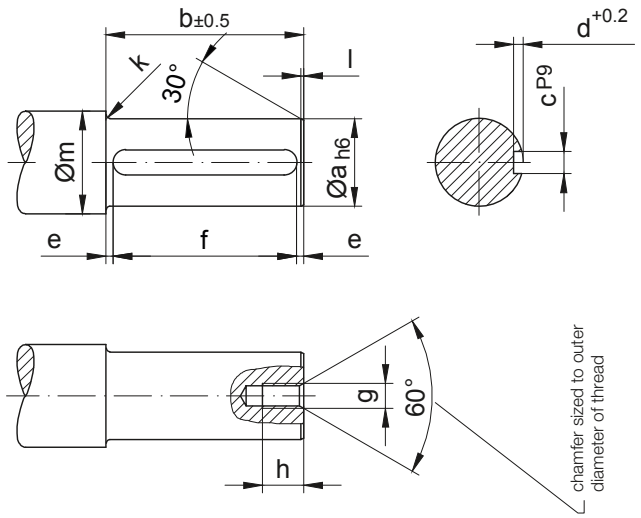

* Position 2 Disc

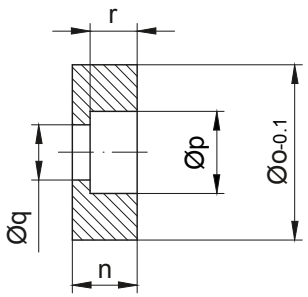

Material: Steel, tensile strength ≥ 470 N/mm²

Type	Dimensions (mm)															
	Position 1 Shaft											Position 2 Disc				
	a	b	c	d	e	f	g	h	k	l	m	n	o	p	q	r
BF06	25	70	8	4	3.5	$63^{+0.5}$	M8	18	2	1.5	33	13.5	24.8	15	9	8.5
BF10	25	102	8	4	6	$90^{+0.5}$	M8	18	2.5	1.5	33	13.5	24.8	15	9	8.5
BF20	30	108	8	4	9	$90^{+0.5}$	M10	20	3	1.5	38	15	29.8	18	11	10
BF30	35	118	10	5	9	$100^{+0.5}$	M10	20	3	1.5	43	16	34.8	18	11	10
BF40	40	141	12	5	8	$125^{+0.5}$	M12	22	3	2	48	18	39.8	20	13.5	12
BF50	50	148	14	5.5	11.5	$125^{+0.5}$	M16	30	3.5	2	58	21	49.8	26	17.5	15
BF60	60	173	18	7	6.5	$160^{+0.5}$	M20	38	3.5	2	68	24	59.8	33	22	18
BF70	80	205	22	9	12.5	$180^{+0.5}$	M20	38	4	2	90	27	79.8	33	22	20
BF70-K70	70	205	20	7.5	12.5	$180^{+0.5}$	M20	38	4	2	90	27	69.8	33	22	20
BF80	100	317	28	10	18.5	$280^{+0.5}$	M24	45	4	3	110	32	99.8	40	26	25
BF90	120	383	32	11	11.5	$360^{+0.5}$	M24	45	4.5	3	130	35	119.8	40	26	28

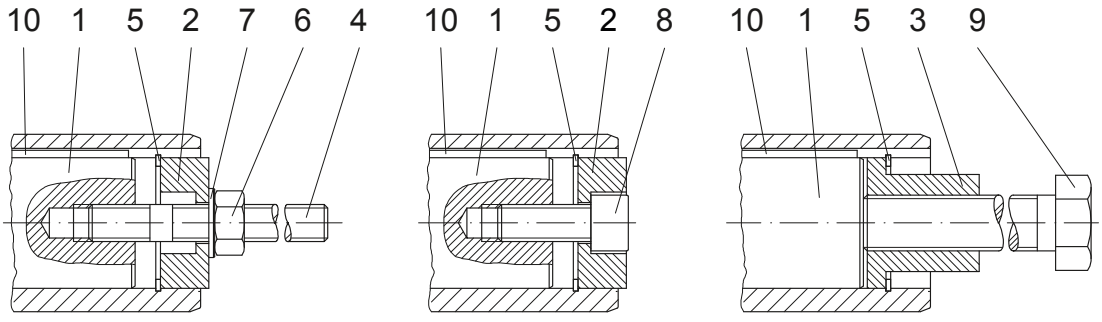

Installation Holding Dismantlement

The parts shown are neccessary for assembly. ONLY * specified parts are enclosed in the assembly kit.
Suitable measures are to be used to secure Bolt Pos. 8 against loosening!

The actual gearbox design can vary from the geometry shown. Generate drive specific 3D and 2D geometries under www.BauerCat.com.

Assembly tools for hollow shaft and keyway

Position 3 Sleeve

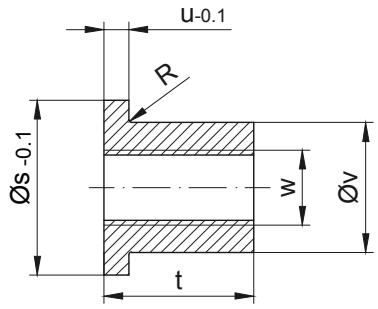

Material: Steel, tensile strength ≥ 470 N/mm²

* Position 4 Stud bolt

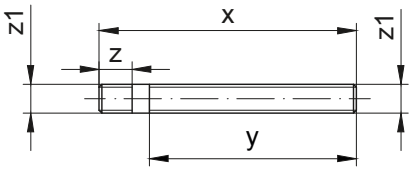

Material: Steel, tensile strength ≥ 1000 N/mm² Thread rolled

Type	Dimensions (mm)										* Retaining ring DIN 472	Hexagon nut DIN 394-8	Disc DIN 125-St	* Filister head screw DIN 912-8.8	Tightening torques (Nm)	Hexagon bolt DIN EN 24017-8.8	Key DIN 6885 Width/Height/Length
	Position 3 Sleeve						Position 4 Stud bolt										
	s	t	u	v	w	R	x	y	z	z1	Pos.5	Pos.6	Pos.7	Pos.8		Pos.9	Pos.10
BF06	24.8	24	5	15.4	M12	0.8	160	130	20	M8	25x1.2	M8	8.4	M8x30	5	M12x110	A 8x7x63
BF10	24.8	24	5	15.4	M12	0.8	160	130	20	M8	25x1.2	M8	8.4	M8x30		M12x140	A 8x7x90
BF20	29.8	28	5	19.8	M14	0.8	170	135	23	M10	30x1.2	M10	10.5	M10x30	8	M14x150	A 8x7x90
BF30	34.8	28	5	23	M14	-	180	145	23	M10	35x1.5	M10	10.5	M10x35		M14x160	A 10x8x100
BF40	39.8	40	6	27.7	M20	0.8	210	170	28	M12	40x1.75	M12	13	M12x35	16	M20x200	A 12x8x125
BF50	49.8	48	6	36	M24	-	230	175	37	M16	50x2.0	M16	17	M16x40	30	M24x210	A 14x9x125
BF60	59.8	60	6	44	M30	-	270	205	45	M20	60x2.0	M20	21	M20x50	42	M30x250	A 18x11x160
BF70	79.8	60	8	55	M30	-	310	240	45	M20	80x2.5	M20	21	M20x50		M30x280	A 22x14x180
BF70-K70	69.8	60	8	53	M30	-	310	240	45	M20	70x2.5	M20	21	M20x50		M30x280	A 20x12x180
BF80	99.8	72	10	75	M36	-	440	360	55	M24	100x3.0	M24	25	M24x60	100	M36x410	A 28x16x280
BF90	119.8	72	10	80	M36	-	510	430	55	M24	120x4.0	M24	25	M24x60		M36x480	A 32x18x360

The parts shown are neccessary for assembly. ONLY * specified parts are enclosed in the assembly kit.
Suitable measures are to be used to secure Bolt Pos. 8 against loosening!

Optional

Type	Assembly tool „Holding“
BF06	Id.Nr. 4103921
BF10	Id.Nr. 4103921
BF20	Id.Nr. 4103939
BF30	Id.Nr. 4103947
BF40	Id.Nr. 4103955
BF50	Id.Nr. 4103963
BF60	Id.Nr. 4103971
BF70	Id.Nr. 4103980
BF70-K70	Id.Nr. 4104765
BF80	Id.Nr. 4103998
BF90	Id.Nr. 4104005

BF-series shaft-mounted geared motors

Additional Dimension Sheet

Assembly tools for shaft mounted gears with splined shaft

Position 1 Shaft

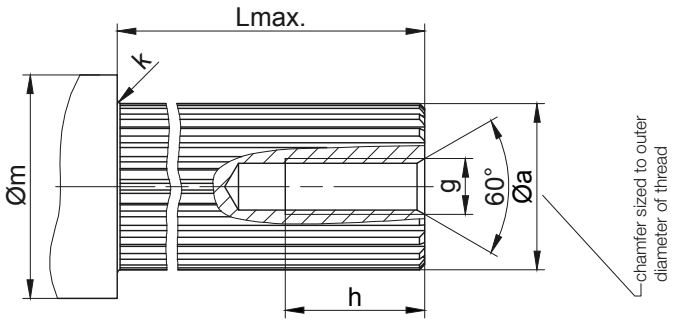

* Position 2 Disc

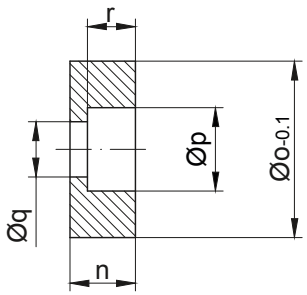

Material: Steel, tensile strength ≥ 470 N/mm²

Type	Dimensions (mm)										
	Position 1 Shaft						Position 2 Disc				
	a	g	h	g	Lmax.	m	n	o	p	q	r
BF06	DIN 5480-W25x1.25x18x8f	M8	20	2	70	37	13	29.9	15	9	8
BF10	DIN 5480-W30x1.25x22x8f	M10	25	2.5	100	38	15	30.4	18	11	10
BF20	DIN 5480-W35x2x16x8f	M10	25	3	110	43	14	35.9	18	11	10
BF30	DIN 5480-W40x2x18x8f	M12	30	3	117	48	18	40.9	20	13.5	12
BF40	DIN 5480-W50x2x24x8f	M16	35	3	145	60	17.5	50.9	26	17.5	12.5
BF50	DIN 5480-W60x2x28x8f	M20	40	3.5	150	69	24	60.9	33	22	18
BF60	DIN 5480-W70x2x34x8f	M20	40	3.5	175	80	24	71.9	33	22	18
BF70	DIN 5480-W85x3x27x8f	M20	40	4	215	96	22	85.9	33	22	16
BF80	DIN 5480-W110x3x35x8f	M24	50	4	315	122	32	111.9	40	26	25
BF90	DIN 5480-W130x5x24x8f	M24	50	4.5	390	141	25	131.4	40	26	18

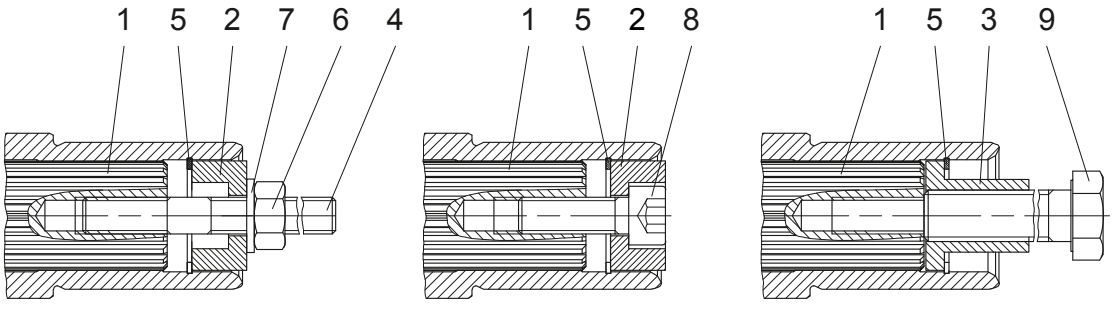

Installation Holding Dismantlement

The parts shown are neccessary for assembly. ONLY * specified parts are enclosed in the assembly kit.
Suitable measures are to be used to secure Bolt Pos. 8 against loosening!

The actual gearbox design can vary from the geometry shown. Generate drive specific 3D and 2D geometries under www.BauerCat.com.

Assembly tools for shaft mounted gears with splined shaft

Position 3 Sleeve

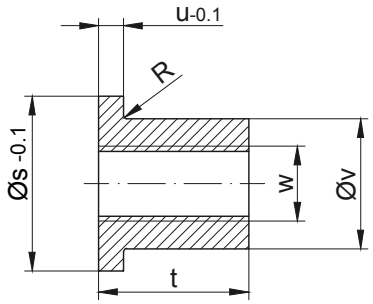

Material: Steel, tensile strength ≥ 470 N/mm²

* Position 4 Stud bolt

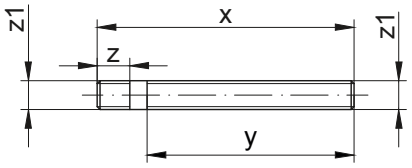

Material: Steel, tensile strength ≥ 1000 N/mm² Thread rolled

Type	Dimensions (mm)										* Retaining ring DIN 472	Hexagon nut DIN 394-8	Disc DIN 125-St	* Filister head screw DIN 912-8.8	Starting torque (Nm)	Hexagon bolt DIN EN 24017-8.8
	Position 3 Sleeve						Position 4 Stud bolt									
	s	t	u	v	w	R	x	y	z	z1	Pos.5	Pos.6	Pos.7	Pos.8		Pos.9
BF06	29.9	24	5	15.4	M12	0.8	160	130	20	M8	30x1.2	M8	8.4	M8x30	5	M12x110
BF10	30.4	28	5	19.8	M14	-	170	135	23	M10	30x1.2	M10	10.5	M10x30	8	M14x150
BF20	35.9	28	5	23	M14	-	180	145	23	M10	35x1.5	M10	10.5	M10x35		M14x160
BF30	40.9	40	6	27.7	M20	-	210	170	28	M12	40x1.75	M12	13	M12x35	16	M20x200
BF40	50.9	48	6	36	M24	0.8	230	175	37	M16	50x2.0	M16	17	M16x40	30	M24x210
BF50	60.9	60	6	44	M30	-	270	205	45	M20	60x2.0	M20	21	M20x50	42	M30x250
BF60	71.9	60	6	53	M30	0.8	310	240	45	M20	72x2.5	M20	21	M20x50		M20x280
BF70	85.9	60	8	65	M30	0.8	310	240	45	M20	85x3	M20	21	M20x50		M30x280
BF80	111.9	72	10	85	M36	0.8	440	360	55	M24	112x4	M24	25	M24x60	100	M36x410
BF90	131.4	72	10	95	M36	0.8	510	430	55	M24	130x4	M24	25	M24x60		M36x480

The parts shown are neccessary for assembly. ONLY * specified parts are enclosed in the assembly kit.
Suitable measures are to be used to secure Bolt Pos. 8 against loosening!

Optional

Type	Assembly tool „Holding“
BF06	Id.Nr. 4105125
BF10	Id.Nr. 4105133
BF20	Id.Nr. 4105141
BF30	Id.Nr. 4105150
BF40	Id.Nr. 4105168
BF50	Id.Nr. 4105176
BF60	Id.Nr. 4105184
BF70	Id.Nr. 4105192
BF80	Id.Nr. 4105206
BF90	Id.Nr. 4105214

BF-series shaft-mounted geared motors

Additional Dimension Sheet

Shaft Cap (VK)

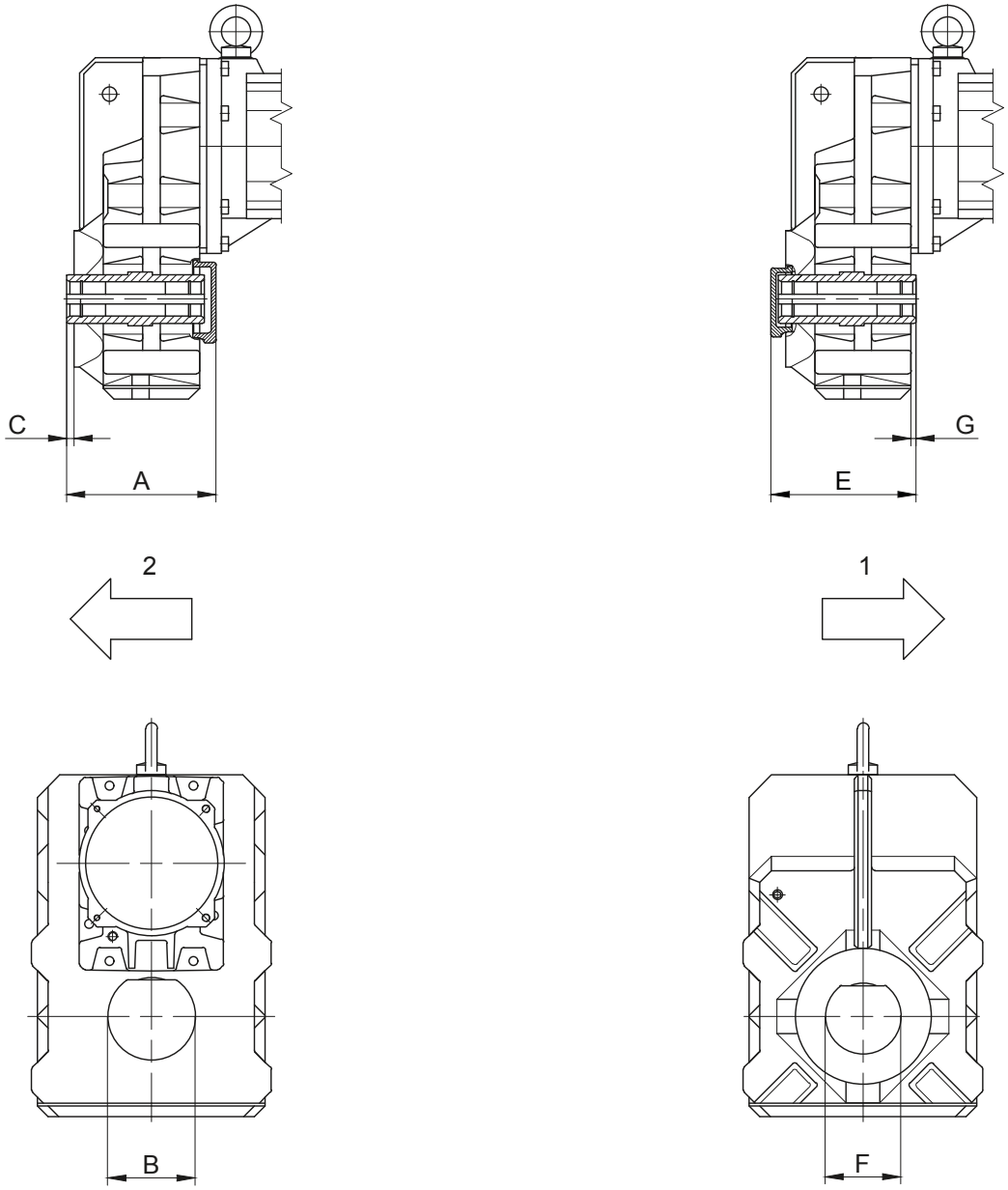

1 Gear side FRONT (V)
2 Gear side REAR (H)

Shaft cap REAR (H)			
Type	A	B	C
BF10	134	78	5
BF20	142	85	5
BF30	153.5	90	7.5
BF40	179.5	110	7
BF50	192	125	6
BF60	222	140	7
BF70	258	170	6
Dimensions in millimetres (mm)			

Shaft cap FRONT (V)			
Type	E	F	G
BF30	149	78	7.5
BF50	189.5	110	6
BF70	262	130	6
Dimensions in millimetres (mm)			

The actual gearbox design can vary from the geometry shown. Generate drive specific 3D and 2D geometries under www.BauerCat.com.

Shaft Cover (VD)

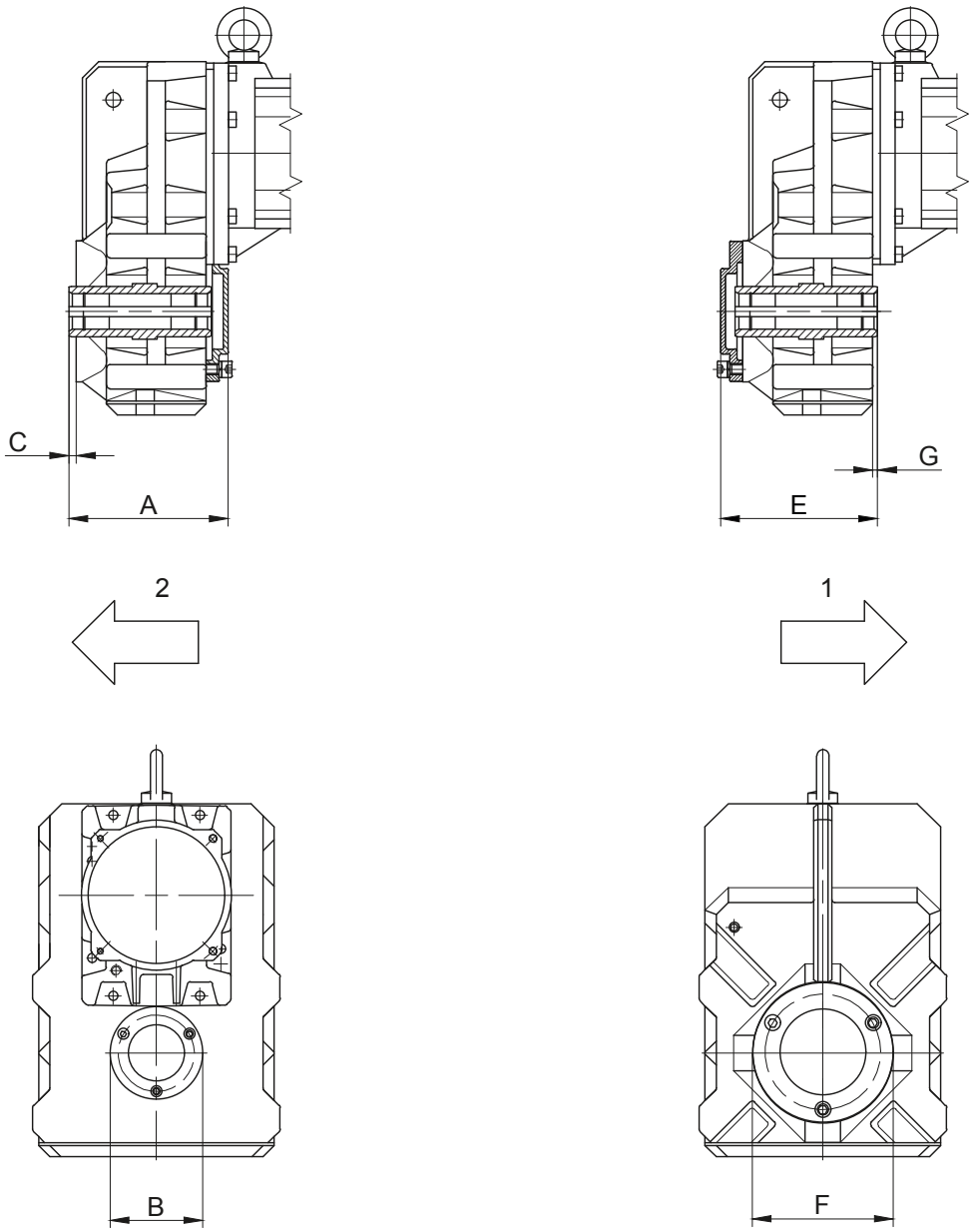

1 Gear side FRONT (V)
2 Gear side REAR (H)

Shaft cover REAR (H)			
Type	A	B	C
BF70	376	300	8
BF90	442	350	8
Dimensions in millimetres (mm)			

Shaft cover FRONT (V)			
Type	E	F	G
BF10	135.5	120	5
BF20	144	139.5	5
BF30	153	139.5	7.5
BF40	179.5	160	7
BF50	191.5	199	6
BF60	221.5	210	7
BF70	258	250	6
BF80	376	300	8
BF90	442	350	8
Dimensions in millimetres (mm)			

The actual gearbox design can vary from the geometry shown. Generate drive specific 3D and 2D geometries under www.BauerCat.com.

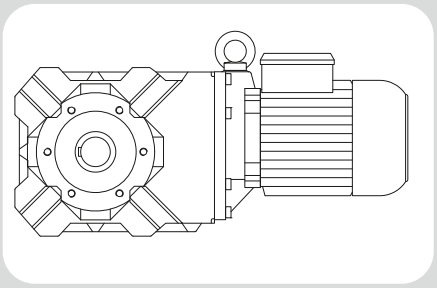

12

BK-series bevel-geared motors - Dimensions

Dimension - Standard **584**
BK06 584
BK08 586
BK10-BK10Z 588
BK17 590
BK20-BK20Z 592
BK30-BK30Z 594
BK40-BK40Z 596
BK50-BK50Z 598
BK60-BK60Z 600
BK70-BK70Z 602
BK80-BK80Z 604
BK90-BK90Z 606
Dimension - Tandem Gearbox **608**
BK10G06 608
BK20G06 610
BK30G06 612
BK40G10 614
BK50G10 616
BK60G20 618
BK70G20 620
BK80G40 622
BK90G50 624
Additional Dimension Sheet **627**
Splined shaft 627
Shrink disc couplings (SSV) 628
Shrink Disk Connection with Cover (SSV) 629
Rubber buffer for torque restraint 630
Position of the torque arm 631
Foot with tapped holes 632
Foot plate with clearance holes 633
Assembly tools for hollow shaft and keyway 634
Assembly tools for splined shaft 636
Shaft Cap (VK) 638
Shaft Cover (VD) 639

BK-series bevel-geared motors

Dimension - Standard

BK06

Flange with clearance holes at front

Code -3.V/

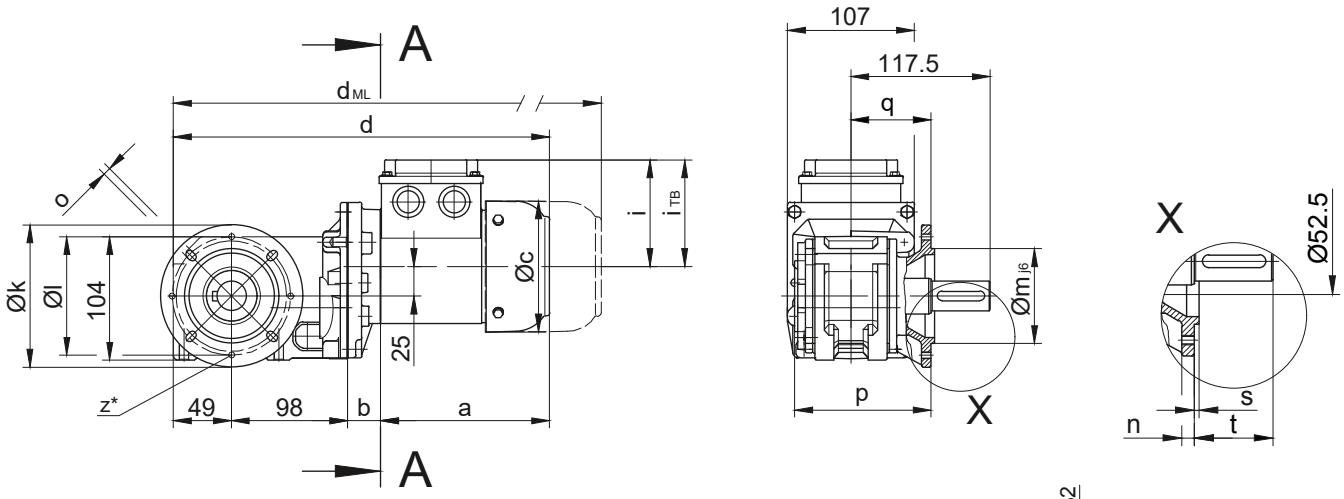

Code -.4/

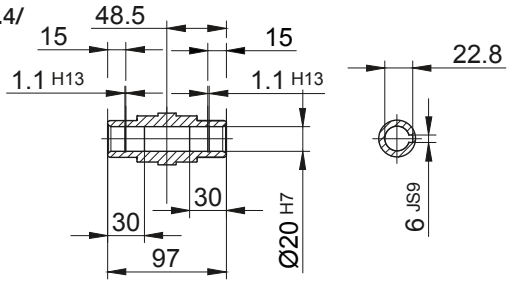

Code -.1/

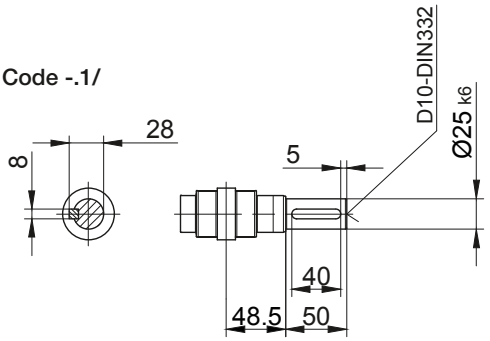

Code -.5/

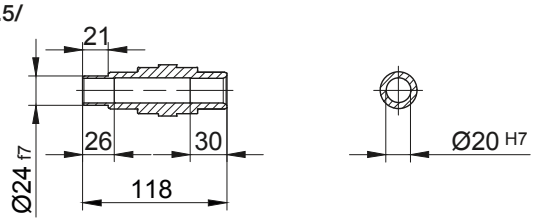

Code -.3/

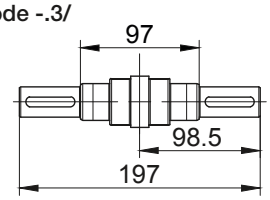

Standard

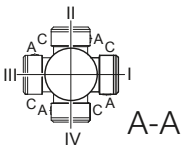

A-A

Code -.7/

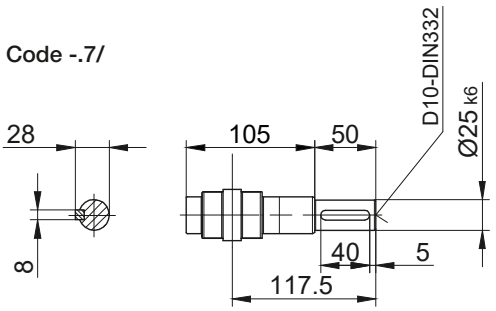

* optional 4xM6 for code -3.

Flange Dimensions										
Type	Design	k	l	m	n	o	p	q	s	t
BK06	Code -3.V/	120	100	80	8	6.6	115	67.5	3	50
Dimensions in millimetres (mm)										

Type	a	b	c	d	i	Design with motor extensions				
						i_{TB}	Brake	Encoder	Brake with Encoder	Back Stop
							d_{ML}	d_{ML}	d_{ML}	d_{ML}
BK06-../D04.A.	142.5	28	110.5	317.5	90	112	361	405	448.5	-
BK06-../D..05.A.	170.5	30	123	347.5	101.5	117	389.5	450	487.5	-
BK06-../D..06.A.	170.5	30	123	347.5	101.5	119	389.5	450	487.5	-
BK06-../D..07.A.	190.5	30	123	367.5	101.5	119	409.5	470	507.5	-
BK06-../D..08.A.	199.5	74	156	420.5	116	136.5	486.5	532.5	594	486.5
BK06-../D..08.B.	229.5	74	156	450.5	116	136.5	516.5	562.5	623.5	516.5
Dimensions in millimetres (mm)										

The actual gearbox design can vary from the geometry shown. Generate drive specific 3D and 2D geometries under www.BauerCat.com.

BK06

Torque arm at front
Code -5.V/

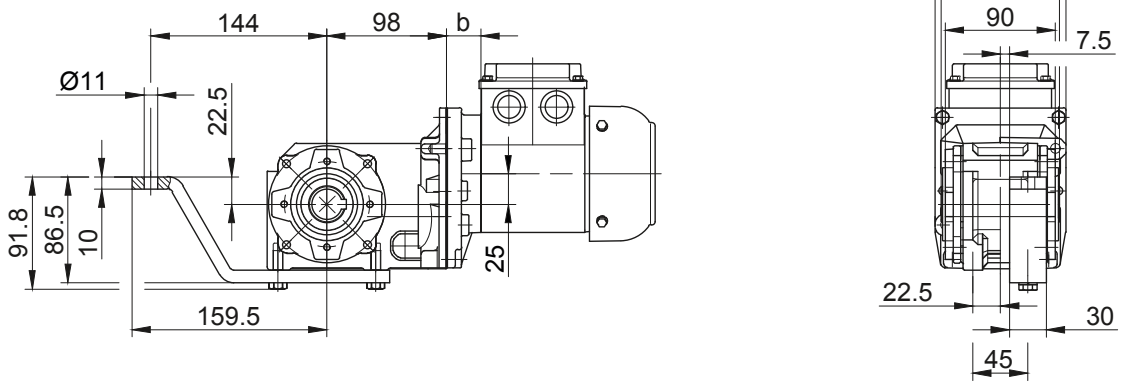

Flange with tapped holes at front
Code -7.V/

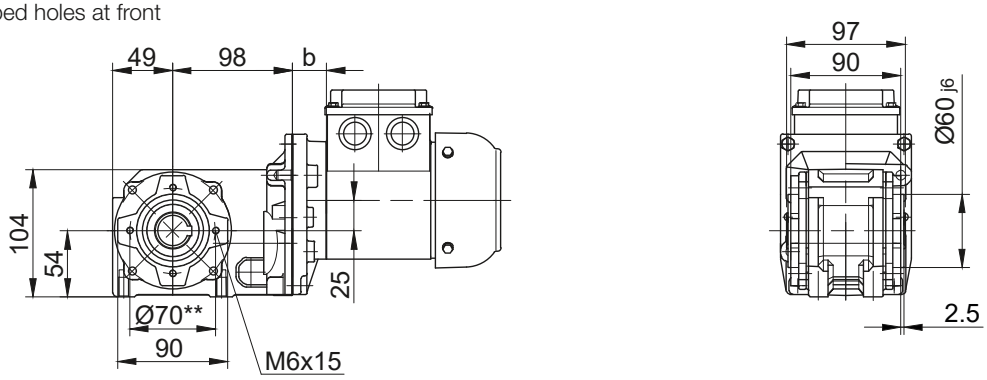

Foot with tapped holes at bottom
Code -6.U/

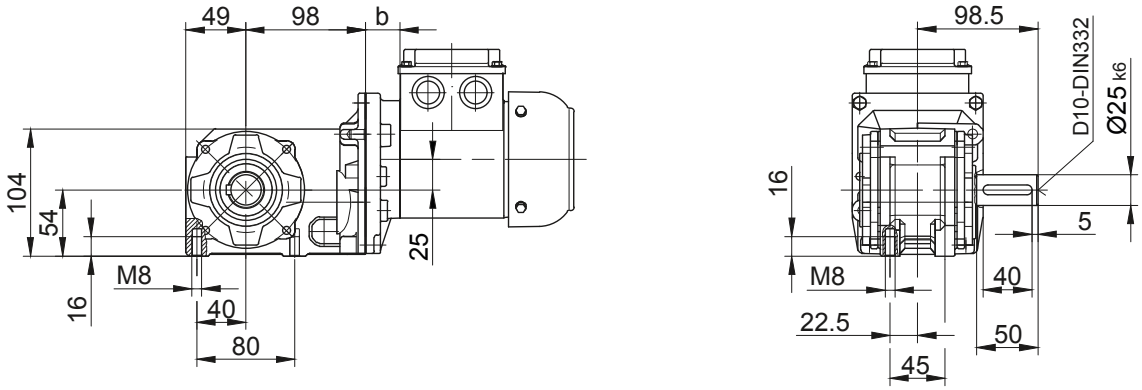

Foot with clearance holes at bottom
Code -1.U/

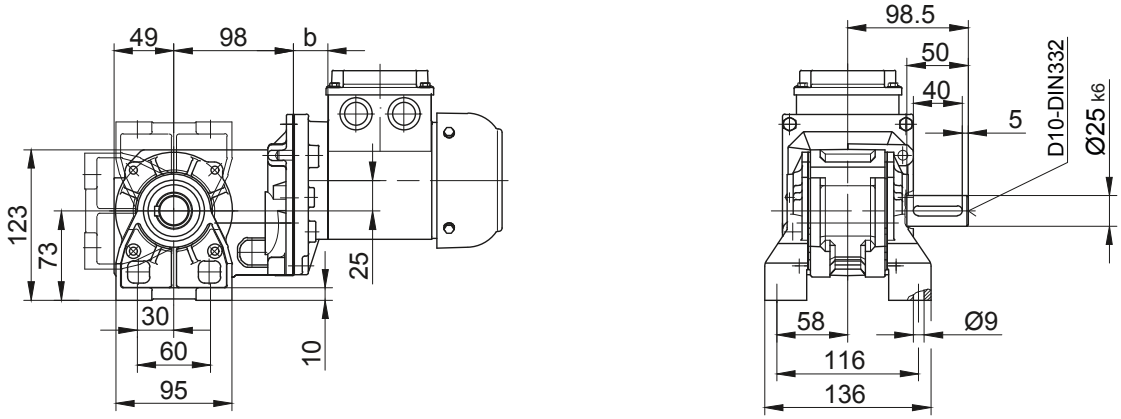

** not for D..08.. with PTO shaft (code -.1, -.2, -3., -.7, -.8, -.9)

The actual gearbox design can vary from the geometry shown. Generate drive specific 3D and 2D geometries under www.BauerCat.com.

BK-series bevel-geared motors

Dimension - Standard

BK08

Flange with clearance holes at front

Code -3.V/
(Code -2.V)

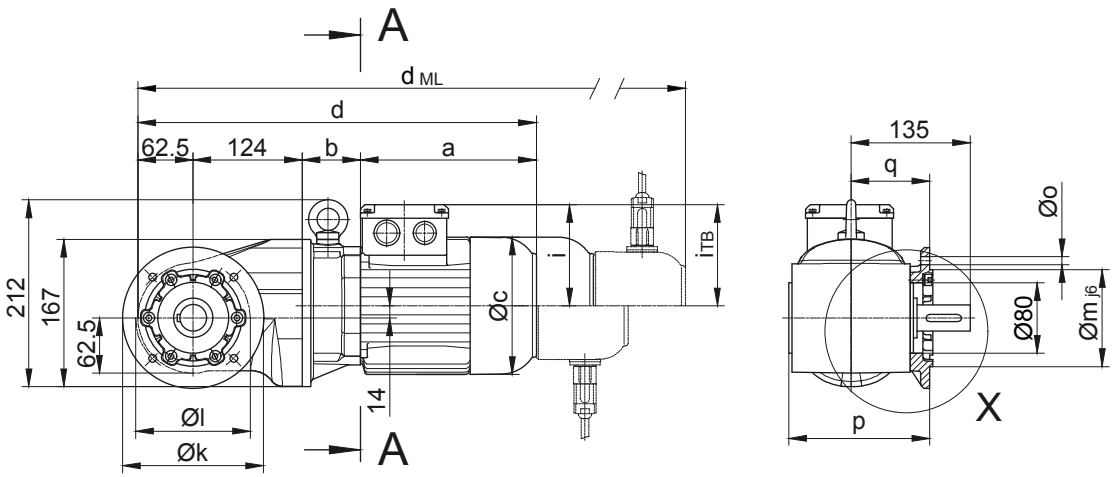

Code -.4/

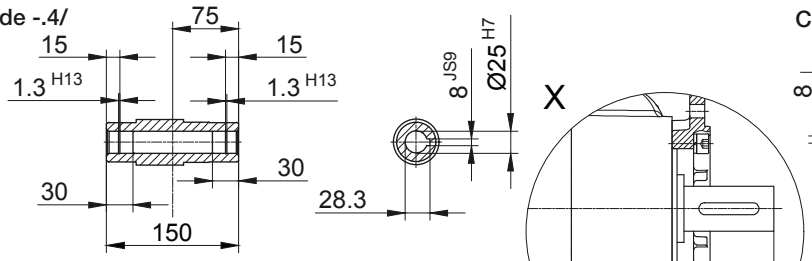

Code -.1/

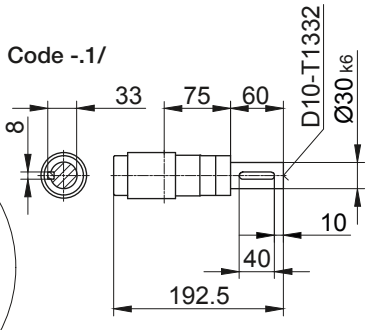

Code -.5/

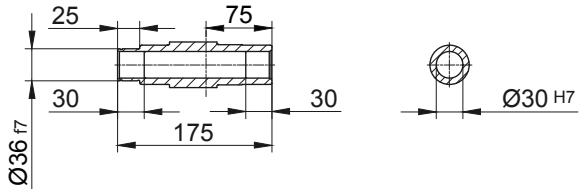

Code -.3/

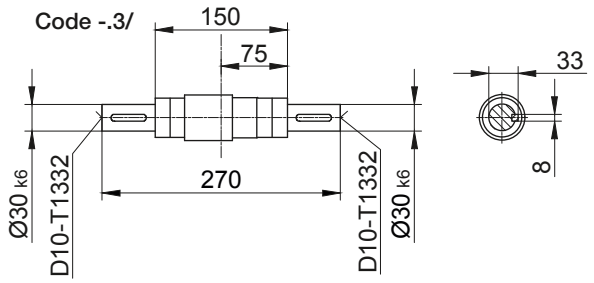

Code -.4/K30

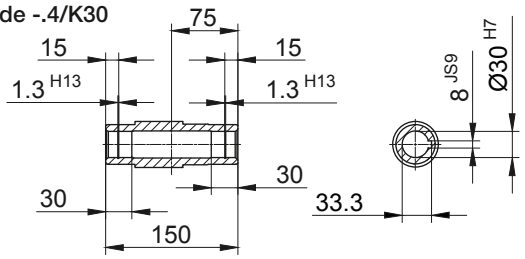

Code -.4/K35

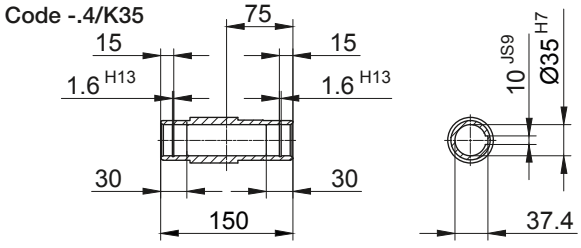

Standard

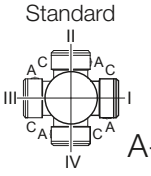

Flange Dimensions										
Type	Design	k	l	m	n	o	p	q	s	t
BK08	Code -3.V/	200	165	130	12	11	166.5	96	3.5	39
BK08	Code -2.V/	160	130	110	10	9	159.5	89	3.5	46
Dimensions in millimetres (mm)										

Type	a	b	c	d	i	Design with motor extensions				
						i_{TB}	Brake	Encoder	Brake with Encoder	Back Stop
							d_{ML}	d_{ML}	d_{ML}	d_{ML}
BK08-../D..08.A.	199.5	66	156	452	116	136.5	518	564	625.5	518
BK08-../D..08.B.	229.5	66	156	482	116	136.5	548	594	655	548
Dimensions in millimetres (mm)										

The actual gearbox design can vary from the geometry shown. Generate drive specific 3D and 2D geometries under www.BauerCat.com.

BK08

Torque arm at front

Code -5.V/

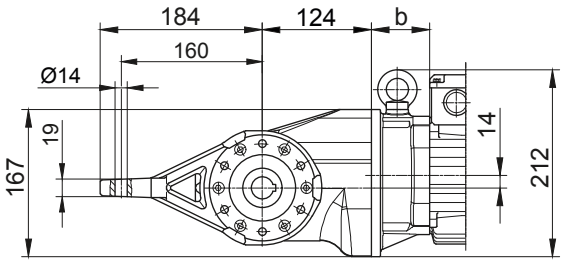

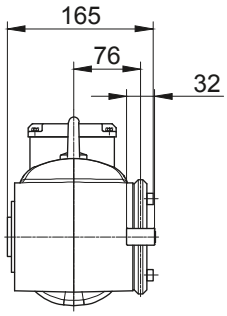

Flange with tapped holes at front

Code -7.V/

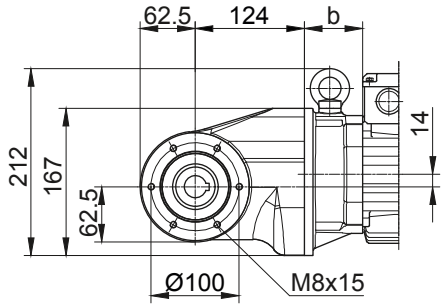

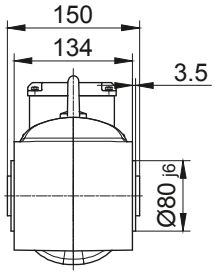

The actual gearbox design can vary from the geometry shown. Generate drive specific 3D and 2D geometries under www.BauerCat.com.

BK-series bevel-geared motors

Dimension - Standard

BK10-BK10Z

Flange with clearance holes at front

Code -3.V/

(Code -2.V/)

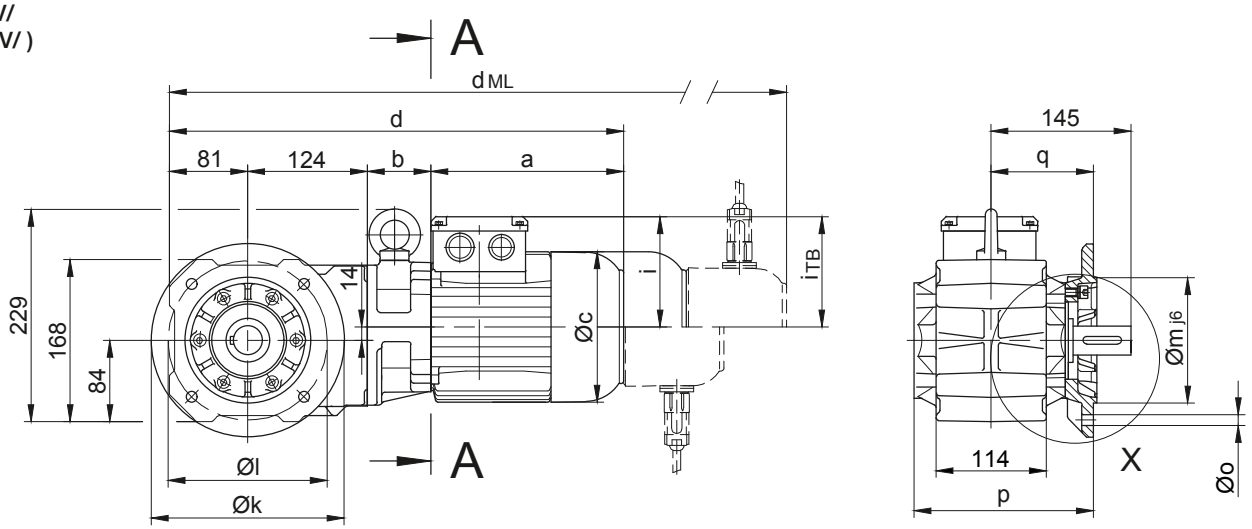

Code -.4/

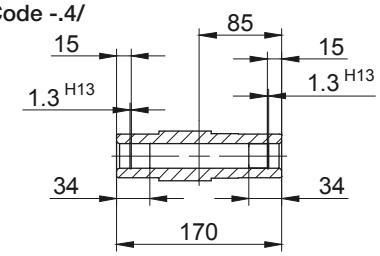

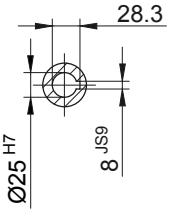

Code -.1/

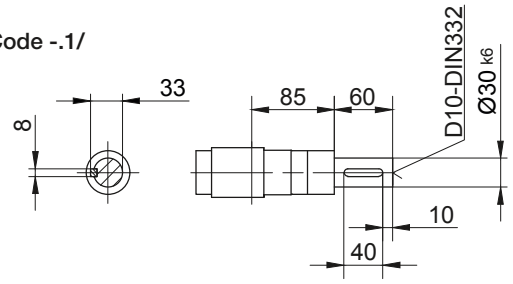

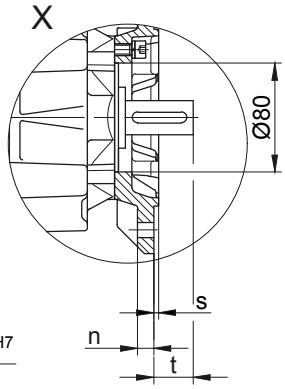

Code -.5/

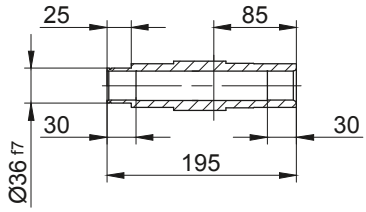

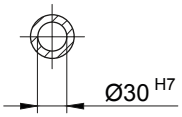

Code -.3/

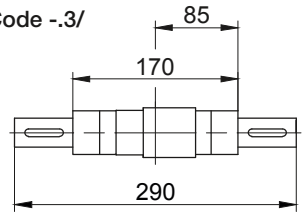

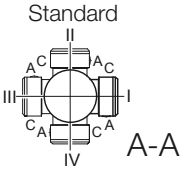

Flange Dimensions										
Type	Design	k	l	m	n	o	p	q	s	t
BK10..	Code -3.V/	200	165	130	12	11	186.5	106	3.5	39
BK10..	Code -2.V/	160	130	110	10	9	179.5	99	3.5	46
Dimensions in millimetres (mm)										

Type	a	b	c	d	i	Design with motor extensions				
						i_{TB}	Brake	Encoder	Brake with Encoder	Back Stop
							d_{ML}	d_{ML}	d_{ML}	d_{ML}
BK10Z-../D04.A.	142.5	86	110.5	433.5	90	112	477	521	564.5	-
BK10-../D..05.A.	170.5	62	123	437.5	101.5	117	479.5	540	577.5	-
BK10Z-../D..05.A.	170.5	88	123	463.5	101.5	117	505.5	566	603.5	-
BK10-../D..06.A.	170.5	62	123	437.5	101.5	119	479.5	540	577.5	-
BK10Z-../D..06.A.	170.5	88	123	463.5	101.5	119	505.5	566	603.5	-
BK10-../D..07.A.	190.5	62	123	457.5	101.5	119	499.5	560	597.5	-
BK10Z-../D..07.A.	190.5	88	123	483.5	101.5	119	525.5	586	623.5	-
BK10-../D..08.A.	199.5	66	156	470.5	116	136.5	536.5	582.5	644	536.5
BK10Z-../D..08.A.	199.5	132	156	536.5	116	136.5	602.5	648.5	710	602.5
BK10-../D..08.B.	229.5	66	156	500.5	116	136.5	566.5	612.5	673.5	566.5
BK10Z-../D..08.B.	229.5	132	156	566.5	116	136.5	632.5	678.5	739.5	632.5
BK10-../D..09.A.	250.5	80.5	176	536	125.5	157	629	643.5	733	629
BK10-../D..09.B.	308.5	80.5	176	594	125.5	157	687	701	791	687
Dimensions in millimetres (mm)										

The actual gearbox design can vary from the geometry shown. Generate drive specific 3D and 2D geometries under www.BauerCat.com.

BK10-BK10Z

Torque arm at front

Code -5.V/

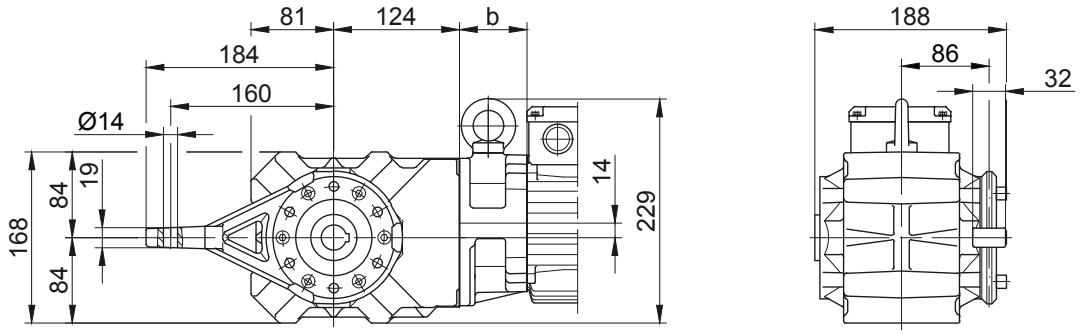

Flange with tapped holes at front

Code -7.V/

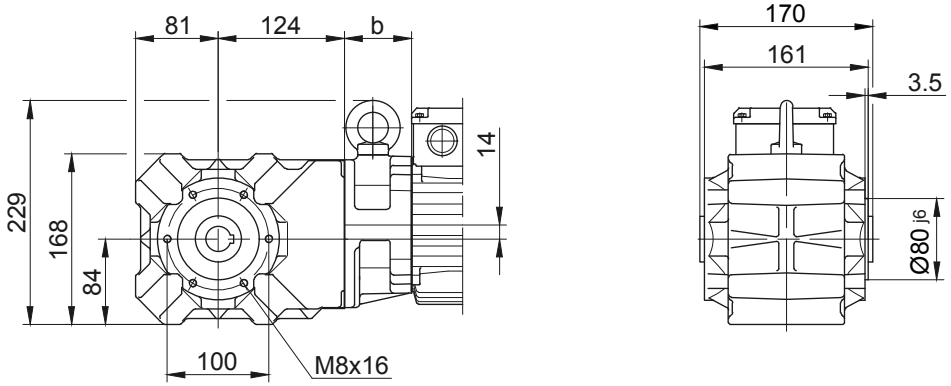

Foot with tapped holes at bottom

Code -6.U/

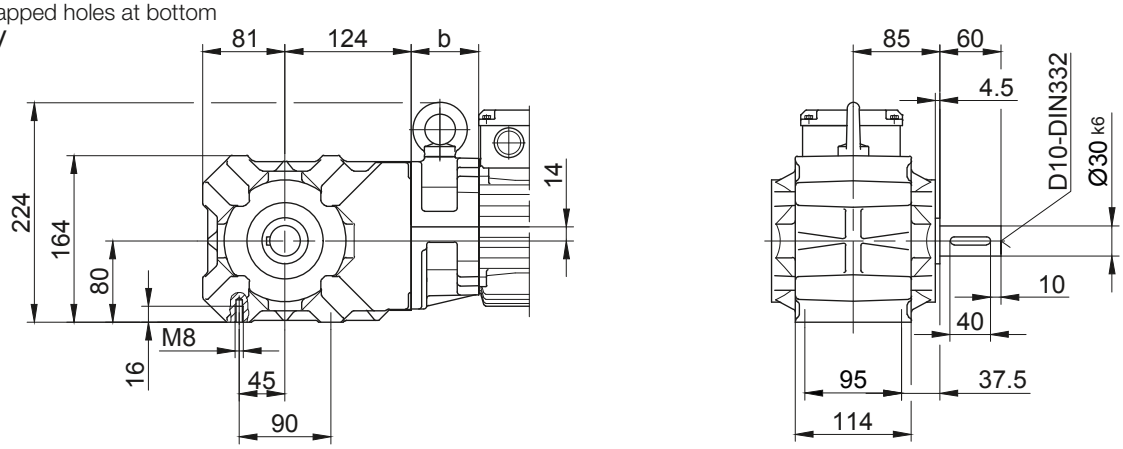

Foot with clearance holes at bottom

Code -1.U/

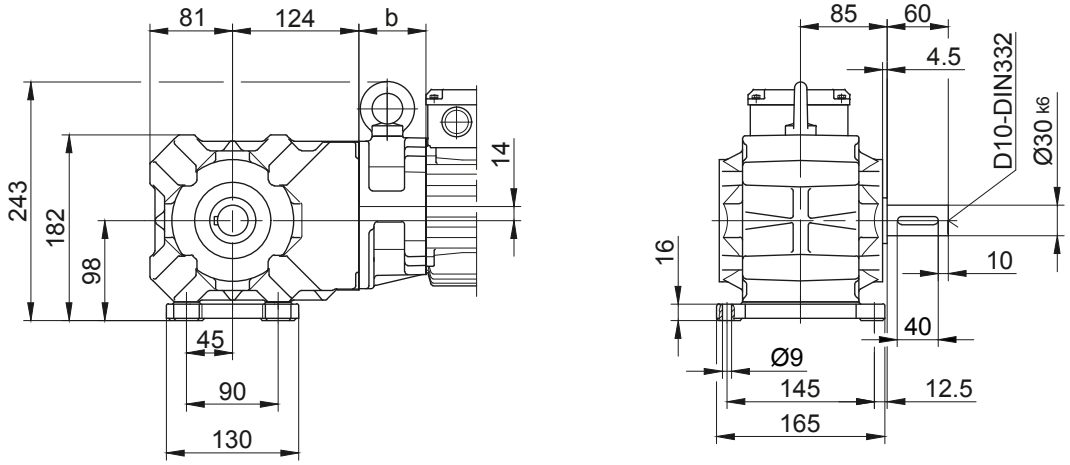

The actual gearbox design can vary from the geometry shown. Generate drive specific 3D and 2D geometries under www.BauerCat.com.

BK-series bevel-geared motors

Dimension - Standard

BK17

Flange with clearance holes at front

Code -3.V/
(Code -2.V)

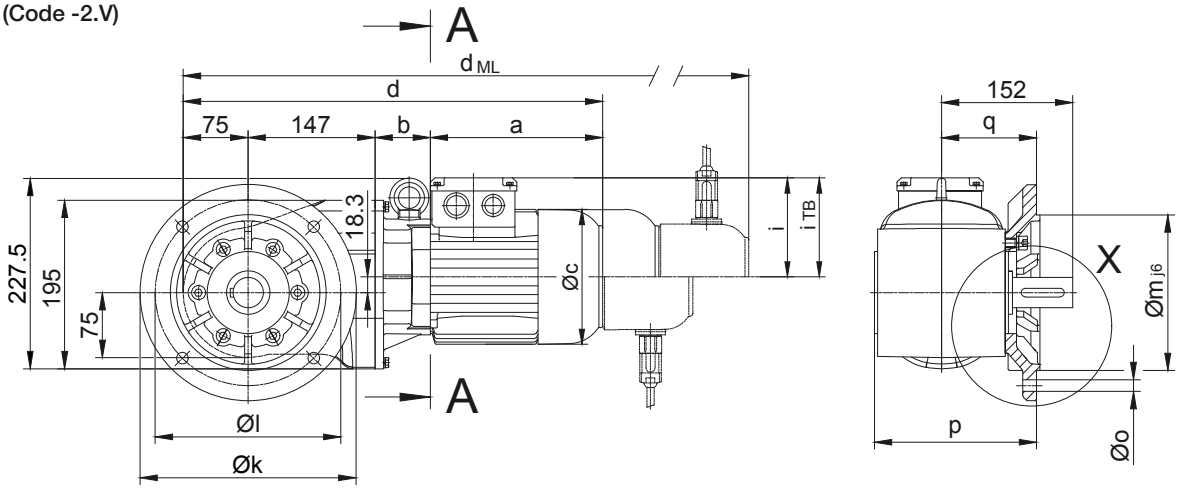

Code -.4/

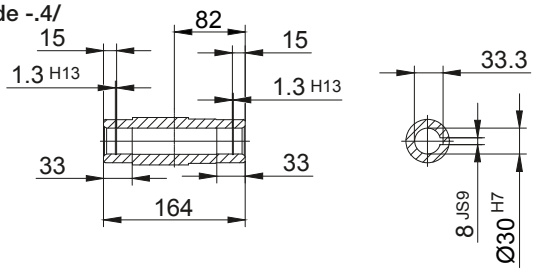

Code -.1/

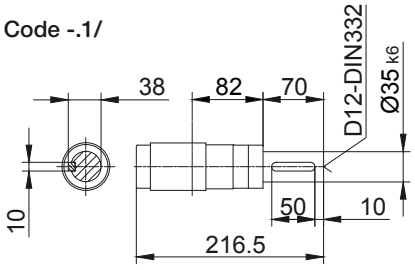

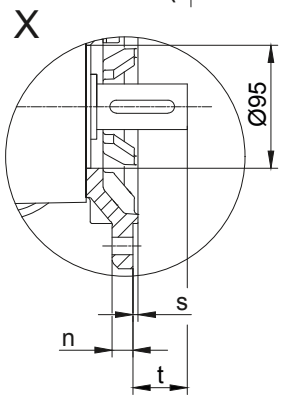

Code -.5/

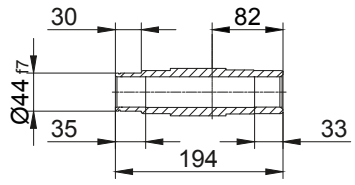

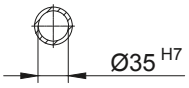

Code -.3/

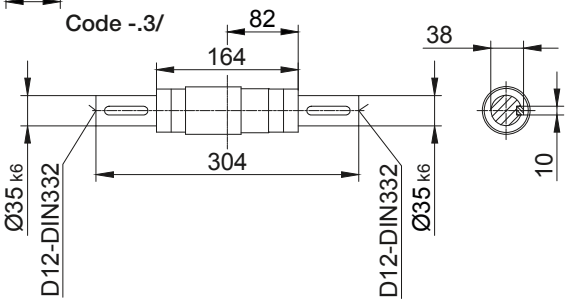

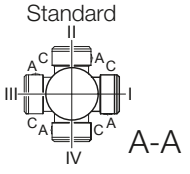

Flange Dimensions										
Type	Design	k	l	m	n	o	p	q	s	t
BK17	Code -3.V/	250	215	180	16	13.5	187.5	110	4	42.5
BK17	Code -2.V/	200	165	130	12	11	178.5	101	3.5	51
Dimensions in millimetres (mm)										

Type	a	b	c	d	i	Design with motor extensions				
						i_{TB}	Brake	Encoder	Brake with Encoder	Back Stop
							d_{ML}	d_{ML}	d_{ML}	d_{ML}
BK17-../D..08.A.	199.5	64	156	485.5	116	136.5	551.5	597.5	659	568
BK17-../D..08.B.	229.5	64	156	515.5	116	136.5	581.5	627.5	688.5	598
BK17-../D..09.A.	250.5	78.5	176	551	125.5	157	644	658.5	748	629.5
BK17-../D..09.B.	308.5	78.5	176	609	125.5	157	702	716	806	687.5
Dimensions in millimetres (mm)										

The actual gearbox design can vary from the geometry shown. Generate drive specific 3D and 2D geometries under www.BauerCat.com.

BK17

Torque arm at front

Code -5.V/

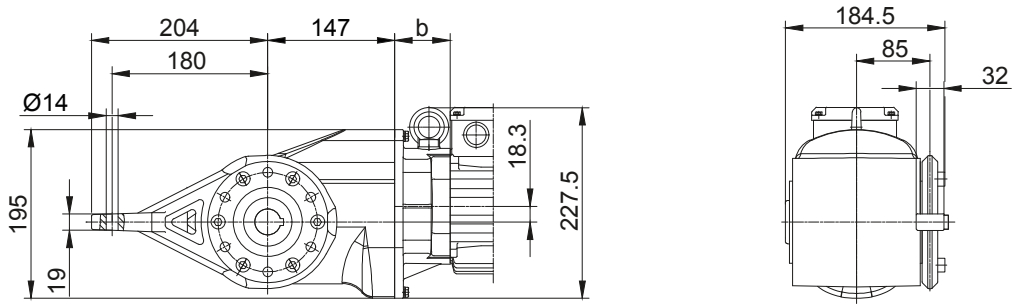

Flange with tapped holes at front

Code -7.V/

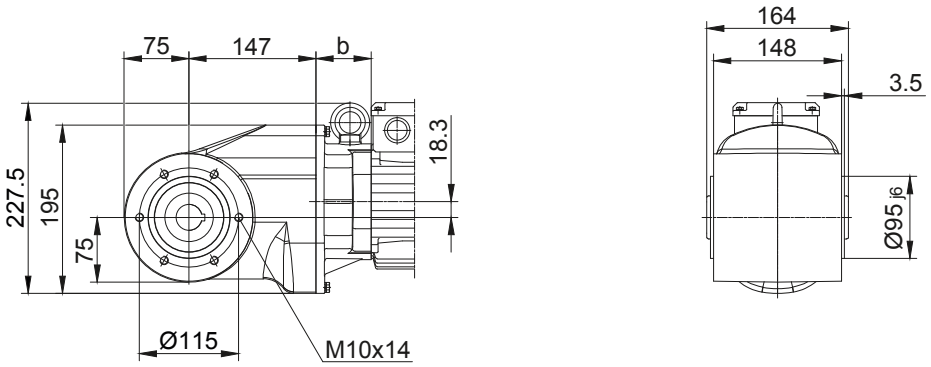

Code -.4/K35

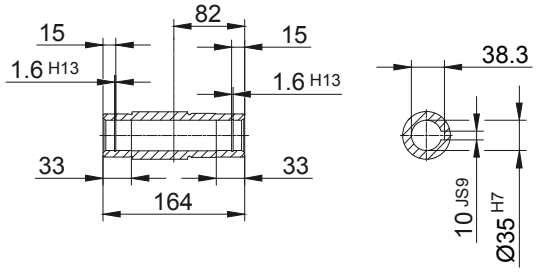

Code -.4/K40

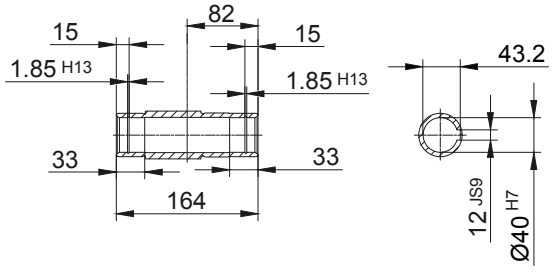

BK-series bevel-geared motors

Dimension - Standard

BK20-BK20Z

Flange with clearance holes at front
Code -3.V/
(Code -2.V/)

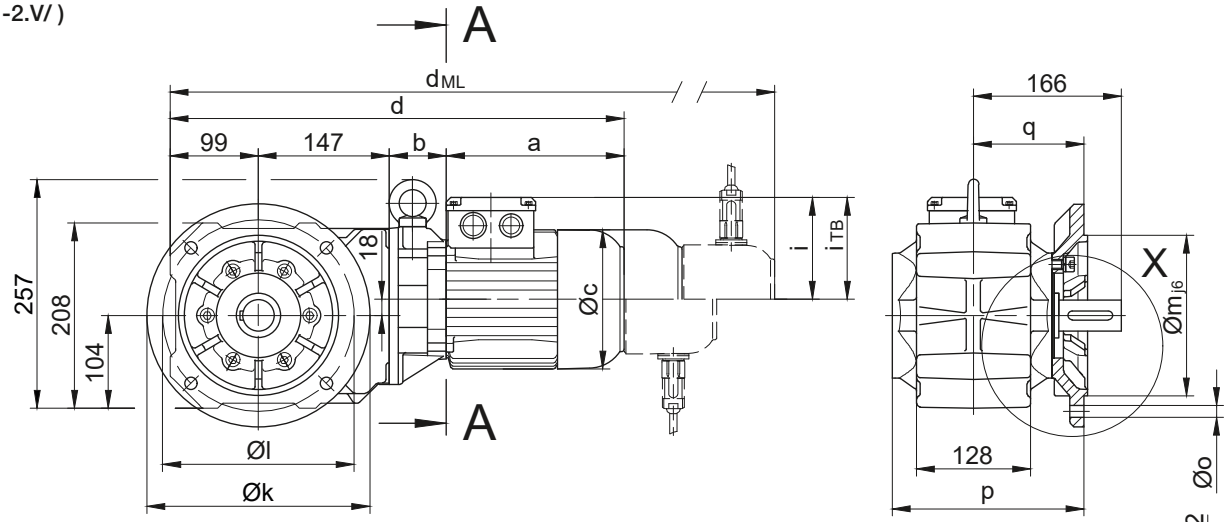

Code -.4/

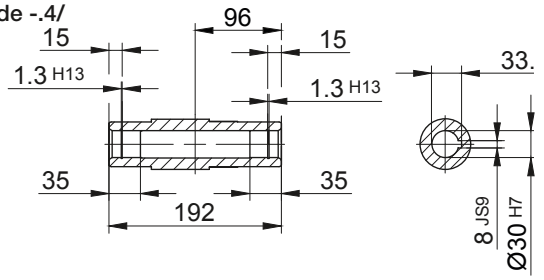

Code -.1/

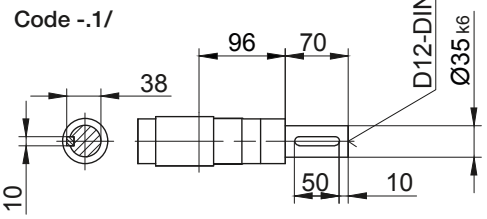

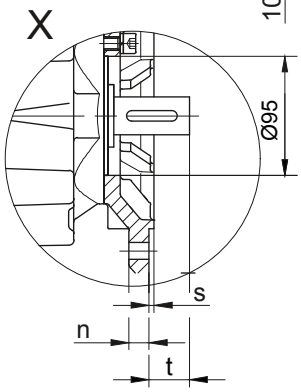

Code -.5/

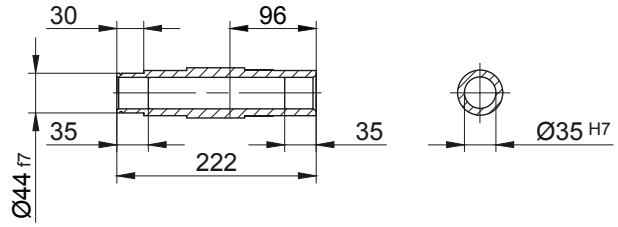

Code -.3/

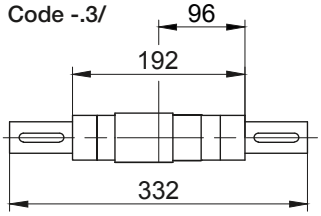

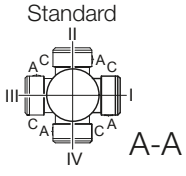

Flange Dimensions										
Type	Design	k	l	m	n	o	p	q	s	t
BK20..	Code -3.V/	250	215	180	16	13.5	215.5	124	4	42.5
BK20..	Code -2.V/	200	165	130	12	11	206.5	115	3.5	51
Dimensions in millimetres (mm)										

Type	a	b	c	d	i	Design with motor extensions				
						i_{TB}	Brake	Encoder	Brake with Encoder	Back Stop
							d_{ML}	d_{ML}	d_{ML}	d_{ML}
BK20Z-../D04.A.	142.5	100	110.5	488.5	90	112	532	576	619.5	-
BK20-../D..05.A.	170.5	60	123	476.5	101.5	117	518.5	579	616.5	-
BK20Z-../D..05.A.	170.5	102	123	518.5	101.5	117	560.5	621	658.5	-
BK20-../D..06.A.	170.5	60	123	476.5	101.5	119	518.5	579	616.5	-
BK20Z-../D..06.A.	170.5	102	123	518.5	101.5	119	560.5	621	658.5	-
BK20-../D..07.A.	190.5	60	123	496.5	101.5	119	538.5	599	636.5	-
BK20Z-../D..07.A.	190.5	102	123	538.5	101.5	119	580.5	641	678.5	-
BK20-../D..08.A.	199.5	64	156	509.5	116	136.5	575.5	621.5	683	575.5
BK20Z-../D..08.A.	199.5	146	156	591.5	116	136.5	657.5	703.5	765	657.5
BK20-../D..08.B.	229.5	64	156	539.5	116	136.5	605.5	651.5	712.5	605.5
BK20Z-../D..08.B.	229.5	146	156	621.5	116	136.5	687.5	733.5	794.5	687.5
BK20-../D..09.A.	250.5	78.5	176	575	125.5	157	741.5	682.5	772	668
BK20-../D..09.B.	308.5	78.5	176	633	125.5	157	620	740	830	726
Dimensions in millimetres (mm)										

The actual gearbox design can vary from the geometry shown. Generate drive specific 3D and 2D geometries under www.BauerCat.com.

BK20-BK20Z

Torque arm at front

Code -5.V/

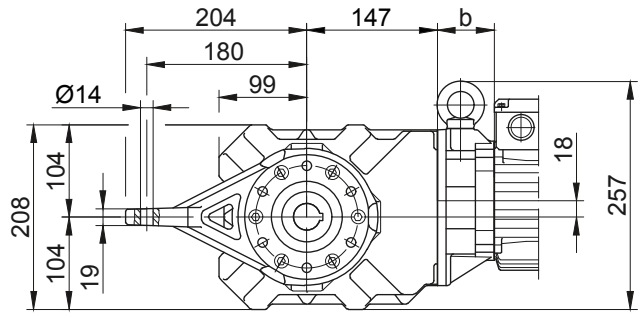

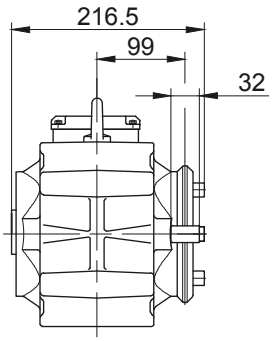

Flange with tapped holes at front

Code -7.V/

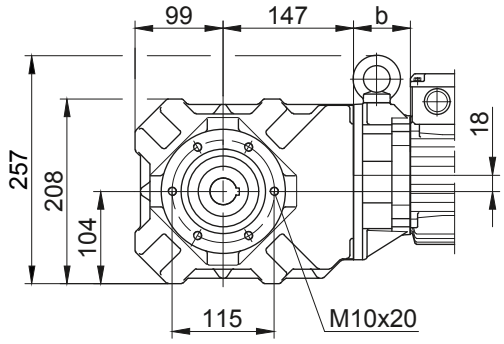

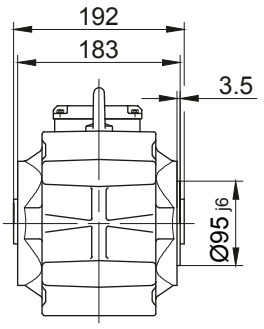

Foot with tapped holes at bottom

Code -6.U/

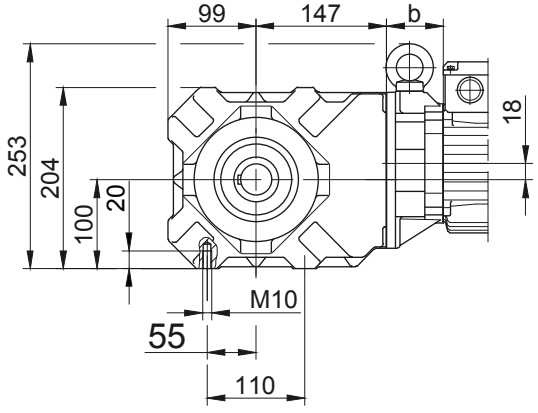

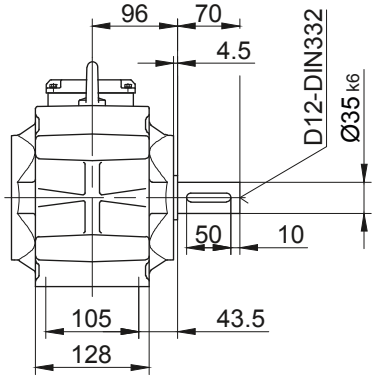

Foot with clearance holes at bottom

Code -1.U/

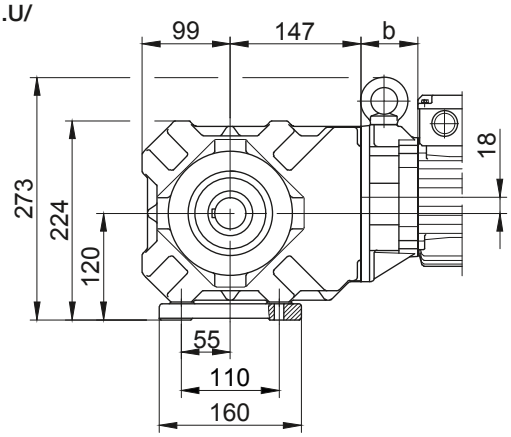

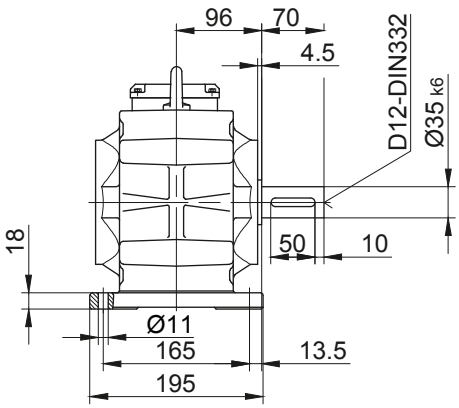

12

The actual gearbox design can vary from the geometry shown. Generate drive specific 3D and 2D geometries under www.BauerCat.com.

BK-series bevel-geared motors

Dimension - Standard

BK30-BK30Z

Flange with clearance holes at front

Code -3.V/
(Code -2.V/)

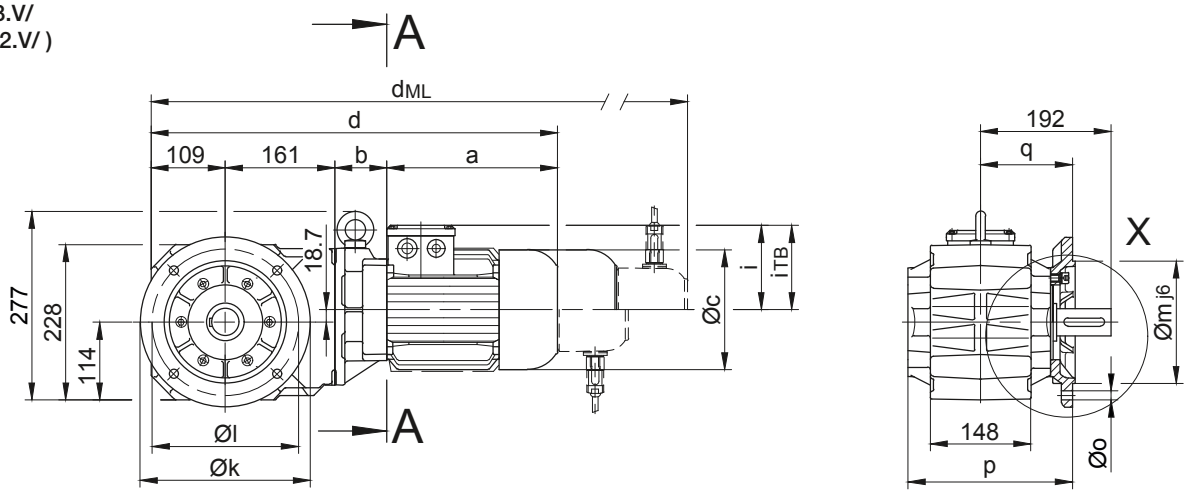

Code -.4/

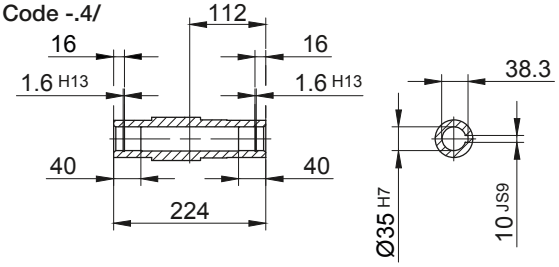

Code -.1/

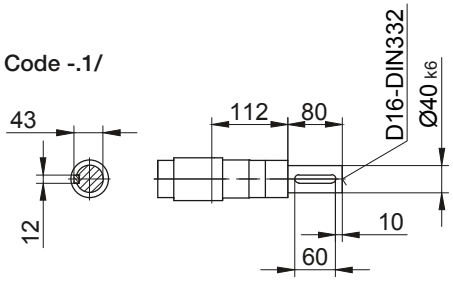

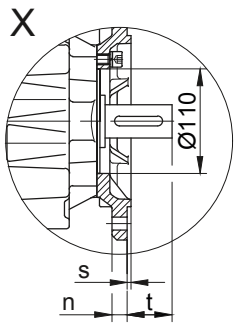

Code -.5/

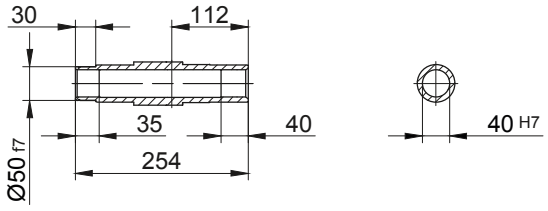

Code -.3/

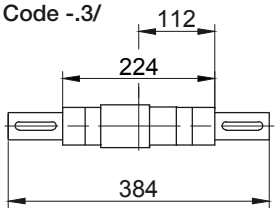

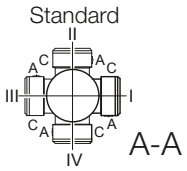

Flange Dimensions										
Type	Design	k	l	m	n	o	p	q	s	t
BK30..	Code -3.V/	250	215	180	16	13.5	242	135	4	57
BK30..	Code -2.V/	200	165	130	12	11	239	132	3.5	59.5
Dimensions in millimetres (mm)										

Type	a	b	c	d	i	Design with motor extensions				
						i_{TB}	Brake	Encoder	Brake with Encoder	Back Stop
							d_{ML}	d_{ML}	d_{ML}	d_{ML}
BK30-../D..05.A.	170.5	58	123	498.5	101.5	117	540.5	601	638.5	-
BK30Z-../D..05.A.	170.5	133.5	123	574	101.5	117	616	676.5	714	-
BK30-../D..06.A.	170.5	58	123	498.5	101.5	119	540.5	601	638.5	-
BK30Z-../D..06.A.	170.5	133.5	123	574	101.5	119	616	676.5	714	-
BK30-../D..07.A.	190.5	58	123	518.5	101.5	119	560.5	621	658.5	-
BK30Z-../D..07.A.	190.5	133.5	123	594	101.5	119	636	696.5	734	-
BK30-../D..08.A.	199.5	62	156	531.5	116	136.5	597.5	643.5	705	597.5
BK30Z-../D..08.A.	199.5	137.5	156	607	116	136.5	673	719	780.5	673
BK30-../D..08.B.	229.5	62	156	561.5	116	136.5	627.5	673.5	734.5	627.5
BK30Z-../D..08.B.	229.5	137.5	156	637	116	136.5	703	749	810	703
BK30-../D..09.A.	250.5	76.5	176	597	125.5	157	690	704.5	794	690
BK30Z-../D..09.A.	250.5	152	176	672.5	125.5	157	765.5	780	869.5	765.5
BK30-../D..09.B.	308.5	76.5	176	655	125.5	157	748	762	852	748
BK30Z-../D..09.B.	308.5	152	176	730.5	125.5	157	823.5	837.5	927.5	823.5
BK30-../D..11.A.	319	83	218	672	165	176	770	779.5	872	770
BK30-../D..11.B.	387	83	218	740	165	176	836	847.5	940	836
Dimensions in millimetres (mm)										

The actual gearbox design can vary from the geometry shown. Generate drive specific 3D and 2D geometries under www.BauerCat.com.

BK30-BK30Z

Torque arm at front
Code -5.V/

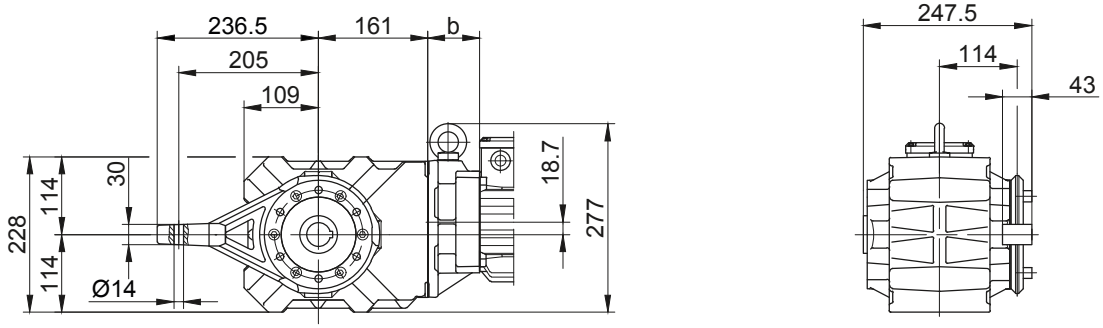

Flange with tapped holes at front
Code -7.V/

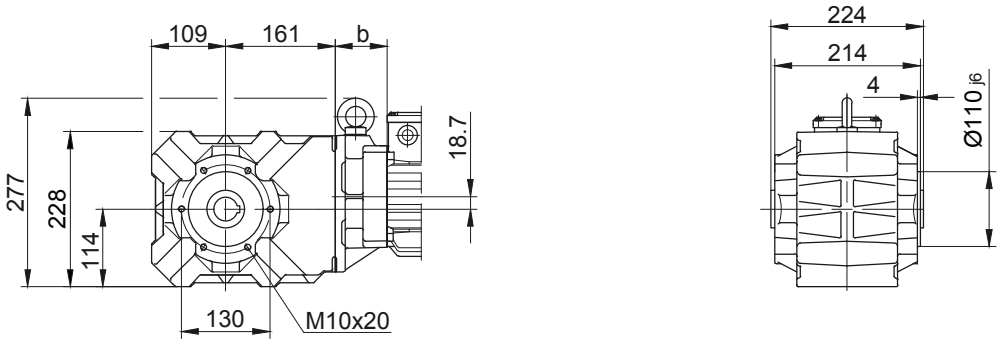

Foot with tapped holes at bottom
Code -6.U/

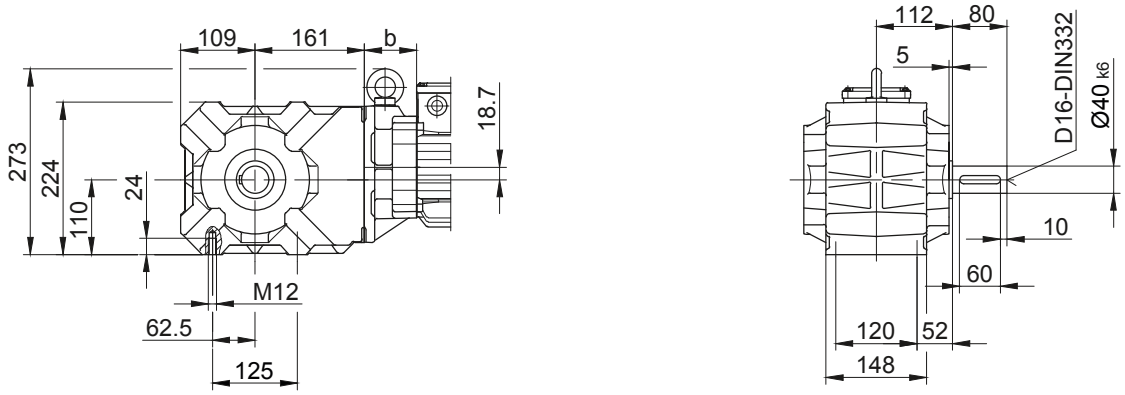

Foot with clearance holes at bottom
Code -1.U/

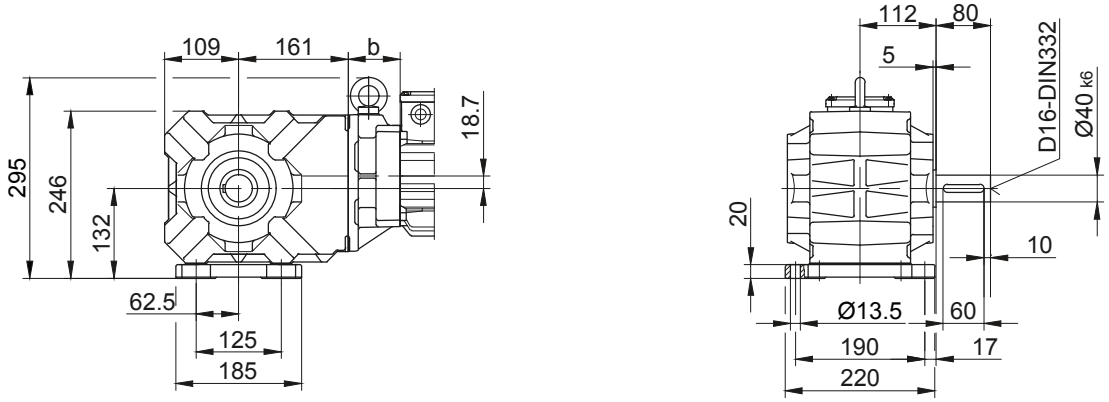

BK-series bevel-geared motors

Dimension - Standard

BK40-BK40Z

Flange with clearance holes at front

Code -3.V/
(Code -4.V/)

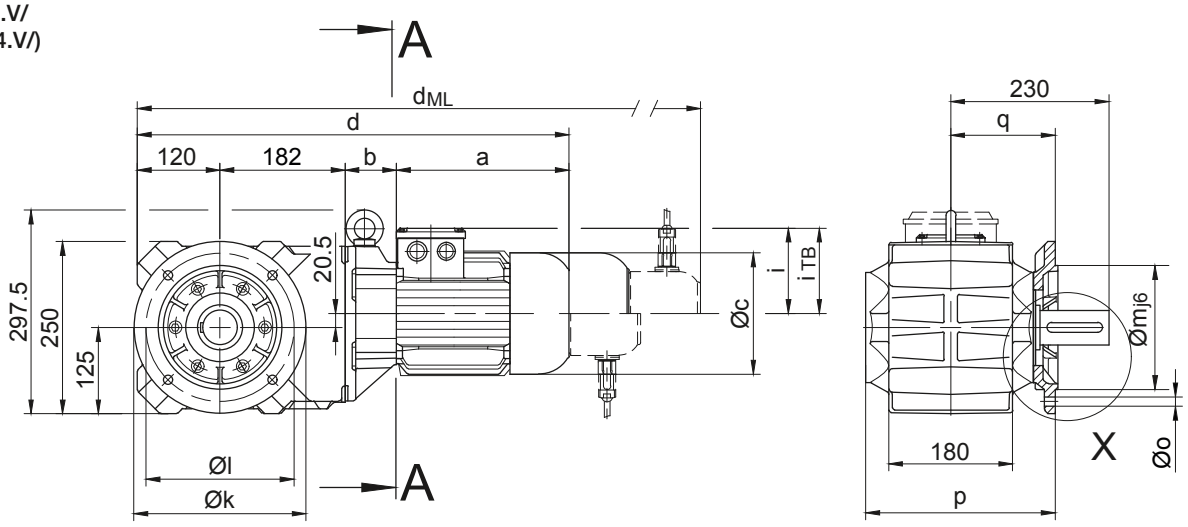

Code -.4/

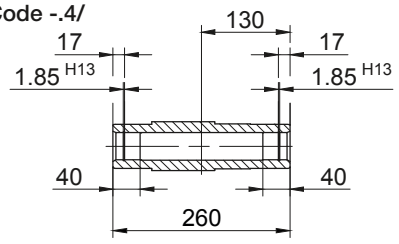

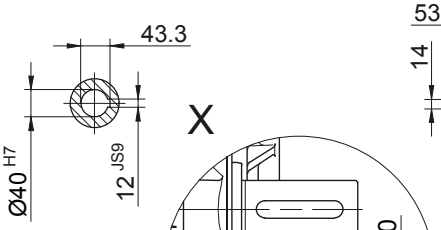

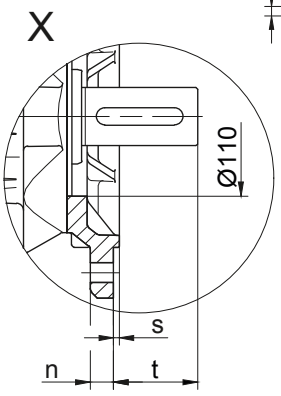

Code -.1/

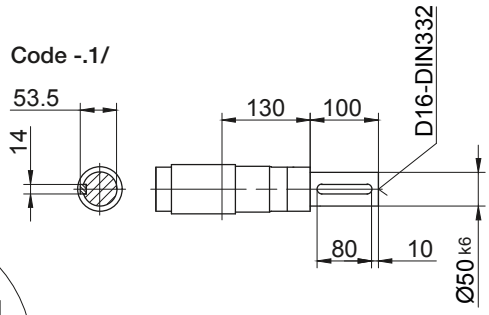

Code -.5/

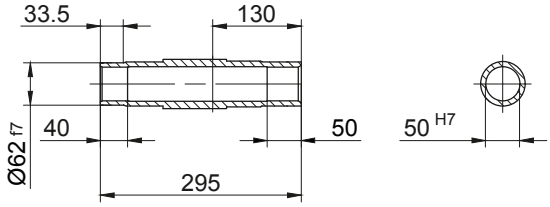

Code -.3/

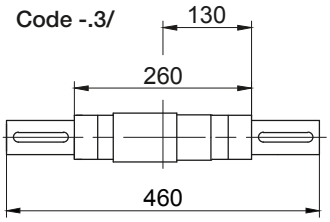

Flange Dimensions										
Type	Design	k	l	m	n	o	p	q	s	t
BK40..	Code -3.V/	250	215	180	16	13.5	276	152	4	78
BK40..	Code -4.V/	300	265	230	20	13.5	282	158	4	72
Dimensions in millimetres (mm)										

Standard

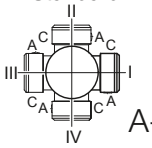

Type	a	b	c	d	i	Design with motor extensions				
						i_{TB}	Brake	Encoder	Brake with Encoder	Back Stop
							d_{ML}	d_{ML}	d_{ML}	d_{ML}
BK40Z-../D..05.A.	170.5	138.5	123	611	101.5	117	653	713.5	751	-
BK40Z-../D..06.A.	170.5	138.5	123	611	101.5	119	653	713.5	751	-
BK40Z-../D..07.A.	190.5	138.5	123	631	101.5	119	673	733.5	771	-
BK40-../D..08.A.	199.5	60	156	561.5	116	136.5	627.5	673.5	735	627.5
BK40Z-../D..08.A.	199.5	142.5	156	644	116	136.5	710	756	817.5	710
BK40-../D..08.B.	229.5	60	156	591.5	116	136.5	657.5	703.5	764.5	657.5
BK40Z-../D..08.B.	229.5	142.5	156	674	116	136.5	740	786	847	740
BK40-../D..09.A.	250.5	74.5	176	627	125.5	157	720	734.5	824	720
BK40Z-../D..09.A.	250.5	157	176	709.5	125.5	157	802.5	817	906.5	802.5
BK40-../D..09.B.	308.5	74.5	176	685	125.5	157	778	792	882	778
BK40Z-../D..09.B.	308.5	157	176	767.5	125.5	157	860.5	874.5	964.5	860.5
BK40-../D..11.A.	319	81	218	702	165	176	800	809.5	902	800
BK40-../D..11.B.	387	81	218	770	165	176	866	877.5	970	866
Dimensions in millimetres (mm)										

The actual gearbox design can vary from the geometry shown. Generate drive specific 3D and 2D geometries under www.BauerCat.com.

BK40-BK40Z

Torque arm at front

Code -5.V/

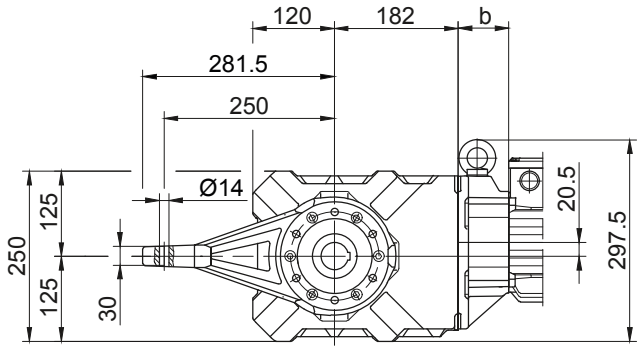

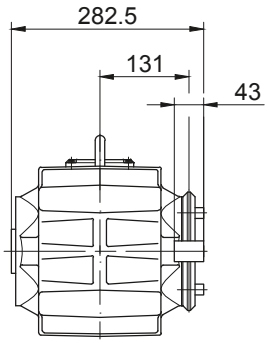

Flange with tapped holes at front

Code -7.V/

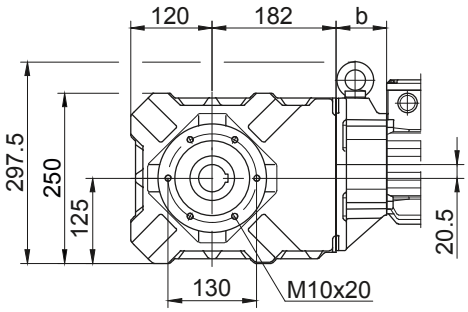

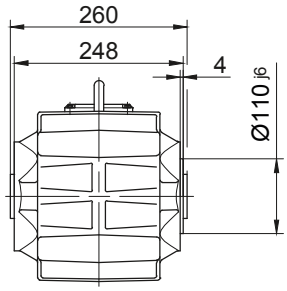

Foot with tapped holes at bottom

Code -6.U/

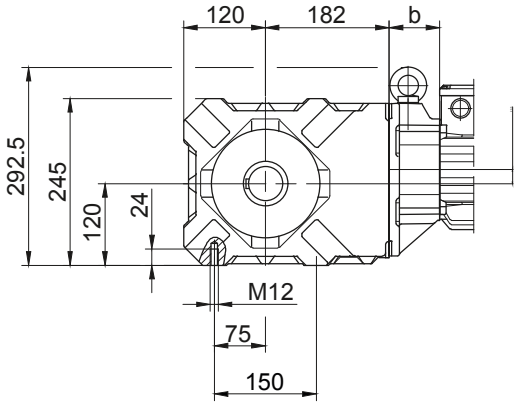

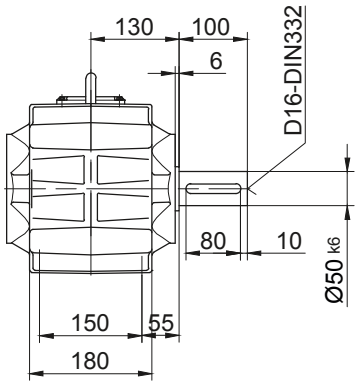

Foot with clearance holes at bottom

Code -1.U/

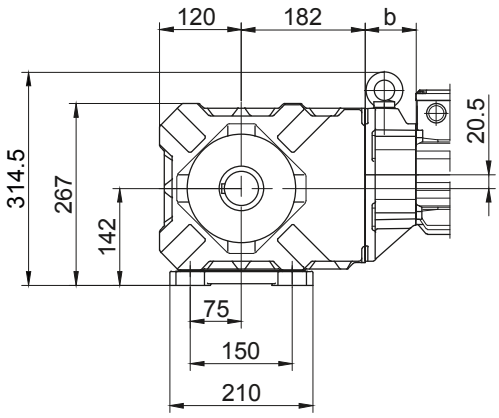

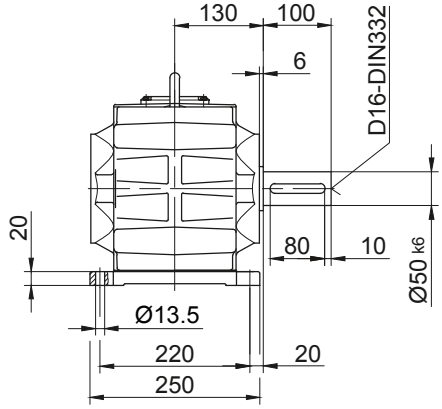

BK-series bevel-geared motors

Dimension - Standard

BK50-BK50Z

Flange with clearance holes at front
Code -3.V/
(Code -2.V/)

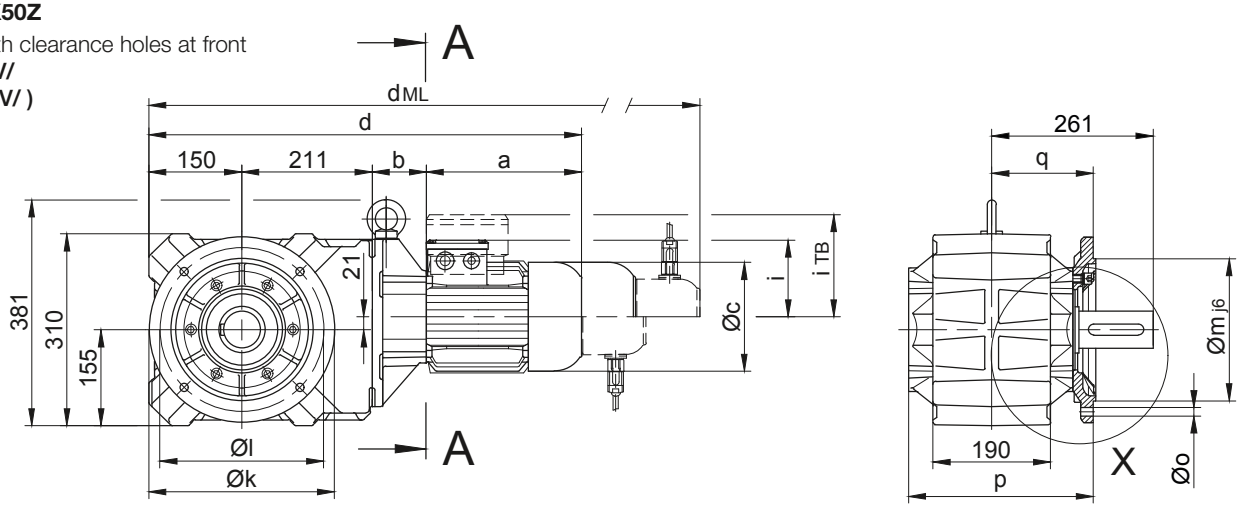

Code -.4/

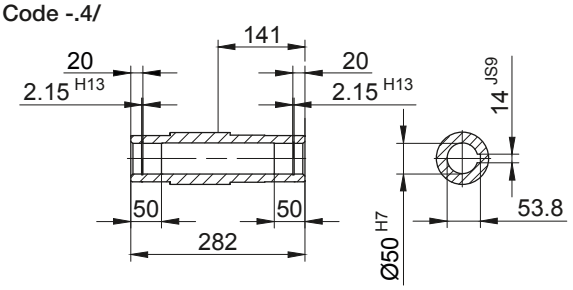

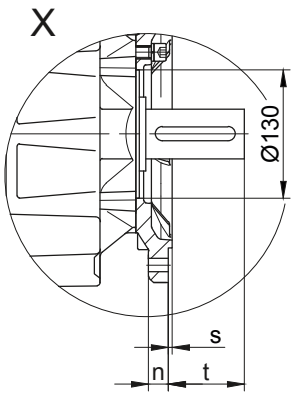

Code -.1/

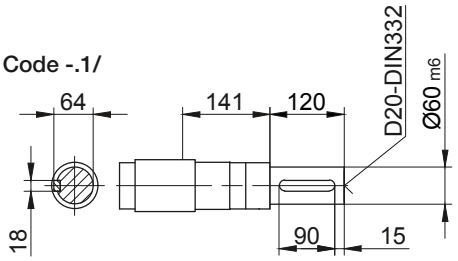

Code -.5/

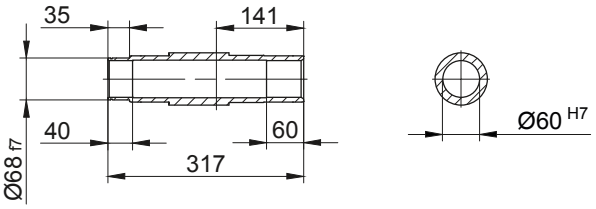

Code -.3/

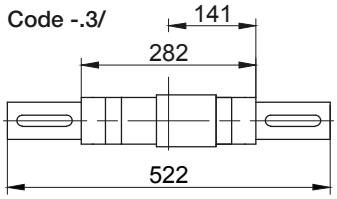

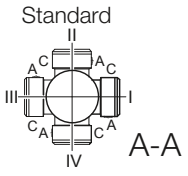

Flange Dimensions										
Type	Design	k	l	m	n	o	p	q	s	t
BK50..	Code -3.V/	300	265	230	20	13.5	299	164	4	97
BK50..	Code -2.V/	250	215	180	16	13.5	296	161	4	100
Dimensions in millimetres (mm)										

Type	a	b	c	d	i	Design with motor extensions				
						i_{TB}	Brake	Encoder	Brake with Encoder	Back Stop
							d_{ML}	d_{ML}	d_{ML}	d_{ML}
BK50Z-../D..05.A.	170.5	155	123	686.5	101.5	117	728.5	789	826.5	-
BK50Z-../D..06.A.	170.5	155	123	686.5	101.5	119	728.5	789	826.5	-
BK50Z-../D..07.A.	190.5	155	123	706.5	101.5	119	748.5	809	846.5	-
BK50-../D..08.A.	199.5	73	156	633.5	116	136.5	699.5	745.5	807	699.5
BK50Z-../D..08.A.	199.5	159	156	719.5	116	136.5	785.5	831.5	893	785.5
BK50-../D..08.B.	229.5	73	156	663.5	116	136.5	729.5	775.5	836.5	729.5
BK50Z-../D..08.B.	229.5	159	156	749.5	116	136.5	815.5	861.5	922.5	815.5
BK50-../D..09.A.	250.5	87.5	176	699	125.5	157	792	806.5	896	792
BK50Z-../D..09.A.	250.5	173.5	176	785	125.5	157	878	892.5	982	878
BK50-../D..09.B.	308.5	87.5	176	757	125.5	157	850	864	954	850
BK50Z-../D..09.B.	308.5	173.5	176	843	125.5	157	936	950	1040	936
BK50-../D..11.A.	319	94	218	774	165	176	872	881.5	974	872
BK50-../D..11.B.	387	94	218	842	165	176	938	949.5	1042	938
BK50-../D..13.A.	393	107	258	861	217	217	972	968	1073	969
BK50-../D..16.B.	454.5	121	310	936.5	243	243	1080	1043.5	1183.5	1080
BK50-../D..18.B.	542	143	348	1046	288	288	1195.5	1151.5	1299	1195.5
Dimensions in millimetres (mm)										

The actual gearbox design can vary from the geometry shown. Generate drive specific 3D and 2D geometries under www.BauerCat.com.

BK50-BK50Z

Torque arm at front

Code -5.V/

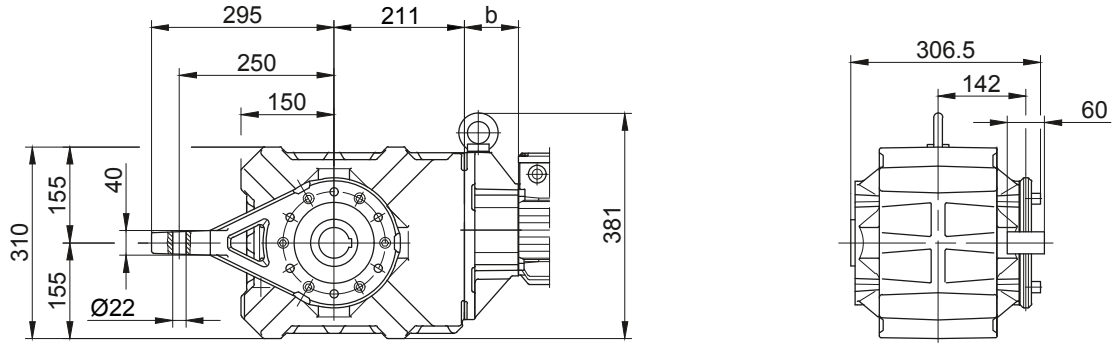

Flange with tapped holes at front

Code -7.V/

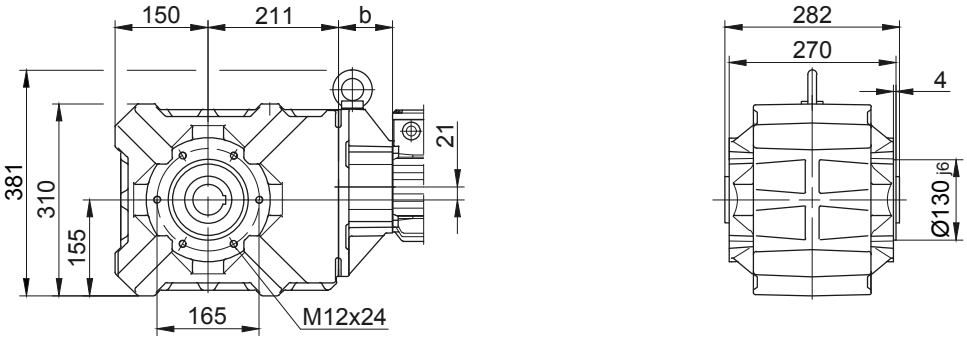

Foot with tapped holes at bottom

Code -6.U/

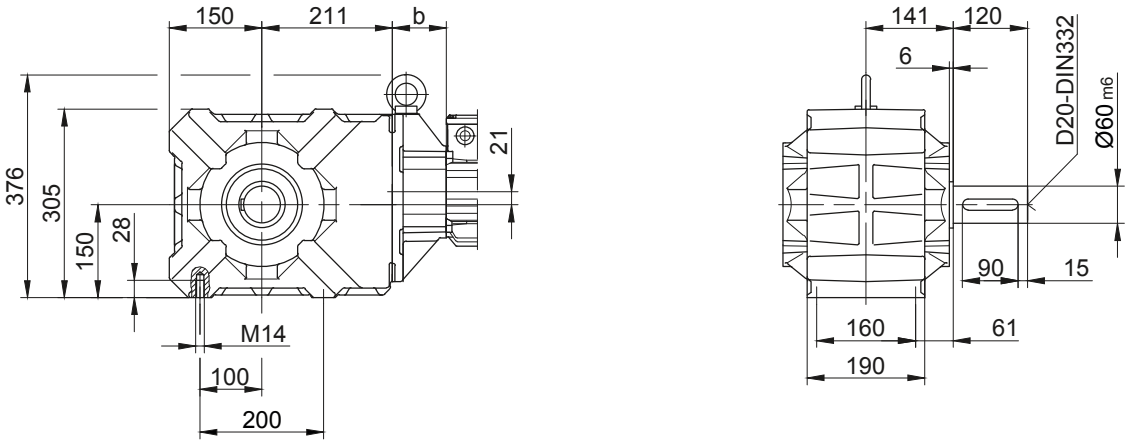

Foot with clearance holes at bottom

Code -1.U/

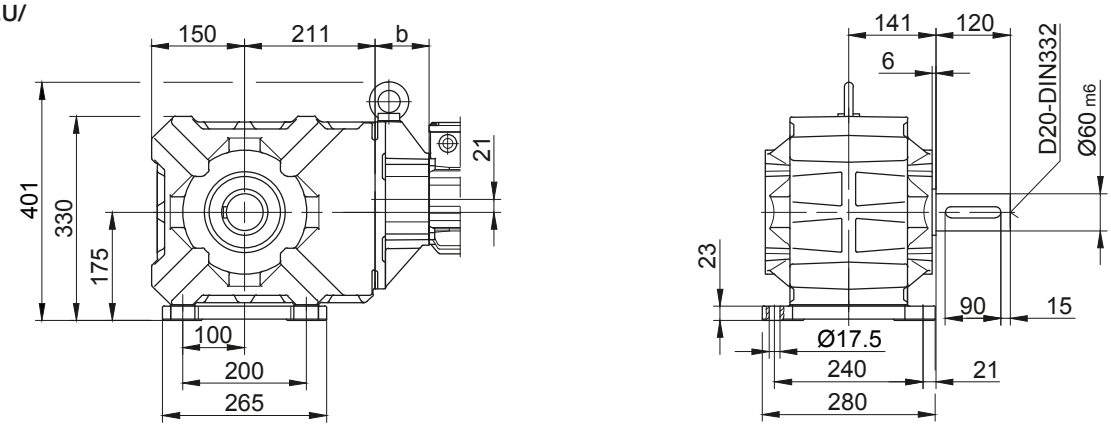

BK-series bevel-geared motors

Dimension - Standard

BK60-BK60Z

Flange with clearance holes at front

Code -3.V/

(Code -2.V/)

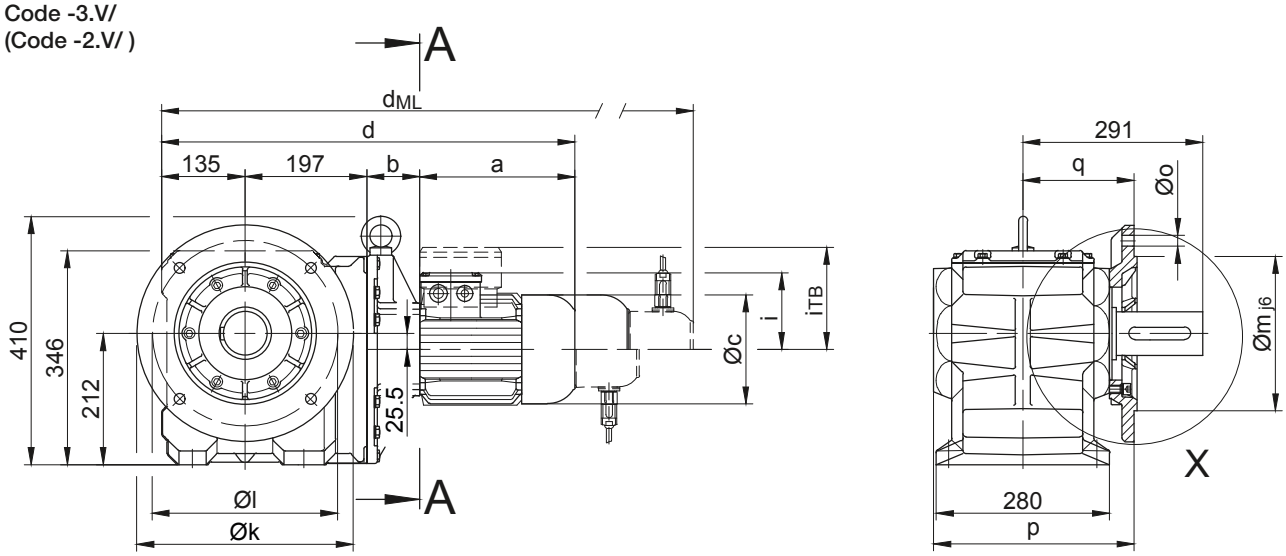

Code -.4/

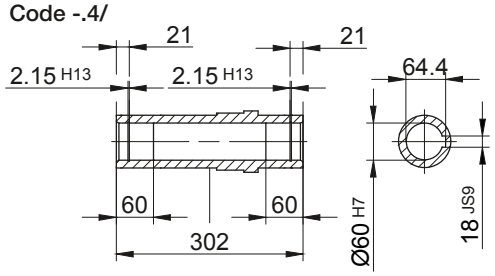

Code -.1/

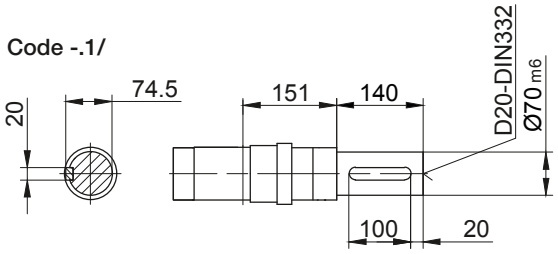

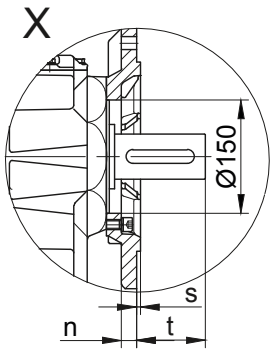

Code -.5/

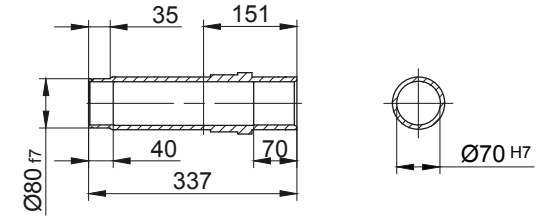

Code -.3/

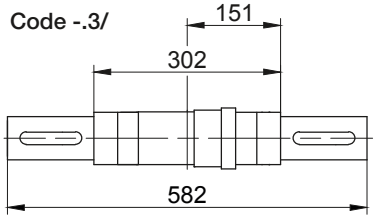

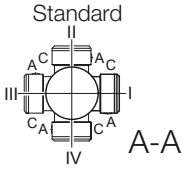

Flange Dimensions										
Type	Design	k	l	m	n	o	p	q	s	t
BK60..	Code -3.V/	350	300	250	20	17.5	324	180	5	112
BK60..	Code -2.V/	300	265	230	20	13.5	332	188	4	103
Dimensions in millimetres (mm)										

Type	a	b	c	d	i	Design with motor extensions				
						i_{TB}	Brake	Encoder	Brake with Encoder	Back Stop
							d_{ML}	d_{ML}	d_{ML}	d_{ML}
BK60Z-../D..08.A.	199.5	181	156	712.5	116	136.5	778.5	824.5	886	778.5
BK60Z-../D..08.B.	229.5	181	156	742.5	116	136.5	808.5	854.5	915.5	808.5
BK60-../D..09.A.	250.5	85.5	176	668	125.5	157	761	775.5	865	761
BK60Z-../D..09.A.	250.5	195.5	176	778	125.5	157	871	885.5	975	871
BK60-../D..09.B.	308.5	85.5	176	726	125.5	157	819	833	923	819
BK60Z-../D..09.B.	308.5	195.5	176	836	125.5	157	929	943	1033	929
BK60-../D..11.A.	319	92	218	743	165	176	841	850.5	943	841
BK60Z-../D..11.A.	319	202	218	853	165	176	951	960.5	1053	951
BK60-../D..11.B.	387	92	218	811	165	176	907	918.5	1011	907
BK60Z-../D..11.B.	387	202	218	921	165	176	1017	1028.5	1121	1017
BK60-../D..13.A.	393	105	258	830	217	217	941	937	1042	938
BK60-../D..16.B.	454.5	119	310	905.5	243	243	1049	1012.5	1152.5	1049
BK60-../D..18.B.	542	141	348	1015	288	288	1164.5	1120.5	1268	1164.5
Dimensions in millimetres (mm)										

The actual gearbox design can vary from the geometry shown. Generate drive specific 3D and 2D geometries under www.BauerCat.com.

BK60-BK60Z

Torque arm at front
Code -5.V/

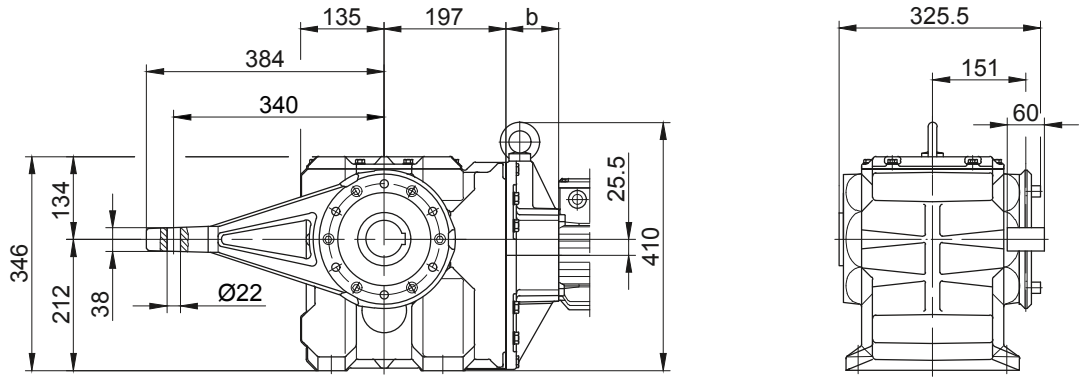

Flange with tapped holes at front
Code -7.V/

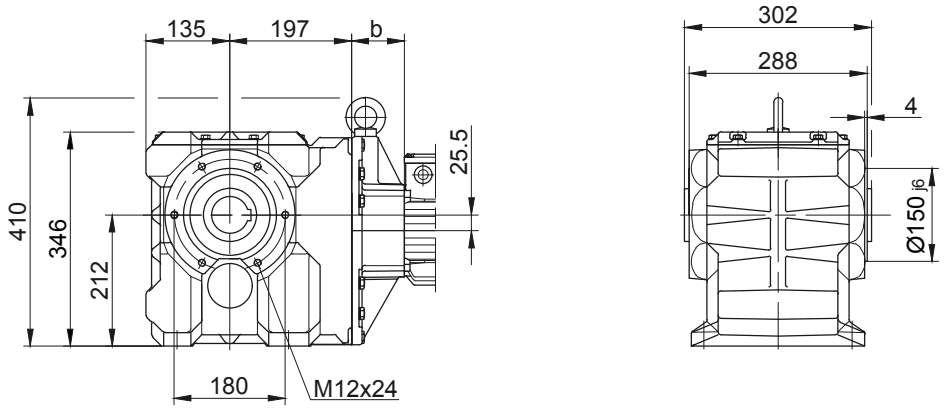

Foot with clearance holes at bottom
Code -1.U/

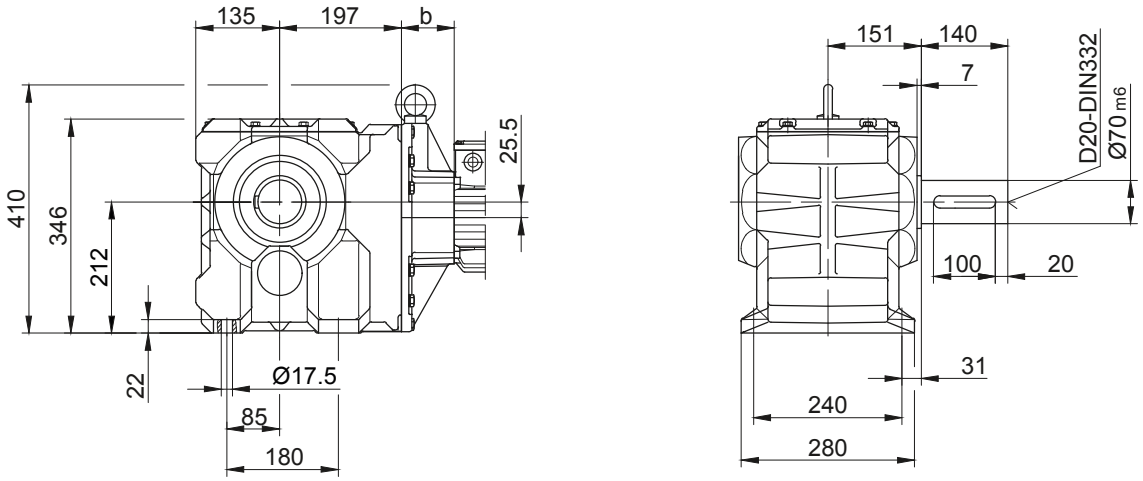

BK-series bevel-geared motors

Dimension - Standard

BK70-BK70Z

Flange with clearance holes at front

Code -3.V/
(Code -2.V/)
(Code -4.V/)

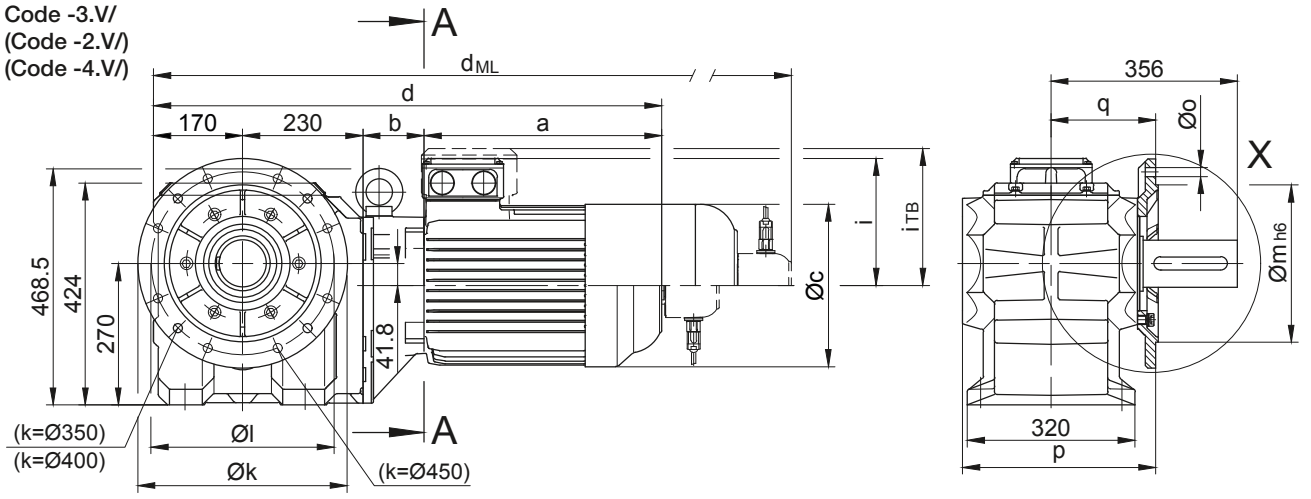

Code -.4/

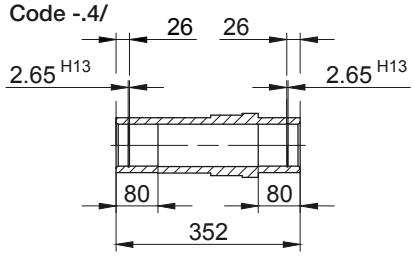

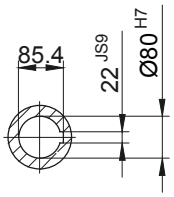

Code -.1/

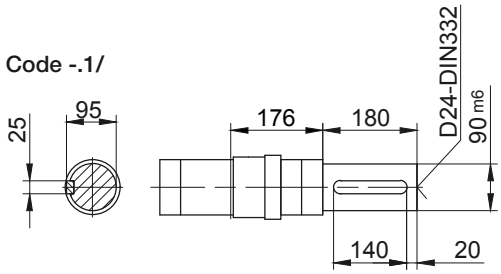

Code -.5/

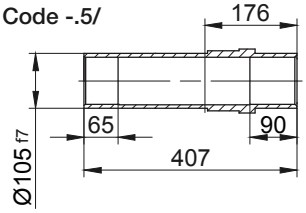

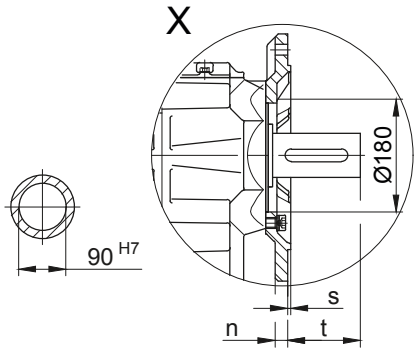

Code -.3/

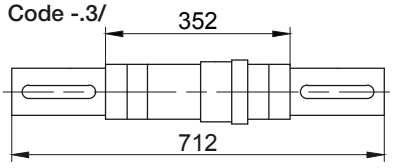

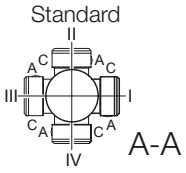

Flange Dimensions										
Type	Design	k	l	m	n	o	p	q	s	t
BK70..	Code -3.V/	400	350	300	20	4 x 17.5	369	200	5	157
BK70..	Code -2.V/	350	300	250	20	4 x 17.5	369	200	5	157
BK70..	Code -4.V/	450	400	350	22	4 x 17.5	379	210	5	147
Dimensions in millimetres (mm)										

Type	a	b	c	d	i	Design with motor extensions				
						i_{TB}	Brake	Encoder	Brake with Encoder	Back Stop
							d_{ML}	d_{ML}	d_{ML}	d_{ML}
BK70Z-../D..08.A.	199.5	202	156	801.5	116	136.5	867.5	913.5	975	867.5
BK70Z-../D..08.B.	229.5	202	156	831.5	116	136.5	897.5	943.5	1004.5	897.5
BK70-../D..09.A.	250.5	83.5	176	734	125.5	157	827	841.5	931	827
BK70Z-../D..09.A.	250.5	216.5	176	867	125.5	157	960	974.5	1064	960
BK70-../D..09.B.	308.5	83.5	176	792	125.5	157	885	899	989	885
BK70Z-../D..09.B.	308.5	216.5	176	925	125.5	157	1018	1032	1122	1018
BK70-../D..11.A.	319	90	218	809	165	176	907	916.5	1009	907
BK70Z-../D..11.A.	319	223	218	942	165	176	1040	1049.5	1142	1040
BK70-../D..11.B.	387	90	218	877	165	176	973	984.5	1077	973
BK70Z-../D..11.B.	387	223	218	1010	165	176	1106	1117.5	1210	1106
BK70-../D..13.A.	393	103	258	896	217	217	1007	1003	1108	1004
BK70Z-../D..13.A.	393	236	258	1029	217	217	1140	1136	1241	1137
BK70-../D..16.B.	454.5	117	310	971.5	243	243	1115	1078.5	1218.5	1115
BK70Z-../D..16.B.	454.5	250	310	1104.5	243	243	1248	1211.5	1351.5	1248
BK70-../D..18.B.	542	139	348	1081	288	288	1230.5	1186.5	1334	1230.5
BK70Z-../D..18.B.	542	272	348	1214	288	288	1363.5	1319.5	1467	1363.5
BK70-../D..20.A.	703.5	156	363	1259.5	302	302	1387	1365	1492.5	1259.5
BK70-../D..22.A.	703.5	156	363	1259.5	302	302	1387	1365	1492.5	1259.5
Dimensions in millimetres (mm)										

The actual gearbox design can vary from the geometry shown. Generate drive specific 3D and 2D geometries under www.BauerCat.com.

BK70-BK70Z

Torque arm at front

Code -5.V/

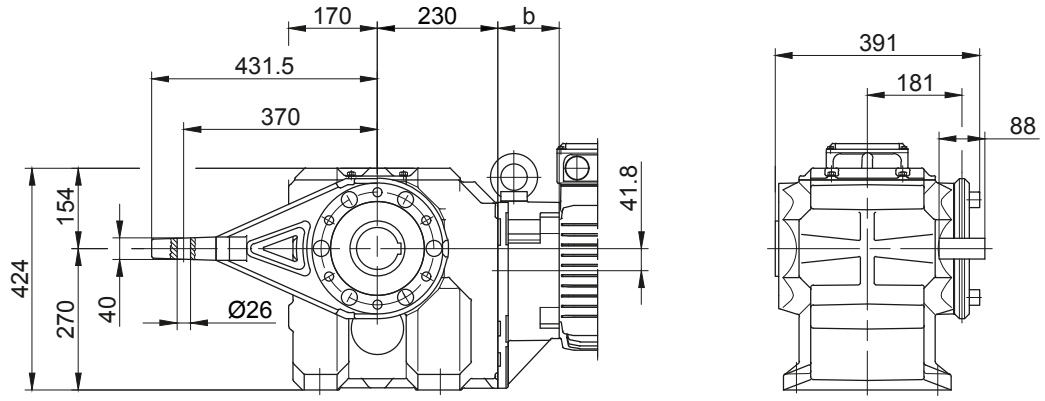

Flange with tapped holes at front

Code -7.V/

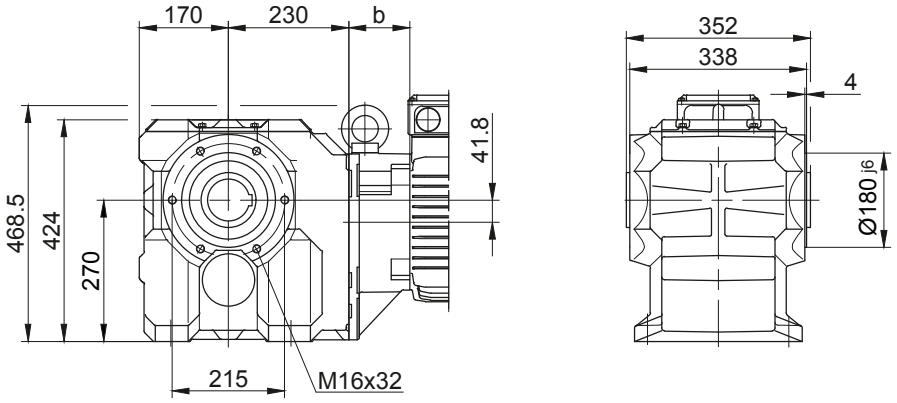

Foot with clearance holes at bottom

Code -1.U/

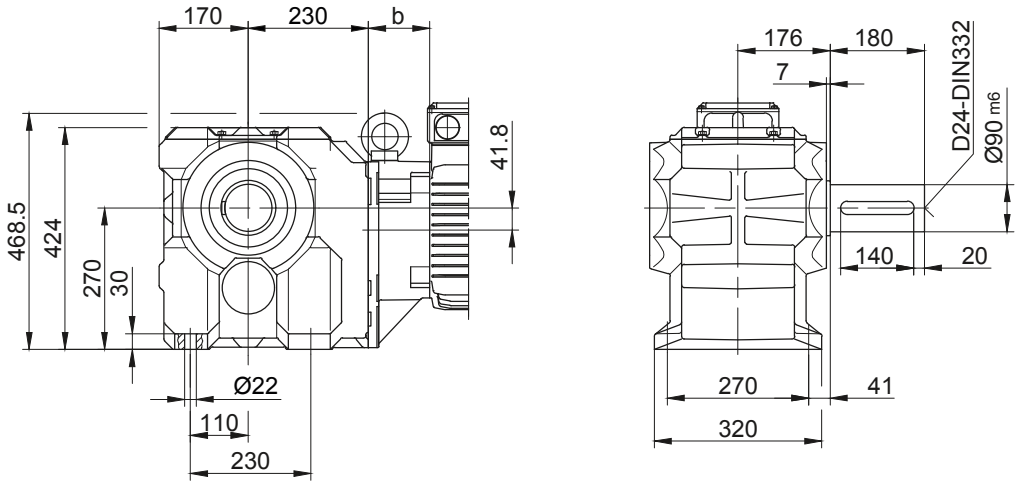

Code -.4/K70

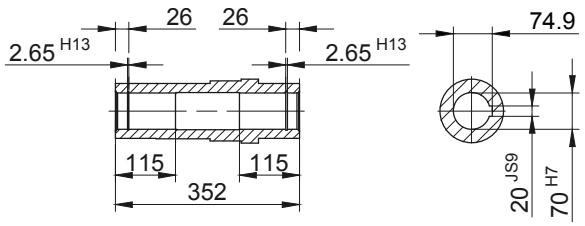

The actual gearbox design can vary from the geometry shown. Generate drive specific 3D and 2D geometries under www.BauerCat.com.

BK-series bevel-geared motors

Dimension - Standard

BK80-BK80Z

Flange with clearance holes at front

Code -3.V/
(Code -4.V/)

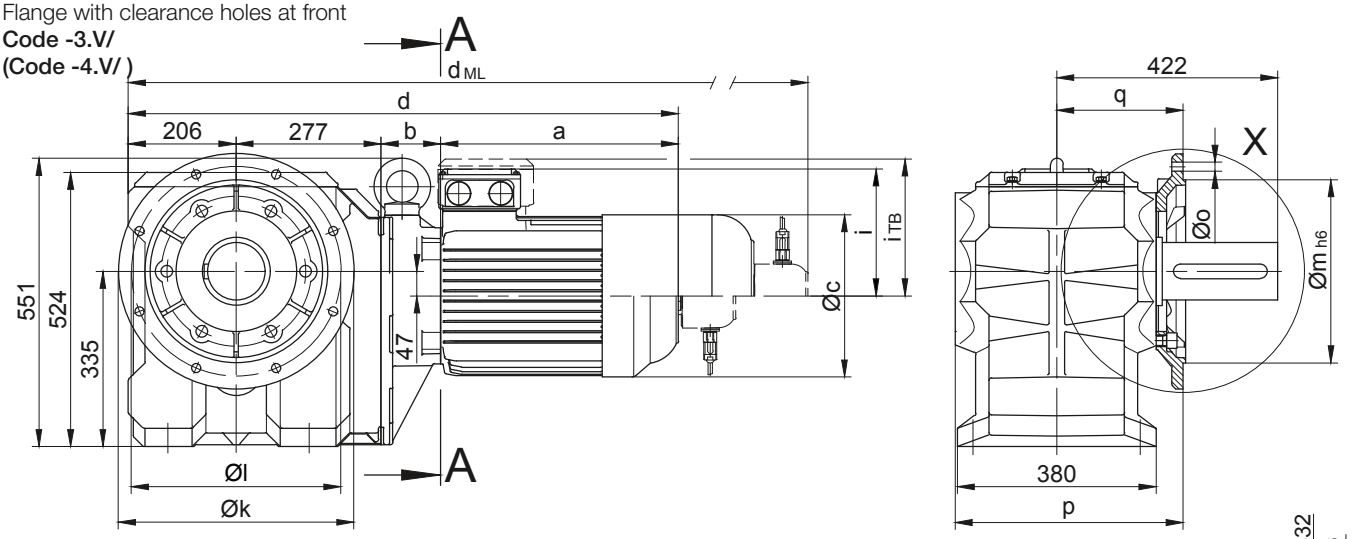

Code -.4/

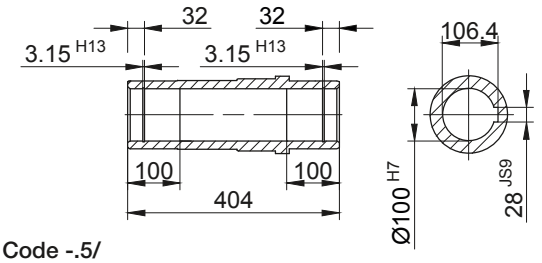

Code -.1/

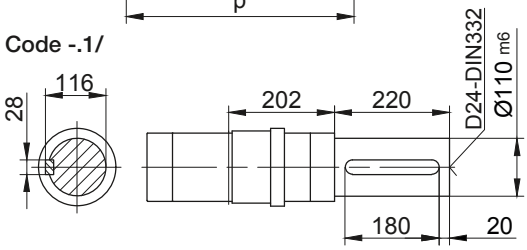

Code -.5/

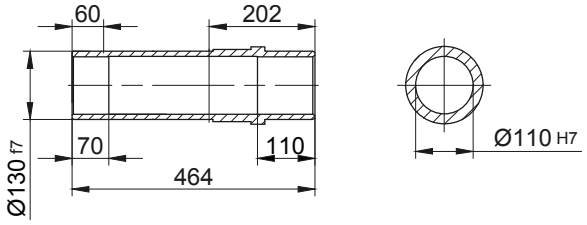

Code -.3/

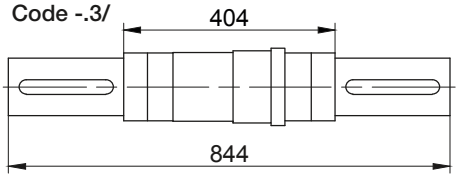

Code -.4/ K90

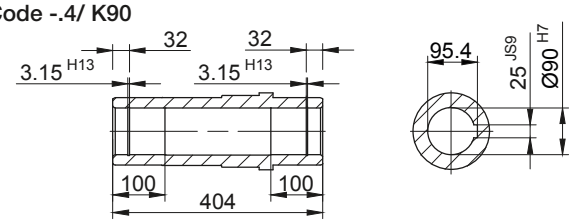

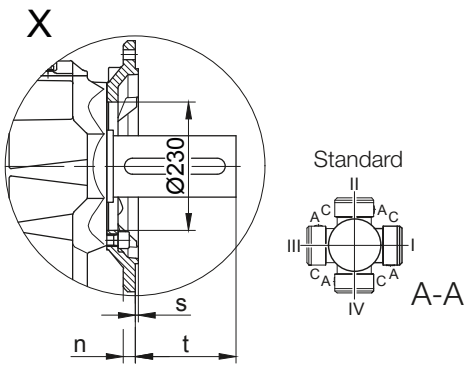

Flange Dimensions										
Type	Design	k	l	m	n	o	p	q	s	t
BK80..	Code -3.V/	450	400	350	22	17.5	439	245	5	178
BK80..	Code -4.V/	550	500	450	22	17.5	444	250	5	173
Dimensions in millimetres (mm)										

Type	a	b	c	d	i	Design with motor extensions				
						i_{TB}	Brake	Encoder	Brake with Encoder	Back Stop
							d_{ML}	d_{ML}	d_{ML}	d_{ML}
BK80Z-../D..09.A.	250.5	252.5	176	986	125.5	157	1079	1093.5	1183	1079
BK80Z-../D..09.B.	308.5	252.5	176	1044	125.5	157	1137	1151	1241	1137
BK80-../D..11.A.	319	87	218	889	165	176	987	996.5	1089	987
BK80Z-../D..11.A.	319	259	218	1061	165	176	987	1168.5	1261	1159
BK80-../D..11.B.	387	87	218	957	165	176	1053	1064.5	1157	1053
BK80Z-../D..11.B.	387	259	218	1129	165	176	1225	1236.5	1329	1225
BK80-../D..13.A.	393	100	258	976	217	217	1087	1083	1188	1084
BK80Z-../D..13.A.	393	272	258	1148	217	217	1259	1255	1360	1256
BK80-../D..16.B.	454.5	114	310	1051.5	243	243	1195	1158.5	1298.5	1195
BK80Z-../D..16.B.	454.5	286	310	1223.5	243	243	1367	1330.5	1470.5	1367
BK80-../D..18.B.	542	136	348	1161	288	288	1217	1266.5	1414	1310.5
BK80Z-../D..18.B.	542	308	348	1333	288	288	1389	1438.5	1586	1482.5
BK80-../D..20.A.	703.5	153	363	1339.5	302	302	1467	1445	1572.5	1339.5
BK80-../D..22.A.	703.5	153	363	1339.5	302	302	1467	1445	1572.5	1339.5
Dimensions in millimetres (mm)										

The actual gearbox design can vary from the geometry shown. Generate drive specific 3D and 2D geometries under www.BauerCat.com.

BK80-BK80Z

Torque arm at front

Code -5.V/

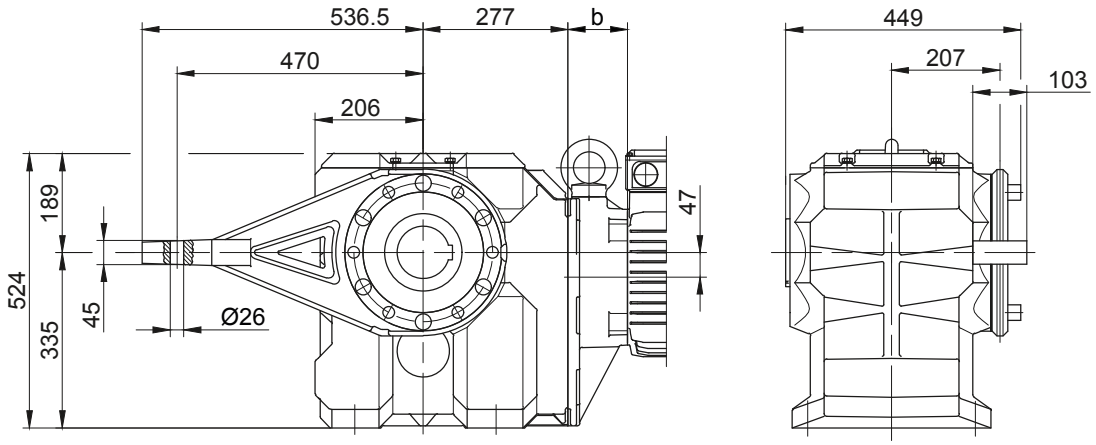

Flange with tapped holes at front

Code -7.V/

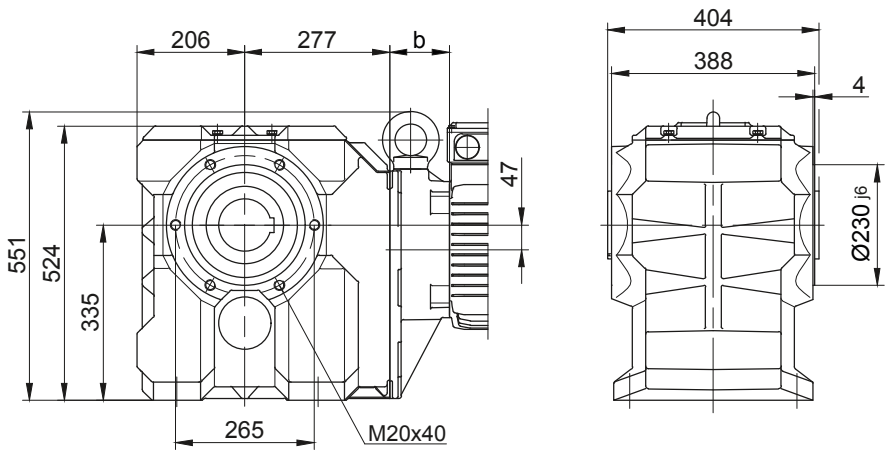

Foot with clearance holes at bottom

Code -1.U/

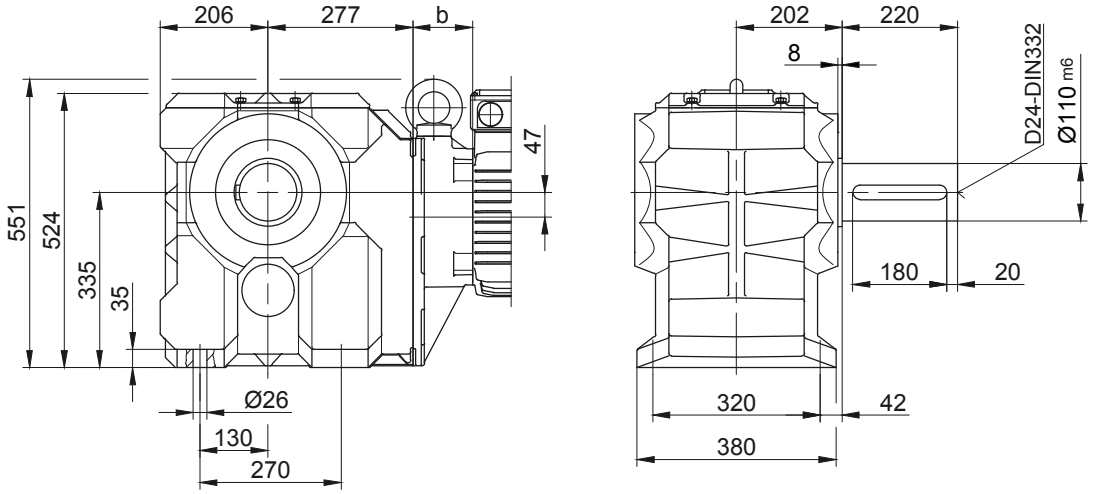

BK-series bevel-geared motors

Dimension - Standard

BK90-BK90Z

Flange with clearance holes at front

Code -3.V/

(Code -4.V/)

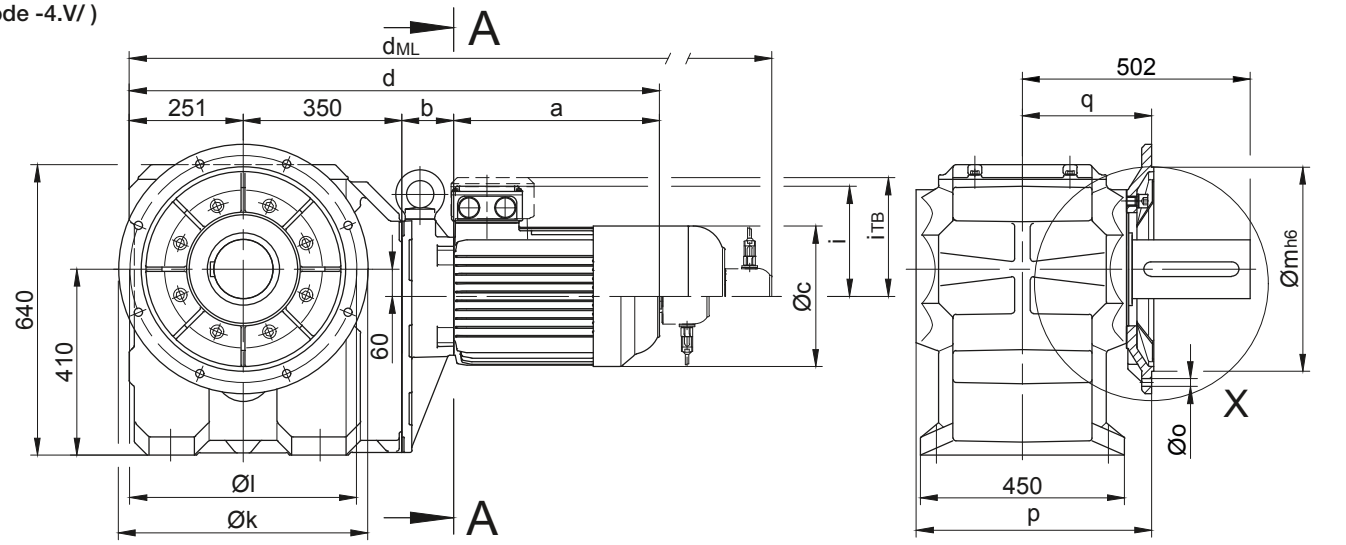

Code -.4/

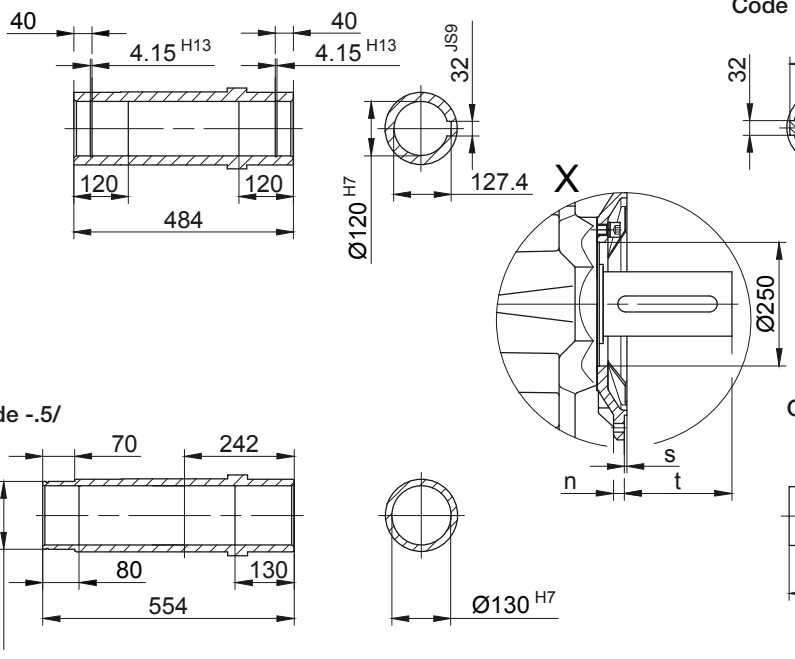

Code -.1/

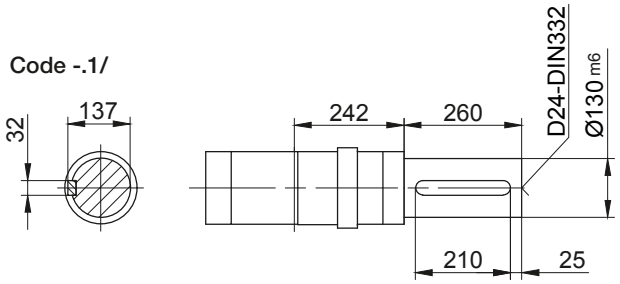

Code -.5/

Code -.3/

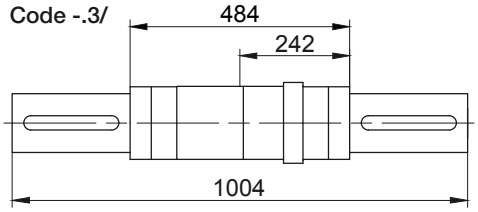

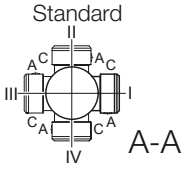

Flange Dimensions										
Type	Design	k	l	m	n	o	p	q	s	t
BK90..	Code -3.V/	550	500	450	22	17.5	519	285	5	218
BK90..	Code -4.V/	660	600	550	25	22	513	279	6	225
Dimensions in millimetres (mm)										

Type	a	b	c	d	i	Design with motor extensions				
						i_{TB}	Brake	Encoder	Brake with Encoder	Back Stop
							d_{ML}	d_{ML}	d_{ML}	d_{ML}
BK90Z-../D..09.A.	250.5	267	176	1118.5	125.5	157	1211.5	1226	1315.5	1211.5
BK90Z-../D..09.B.	308.5	267	176	1176.5	125.5	157	1269.5	1283.5	1373.5	1269.5
BK90Z-../D..11.A.	319	273.5	218	1193.5	165	176	1291.5	1301	1393.5	1291.5
BK90Z-../D..11.B.	387	273.5	218	1261.5	165	176	1357.5	1369	1461.5	1357.5
BK90-../D..13.A.	393	100	258	1094	217	217	1205	1201	1306	1202
BK90Z-../D..13.A.	393	286.5	258	1280.5	217	217	1391.5	1387.5	1492.5	1388.5
BK90-../D..16.B.	454.5	114	310	1169.5	243	243	1313	1276.5	1416.5	1313
BK90Z-../D..16.B.	454.5	300.5	310	1356	243	243	1499.5	1463	1603	1499.5
BK90-../D..18.B.	542	136	348	1279	288	288	1428.5	1384.5	1532	1428.5
BK90Z-../D..18.B.	542	322.5	348	1465.5	288	288	1615	1571	1718.5	1615
BK90-../D..20.A.	703.5	153	363	1457.5	302	302	1585	1563	1690.5	1457.5
BK90-../D..22.A.	703.5	153	363	1457.5	302	302	1585	1563	1690.5	1457.5
Dimensions in millimetres (mm)										

The actual gearbox design can vary from the geometry shown. Generate drive specific 3D and 2D geometries under www.BauerCat.com.

BK90-BK90Z

Torque arm at front

Code -5.V/

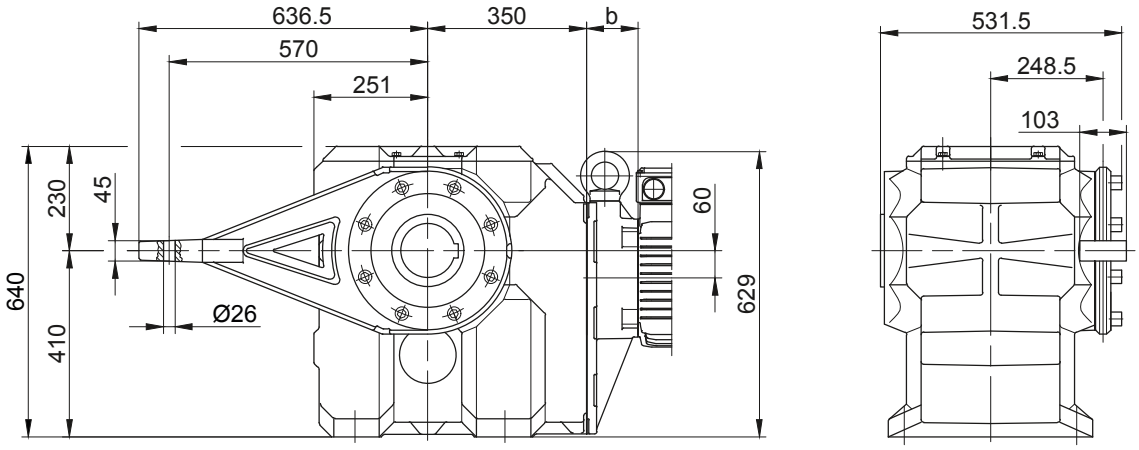

Flange with tapped holes at front

Code -7.V/

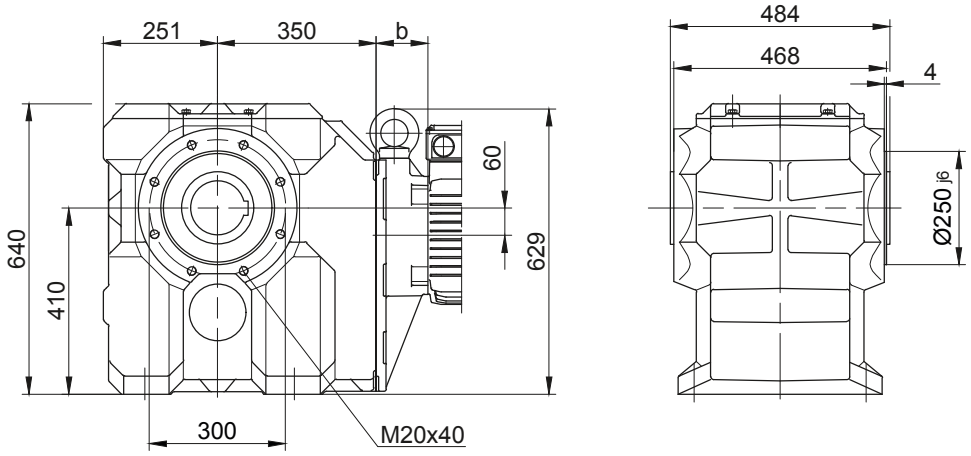

Foot with tapped holes at bottom

Code -1.U/

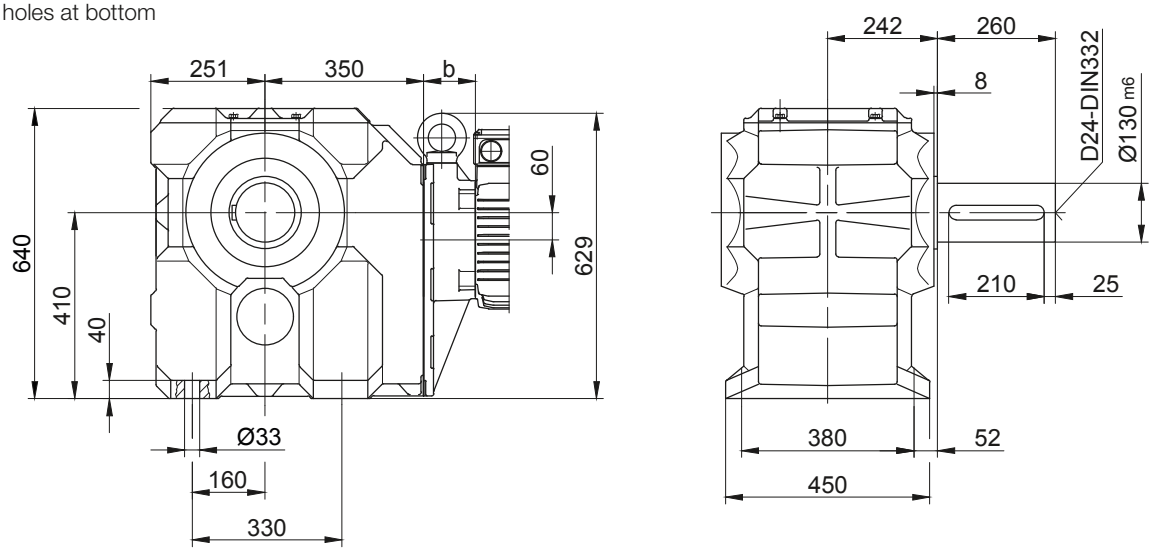

12

BK-series bevel-geared motors

Dimension - Tandem Gearbox

BK10G06

Flange with clearance holes at front
Code -3.V/
(Code -2.V/)

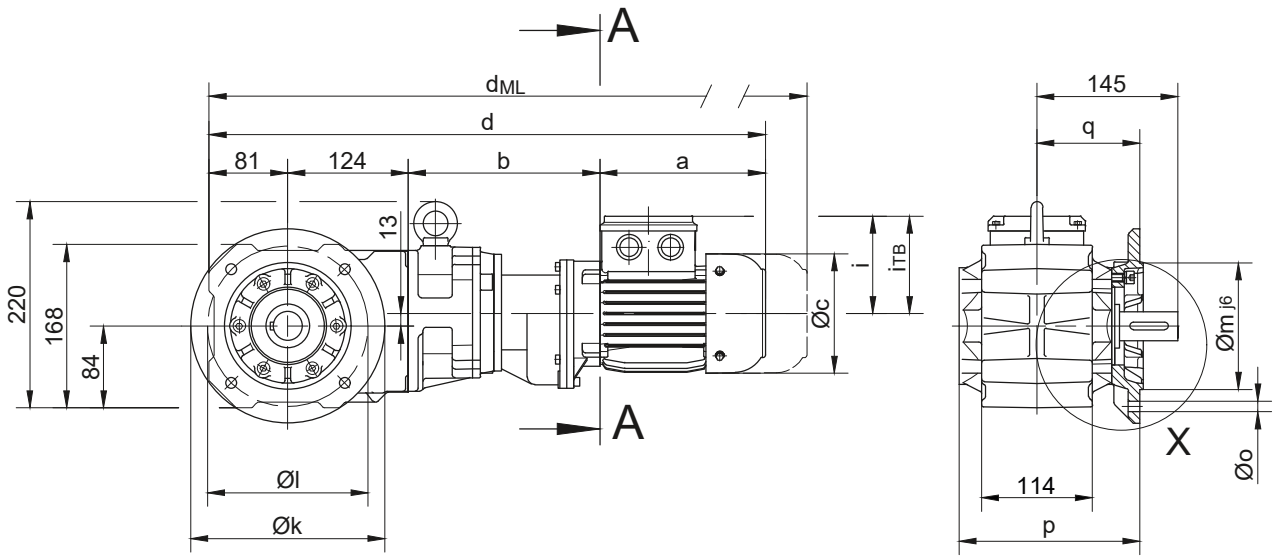

Code -.4/

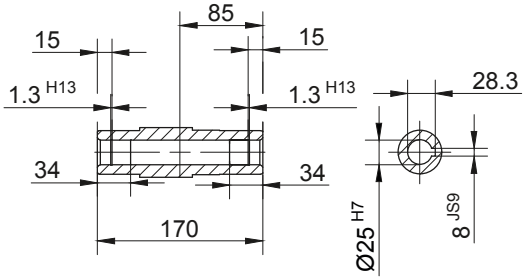

Code -.1/

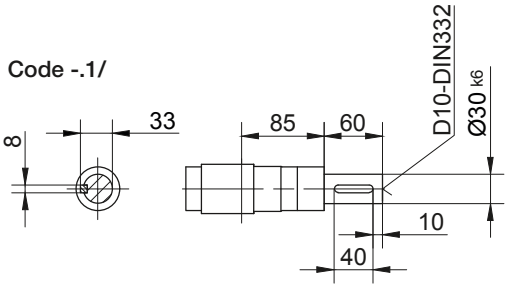

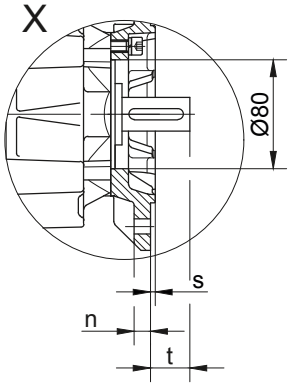

Code -.5/

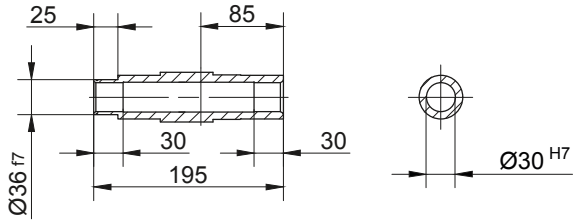

Code -.3/

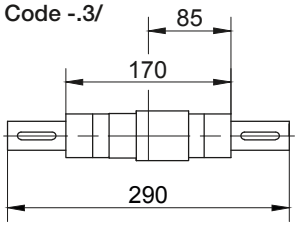

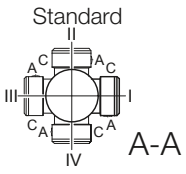

Flange Dimensions										
Type	Design	k	l	m	n	o	p	q	s	t
BK10..	Code -3.V/	200	165	130	12	11	186.5	106	3.5	39
BK10..	Code -2.V/	160	130	110	10	9	179.5	99	3.5	46
Dimensions in millimetres (mm)										

Type	a	b	c	d	i	Design with motor extensions				
						i_{TB}	Brake	Encoder	Brake with Encoder	Back Stop
							d_{ML}	d_{ML}	d_{ML}	d_{ML}
BK10G06-../D04.A.	142.5	193	110.5	540.5	90	112	584	628	671.5	-
BK10G06-../D..05.A.	170.5	195	123	570.5	101.5	117	612.5	673	710.5	-
BK10G06-../D..06.A.	170.5	195	123	570.5	101.5	119	612.5	673	710.5	-
BK10G06-../D..07.A.	190.5	195	123	590.5	101.5	119	632.5	693	730.5	-
BK10G06-../D..08.A.	199.5	239	156	643.5	116	136.5	709.5	755.5	817	709.5
BK10G06-../D..08.B.	229.5	239	156	673.5	116	136.5	739.5	785.5	846.5	739.5
Dimensions in millimetres (mm)										

The actual gearbox design can vary from the geometry shown. Generate drive specific 3D and 2D geometries under www.BauerCat.com.

BK10G06

Torque arm at front

Code -5.V/

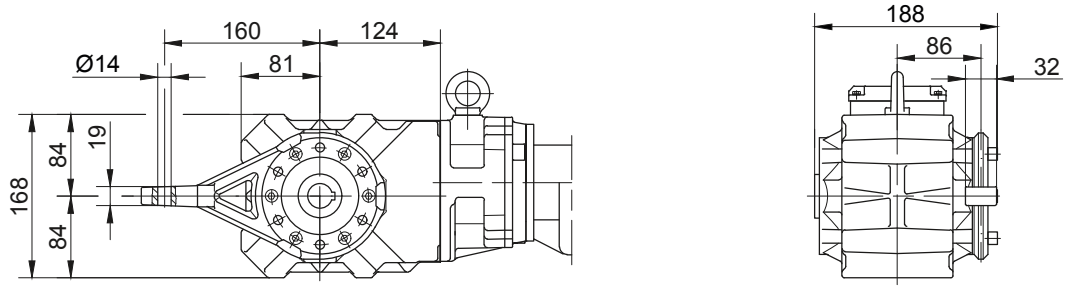

Flange with tapped holes at front

Code -7.V/

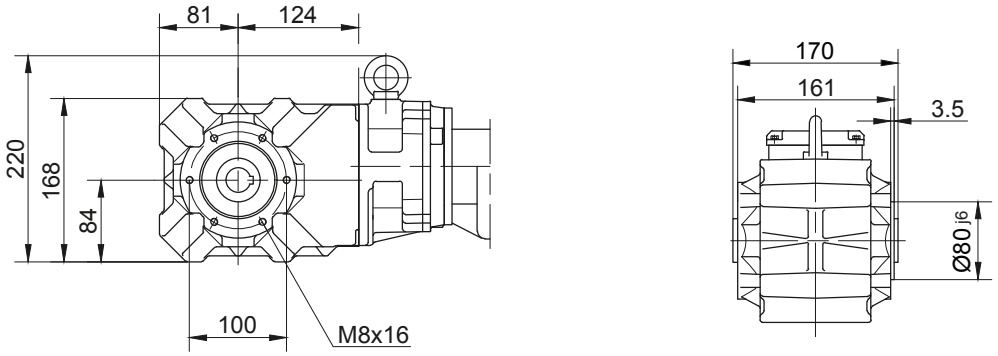

Foot with tapped holes at bottom

Code -6.U/

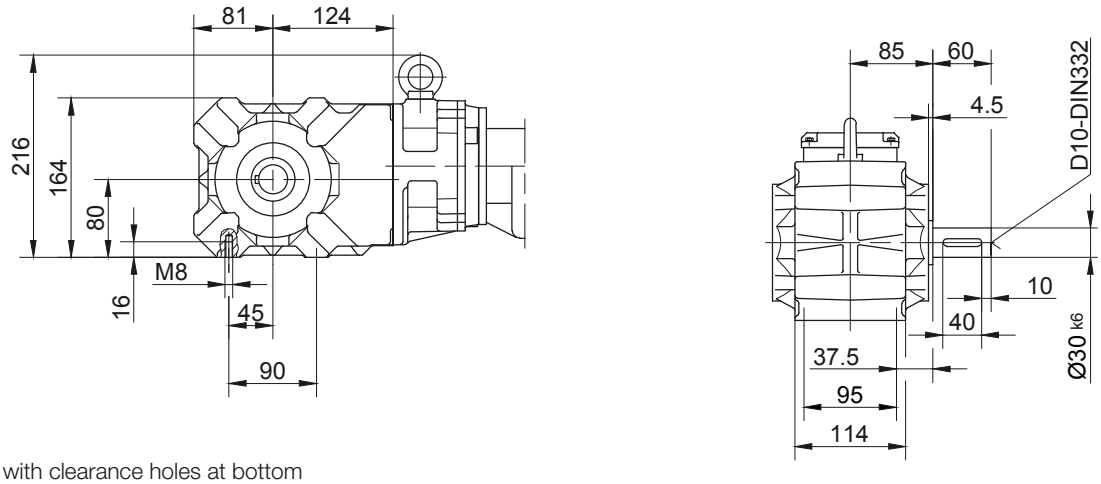

Foot with clearance holes at bottom

Code -1.U/

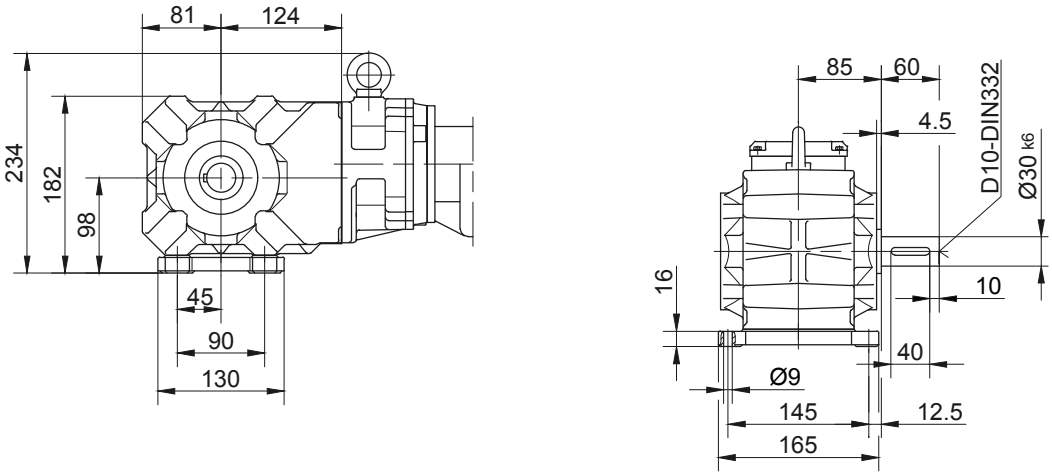

BK-series bevel-geared motors

Dimension - Tandem Gearbox

BK20G06

Flange with clearance holes at front
Code -3.V/
(Code -2.V/)

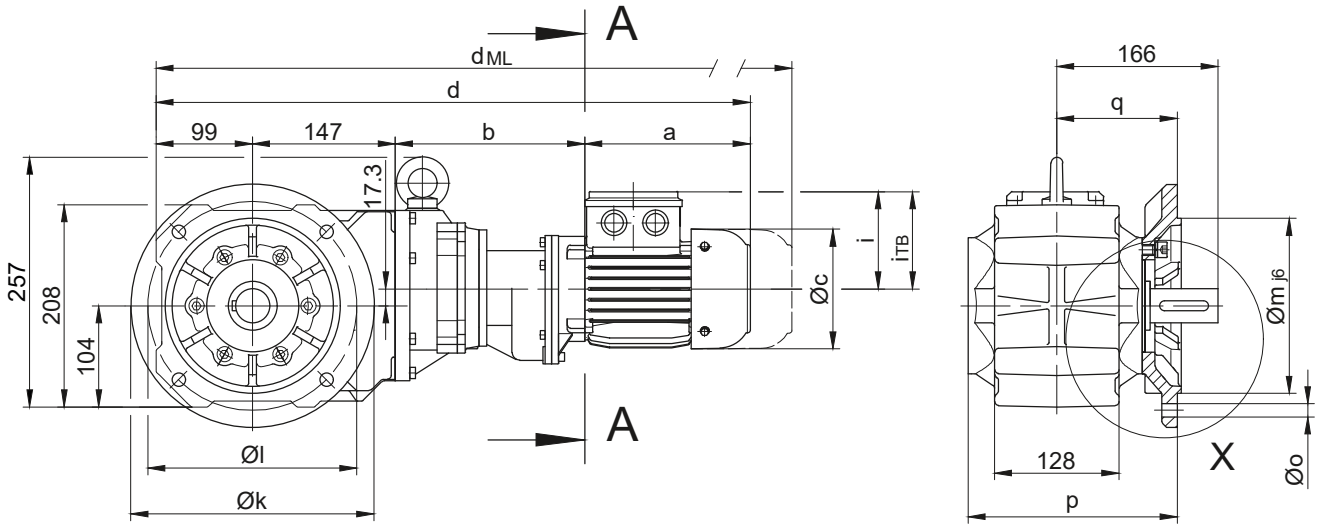

Code -.4/

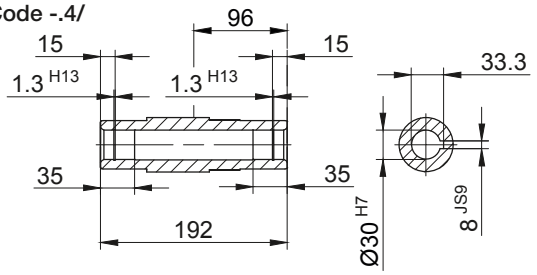

Code -.1/

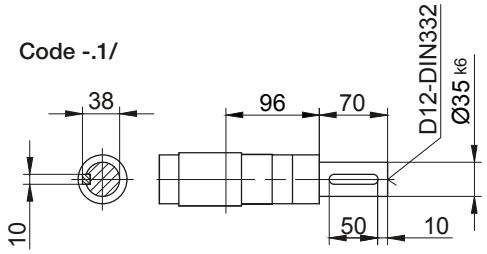

Code -.5/

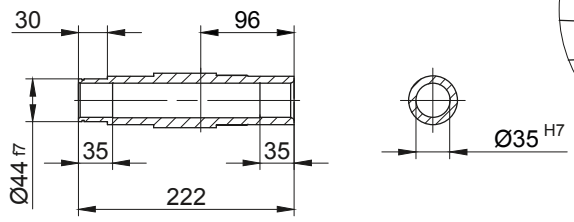

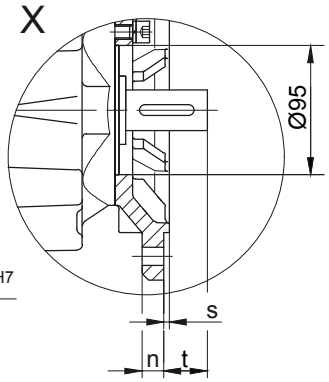

Code -.3/

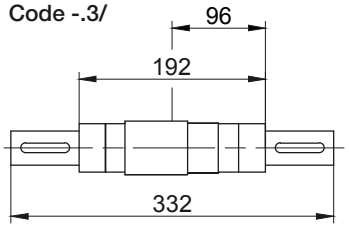

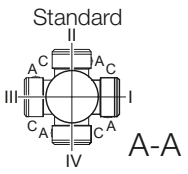

Flange Dimensions										
Type	Design	k	l	m	n	o	p	q	s	t
BK20..	Code -3.V/	250	215	180	16	13.5	215.5	124	4	42.5
BK20..	Code -2.V/	200	165	130	12	11	206.5	115	3.5	51
Dimensions in millimetres (mm)										

Type	a	b	c	d	i	Design with motor extensions				
						i_{TB}	Brake	Encoder	Brake with Encoder	Back Stop
							d_{ML}	d_{ML}	d_{ML}	d_{ML}
BK20G06-../D04.A.	142.5	193	110.5	581.5	90	112	625	669	712.5	-
BK20G06-../D..05.A.	170.5	195	123	611.5	101.5	117	653.5	714	751.5	-
BK20G06-../D..06.A.	170.5	195	123	611.5	101.5	119	653.5	714	751.5	-
BK20G06-../D..07.A.	190.5	195	123	631.5	101.5	119	673.5	734	771.5	-
BK20G06-../D..08.A.	199.5	239	156	684.5	116	136.5	750.5	796.5	858	750.5
BK20G06-../D..08.B.	229.5	239	156	714.5	116	136.5	780.5	826.5	887.5	780.5
Dimensions in millimetres (mm)										

The actual gearbox design can vary from the geometry shown. Generate drive specific 3D and 2D geometries under www.BauerCat.com.

BK20G06

Torque arm at front

Code -5.V/

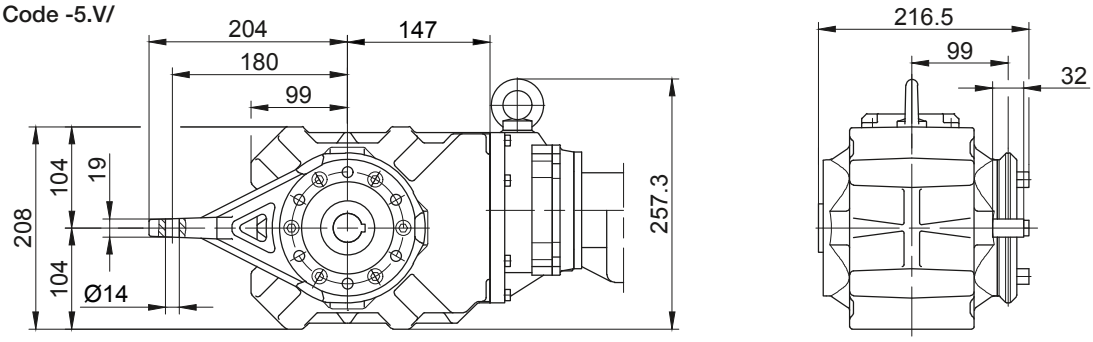

Flange with tapped holes at front

Code -7.V/

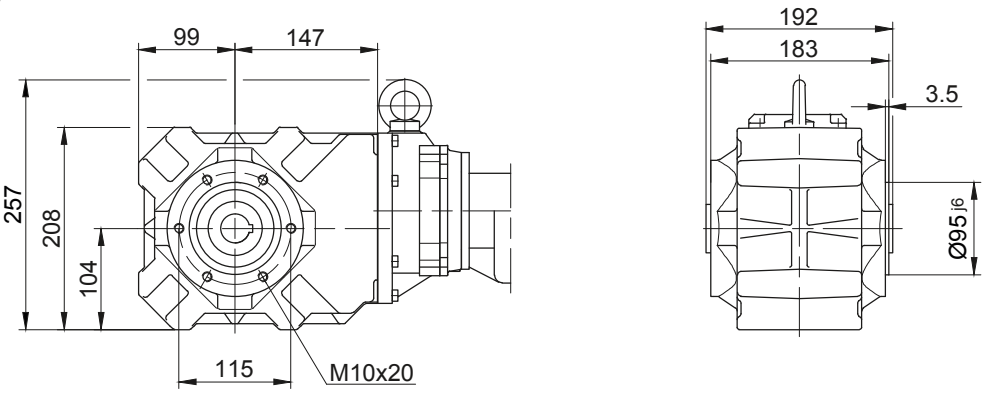

Foot with tapped holes at bottom

Code -6.U/

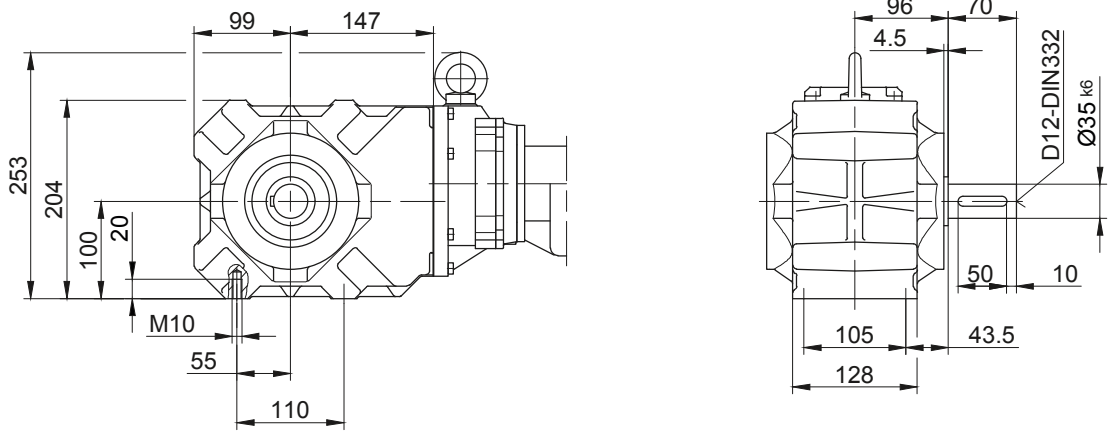

Foot with clearance holes at bottom

Code -1.U/

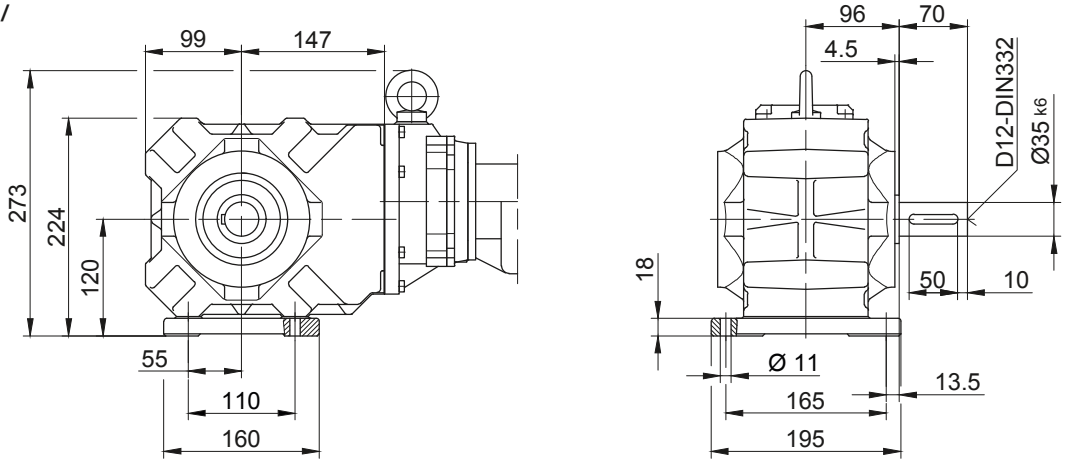

BK-series bevel-geared motors

Dimension - Tandem Gearbox

BK30G06

Flange with clearance holes at front
Code -3.V/
(Code -2.V/)

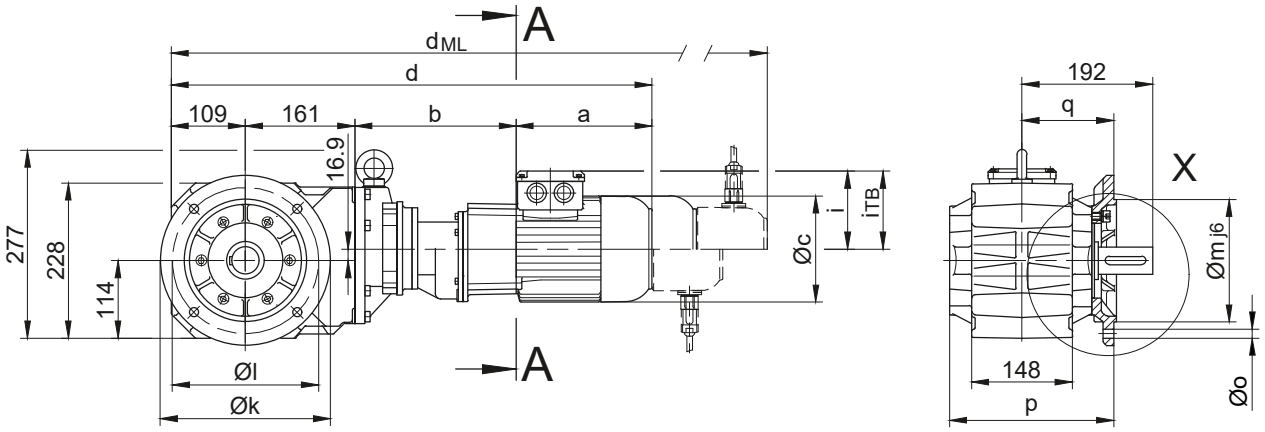

Code -.4/

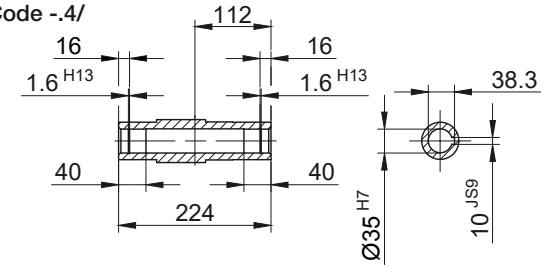

Code -.1/

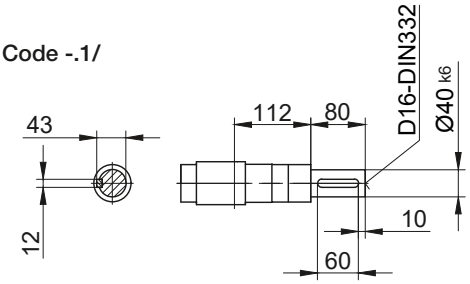

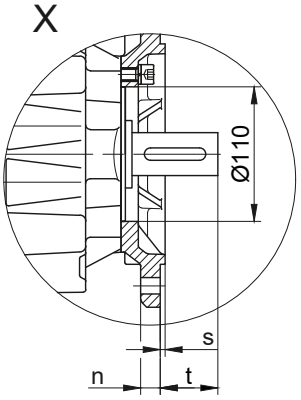

Code -.5/

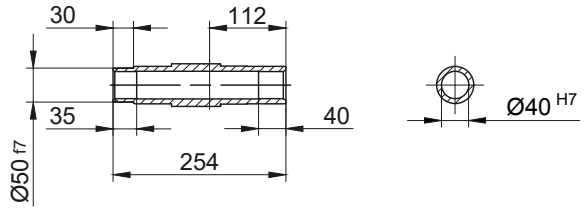

Code -.3/

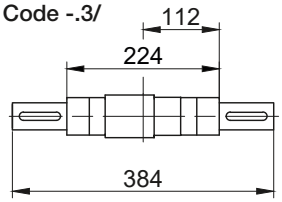

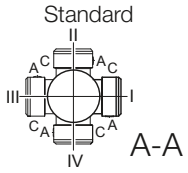

Flange Dimensions										
Type	Design	k	l	m	n	o	p	q	s	t
BK30..	Code -3.V/	250	215	180	16	13.5	242	135	4	57
BK30..	Code -2.V/	200	165	130	12	11	239	132	3.5	59.5
Dimensions in millimetres (mm)										

Type	a	b	c	d	i	Design with motor extensions				
						i_{TB}	Brake	Encoder	Brake with Encoder	Back Stop
							d_{ML}	d_{ML}	d_{ML}	d_{ML}
BK30G06-../D04.A.	142.5	191	110.5	603.5	90	112	647	691	734.5	-
BK30G06-../D..05.A.	170.5	193	123	633.5	101.5	117	675.5	736	773.5	-
BK30G06-../D..06.A.	170.5	193	123	633.5	101.5	119	675.5	736	773.5	-
BK30G06-../D..07.A.	190.5	193	123	653.5	101.5	119	695.5	756	793.5	-
BK30G06-../D..08.A.	199.5	237	156	706.5	116	136.5	772.5	818.5	880	772.5
BK30G06-../D..08.B.	229.5	237	156	736.5	116	136.5	802.5	848.5	909.5	802.5
Dimensions in millimetres (mm)										

The actual gearbox design can vary from the geometry shown. Generate drive specific 3D and 2D geometries under www.BauerCat.com.

BK30G06

Torque arm at front
Code -5.V/

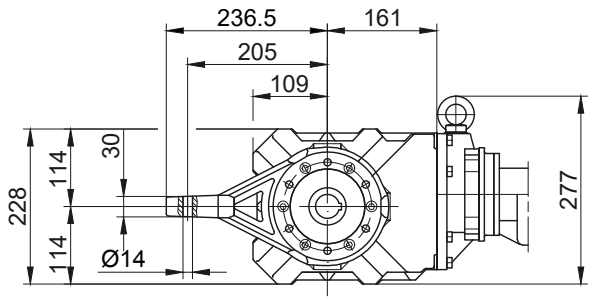

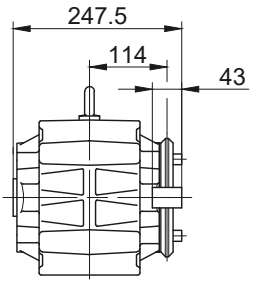

Flange with tapped holes at front
Code -7.V/

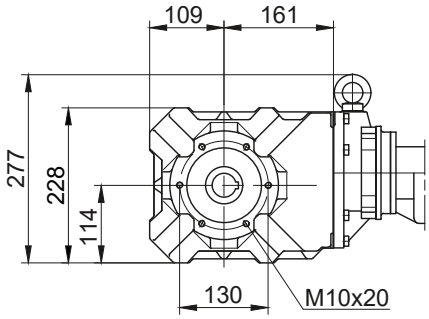

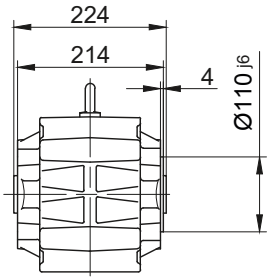

Foot with tapped holes at bottom
Code -6.U/

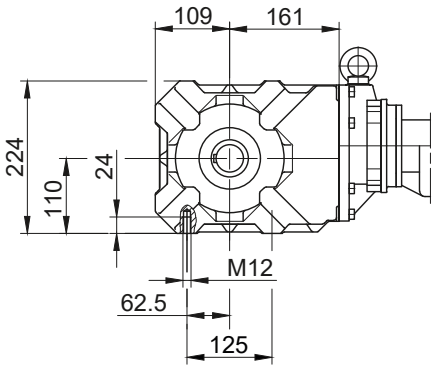

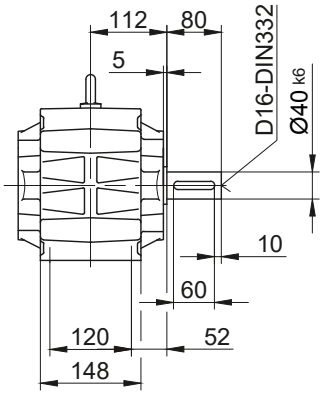

Foot with clearance holes at bottom
Code -1.U/

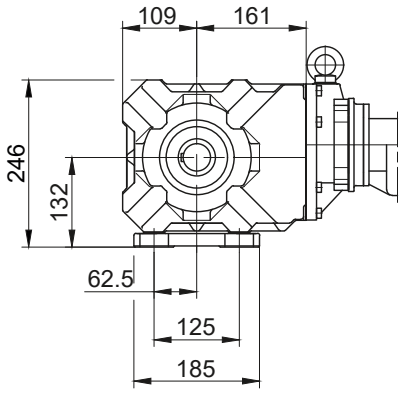

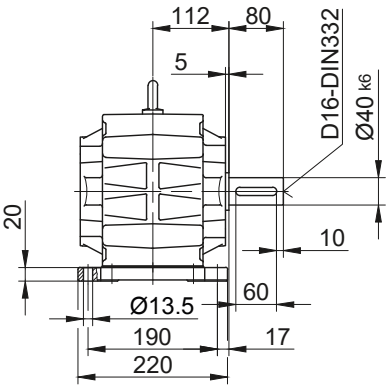

The actual gearbox design can vary from the geometry shown. Generate drive specific 3D and 2D geometries under www.BauerCat.com.

BK-series bevel-geared motors

Dimension - Tandem Gearbox

BK40G10

Flange with clearance holes at front

Code -3.V/

(Code -4.V/)

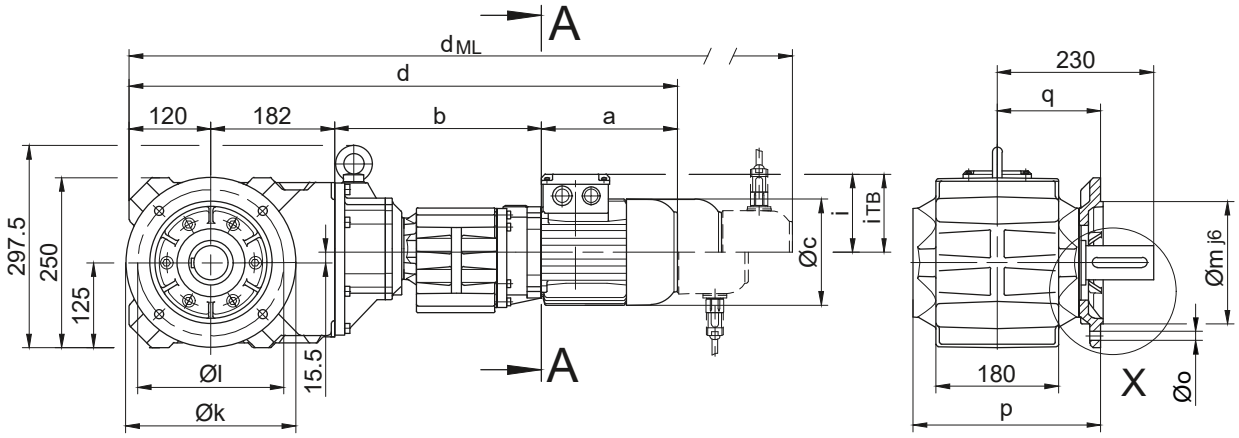

Code -.4/

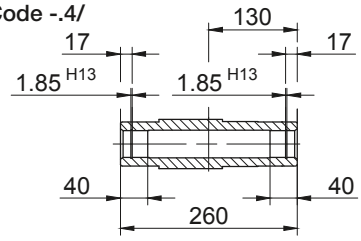

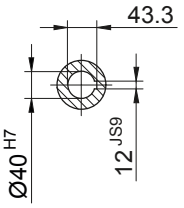

Code -.1/

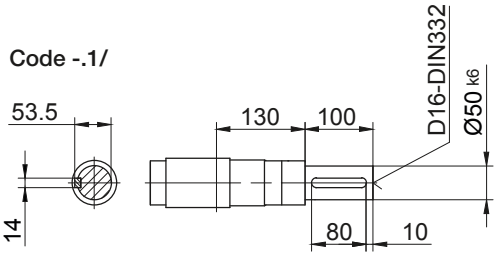

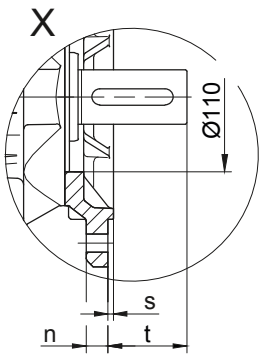

Code -.5/

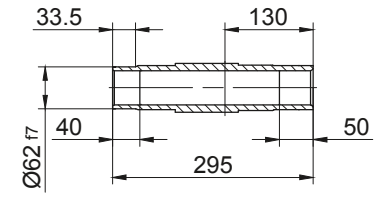

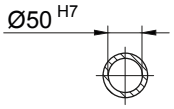

Code -.3/

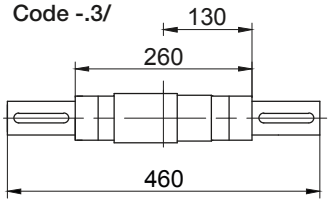

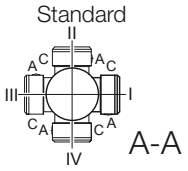

Flange Dimensions										
Type	Design	k	l	m	n	o	p	q	s	t
BK40..	Code -3.V/	250	215	180	16	13.5	276	152	4	78
BK40..	Code -4.V/	300	265	230	20	13.5	282	158	4	72
Dimensions in millimetres (mm)										

Type	a	b	c	d	i	Design with motor extensions				
						i_{TB}	Brake	Encoder	Brake with Encoder	Back Stop
							d_{ML}	d_{ML}	d_{ML}	d_{ML}
BK40G10-../D..05.A.	170.5	300	123	772.5	101.5	117	814.5	875	912.5	-
BK40G10-../D..06.A.	170.5	300	123	772.5	101.5	119	814.5	875	912.5	-
BK40G10-../D..07.A.	190.5	300	123	792.5	101.5	119	834.5	895	932.5	-
BK40G10-../D..08.A.	199.5	304	156	805.5	116	136.5	871.5	917.5	979	871.5
BK40G10-../D..08.B.	229.5	304	156	835.5	116	136.5	901.5	947.5	1008.5	901.5
BK40G10-../D..09.A.	250.5	318.5	176	871	125.5	157	964	978.5	1068	964
BK40G10-../D..09.B.	308.5	318.5	176	929	125.5	157	1022	1036	1126	1022
Dimensions in millimetres (mm)										

The actual gearbox design can vary from the geometry shown. Generate drive specific 3D and 2D geometries under www.BauerCat.com.

BK40G10

Torque arm at front

Code -5.V/

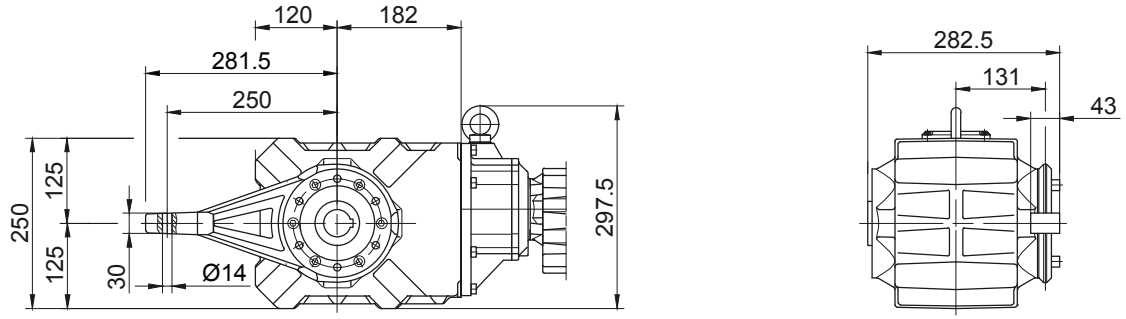

Flange with tapped holes at front

Code -7.V/

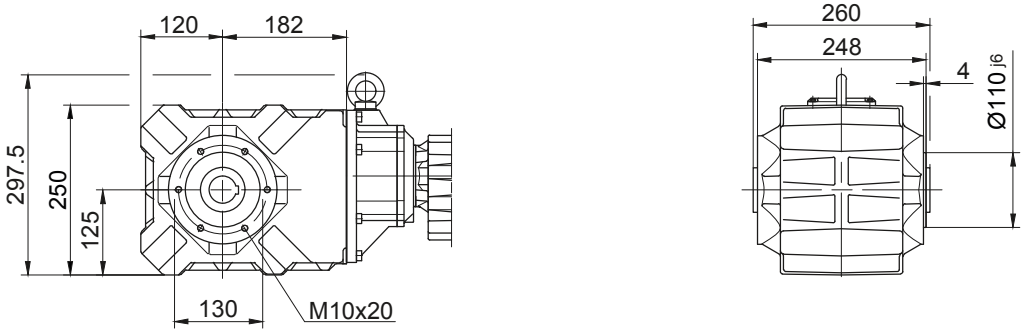

Foot with tapped holes at bottom

Code -6.U/

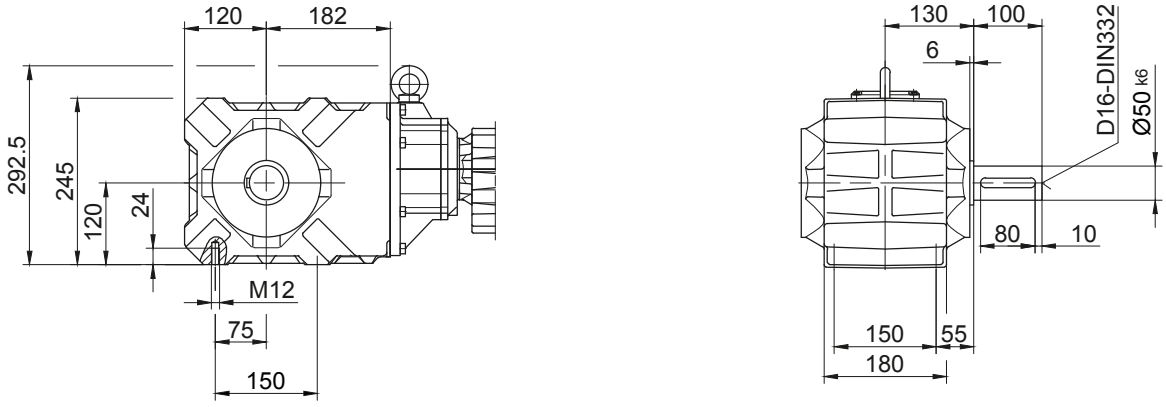

Foot with clearance holes at bottom

Code -1.U/

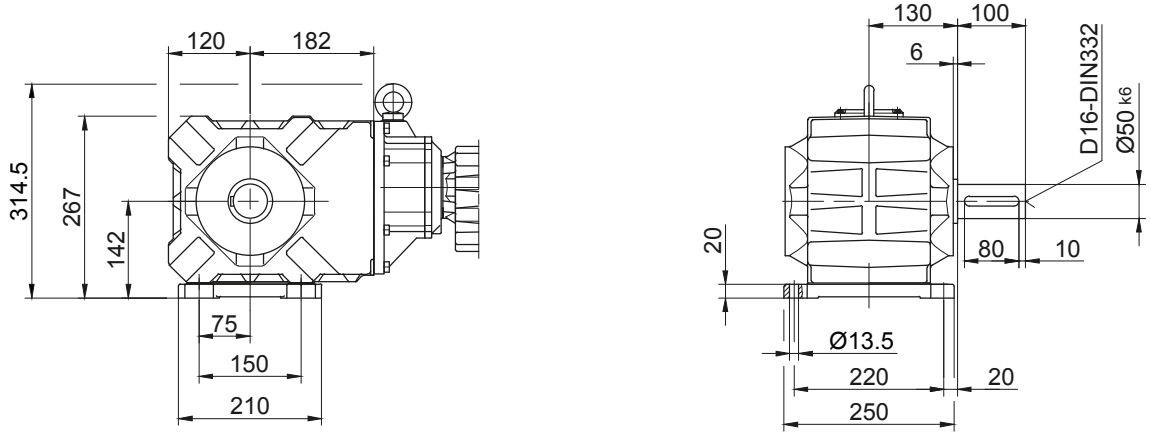

12

BK-series bevel-geared motors

Dimension - Tandem Gearbox

BK50G10

Flange with clearance holes at front

Code -3.V/

(Code -2.V/)

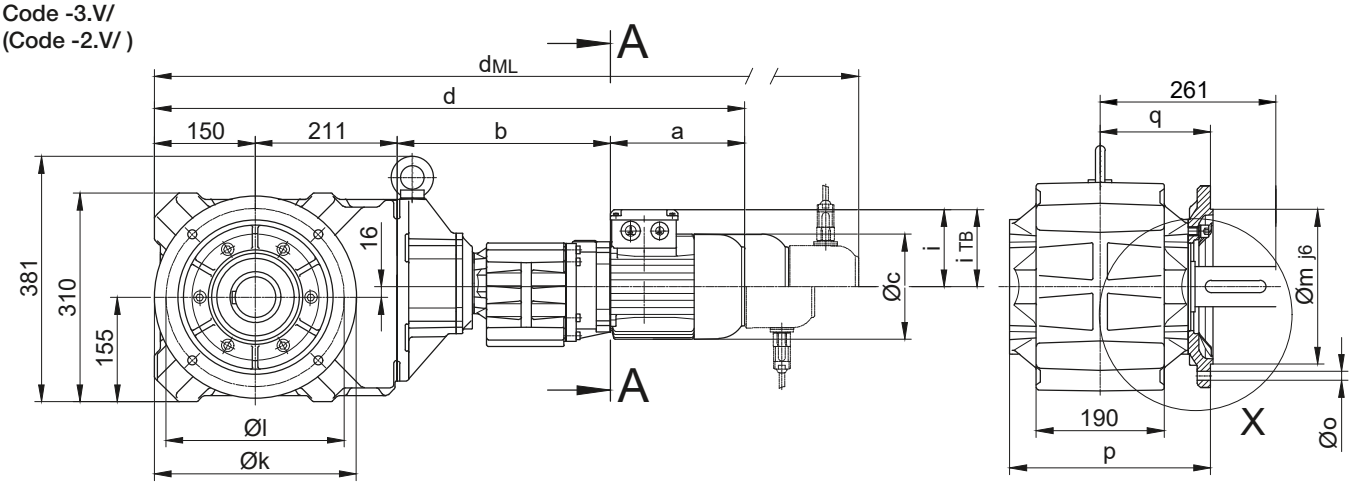

Code -.4/

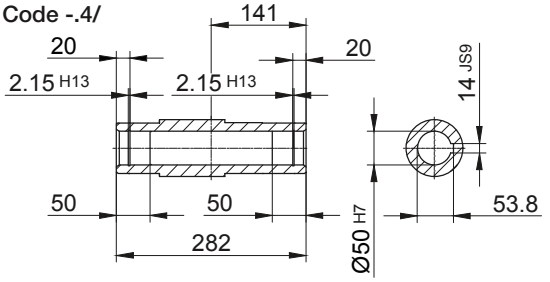

Code -.1/

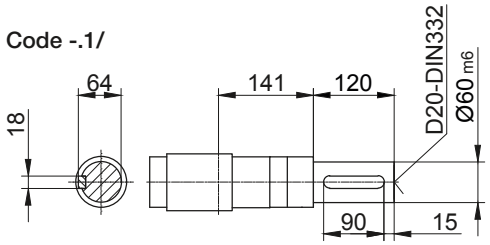

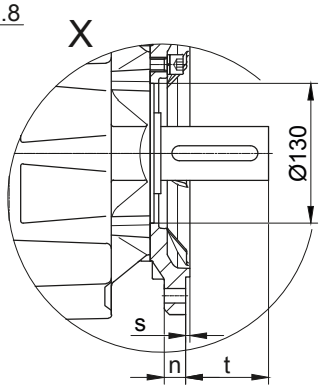

Code -.5/

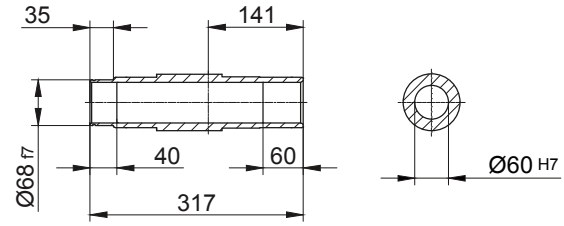

Code -.3/

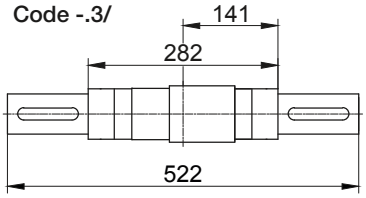

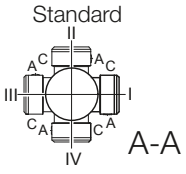

Flange Dimensions										
Type	Design	k	l	m	n	o	p	q	s	t
BK50..	Code -3.V/	300	265	230	20	13.5	299	164	4	97
BK50..	Code -2.V/	250	215	180	16	13.5	296	161	4	100
Dimensions in millimetres (mm)										

Type	a	b	c	d	i	Design with motor extensions				
						i_{TB}	Brake	Encoder	Brake with Encoder	Back Stop
							d_{ML}	d_{ML}	d_{ML}	d_{ML}
BK50G10-../D..05.A.	170.5	313	123	844.5	101.5	117	886.5	947	984.5	-
BK50G10-../D..06.A.	170.5	313	123	844.5	101.5	119	886.5	947	984.5	-
BK50G10-../D..07.A.	190.5	313	123	864.5	101.5	119	906.5	967	1004.5	-
BK50G10-../D..08.A.	199.5	317	156	877.5	116	136.5	943.5	989.5	1051	943.5
BK50G10-../D..08.B.	229.5	317	156	907.5	116	136.5	973.5	1019.5	1080.5	973.5
BK50G10-../D..09.A.	250.5	331.5	176	943	125.5	157	1036	1050.5	1140	1036
BK50G10-../D..09.B.	308.5	331.5	176	1001	125.5	157	1094	1108	1198	1094
Dimensions in millimetres (mm)										

The actual gearbox design can vary from the geometry shown. Generate drive specific 3D and 2D geometries under www.BauerCat.com.

BK50G10

Torque arm at front

Code -5.V/

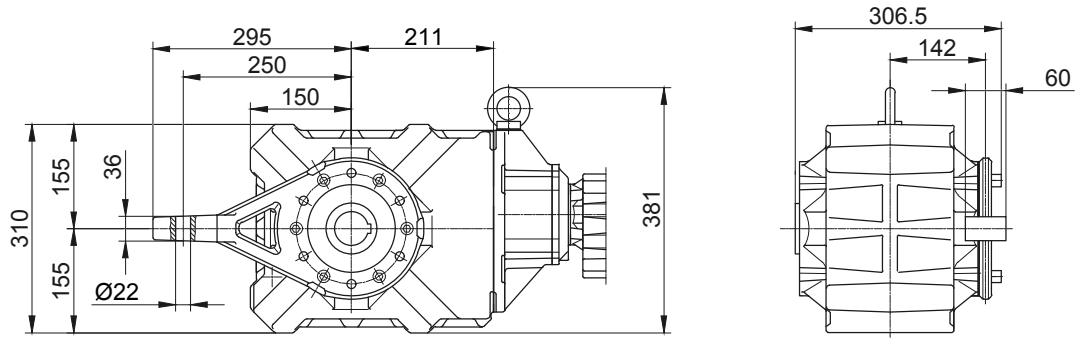

Flange with tapped holes at front

Code -7.V/

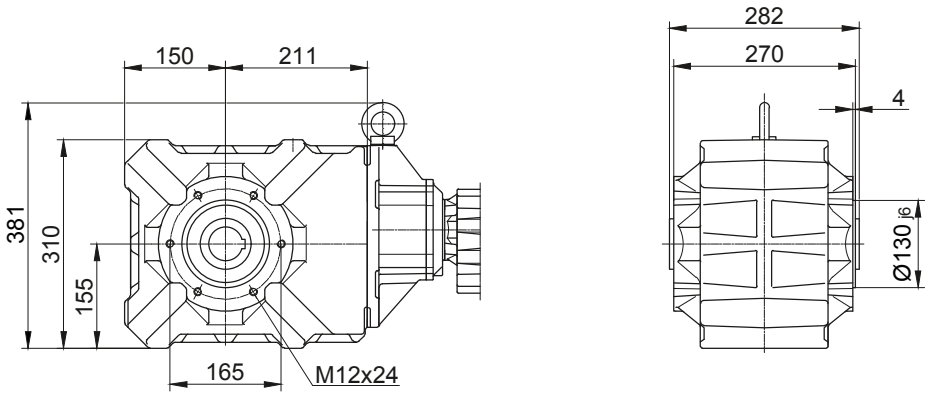

Foot with tapped holes at bottom

Code -6.U/

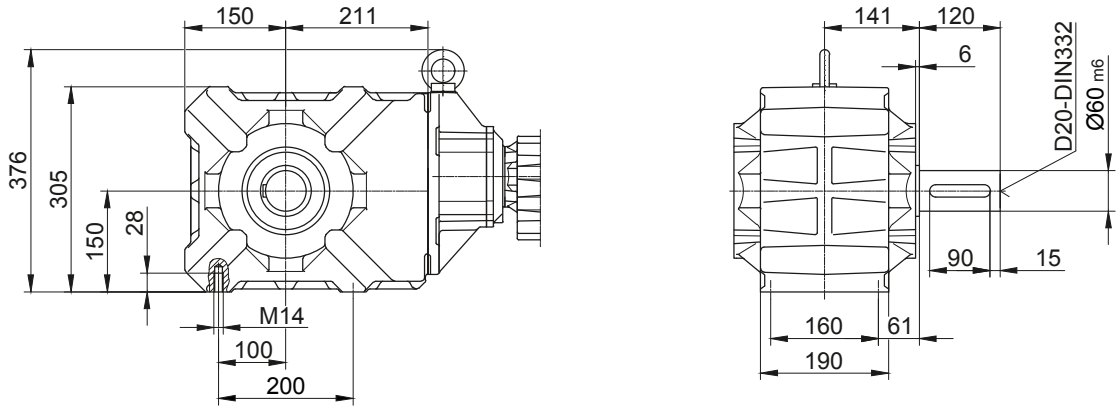

Foot with clearance holes at bottom

Code -1.U/

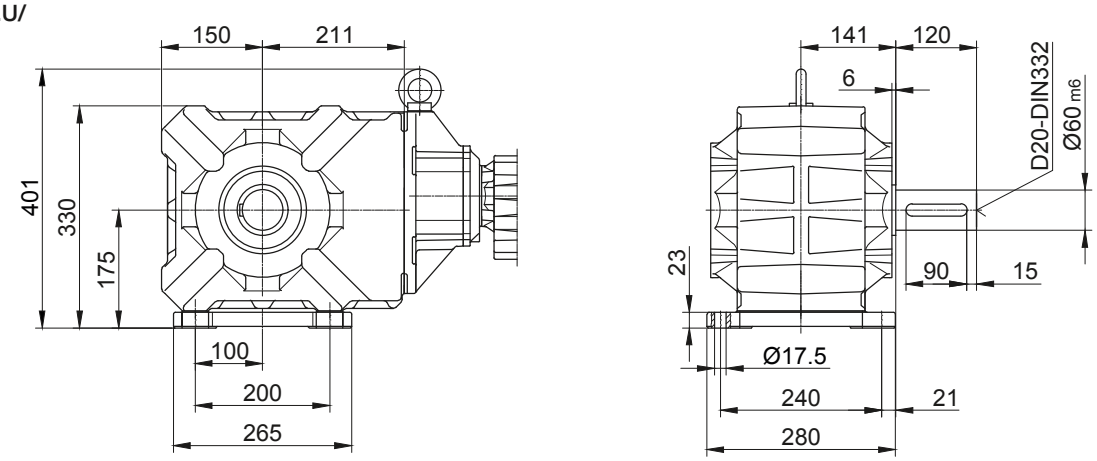

BK-series bevel-geared motors

Dimension - Tandem Gearbox

BK60G20

Flange with clearance holes at front

Code -3.V/

(Code -2.V/)

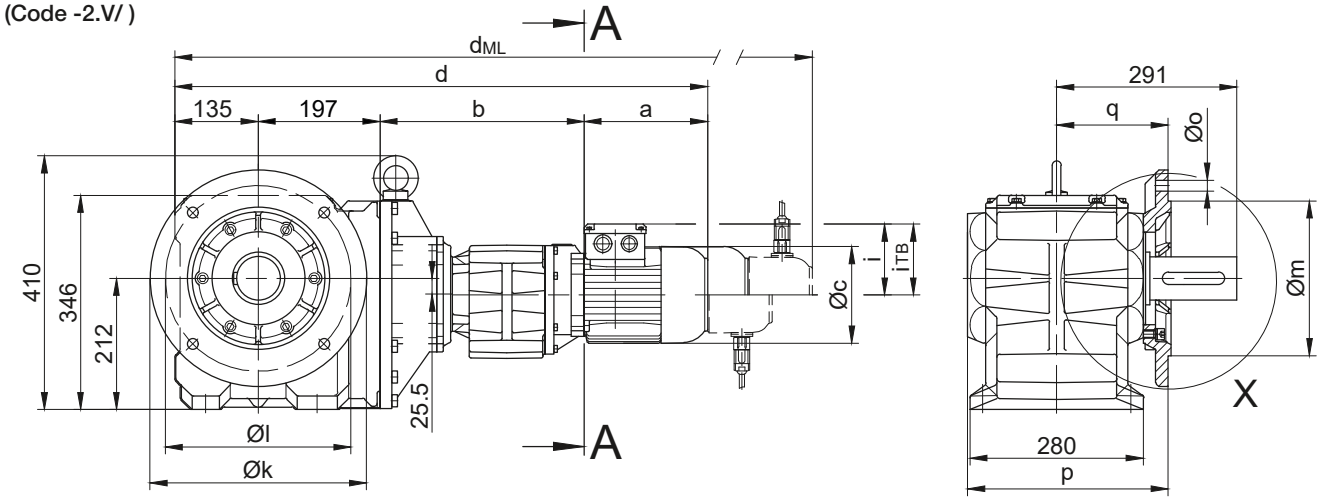

Code -.4/

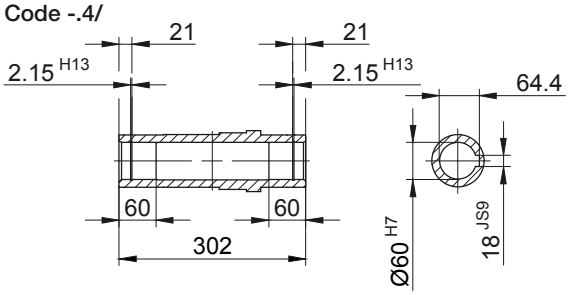

Code -.1/

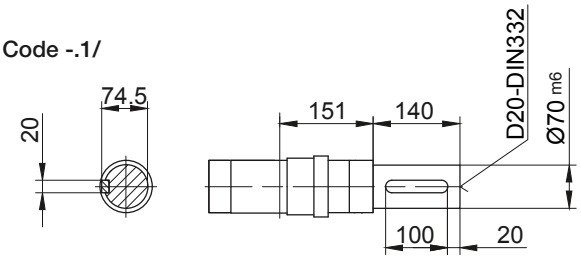

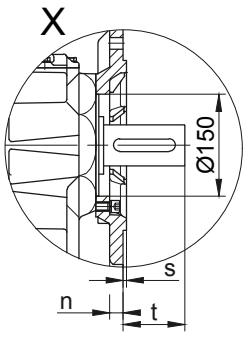

Code -.5/

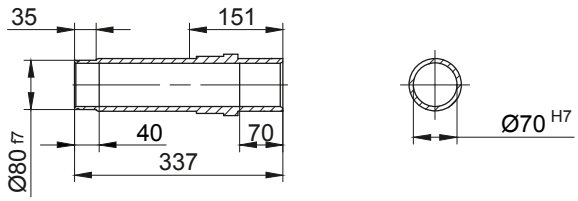

Code -.3/

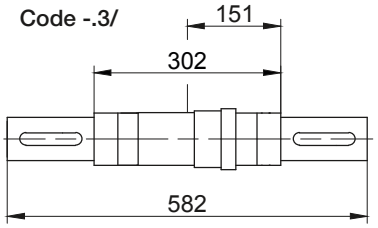

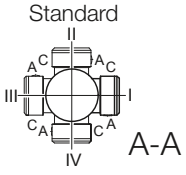

Flange Dimensions										
Type	Design	k	l	m	n	o	p	q	s	t
BK60..	Code -3.V/	350	300	250	20	17.5	324	180	5	112
BK60..	Code -2.V/	300	265	230	20	13.5	332	188	4	103
Dimensions in millimetres (mm)										

Type	a	b	c	d	i	Design with motor extensions				
						i_{TB}	Brake	Encoder	Brake with Encoder	Back Stop
							d_{ML}	d_{ML}	d_{ML}	d_{ML}
BK60G20-../D..05.A.	170.5	326	123	828.5	101.5	117	870.5	931	968.5	-
BK60G20-../D..06.A.	170.5	326	123	828.5	101.5	119	870.5	931	968.5	-
BK60G20-../D..07.A.	190.5	326	123	848.5	101.5	119	890.5	951	988.5	-
BK60G20-../D..08.A.	199.5	330	156	861.5	116	136.5	927.5	973.5	1035	927.5
BK60G20-../D..08.B.	229.5	330	156	891.5	116	136.5	957.5	1003.5	1064.5	957.5
BK60G20-../D..09.A.	250.5	344.5	176	927	125.5	157	1020	1034.5	1124	1020
BK60G20-../D..09.B.	308.5	344.5	176	985	125.5	157	1078	1092	1182	1078
Dimensions in millimetres (mm)										

The actual gearbox design can vary from the geometry shown. Generate drive specific 3D and 2D geometries under www.BauerCat.com.

BK60G20

Torque arm at front
Code -5.V/

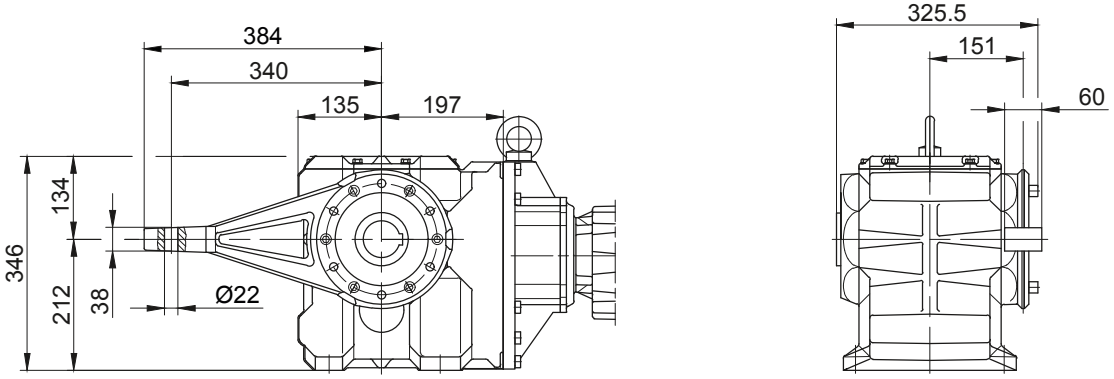

Flange with tapped holes at front
Code -7.V/

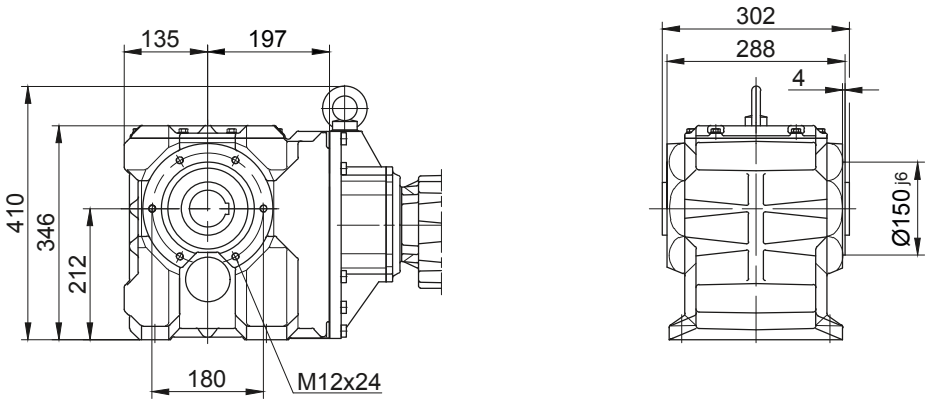

Foot with clearance holes at bottom
Code -1.U/

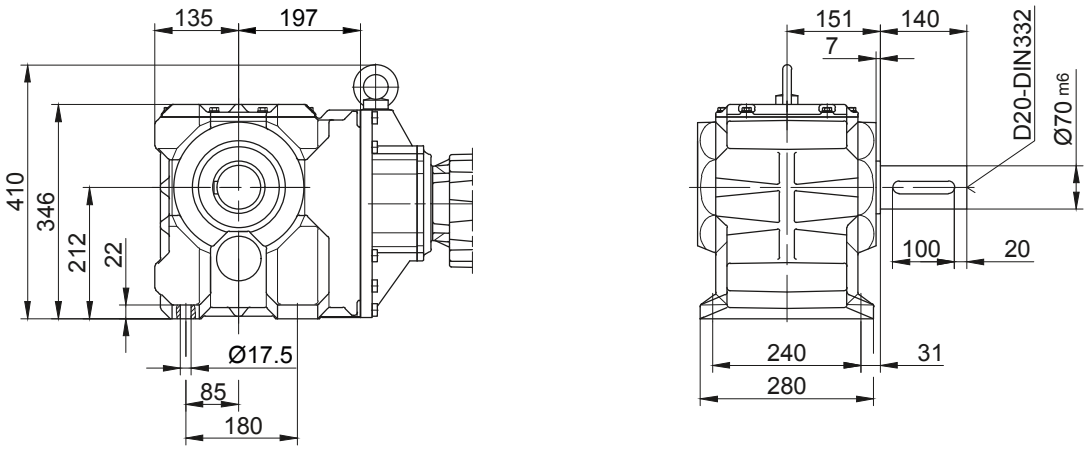

12

BK-series bevel-geared motors

Dimension - Tandem Gearbox

BK70G20

Flange with clearance holes at front
Code -3.V/
(Code -2.V/)
(Code -4.V/)

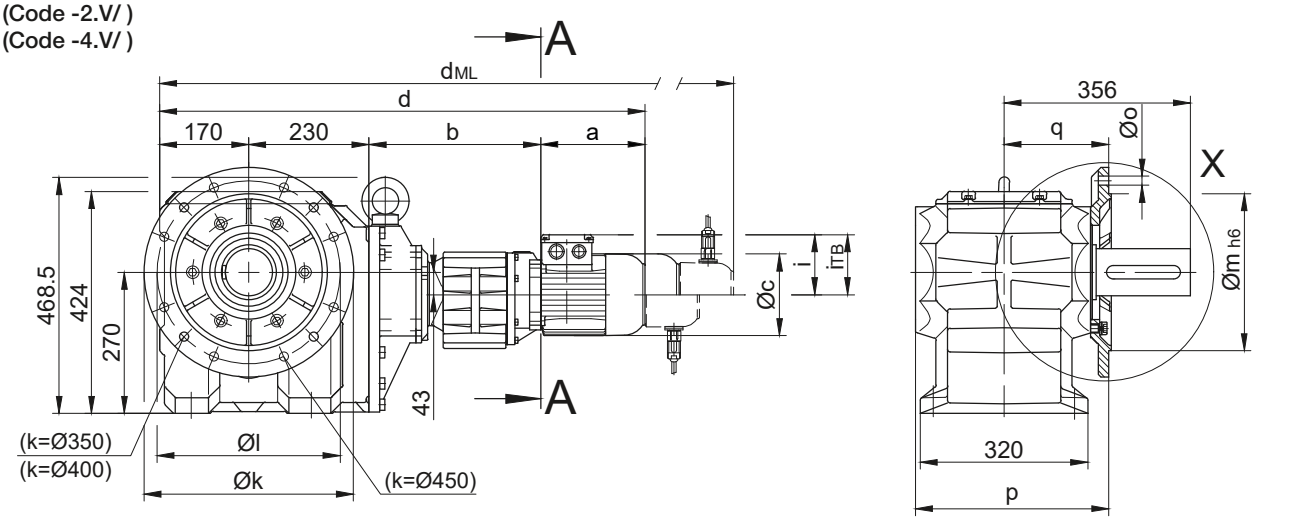

Code -.4/

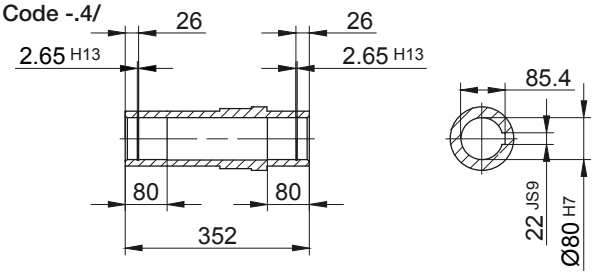

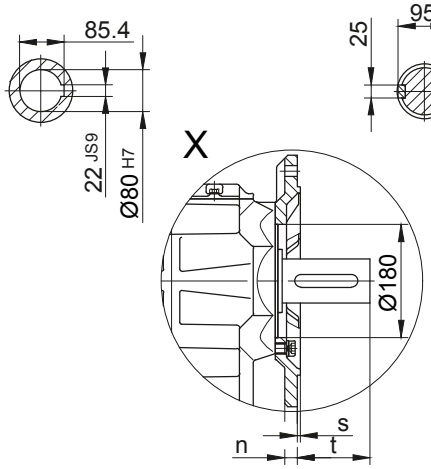

Code -.1/

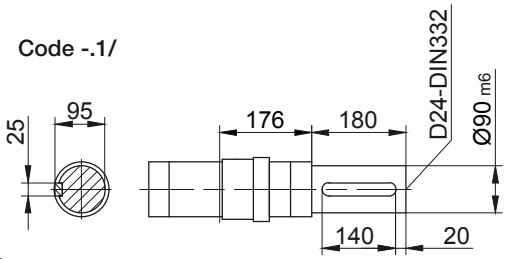

Code -.5/

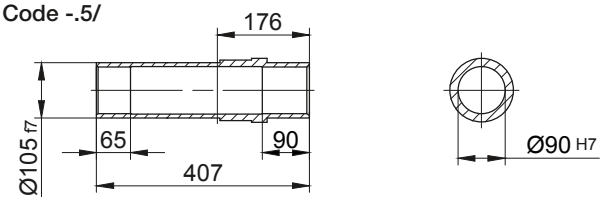

Code -.3/

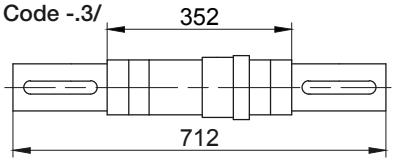

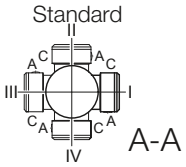

Flange Dimensions										
Type	Design	k	l	m	n	o	p	q	s	t
BK70..	Code -3.V/	400	350	300	20	4 x 17.5	369	200	5	157
BK70..	Code -2.V/	350	300	250	20	4 x 17.5	369	200	5	157
BK70..	Code -4.V/	450	400	350	22	4 x 17.5	379	210	5	147
Dimensions in millimetres (mm)										

Type	a	b	c	d	i	Design with motor extensions				
						i_{TB}	Brake	Encoder	Brake with Encoder	Back Stop
							d_{ML}	d_{ML}	d_{ML}	d_{ML}
BK70G20-../D..05.A.	170.5	326	123	896.5	101.5	117	938.5	999	1036.5	-
BK70G20-../D..06.A.	170.5	326	123	896.5	101.5	119	938.5	999	1036.5	-
BK70G20-../D..07.A.	190.5	326	123	916.5	101.5	119	958.5	1019	1056.5	-
BK70G20-../D..08.A.	199.5	330	156	929.5	116	136.5	995.5	1041.5	1103	995.5
BK70G20-../D..08.B.	229.5	330	156	959.5	116	136.5	1025.5	1071.5	1132.5	1025.5
BK70G20-../D..09.A.	250.5	344.5	176	995	125.5	157	1088	1102.5	1192	1088
BK70G20-../D..09.B.	308.5	344.5	176	1053	125.5	157	1146	1160	1250	1146
Dimensions in millimetres (mm)										

The actual gearbox design can vary from the geometry shown. Generate drive specific 3D and 2D geometries under www.BauerCat.com.

BK70G20

Torque arm at front

Code -5.V/

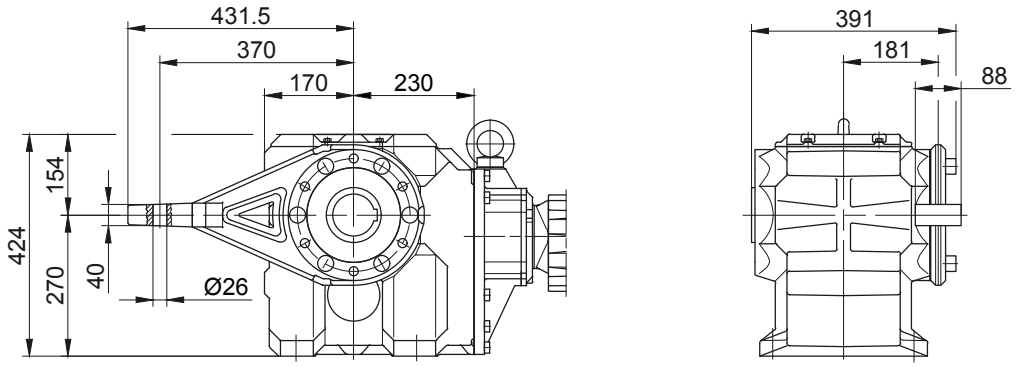

Flange with tapped holes at front

Code -7.V/

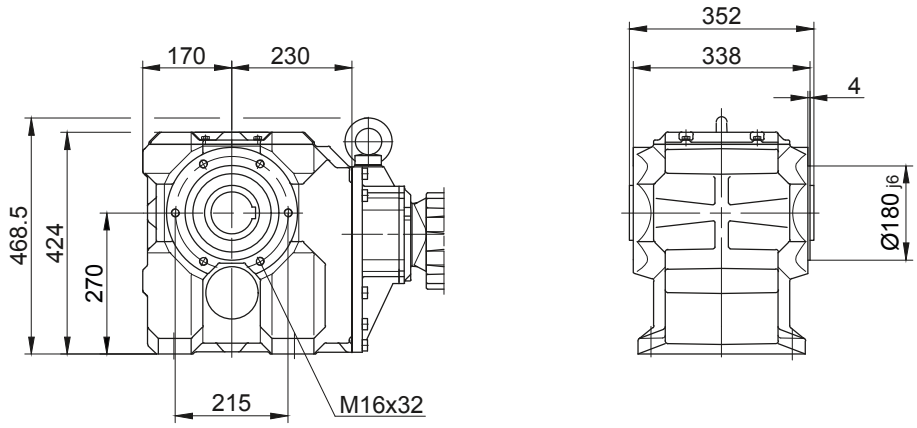

Foot with clearance holes at bottom

Code -1.U/

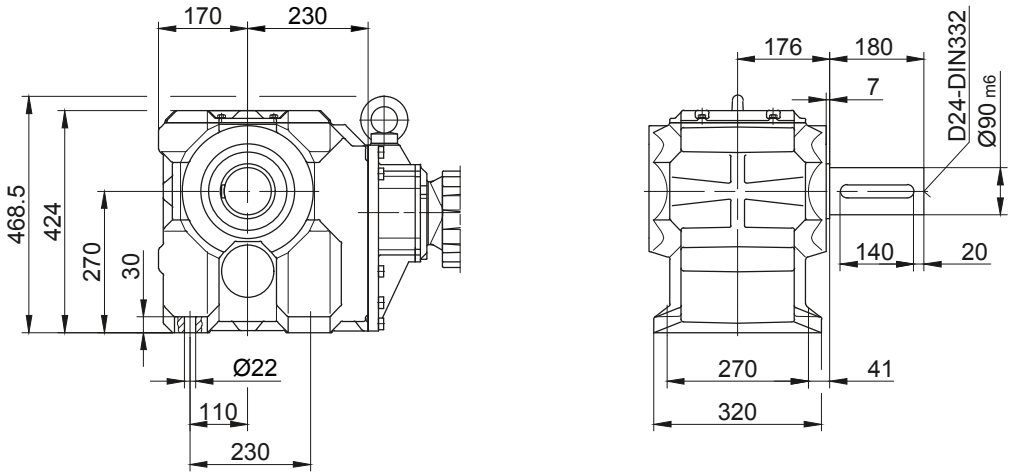

Code -.4/K70

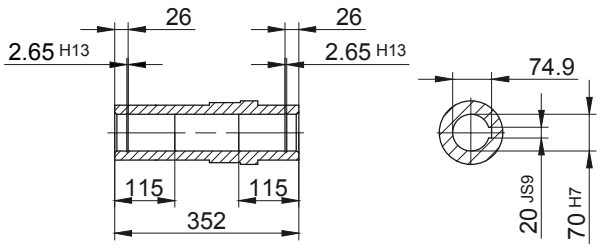

The actual gearbox design can vary from the geometry shown. Generate drive specific 3D and 2D geometries under www.BauerCat.com.

BK-series bevel-geared motors

Dimension - Tandem Gearbox

BK80G40

Flange with clearance holes at front

Code -3.V/
(Code -4.V/)

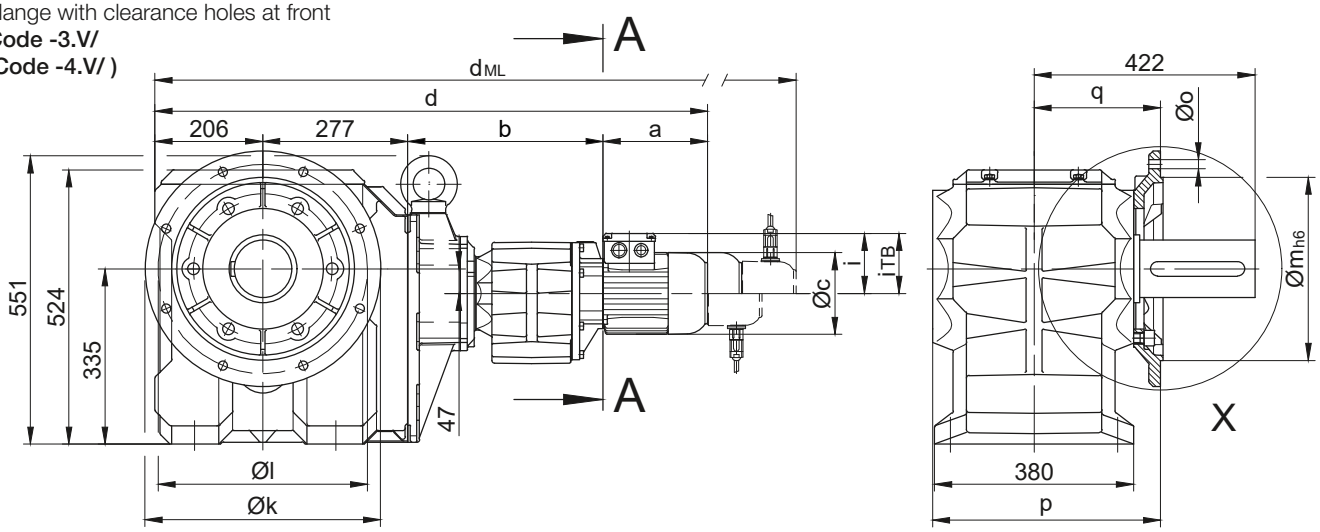

Code -.4/

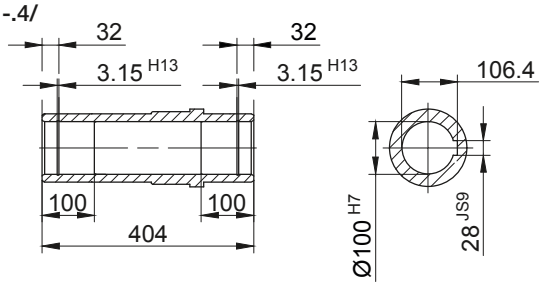

Code -.1/

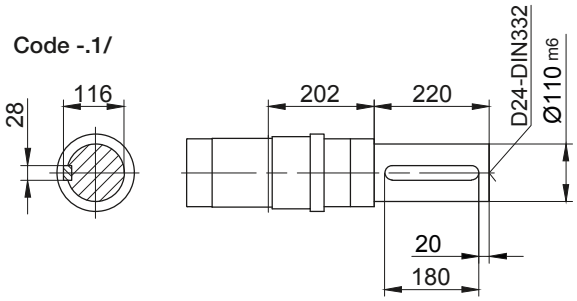

Code -.5/

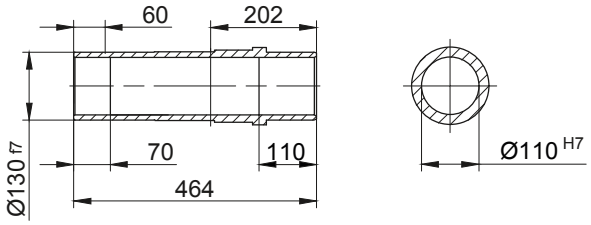

Code -.3/

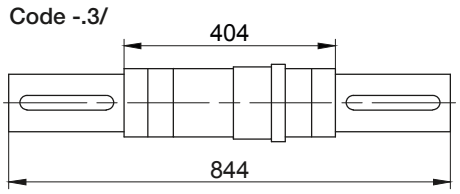

Code -.4/K90

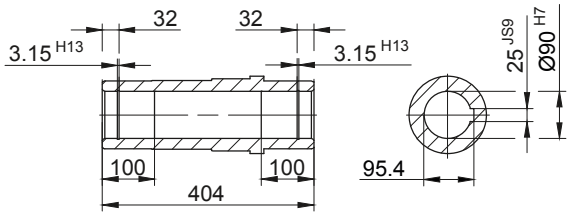

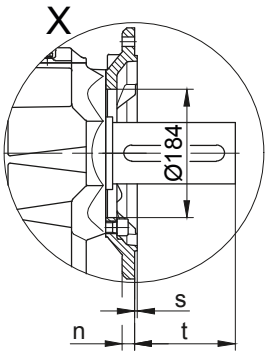

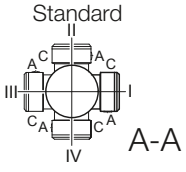

Flange Dimensions										
Type	Design	k	l	m	n	o	p	q	s	t
BK80..	Code -3.V/	450	400	350	22	17.5	439	245	5	178
BK80..	Code -4.V/	550	500	450	22	17.5	444	250	5	173
Dimensions in millimetres (mm)										

Type	a	b	c	d	i	Design with motor extensions				
						i_{TB}	Brake	Encoder	Brake with Encoder	Back Stop
							d_{ML}	d_{ML}	d_{ML}	d_{ML}
BK80G40-../D..08.A.	199.5	357	156	1039.5	116	136.5	1105.5	1151.5	1213	1105.5
BK80G40-../D..08.B.	229.5	357	156	1069.5	116	136.5	1135.5	1181.5	1242.5	1135.5
BK80G40-../D..09.A.	250.5	371.5	176	1105	125.5	157	1198	1212.5	1302	1198
BK80G40-../D..09.B.	308.5	371.5	176	1163	125.5	157	1256	1270	1360	1256
BK80G40-../D..11.A.	319	378	218	1180	165	176	1278	1287.5	1380	1278
BK80G40-../D..11.B.	387	378	218	1248	165	176	1344	1355.5	1448	1344
Dimensions in millimetres (mm)										

The actual gearbox design can vary from the geometry shown. Generate drive specific 3D and 2D geometries under www.BauerCat.com.

BK80G40

Torque arm at front
Code -5.V/

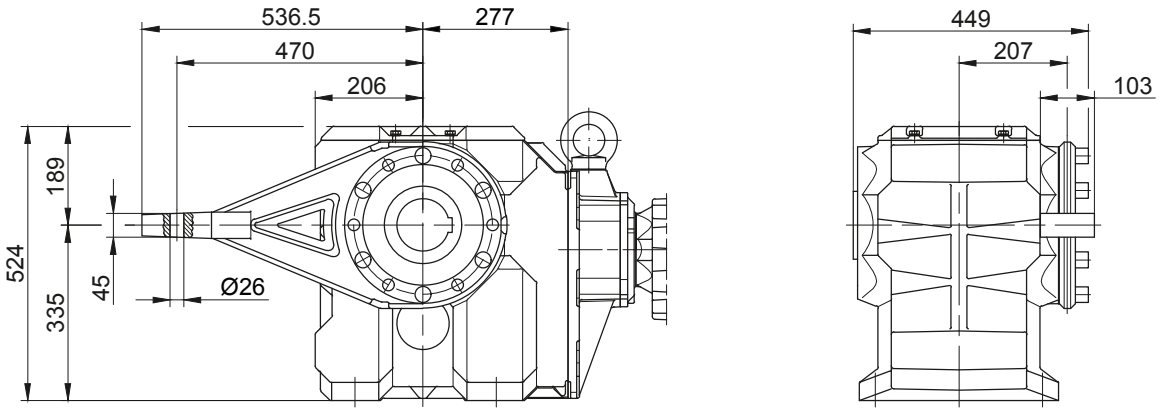

Flange with tapped holes at front
Code -7.V/

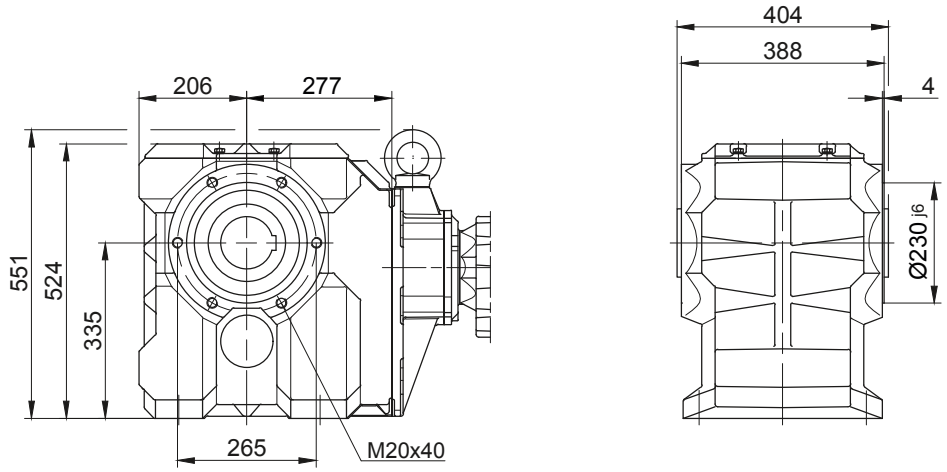

Foot with clearance holes at bottom
Code -1.U/

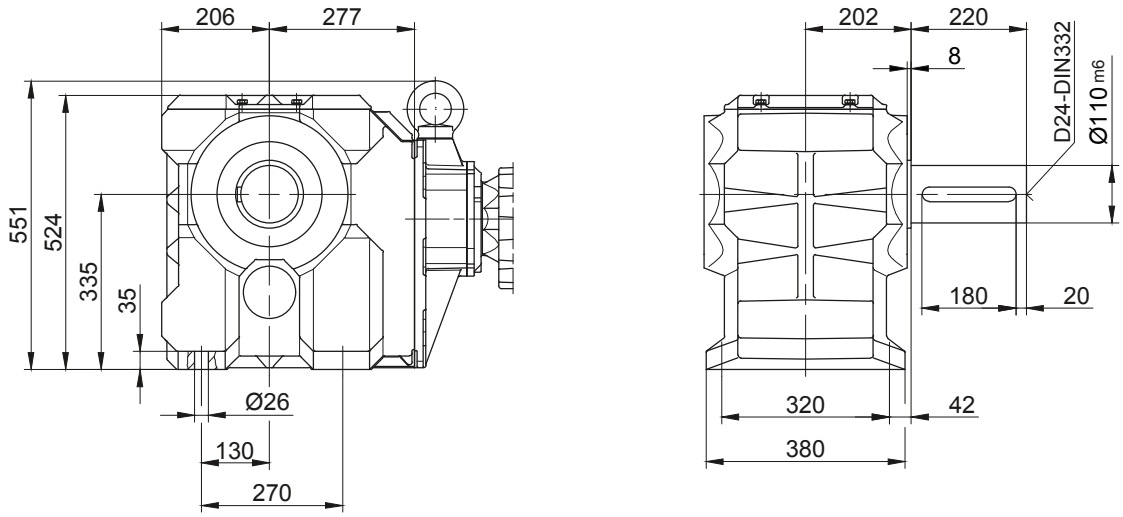

12

BK-series bevel-geared motors

Dimension - Tandem Gearbox

BK90G50

Flange with clearance holes at front

Code -3.V/
(Code -4.V/)

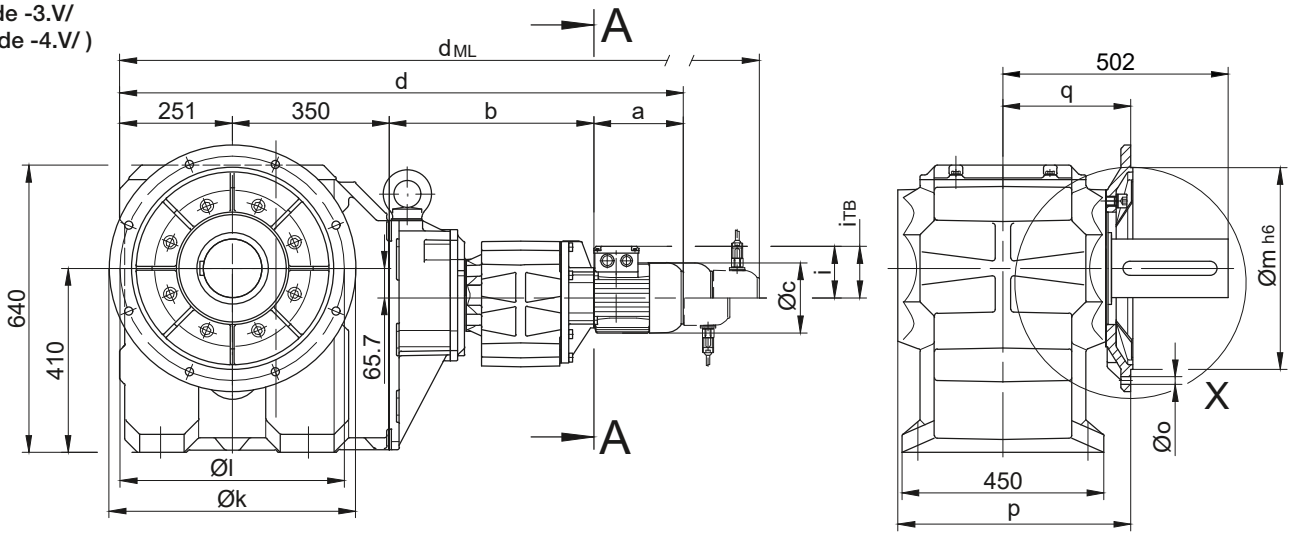

Code -.4/

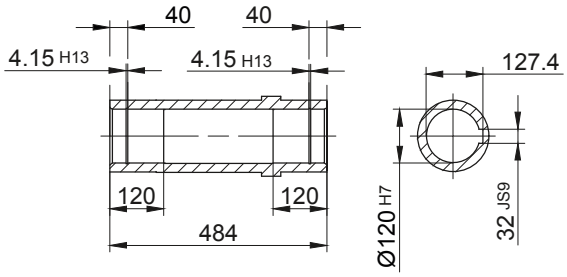

Code -.1/

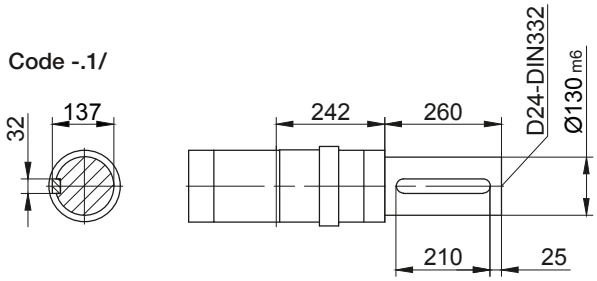

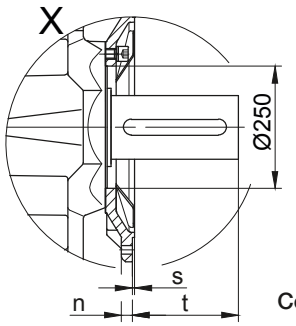

Code -.5/

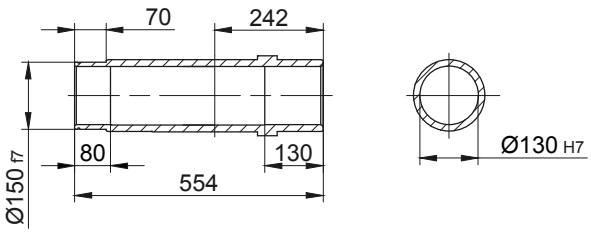

Code -.3/

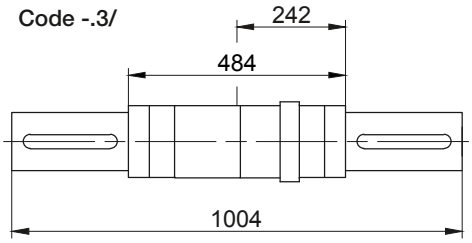

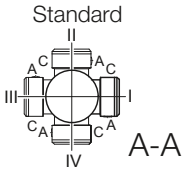

Flange Dimensions										
Type	Design	k	l	m	n	o	p	q	s	t
BK90..	Code -3.V/	550	500	450	22	17.5	519	285	5	218
BK90..	Code -4.V/	660	600	550	25	22	513	279	6	225
Dimensions in millimetres (mm)										

Type	a	b	c	d	i	Design with motor extensions				
						i_{TB}	Brake	Encoder	Brake with Encoder	Back Stop
							d_{ML}	d_{ML}	d_{ML}	d_{ML}
BK90G50-../D..08.A.	199.5	427	156	1227.5	116	136.5	1293.5	1339.5	1401	1293.5
BK90G50-../D..08.B.	229.5	427	156	1257.5	116	136.5	1323.5	1369.5	1430.5	1323.5
BK90G50-../D..09.A.	250.5	441.5	176	1293	125.5	157	1386	1400.5	1490	1386
BK90G50-../D..09.B.	308.5	441.5	176	1351	125.5	157	1444	1458	1548	1444
BK90G50-../D..11.A.	319	448	218	1368	165	176	1466	1475.5	1568	1466
BK90G50-../D..11.B.	387	448	218	1436	165	176	1532	1543.5	1636	1532
BK90G50-../D..13.A.	393	461	258	1455	217	217	1566	1562	1667	1563
BK90G50-../D..16.B.	454.5	475	310	1530.5	243	243	1674	1637.5	1777.5	1674
BK90G50-../D..18.B.	542	497	348	1640	288	288	1789.5	1745.5	1893	1789.5
Dimensions in millimetres (mm)										

The actual gearbox design can vary from the geometry shown. Generate drive specific 3D and 2D geometries under www.BauerCat.com.

BK90G50

Torque arm at front

Code -5.V/

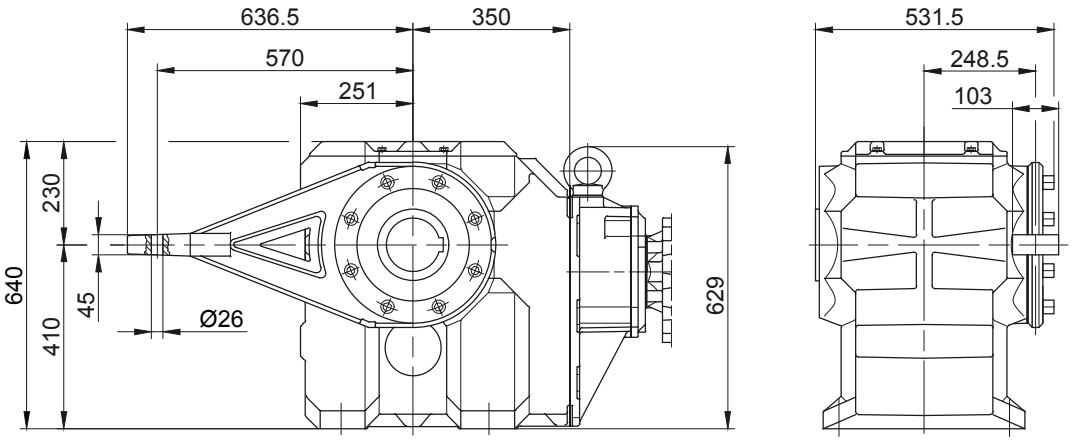

Flange with tapped holes at front

Code -7.V/

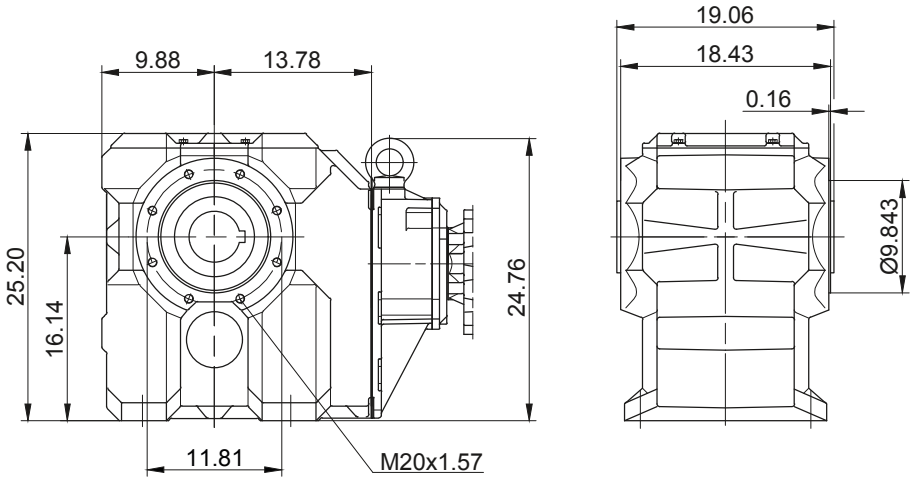

Foot with clearance holes at bottom

Code -1.U/

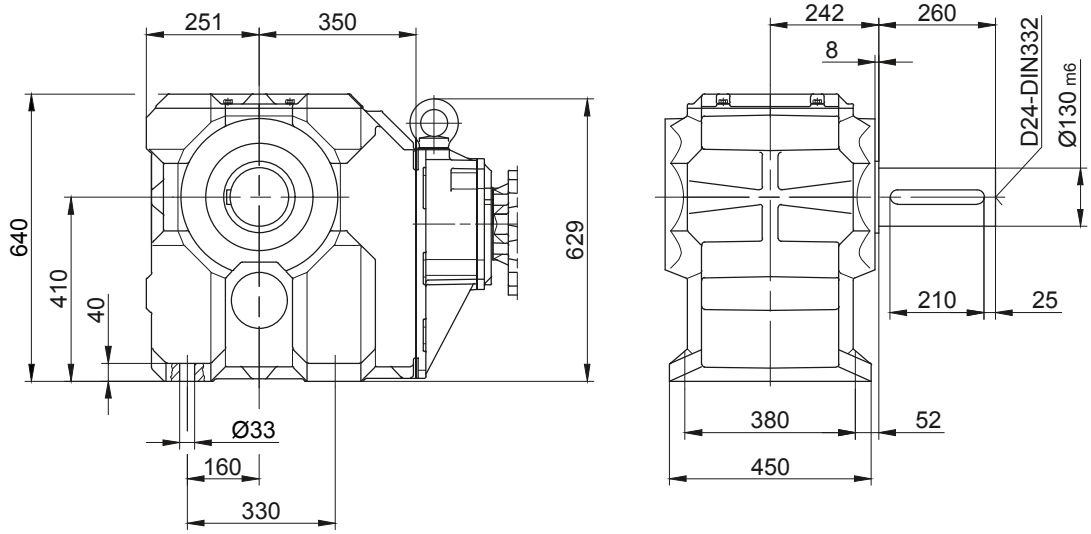

Splined shaft

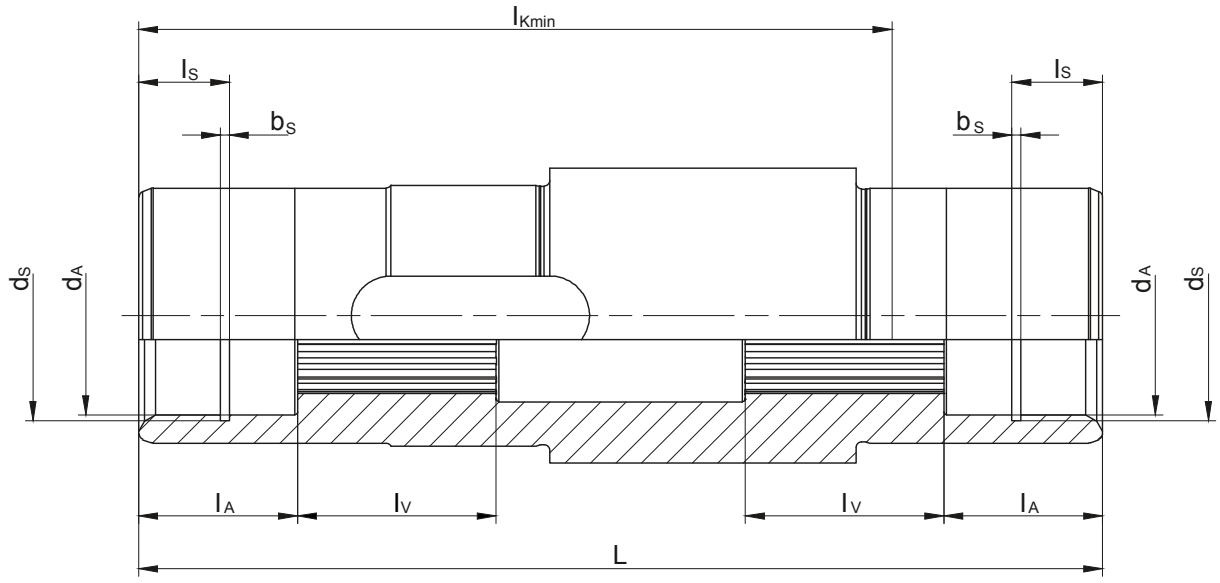

Type	Splined shaft acc. to DIN 5480	d_A	l_A	l_V	l_{Kmin}	L	d_S	l_S	b_S
BK10	N30x1.25x22x9H	35^{G7}	28	35	132	170	37^{H12}	16	1.6^{H13}
BK20	N35x2x16x9H	36^{G7}	28	35	154	192	37^{H12}	16	1.6^{H13}
BK30	N40x2x18x9H	41^{G7}	25	42	179	224	42.5^{H12}	17	1.85^{H13}
BK40	N50x2x24x9H	51^{G7}	25	49	214	260	53^{H12}	17	2.15^{H13}
BK50	N60x2x28x9H	61^{G7}	25	58	229	282	63^{H12}	17	2.15^{H13}
BK60	N70x2x34x9H	72^{G7}	25	72	248	302	75^{H12}	17	2.65^{H13}
BK70	N85x3x27x9H	86^{G7}	26	100	295	352	88.5^{H12}	17	3.15^{H13}
BK80	N110x3x35x9H	112^{G7}	60	90	335	404	116^{H12}	30	4.15^{H13}
BK90	N130x5x24x9H	131.5^{G7}	60	110	410	484	134^{H12}	30	4.15^{H13}
Dimensions in millimetres (mm)									

Shrink disc couplings (SSV)

(Code BK10-.5/...)
(Code BK10Z-.5/...)

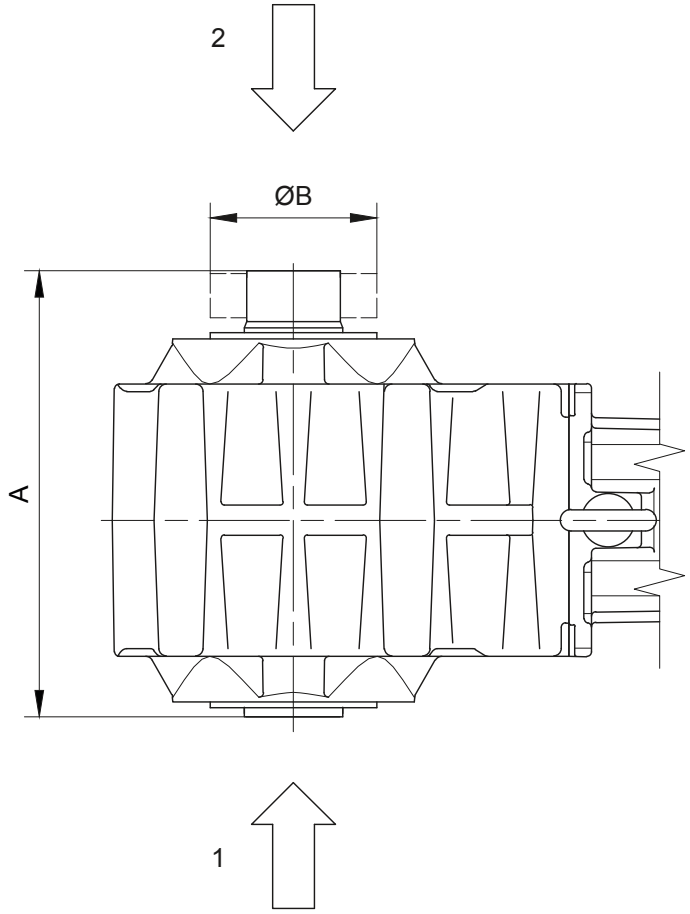

1 Gear side FRONT (V)
2 Gear side REAR (H)

Type	SSV Ringfeder	SSV STÜWE	A	B
BK06	RfN 4161 024x050	HSD 24-22x24	118	50
BK10	RfN 4161 036x072	HSD 36-22x36	195	72
BK20	RfN 4161 044x080	HSD 44-22x44	222	80
BK30	RfN 4161 050x090	HSD 50-22x50	254	90
BK40	RfN 4161 062x110	HSD 62-22x62	295	110
BK50	RfN 4161 068x115	HSD 68-22x68	317	115
BK60	RfN 4161 080x141	HSD 80-22x80	337	140
BK70	RfN 4161 105x185	HSD 110-22x105	407	185
BK80	RfN 4161 130x215	HSD 125-22x130	464	215
BK90	RfN 4161 150x263	HSD 155-22x150	554	263
Dimensions in millimetres (mm)				

The actual gearbox design can vary from the geometry shown. Generate drive specific 3D and 2D geometries under www.BauerCat.com.

Shrink Disk Connection with Cover (SSV)

(Code BK10-.5A/...)
(Code BK10Z-.5A/...)

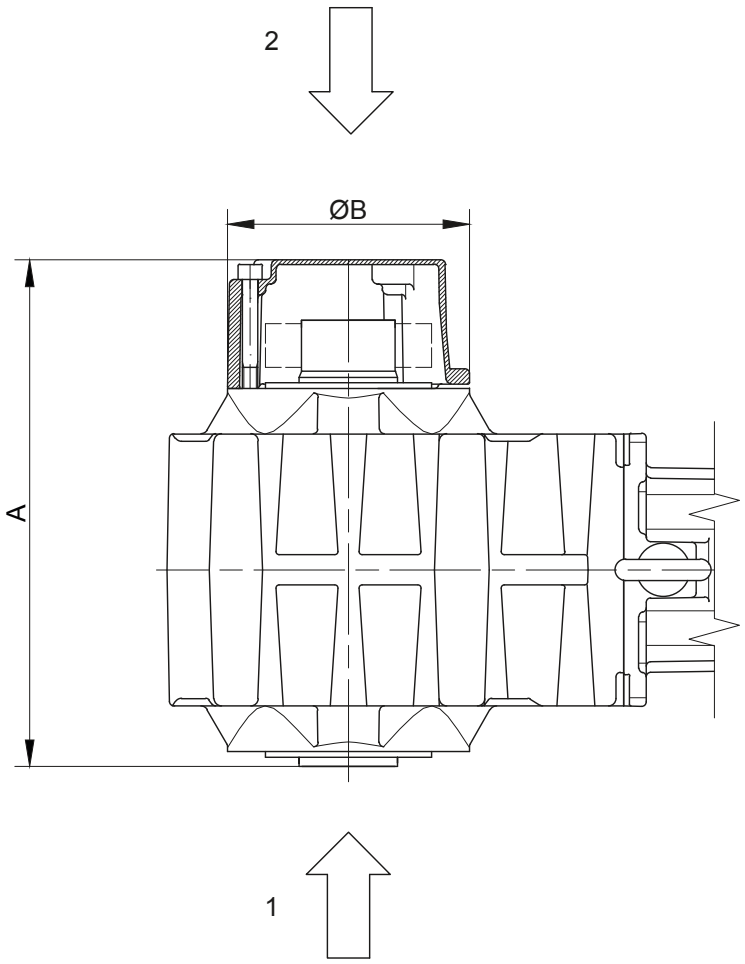

1 Gear side FRONT (V)
2 Gear side REAR (H)

Type	SSV Ringfeder	SSV STÜWE	A	B
BK10	RfN 4161 036x072	HSD 36-22x36	217	120
BK20	RfN 4161 044x080	HSD 44-22x44	270	140
BK30	RfN 4161 050x090	HSD 50-22x50	300	160
BK40	RfN 4161 062x110	HSD 62-22x62	335	160
BK50	RfN 4161 068x115	HSD 68-22x68	331	200
BK60	RfN 4161 080x141	HSD 80-22x80	386	210
BK70	RfN 4161 105x185	HSD110-22x105	465	250
BK80	RfN 4161 130x215	HSD125-22x130	505	300
BK90	RfN 4161 150x263	HSD155-22x150	602	350
Dimensions in millimetres (mm)				

The actual gearbox design can vary from the geometry shown. Generate drive specific 3D and 2D geometries under www.BauerCat.com.

BK-series bevel-geared motors

Additional Dimension Sheet

Rubber buffer for torque restraint

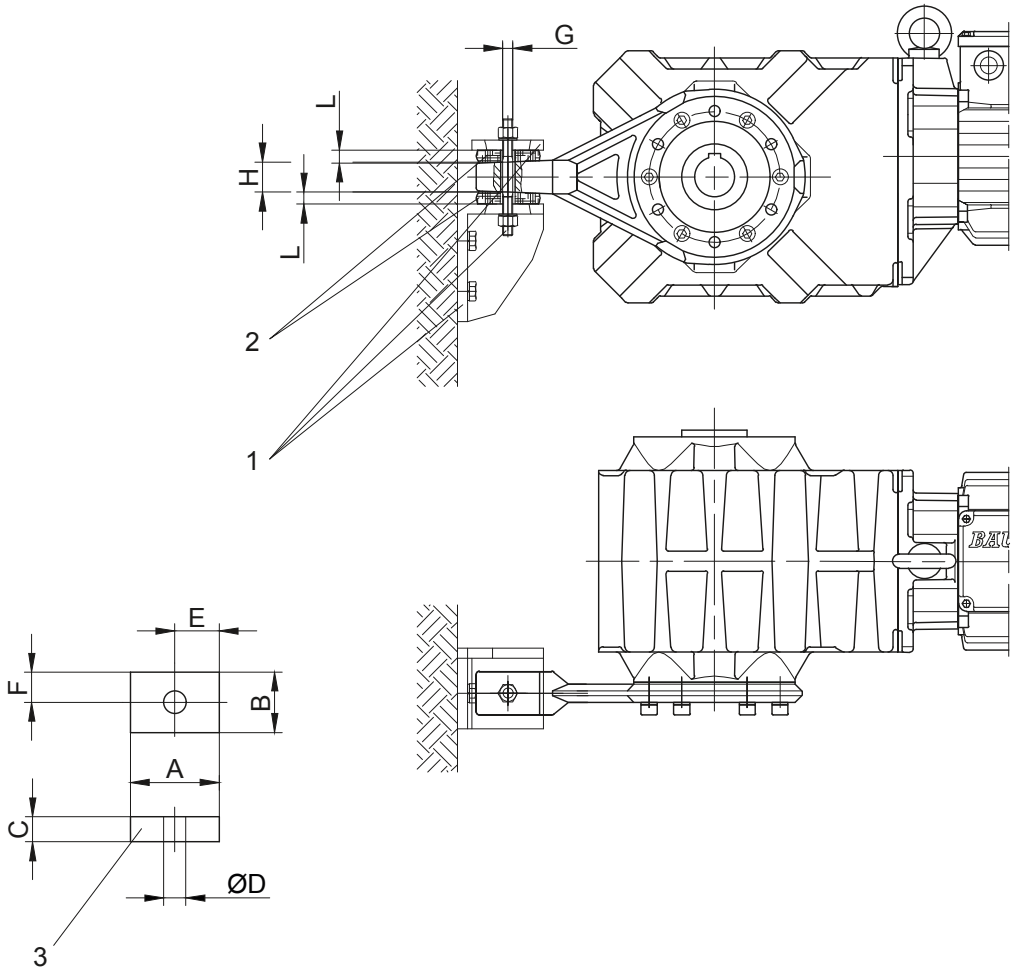

1 not included in delivery

2 Rubber buffers pretensioned

3 Rubber buffer

G maximaler Schraubendurchmesser

Material: Natural rubber
Hardness 50 +/-5 Shore A

Dimensions of the transverse hole:
see dimensioned sketch of the respective shaft mounted gearbox

12

Gear	Position	A	B	C	D	E	F	G	H	L
BK06	0	30	30	12	12	15	15	M10	10	10
BK08	1	48	32	15	14	24	16	M10	19	13.5
BK10	1	48	32	15	14	24	16	M10	19	13.5
BK17	1	48	32	15	14	24	16	M10	19	13
BK20	1	48	32	15	14	24	16	M10	19	13
BK30	2	63	43	20	14	31.5	21.5	M10	30	17
BK40	2	63	43	20	14	31.5	21.5	M10	30	17
BK50	3	88	60	25	22	44	30	M18	36	21.5
BK60	3	88	60	25	22	44	30	M18	38	21
BK70	4	123	88	30	26	61.5	44	M20	40	25.5
BK80	5	133	103	35	26	66.5	51.5	M20	45	30
BK90	5	133	103	35	26	66.5	51.5	M20	45	29.5
Dimensions in millimetres (mm)										

Position of the torque arm

BK06

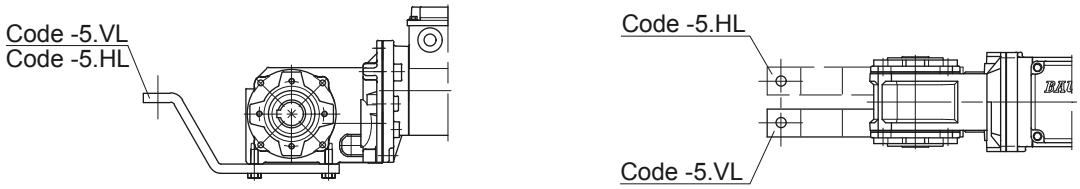

BK08 - BK90

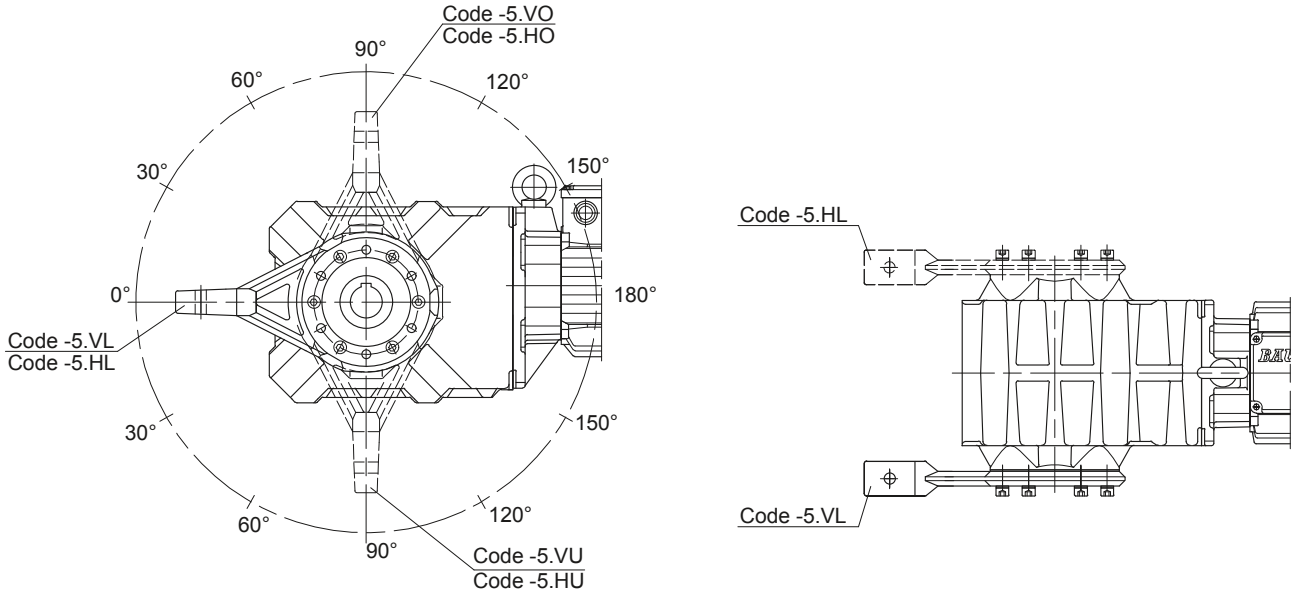

Gear	Position						
	VL/HL	VO/HO/VU/HU					VR/HR
BK06	0°	-	-	-	-	-	-
BK08	0°	30°	60°	90°	120°	-	-
BK10	0°	30°	60°	90°	120°	150°	-
BK17	0°	30°	60°	90°	120°	-	-
BK20	0°	30°	60°	90°	120°	150°	-
BK30	0°	30°	60°	90°	120°	150°	-
BK40	0°	30°	60°	90°	120°	150°	-
BK50	0°	30°	60°	90°	120°	150°	-
BK60	0°	30°	60°	90°	120°	150°	-
BK70	0°	30°	60°	90°	120°	150°	-
BK80	0°	30°	60°	90°	120°	150°	-
BK90	0°	45°		90°	135°		-

BK-series bevel-geared motors

Additional Dimension Sheet

Foot with tapped holes

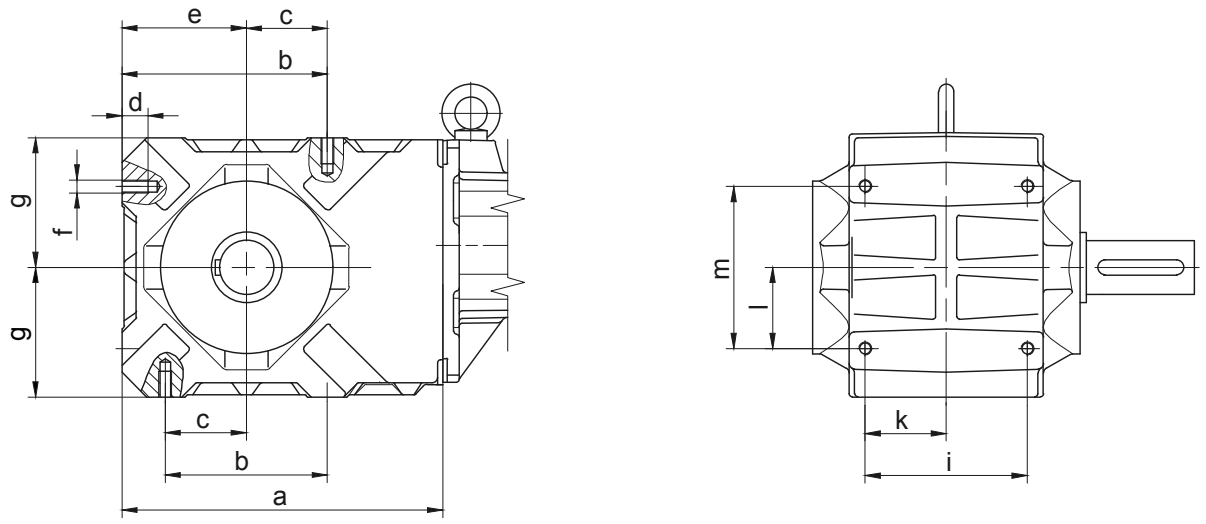

Type	a	b	c	d	e	f	g	i	k	l	m
BK10-BK10Z	202	90	45	16	78	M8	80	95	47.5	45	90
BK20-BK20Z	242	110	55	20	95	M10	100	105	52.5	55	110
BK30-BK30Z	266	125	62.5	24	105	M12	110	120	60	62.5	125
BK40-BK40Z	297	150	75	24	115	M12	120	150	75	75	150
BK50-BK50Z	356	200	100	28	145	M14	150	160	80	100	200

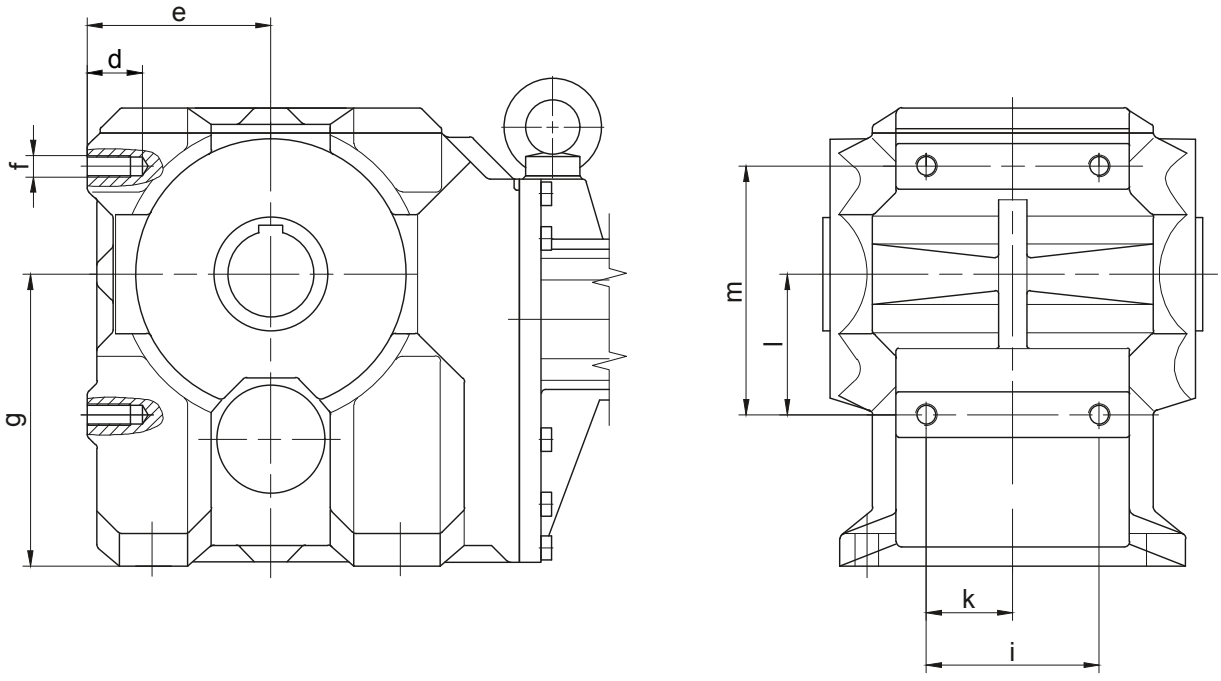

Type	a	b	c	d	e	f	g	i	k	l	m
BK60-BK60Z	-	-	-	40	130	M20	212	160	80	145	230
BK70-BK70Z	-	-	-	40	165	M20	270	160	80	130	230
BK80-BK80Z	-	-	-	60	200	M30	335	210	105	240	360
BK90-BK90Z	-	-	-	60	245	M30	410	210	105	215	360

The actual gearbox design can vary from the geometry shown. Generate drive specific 3D and 2D geometries under www.BauerCat.com.

Foot plate with clearance holes

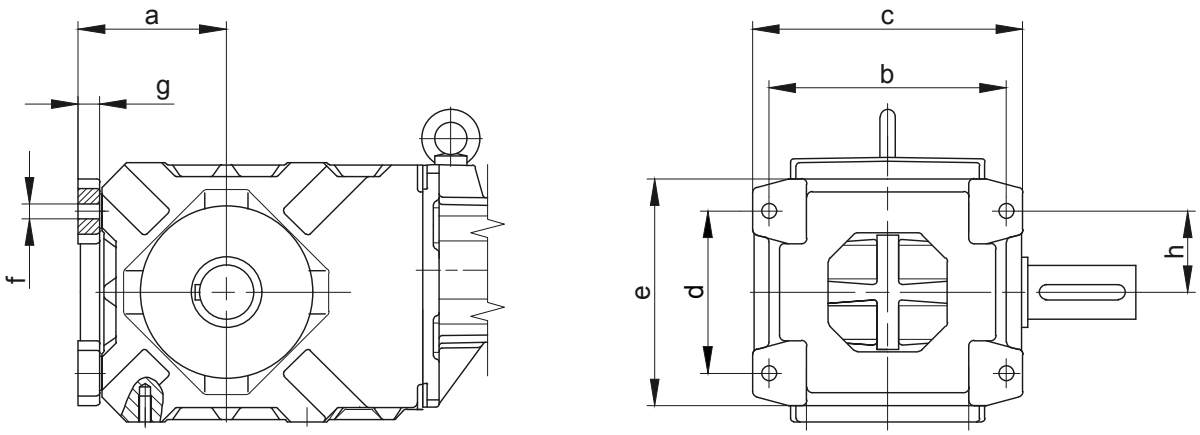

Type	a	b	c	d	e	f	g	h
BK10-BK10Z	96	145	165	90	130	Ø9	16	45
BK20-BK20Z	115	165	195	110	160	Ø11	18	55
BK30-BK30Z	127	190	220	125	185	Ø13.5	20	62.5
BK40-BK40Z	137	220	250	150	210	Ø13.5	20	75
BK50-BK50Z	170	240	280	200	265	Ø17.5	23	100

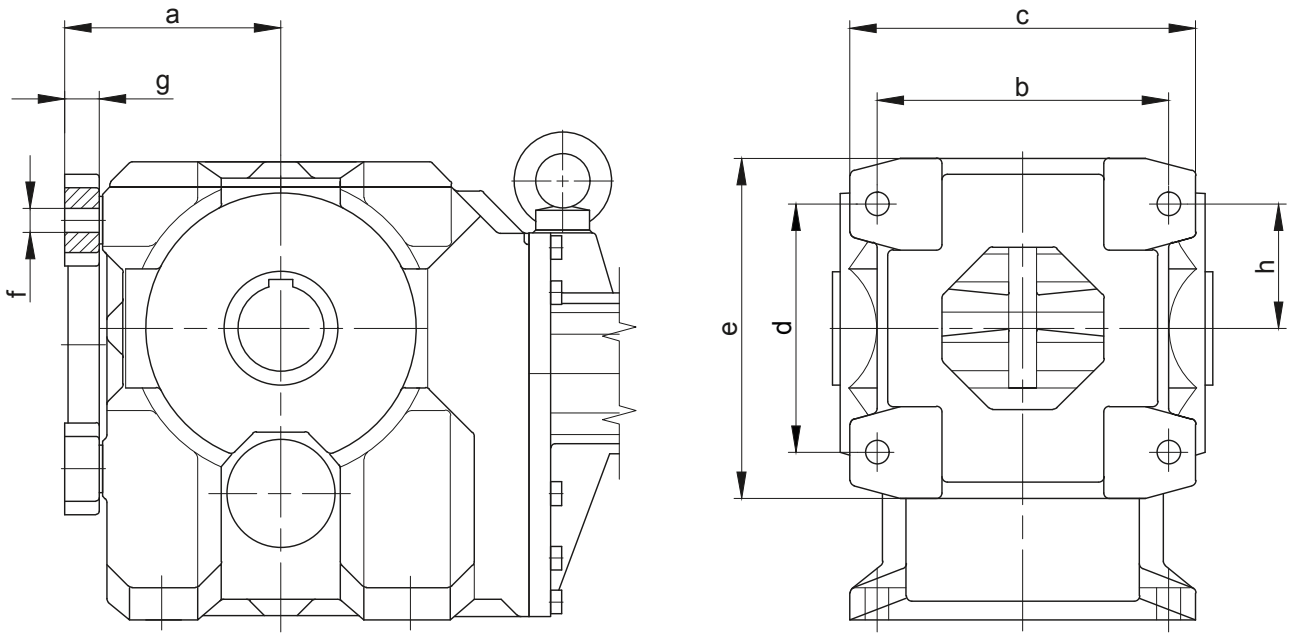

Type	a	b	c	d	e	f	g	h
BK60-BK60Z	165	270	320	230	315	Ø22	32	85
BK70-BK70Z	200	270	320	230	315	Ø22	32	100
BK80-BK80Z	250	400	480	360	480	Ø33	47	120
BK90-BK90Z	295	400	480	360	480	Ø33	47	145

BK-series bevel-geared motors

Additional Dimension Sheet

Assembly tools for hollow shaft and keyway

Position 1 Shaft

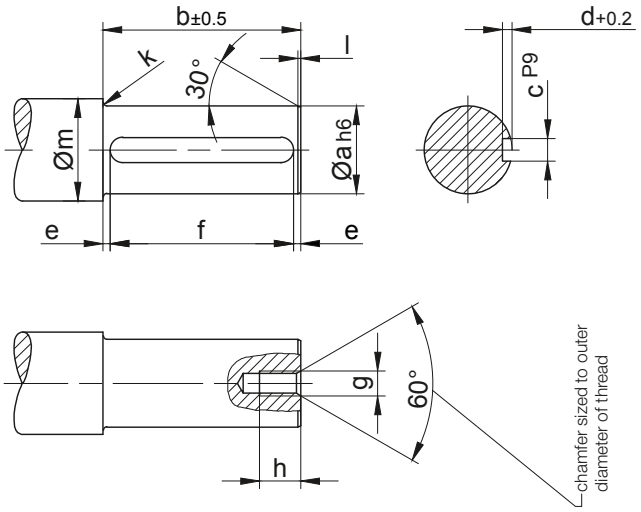

* Position 2 Disc

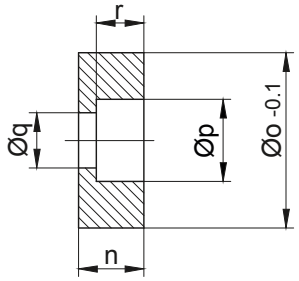

Material: Steel, tensile strength ≥ 470 N/mm²

Type	Dimensions (mm)															
	Postion 1 Shaft											Postion 2 Disc				
	a	b	c	d	e	f	g	h	k	l	m	n	o	p	q	r
BK06	20	75	6	3.5	6	$63^{+0.3}$	M8	16	2	1	28	13.5	19.8	11	6.6	6.5
BK10	25	148	8	4	11.5	$125^{+0.5}$	M8	18	2.5	1.5	33	13.5	24.8	15	9	8.5
BK20	30	170	8	4	15	$140^{+0.5}$	M10	20	3	1.5	38	15	29.8	18	11	10
BK30	35	201	10	5	10.5	$180^{+0.5}$	M10	20	3	1.5	43	16	34.8	18	11	10
BK40	40	235	12	5	17.5	$200^{+0.5}$	M12	22	3	2	48	18	39.8	20	13.5	12
BK50	50	254	14	5.5	17	$220^{+0.5}$	M16	30	3.5	2	58	21	49.8	26	17.5	15
BK60	60	273	18	7	11.5	$250^{+0.5}$	M20	38	3.5	2	68	24	59.8	33	22	18
BK70	80	316	22	9	18	$280^{+0.5}$	M20	38	4	2	90	27	79.8	33	22	20
BK70-K70	70	316	20	7.5	18	$280^{+0.5}$	M20	38	4	2	90	27	69.8	33	22	20
BK80	100	360	28	10	20	$320^{+0.5}$	M24	45	4	3	110	32	99.8	40	26	25
BK90	120	432	32	11	16	$400^{+0.5}$	M24	45	4.5	3	130	35	119.8	40	26	28

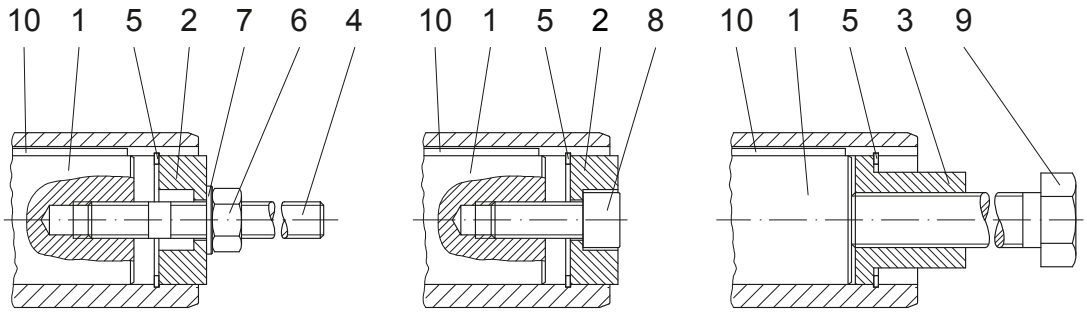

The parts shown are neccessary for assembly. ONLY * specified parts are enclosed in the assembly kit.
Suitable measures are to be used to secure Bolt Pos. 8 against loosening!

The actual gearbox design can vary from the geometry shown. Generate drive specific 3D and 2D geometries under www.BauerCat.com.

Assembly tools for hollow shaft and keyway

Position 3 Sleeve

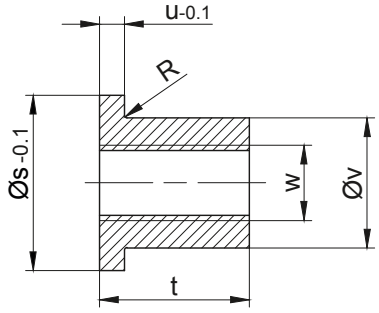

Material: Steel, tensile strength ≥ 470 N/mm²

* Position 4 Stud bolt

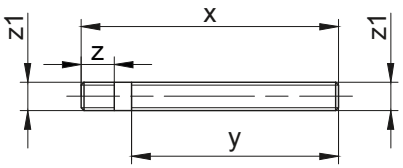

Material: Steel, tensile strength ≥ 1000 N/mm² Thread rolled

Type	Dimensions (mm)										* Retaining ring DIN 472	Hexagon nut DIN 394-8	Disc DIN 125-St	* Filister head screw DIN 912-8.8	Starting torque (Nm)	Hexagon bolt DIN EN 24017-8.8	Key DIN 6885 Width/Height/Length
	Position 3 Sleeve						Position 4 Stud bolt										
	s	t	u	v	w	R	x	y	z	z1	Pos.5	Pos.6	Pos.7	Pos.8		Pos.9	Pos.10
BK06	19.8	20	5	11.1	M8	0.8	130	100	20	M6	20x1	M6	6.4	M6x30	5	M6x120	A 6x6x63
BK10	24.8	24	5	15.4	M12	0.8	200	170	20	M8	25x1.2	M8	8.4	M8x30		M12x190	A 8x7x125
BK20	29.8	28	5	19.8	M14	0.8	230	195	23	M10	30x1.2	M10	10.5	M10x30	8	M14x210	A 8x7x140
BK30	34.8	28	5	23	M14	-	260	220	23	M10	35x1.5	M10	10.5	M10x35		M14x240	A 10x8x180
BK40	39.8	40	6	27.7	M20	0.8	300	260	28	M12	40x1.75	M12	13	M12x35	16	M20x290	A 12x8x200
BK50	49.8	48	6	36	M24	-	340	290	37	M16	50x2.0	M16	17	M16x40	30	M24x320	A 14x9x220
BK60	59.8	60	6	44	M30	-	370	310	45	M20	60x2.0	M20	21	M20x50	42	M30x350	A 18x11x250
BK70	79.8	60	8	55	M30	-	420	360	45	M20	80x2.5	M20	21	M20x50		M30x400	A 22x14x280
BK70-K70	69.8	60	8	53	M30	-	420	360	45	M20	70x2.5	M20	21	M20x50		M30x400	A 20x12x280
BK80	99.8	72	10	75	M36	-	480	410	55	M24	100x3.0	M24	25	M24x60	100	M36x450	A 28x16x320
BK90	119.8	72	10	80	M36	-	560	480	55	M24	120x4.0	M24	25	M24x60		M36x520	A 32x18x400

The parts shown are neccessary for assembly. ONLY * specified parts are enclosed in the assembly kit.
Suitable measures are to be used to secure Bolt Pos. 8 against loosening!

Optional

Type	Assembly tool „Holding“
BK06	Id.Nr.4104013
BK10	Id.Nr.4103921
BK20	Id.Nr.4103939
BK30	Id.Nr.4103947
BK40	Id.Nr.4103955
BK50	Id.Nr.4103963
BK60	Id.Nr.4103971
BK70	Id.Nr.4103980
BK70-K70	Id.Nr.4104765
BK80	Id.Nr.4103998
BK90	Id.Nr.4104005

The actual gearbox design can vary from the geometry shown. Generate drive specific 3D and 2D geometries under www.BauerCat.com.

BK-series bevel-geared motors

Additional Dimension Sheet

Assembly tools for splined shaft

Position 1 Shaft

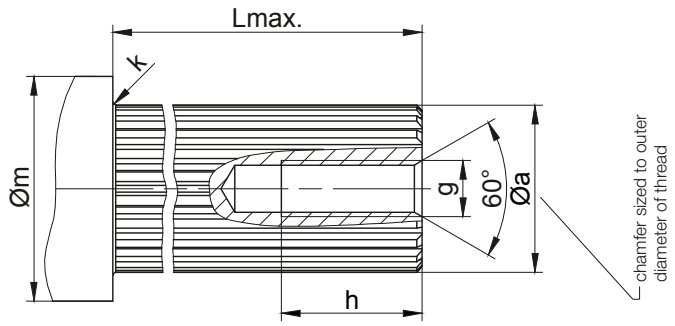

* Position 2 Disc

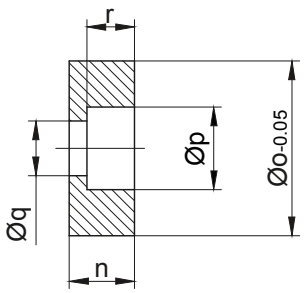

Material: Steel, tensile strength ≥ 470 N/mm²

Type	Dimensions (mm)										
	Postion 1 Shaft						Postion 2 Disc				
	a	g	h	g	Lmax.	m	n	o	p	q	r
BK10	DIN 5480-W30x1.25x22	M10	25	2.5	145	42	15	34.9	18	11	10
BK20	DIN 5480-W35x2x16	M10	25	3	167	44	14	35.9	18	11	10
BK30	DIN 5480-W40x2x18	M12	30	3	200	49	18	40.9	20	13.5	12
BK40	DIN 5480-W50x2x24	M16	35	3	235	59	17.5	50.9	26	17.5	12.5
BK50	DIN 5480-W60x2x28	M20	40	3.5	255	69	24	60.9	33	22	18
BK60	DIN 5480-W70x2x34	M20	40	3.5	275	80	24	71.9	33	22	18
BK70	DIN 5480-W85x3x27	M20	40	4	323	96	22	85.9	33	22	16
BK80	DIN 5480-W110x3x35	M24	50	4	360	122	32	111.9	40	26	25
BK90	DIN 5480-W130x5x24	M24	50	4.5	440	143	25	131.4	40	26	18

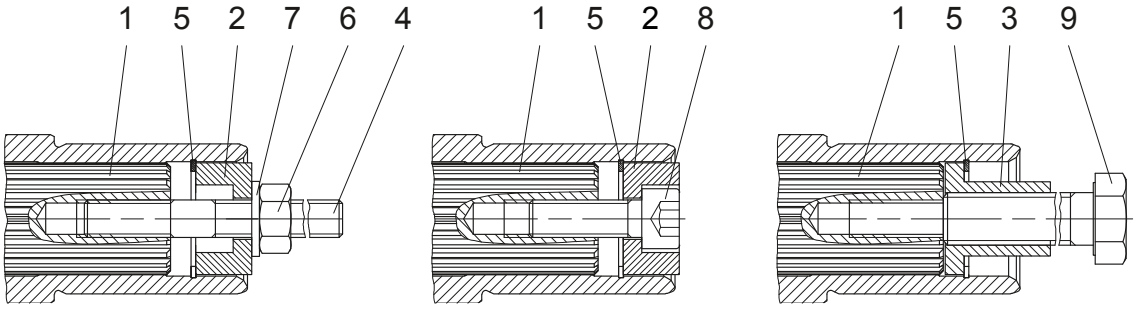

Installation Holding Dismantlement

The parts shown are neccessary for assembly. ONLY * specified parts are enclosed in the assembly kit.
Suitable measures are to be used to secure Bolt Pos. 8 against loosening!

The actual gearbox design can vary from the geometry shown. Generate drive specific 3D and 2D geometries under www.BauerCat.com.

Assembly tools for splined shaft

Position 3 Sleeve

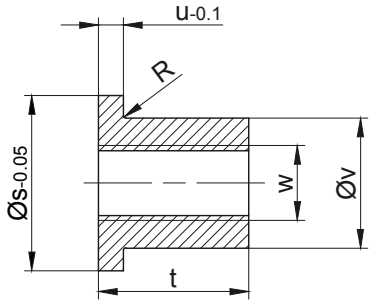

Material: Steel, tensile strength ≥ 470 N/mm²

Position 4 Stud bolt

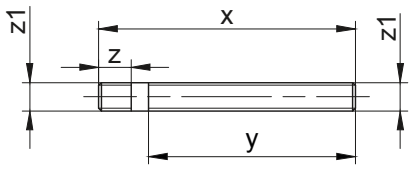

Material: Steel, tensile strength ≥ 1000 N/mm² Thread rolled

Type	Dimensions (mm)										* Retaining ring DIN 472	Hexagon nut DIN 394-8	Disc DIN 125-St	* Filister head screw DIN 912-8.8	Tightening torques (Nm)	Hexagon bolt DIN EN 24017-8.8
	Position 3 Sleeve						Position 4 Stud bolt									
	s	t	u	v	w	R	x	y	z	z1	Pos.5	Pos.6	Pos.7	Pos.8		Pos.9
BK10	30.4	28	5	19.8	M14	-	200	170	23	M10	35x1.5	M10	10.5	M10x30	8	M14x190
BK20	35.9	28	5	23	M14	-	230	195	23	M10	35x1.5	M10	10.5	M10x35		M14x210
BK30	40.9	40	6	27.7	M20	-	260	220	28	M12	40x1.75	M12	13	M12x35	16	M20x240
BK40	50.9	48	6	36	M24	0.8	300	260	37	M16	50x2.0	M16	17	M16x40	30	M24x290
BK50	60.9	60	6	44	M30	-	340	290	45	M20	60x2.0	M20	21	M20x50	42	M30x320
BK60	71.9	60	6	53	M30	0.8	370	310	45	M20	72x2.5	M20	21	M20x50		M30x350
BK70	85.9	60	8	65	M30	0.8	420	360	45	M20	85x3	M20	21	M20x50		M30x400
BK80	111.9	72	10	85	M36	0.8	480	410	55	M24	112x4	M24	25	M24x60	100	M36x450
BK90	131.4	72	10	95	M36	0.8	560	480	55	M24	130x4	M24	25	M24x60		M36x520

The parts shown are neccessary for assembly. ONLY * specified parts are enclosed in the assembly kit.
Suitable measures are to be used to secure Bolt Pos. 8 against loosening!

Optional

Type	Assembly tool „Holding“
BK10	Id.Nr. 4105133
BK20	Id.Nr. 4105141
BK30	Id.Nr. 4105150
BK40	Id.Nr. 4105168
BK50	Id.Nr. 4105176
BK60	Id.Nr. 4105184
BK70	Id.Nr. 4105192
BK80	Id.Nr. 4105206
BK90	Id.Nr. 4105214

Shaft Cap (VK)

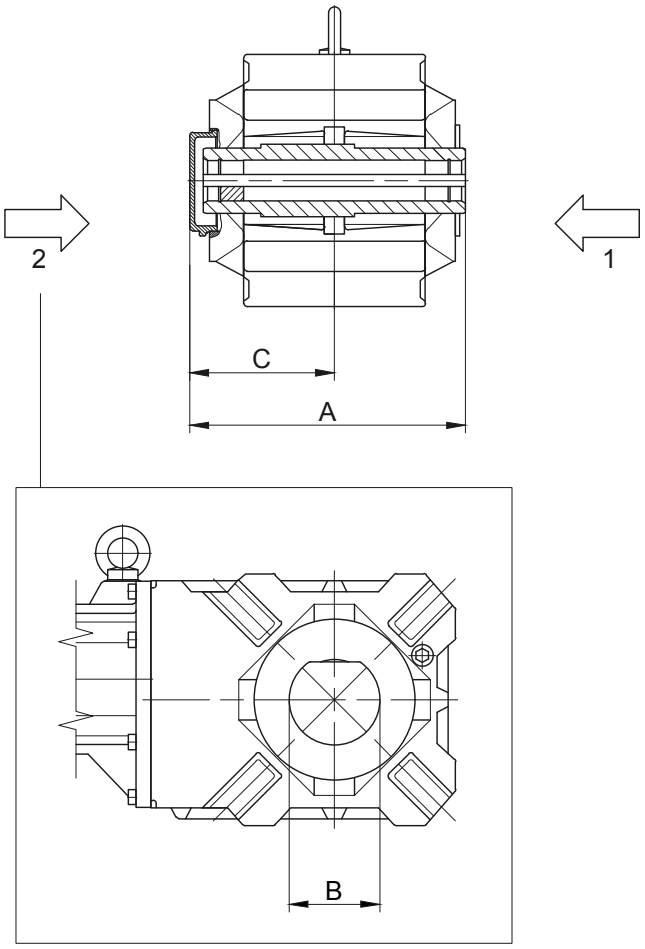

1 Gear side FRONT (V)
2 Gear side REAR (H)

Type	A	B	C
BK10	182.5	85	97.5
BK20	204.5	90	108.5
BK40	273.5	100	143.5
BK50	298	115	157
BK60	322	130	171
BK70	370	160	194
Dimensions in millimetres (mm)			

The actual gearbox design can vary from the geometry shown. Generate drive specific 3D and 2D geometries under www.BauerCat.com.

Shaft Cover (VD)

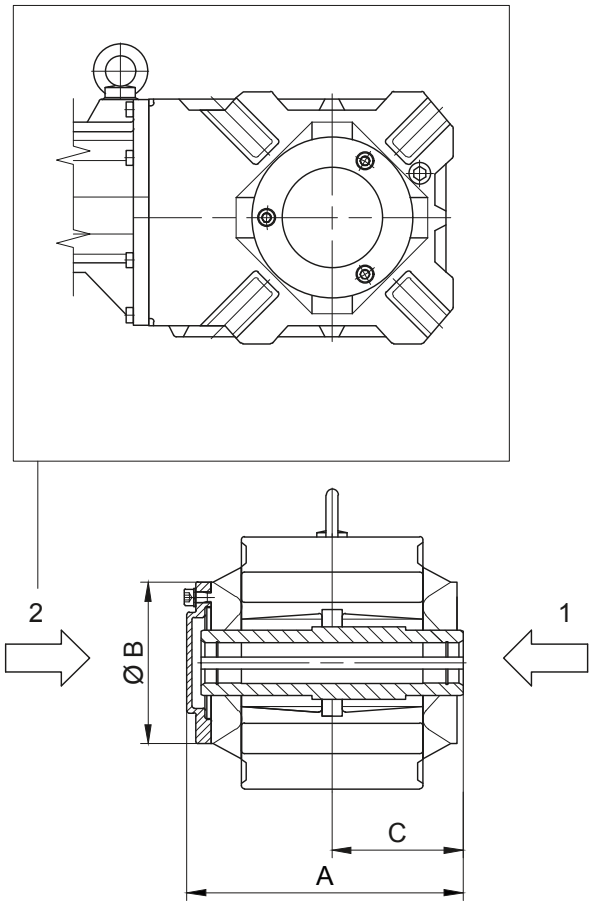

1 Gear side FRONT (V)
2 Gear side REAR (H)

Type	A	B	C
BK10	181	120	85
BK20	206	139.5	96
BK30	239	160	112
BK40	274	160	130
BK50	297	199	141
BK60	321	210	151
BK70	368	250	176
BK80	419	300	202
BK90	492	351	242
Dimensions in millimetres (mm)			

The actual gearbox design can vary from the geometry shown. Generate drive specific 3D and 2D geometries under www.BauerCat.com.

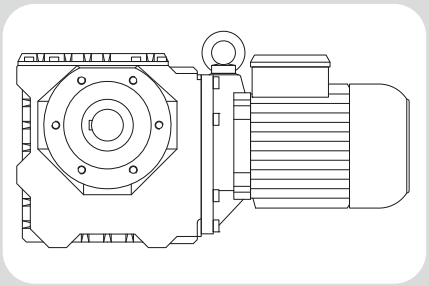

13

BS-series worm-geared motors - Dimensions

Dimension - Standard **642**
BS02 642
BS03 644
BS04 646
BS06 648
BS10-BS10Z 650
BS20-BS20Z 652
BS30-BS30Z 654
BS40-BS40Z 656
Dimension - Tandem Gearbox **658**
BS06G04 658
BS10G06 660
BS20G06 662
BS30G06 664
BS40G10 666
Additional Dimension Sheet **668**
Shrink disc couplings (SSV) 668
Shrink disc couplings with (SSV) cover 669
Rubber buffer for torque restraint 670
Position of the torque arm 671
Threaded foot 672
Foot plate, left 673
Assembly tools for hollow shaft and keyway 674
Shaft Cap (VK) 676
Shaft Cover (VD) 677

BS-series worm-geared motors

Dimension - Standard

BS02

Flange with clearance holes at front

Code -3.V/

(Code -4.V/)

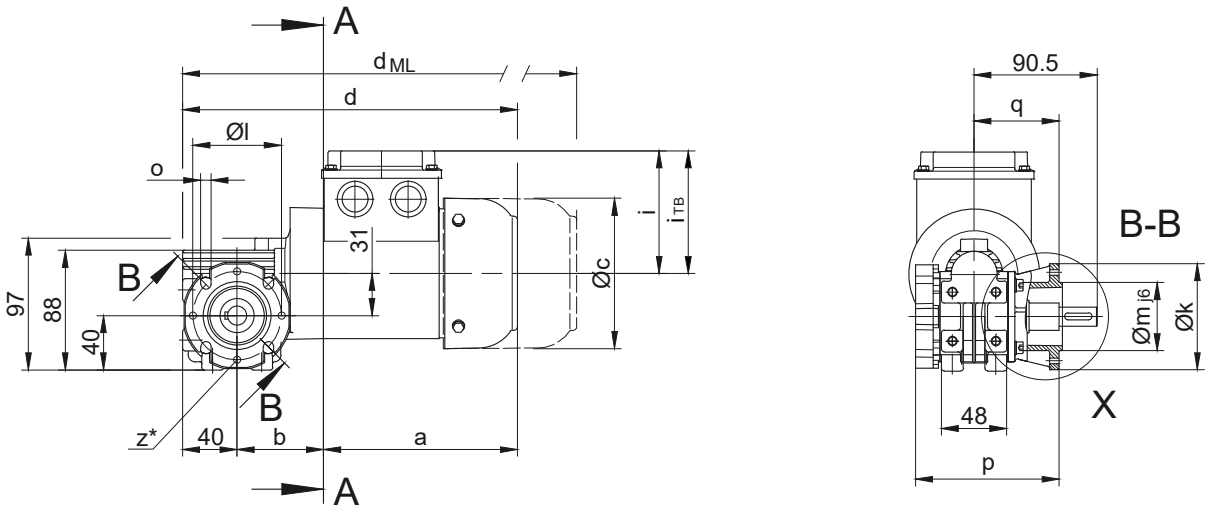

Code -.3/

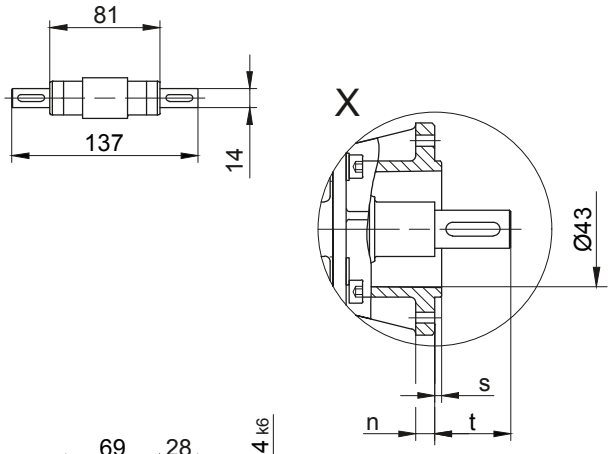

Code -.7/

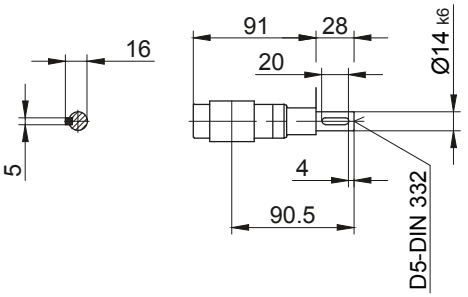

Code -.1/

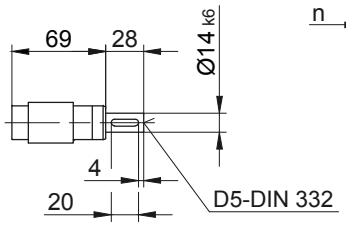

Code -.4/

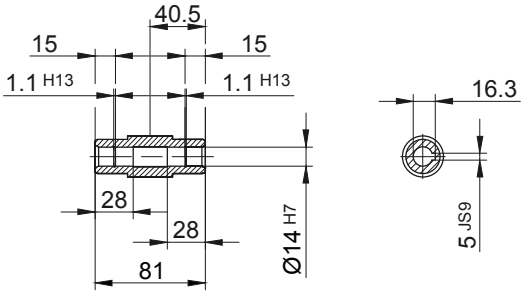

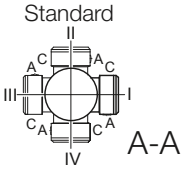

* optional 4xM5 for code -3.
* optional 4xM6 for code -4.

Flange Dimensions										
Type	Design	k	l	m	n	o	p	q	s	t
BS02	Code -3.V/	80	65	50	7.5	5.5	105.5	62.5	2.5	28
BS02	Code -4.V/	110	80	60	8	6.6	105.5	62.5	2.5	28
Dimensions in millimetres (mm										

Type	a	b	c	d	i	Design with motor extensions				
						i_{TB}	Brake	Encoder	Brake with Encoder	Back Stop
							d_{ML}	d_{ML}	d_{ML}	d_{ML}
BS02-../D04.A.	142.5	63.5	110.5	246	90	112	289.5	333.5	377	-
BS02-../D..05.A.	170.5	65.5	123	276	101.5	117	318	378.5	416	-
BS02-../D..06.A.	170.5	65.5	123	276	101.5	119	318	378.5	416	-
BS02-../D..07.A.	190.5	65.5	123	296	101.5	119	338	398.5	436	-
Dimensions in millimetres (mm)										

The actual gearbox design can vary from the geometry shown. Generate drive specific 3D and 2D geometries under www.BauerCat.com.

BS02

Torque arm at front
Code -5.V/

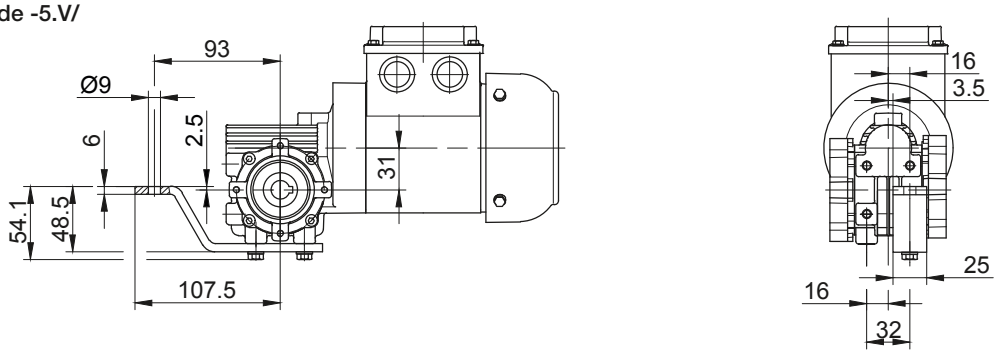

Flange with tapped holes at front
Code -7.V/

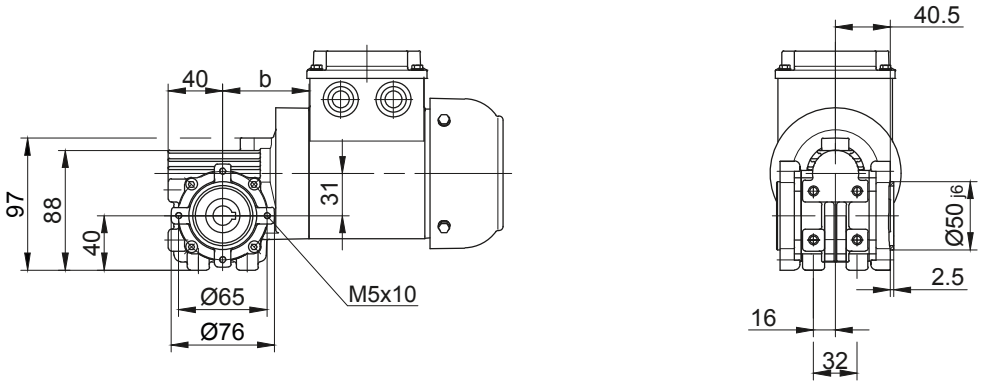

Foot with tapped holes at bottom
Code -6.U/

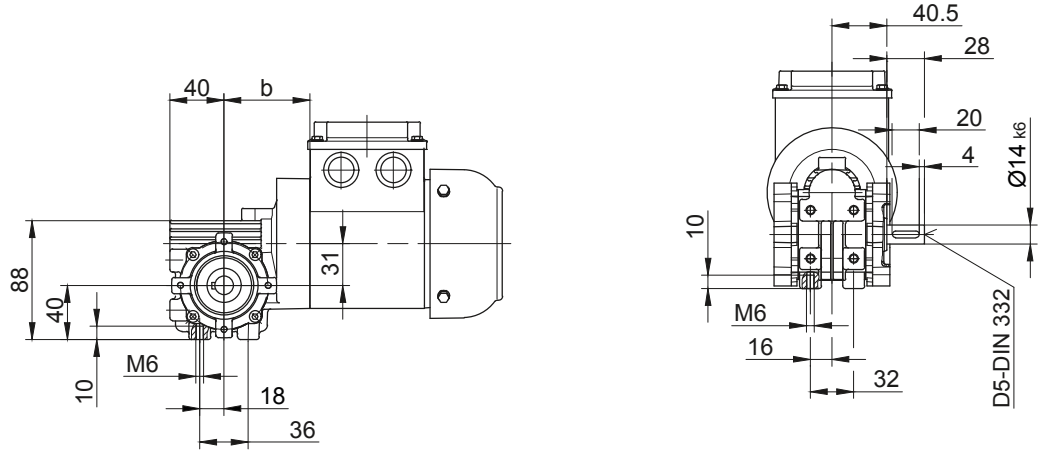

Foot with clearance holes at bottom
Code -1.U/

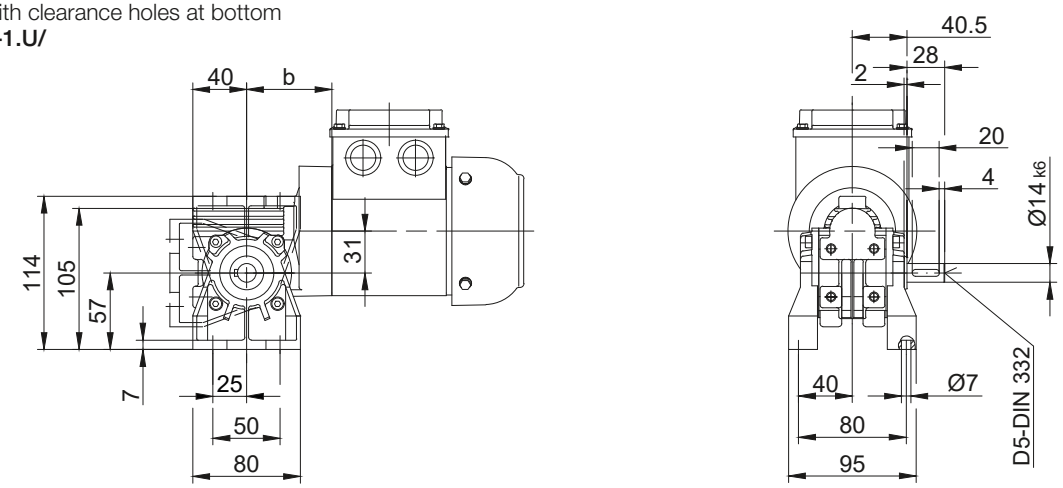

13

BS-series worm-geared motors

Dimension - Standard

BS03

Flange with clearance holes at front

Code -3.V/

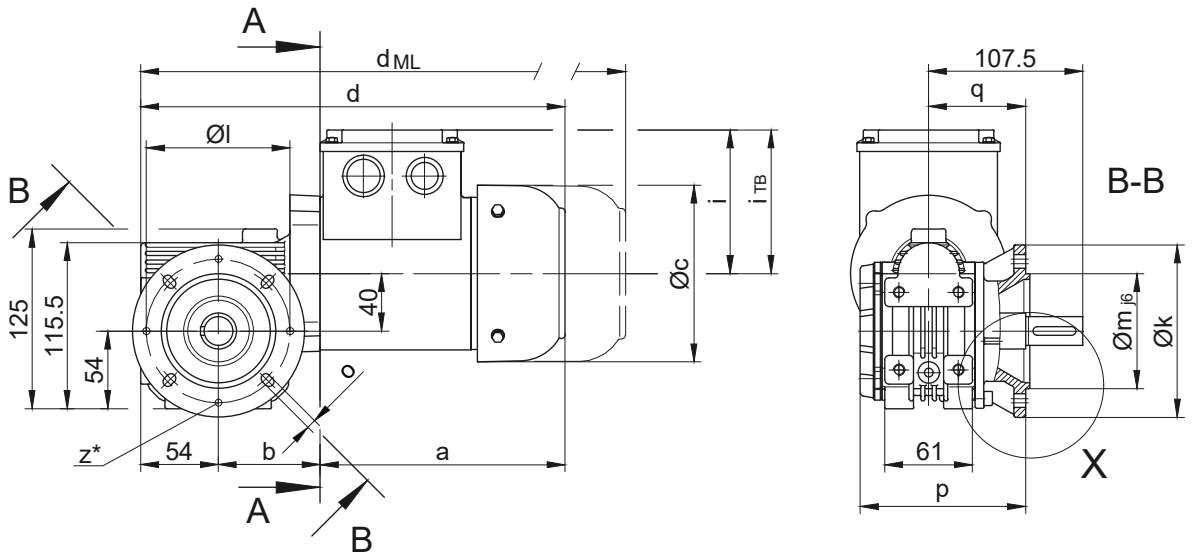

Code -.3/

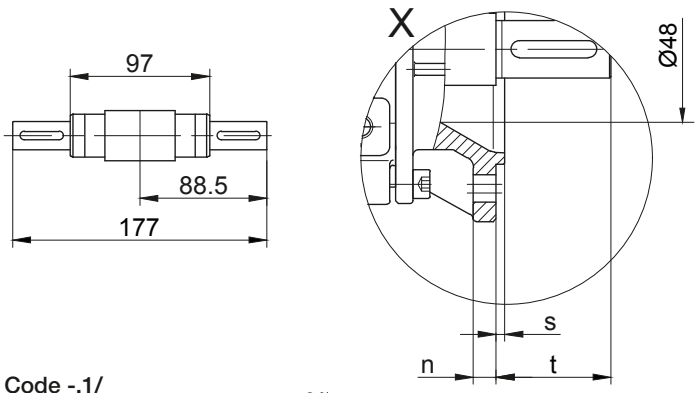

Code -.7/

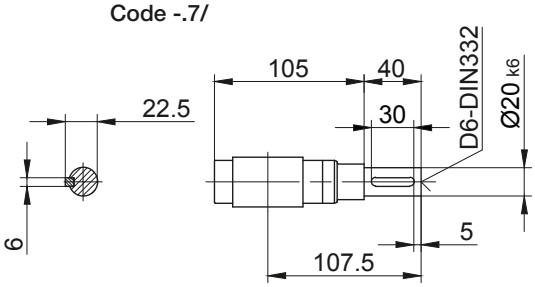

Code -.1/

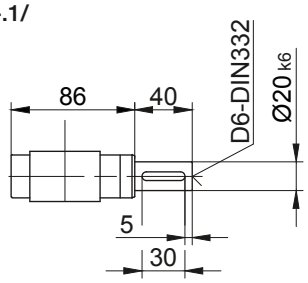

Code -.4/

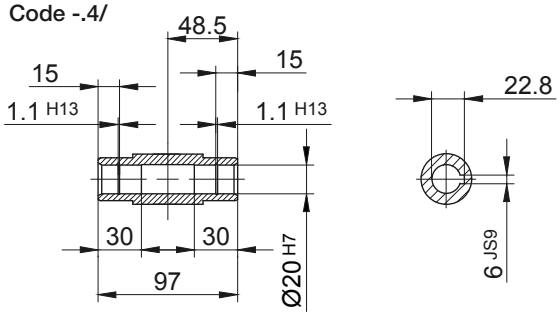

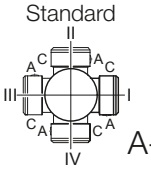

* optional 4xM6 for code -3.

Flange Dimensions										
Type	Design	k	l	m	n	o	p	q	s	t
BS03	Code -3.V/	120	100	80	8	6.6	115	67.5	3	40
Dimensions in millimetres (mm										

Type	a	b	c	d	i	Design with motor extensions				
						i_{TB}	Brake	Encoder	Brake with Encoder	Back Stop
							d_{ML}	d_{ML}	d_{ML}	d_{ML}
BS03-../D..05.A.	170.5	71	123	295.5	101.5	117	337.5	398	435.5	-
BS03-../D..06.A.	170.5	71	123	295.5	101.5	119	337.5	398	435.5	-
BS03-../D..07.A.	190.5	71	123	315.5	101.5	119	357.5	418	455.5	-
BS03-../D..08.A.	199.5	115	156	368.5	116	136.5	434.5	480.5	542	434.5
BS03-../D..08.B.	229.5	115	156	398.5	116	136.5	464.5	510.5	571.5	464.5
Dimensions in millimetres (mm)										

The actual gearbox design can vary from the geometry shown. Generate drive specific 3D and 2D geometries under www.BauerCat.com.

BS03

Torque arm at front
Code -5.V/

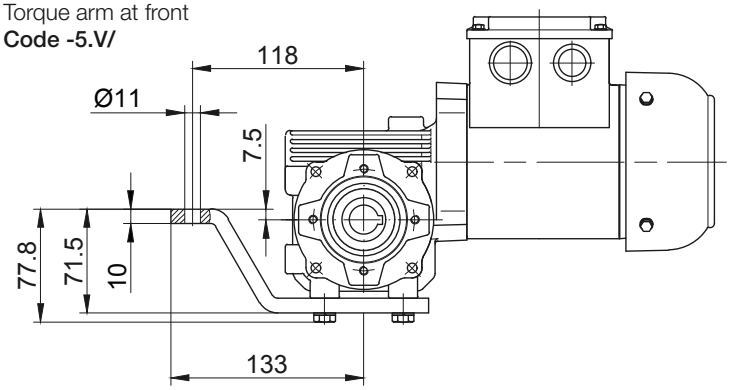

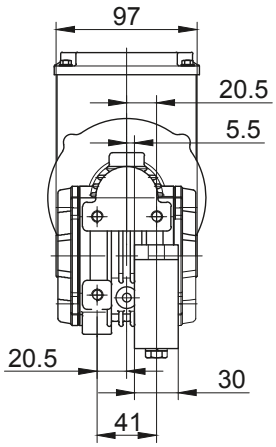

Flange with tapped holes at front
Code -7.V/

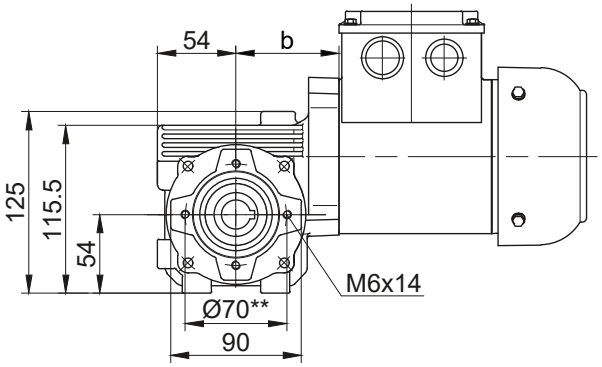

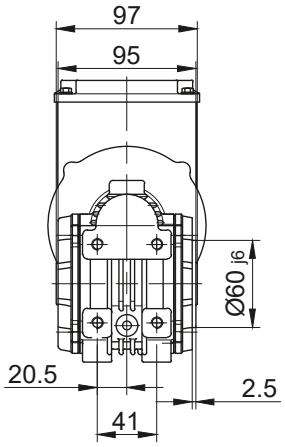

Foot with tapped holes at bottom
Code -6.U/

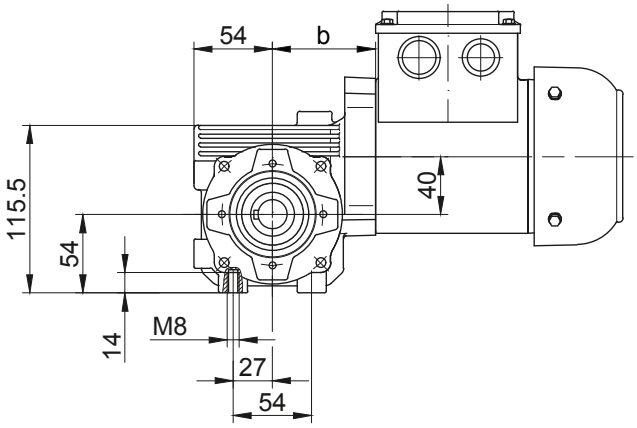

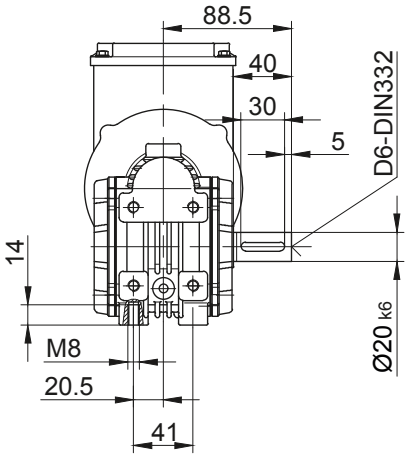

Foot with clearance holes at bottom
Code -1.U/

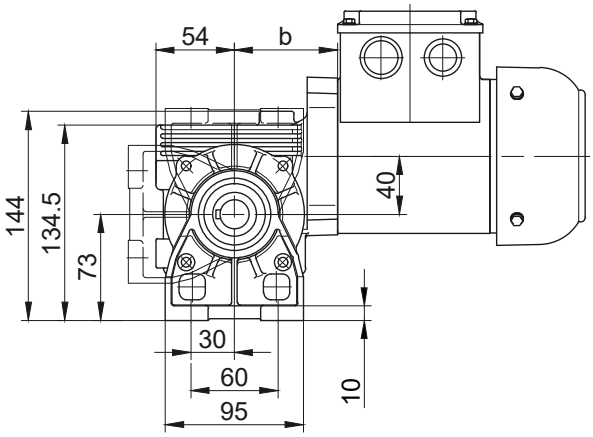

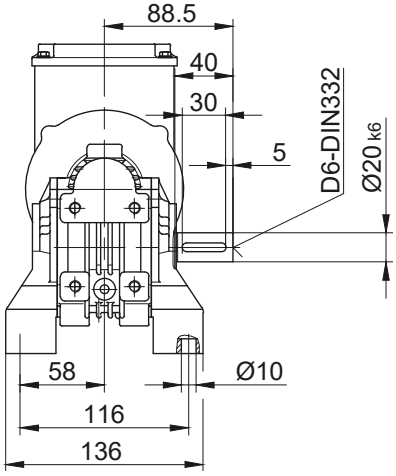

** not for D..08.. with PTO shaft (code -.1, -.2, -3., -.7, -.8, -.9)

The actual gearbox design can vary from the geometry shown. Generate drive specific 3D and 2D geometries under www.BauerCat.com.

BS-series worm-geared motors

Dimension - Standard

BS04

Flange with clearance holes at front

Code -3.V/

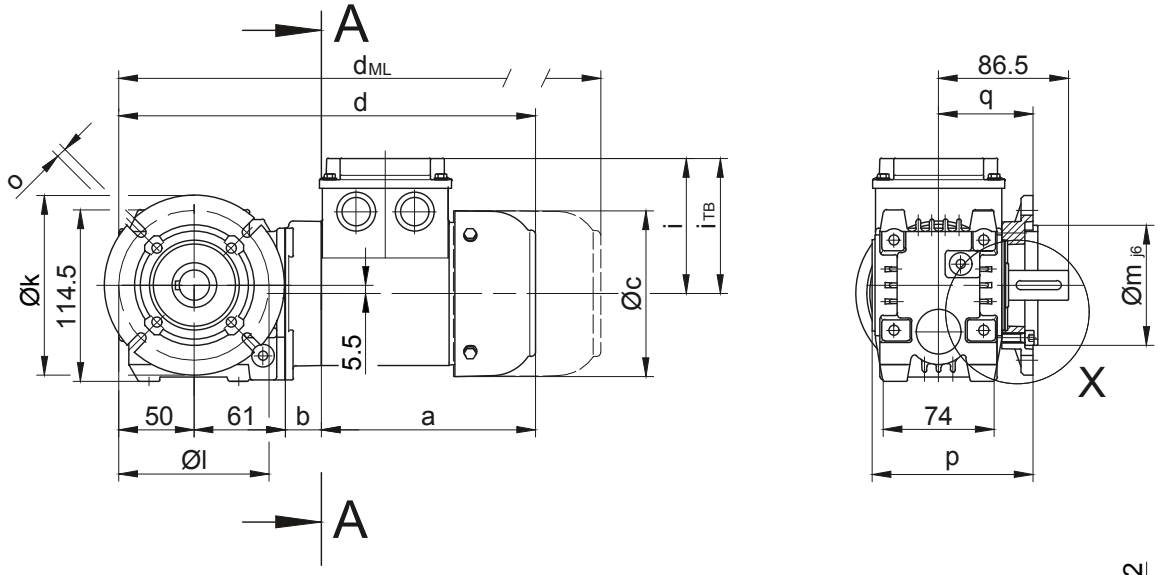

Code -.4/

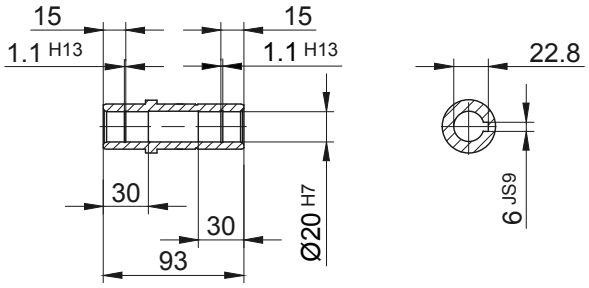

Code -.1/

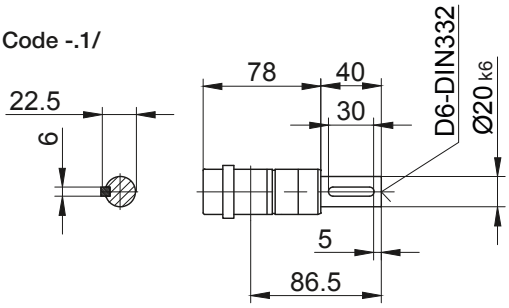

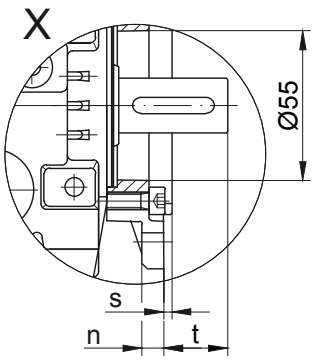

Code -.3/

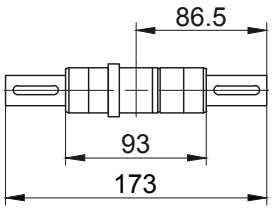

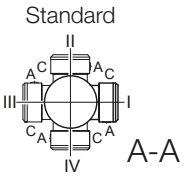

Flange Dimensions										
Type	Design	k	l	m	n	o	p	q	s	t
BS04	Code -3.V/	120	100	80	8	6.6	107.5	63	3	23.5
Dimensions in millimetres (mm										

Type	a	b	c	d	i	Design with motor extensions				
						i_{TB}	Brake	Encoder	Brake with Encoder	Back Stop
							d_{ML}	d_{ML}	d_{ML}	d_{ML}
BS04-../D04.A.	142.5	24	110.5	277.5	90	112	321	365	408.5	-
BS04-../D..05.A.	170.5	26	123	307.5	101.5	117	349.5	410	447.5	-
BS04-../D..06.A.	170.5	26	123	307.5	101.5	119	349.5	410	447.5	-
BS04-../D..07.A.	190.5	26	123	327.5	101.5	119	369.5	430	467.5	-
Dimensions in millimetres (mm)										

The actual gearbox design can vary from the geometry shown. Generate drive specific 3D and 2D geometries under www.BauerCat.com.

BS04

Torque arm at front
Code -5.V/

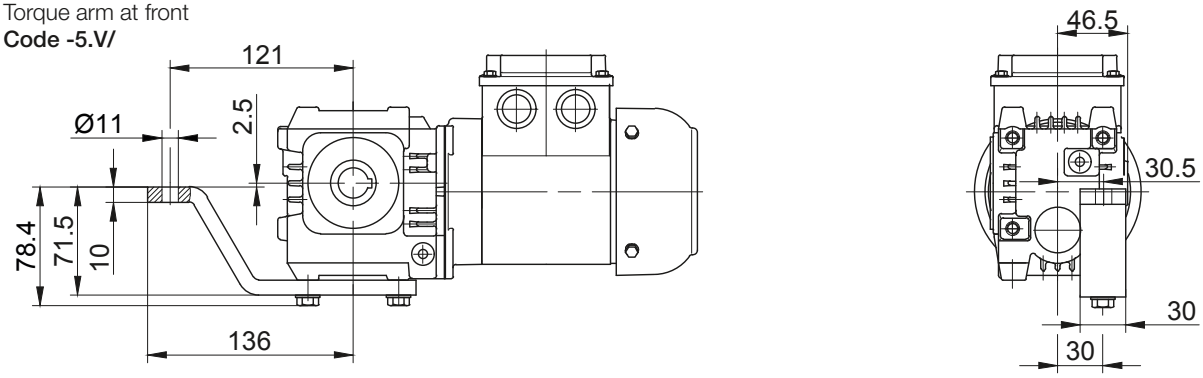

Flange with tapped holes holes at front
Code -7.V/

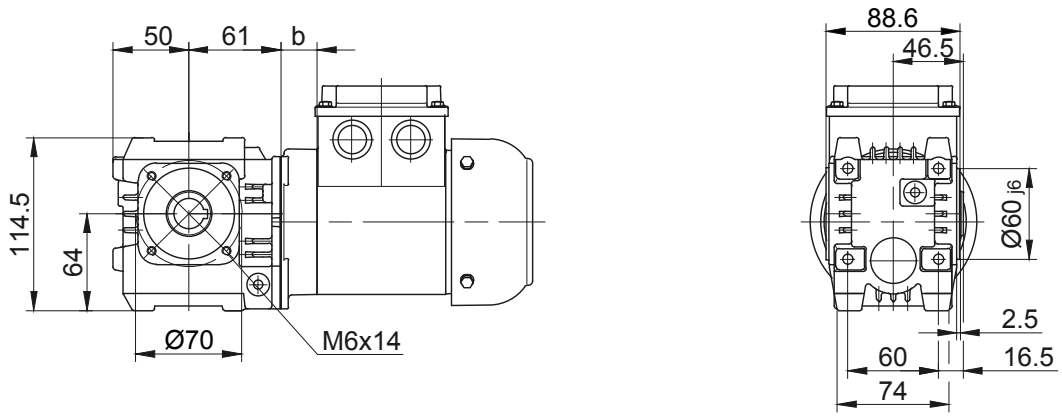

Foot with tapped holes at bottom
Code -6.U/

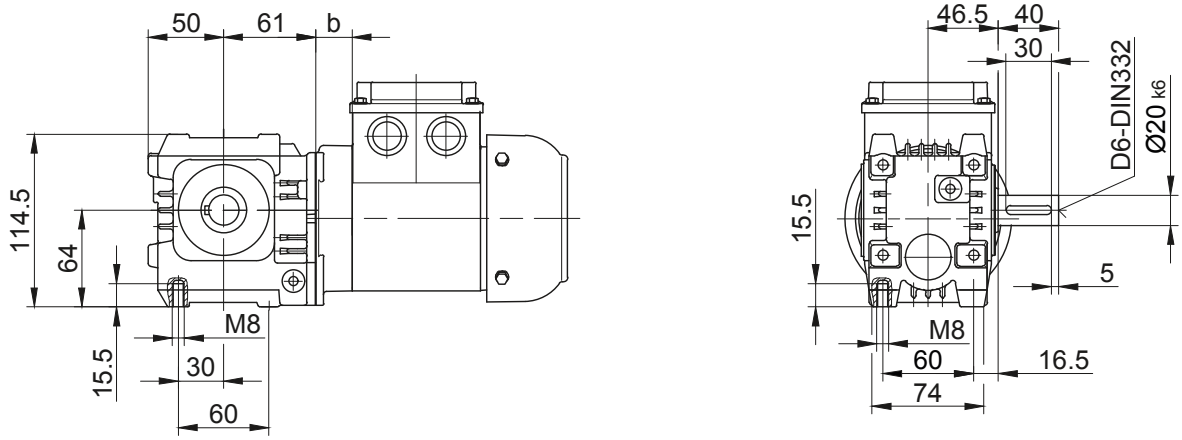

Foot with clearance holes at bottom
Code -1.U/

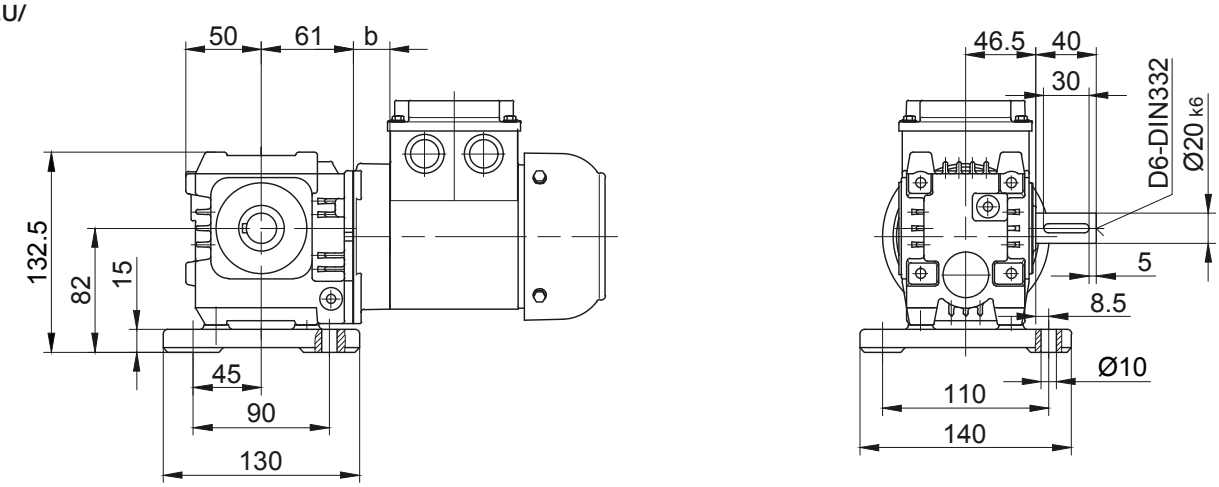

The actual gearbox design can vary from the geometry shown. Generate drive specific 3D and 2D geometries under www.BauerCat.com.

BS-series worm-geared motors

Dimension - Standard

BS06

Flange with clearance holes at front

Code -3.V/
(Code -4.V/)

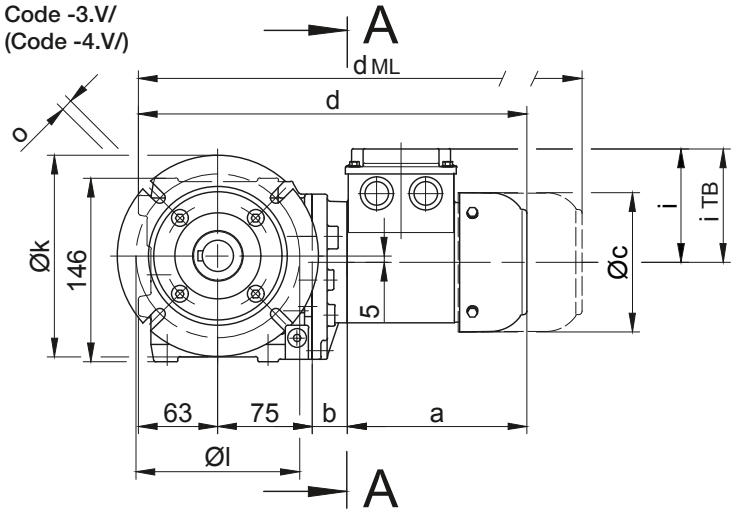

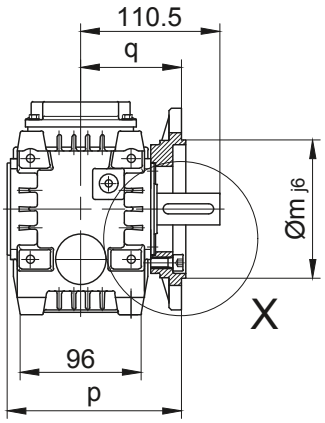

Code -.4/
Standard

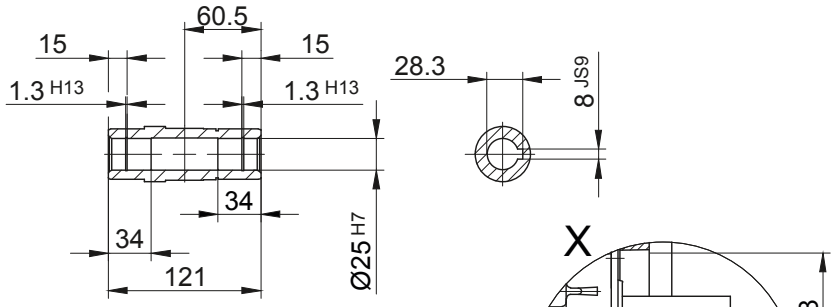

Code -.1/

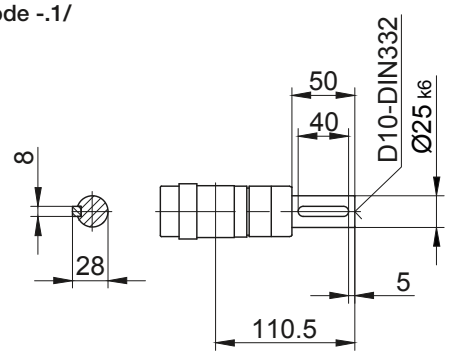

Code -.4/K20

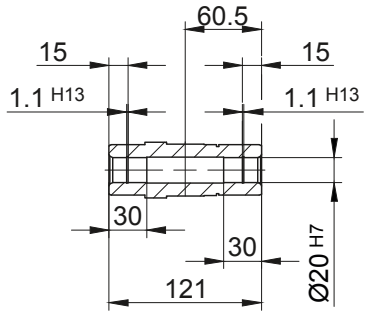

Code -.3/

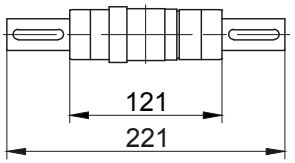

Standard

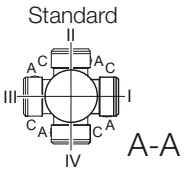

Flange Dimensions										
Type	Design	k	l	m	n	o	p	q	s	t
BS06..	Code -3.V/	140	115	95	10	9	138.3	80	3	30.5
BS06..	Code -4.V/	160	130	110	10	9	138.3	80	3.5	30.5
Dimensions in millimetres (mm										

Type	a	b	c	d	i	Design with motor extensions				
						i_{TB}	Brake	Encoder	Brake with Encoder	Back Stop
							d_{ML}	d_{ML}	d_{ML}	d_{ML}
BS06-../D04.A.	142.5	28	110.5	308.5	90	112	352	396	439.5	-
BS06-../D..05.A.	170.5	30	123	338.5	101.5	117	380.5	441	478.5	-
BS06-../D..06.A.	170.5	30	123	338.5	101.5	119	380.5	441	478.5	-
BS06-../D..07.A.	190.5	30	123	358.5	101.5	119	400.5	461	498.5	-
BS06-../D..08.A.	199.5	74	156	411.5	116	136.5	477.5	523.5	585	477.5
BS06-../D..08.B.	229.5	74	156	441.5	116	136.5	507.5	553.5	614.5	507.5
Dimensions in millimetres (mm)										

The actual gearbox design can vary from the geometry shown. Generate drive specific 3D and 2D geometries under www.BauerCat.com.

BS06

Torque arm at front
Code -5.V/

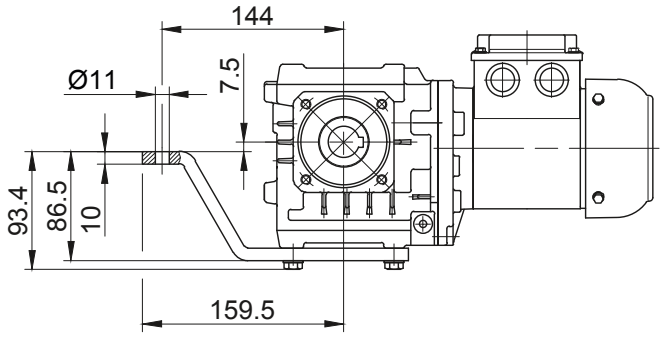

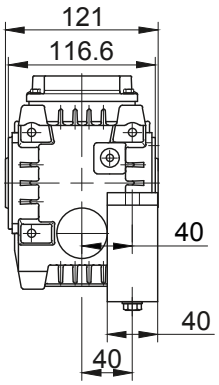

Flange with tapped holes at front
Code -7.V/

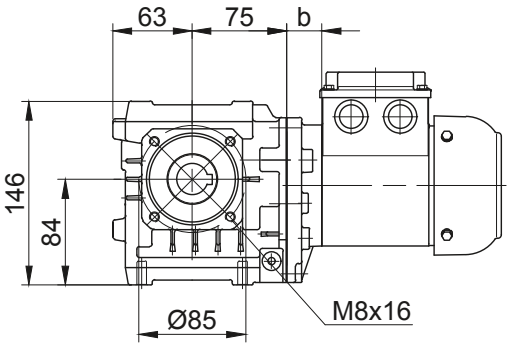

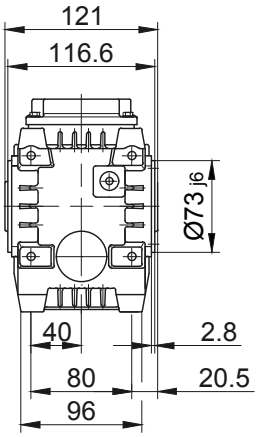

Foot with tapped holes at bottom
Code -6.U/

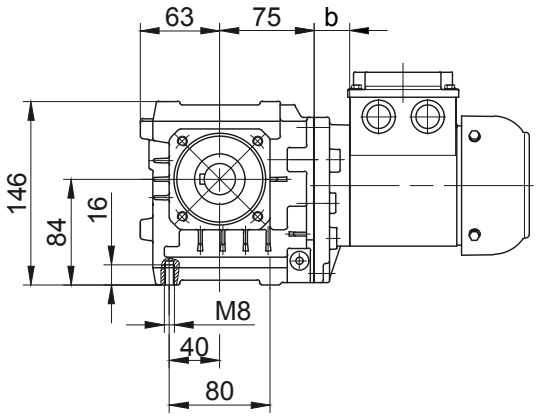

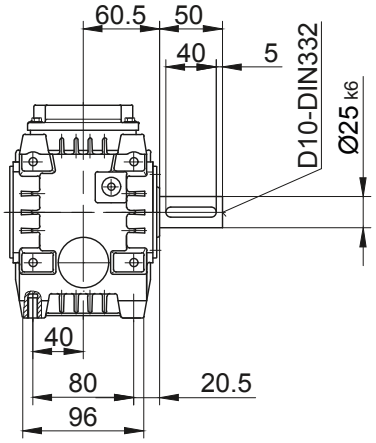

Foot with clearance holes at bottom
Code -1.U/

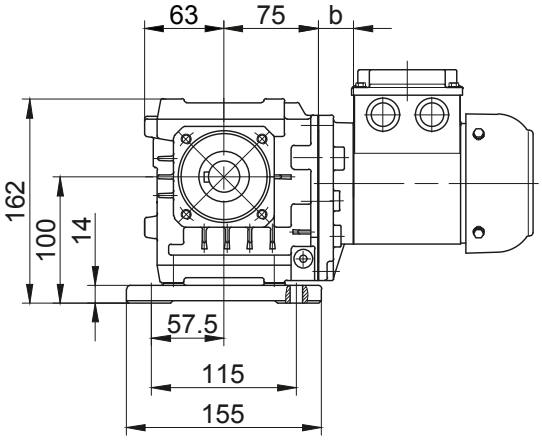

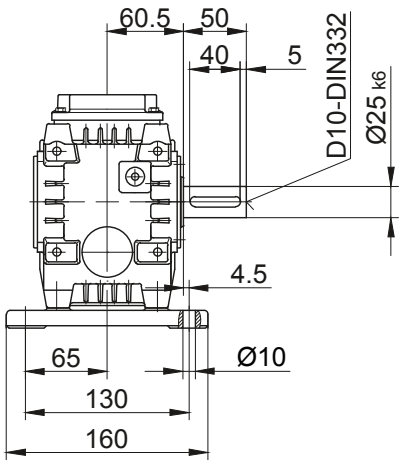

13

BS-series worm-geared motors

Dimension - Standard

BS10-BS10Z

Flange with clearance holes at front
Code -3.V/
(Code -2.V/)

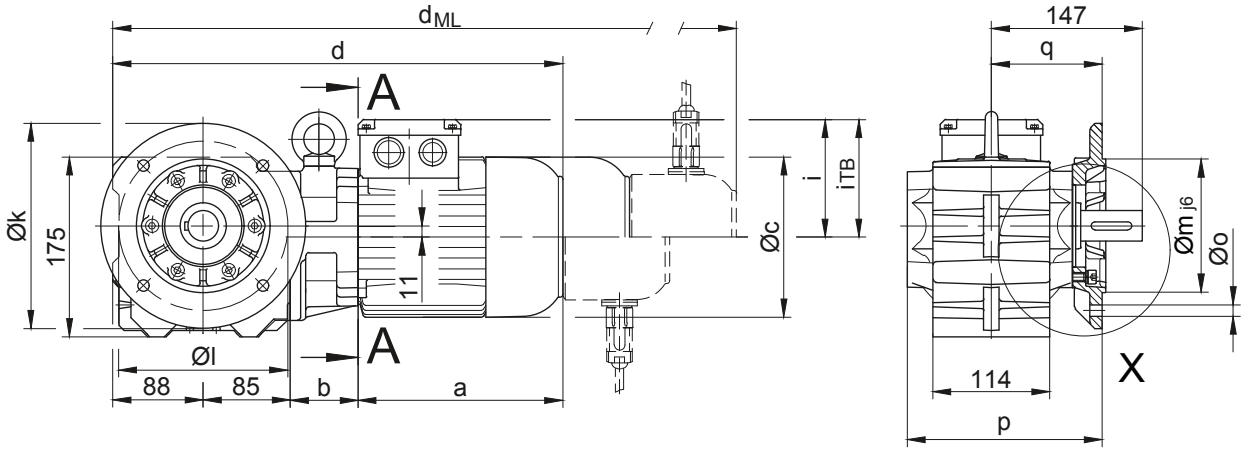

Code -.4/

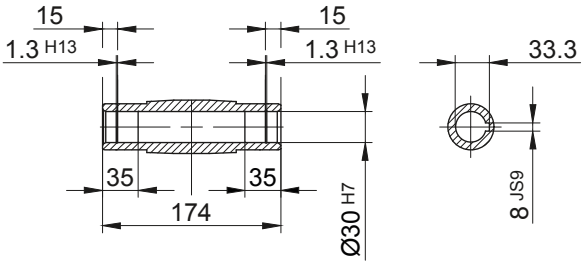

Code -.1/

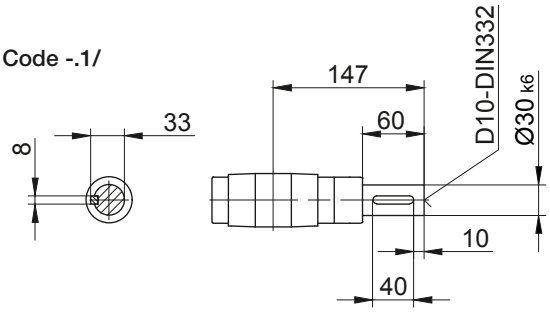

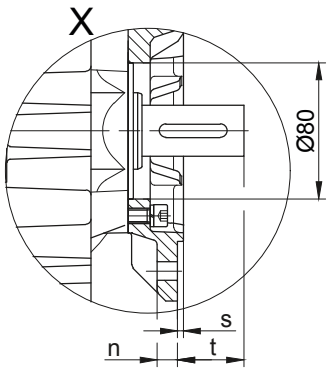

Code -.5/

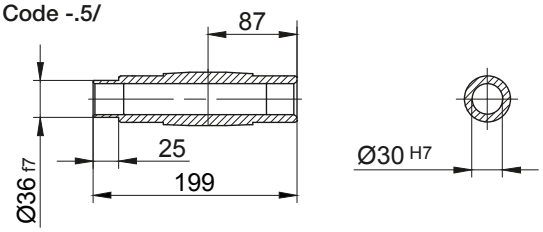

Code -.3/

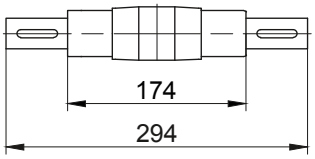

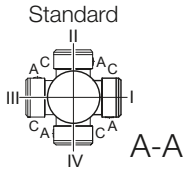

Flange Dimensions										
Type	Design	k	l	m	n	o	p	q	s	t
BS10..	Code -3.V/	200	165	130	12	11	190	108	3.5	39
BS10..	Code -2.V/	160	130	110	10	9	183	101	3.5	46
Dimensions in millimetres (mm										

Type	a	b	c	d	i	Design with motor extensions				
						i_{TB}	Brake	Encoder	Brake with Encoder	Back Stop
							d_{ML}	d_{ML}	d_{ML}	d_{ML}
BS10Z-../D04.A.	142.5	86	110.5	401.5	90	112	445	489	532.5	-
BS10-../D..05.A.	170.5	62	123	405.5	101.5	117	447.5	508	545.5	-
BS10Z-../D..05.A.	170.5	88	123	431.5	101.5	117	473.5	534	571.5	-
BS10-../D..06.A.	170.5	62	123	405.5	101.5	119	447.5	508	545.5	-
BS10Z-../D..06.A.	170.5	88	123	431.5	101.5	119	473.5	534	571.5	-
BS10-../D..07.A.	190.5	62	123	425.5	101.5	119	467.5	528	565.5	-
BS10Z-../D..07.A.	190.5	88	123	451.5	101.5	119	493.5	554	591.5	-
BS10-../D..08.A.	199.5	66	156	438.5	116	136.5	504.5	550.5	612	504.5
BS10Z-../D..08.A.	199.5	132	156	504.5	116	136.5	570.5	616.5	678	570.5
BS10-../D..08.B.	229.5	66	156	468.5	116	136.5	534.5	580.5	641.5	534.5
BS10Z-../D..08.B.	229.5	132	156	534.5	116	136.5	600.5	646.5	707.5	600.5
BS10-../D..09.A.	250.5	80.5	176	504	125.5	157	597	611.5	701	597
BS10-../D..09.B.	308.5	80.5	176	562	125.5	157	655	669	759	655
Dimensions in millimetres (mm)										

The actual gearbox design can vary from the geometry shown. Generate drive specific 3D and 2D geometries under www.BauerCat.com.

BS10-BS10Z

Torque arm at front

Code -5.V/

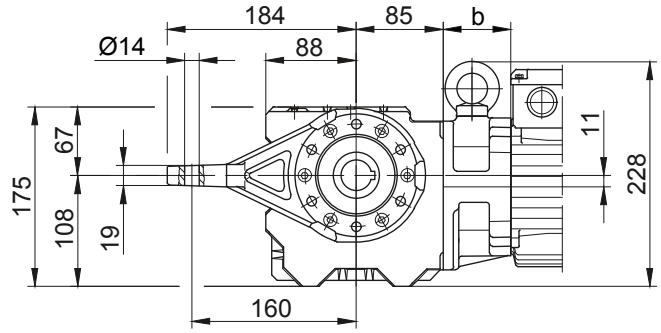

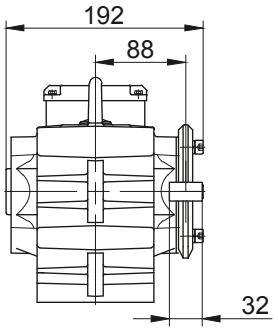

Flange with tapped holes at front

Code -7.V/

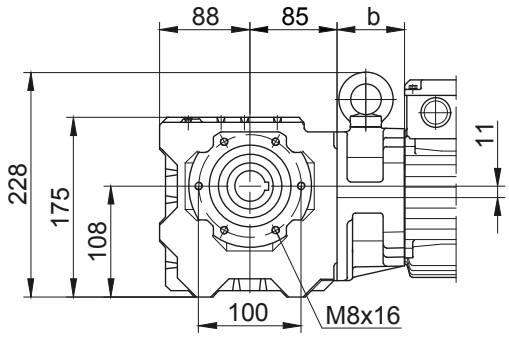

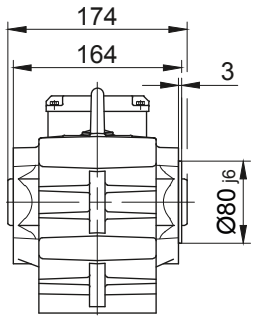

Foot with tapped holes at bottom

Code -6.U/

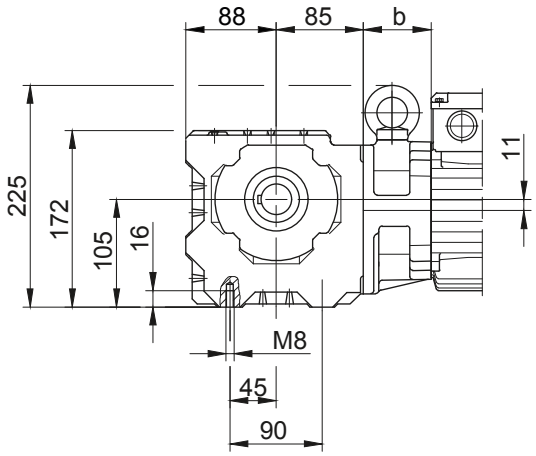

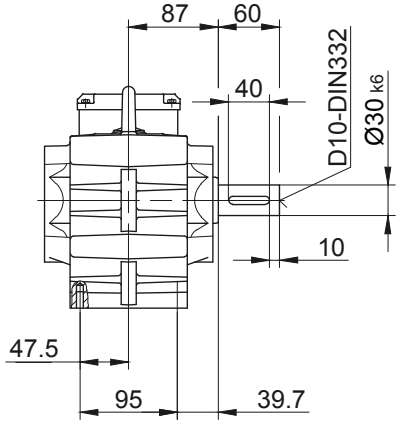

Foot with clearance holes at bottom

Code -1.U/

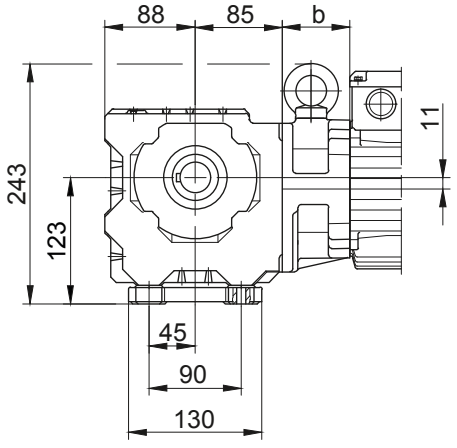

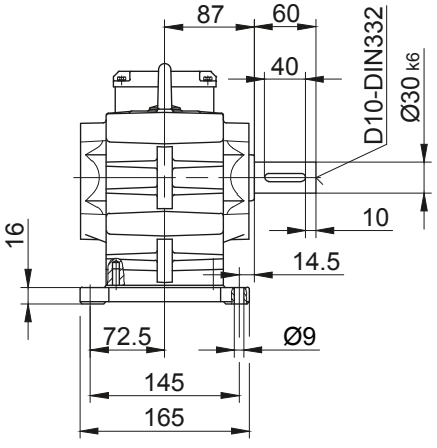

BS-series worm-geared motors

Dimension - Standard

BS20-BS20Z

Flange with clearance holes at front

Code -3.V/
(Code -2.V/)
(Code -4.V/)

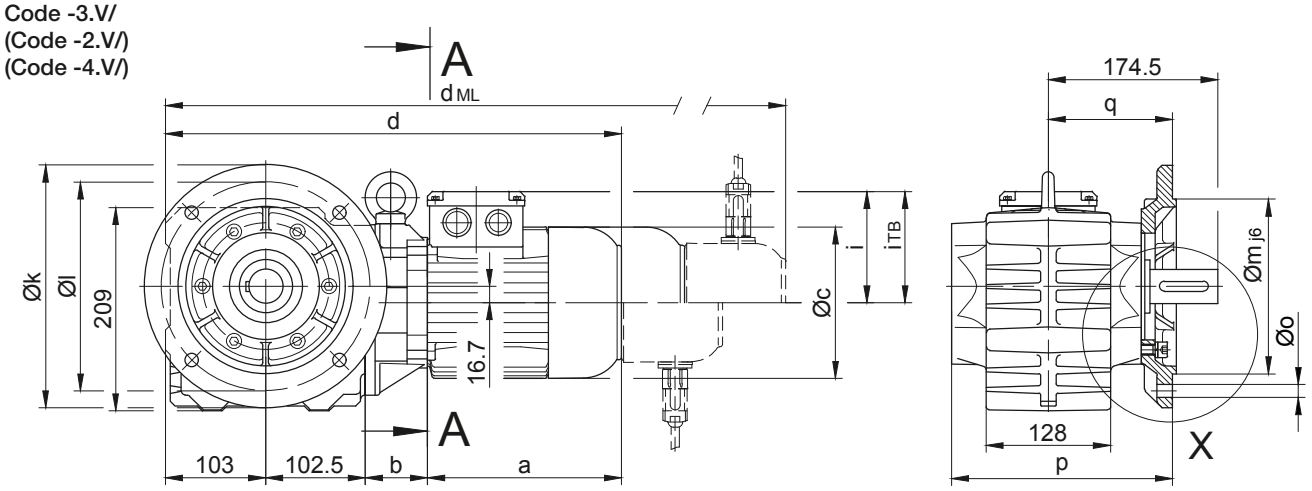

Code -.4/

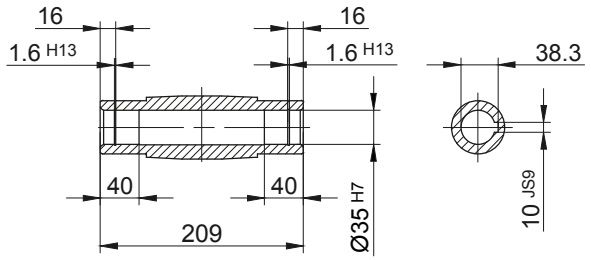

Code -.1/

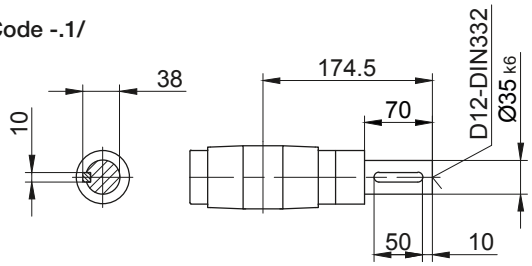

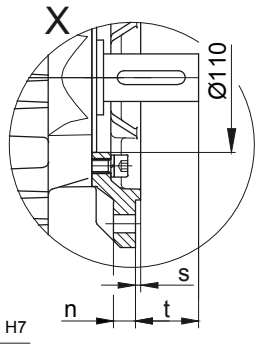

Code -.5/

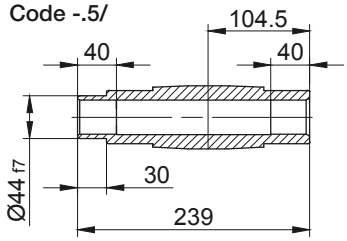

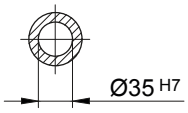

Code -.3/

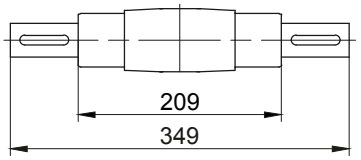

13

Flange Dimensions										
Type	Design	k	l	m	n	o	p	q	s	t
BS20..	Code -3.V/	250	215	180	16	13.5	227.5	128	4	46.5
BS20..	Code -2.V/	200	165	130	12	11	224.5	125	3.5	49.5
BS20..	Code -4.V/	300	265	230	20	13.5	233.5	134	4	40.5
Dimensions in millimetres (mm										

Standard

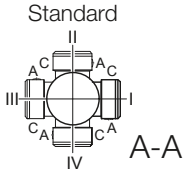

Type	a	b	c	d	i	Design with motor extensions				
						i_{TB}	Brake	Encoder	Brake with Encoder	Back Stop
							d_{ML}	d_{ML}	d_{ML}	d_{ML}
BS20Z-../D04.A.	142.5	100	110.5	448	90	112	491.5	535.5	579	-
BS20-../D..05.A.	170.5	60	123	436	101.5	117	478	538.5	576	-
BS20Z-../D..05.A.	170.5	102	123	478	101.5	117	520	580.5	618	-
BS20-../D..06.A.	170.5	60	123	436	101.5	119	478	538.5	576	-
BS20Z-../D..06.A.	170.5	102	123	478	101.5	119	520	580.5	618	-
BS20-../D..07.A.	190.5	60	123	456	101.5	119	498	558.5	596	-
BS20Z-../D..07.A.	190.5	102	123	498	101.5	119	540	600.5	638	-
BS20-../D..08.A.	199.5	64	156	469	116	136.5	535	581	642.5	535
BS20Z-../D..08.A.	199.5	146	156	551	116	136.5	617	663	724.5	617
BS20-../D..08.B.	229.5	64	156	499	116	136.5	565	611	672	565
BS20Z-../D..08.B.	229.5	146	156	581	116	136.5	647	693	754	647
BS20-../D..09.A.	250.5	78.5	176	534.5	125.5	157	627.5	642	731.5	627.5
BS20-../D..09.B.	308.5	78.5	176	592.5	125.5	157	685.5	699.5	789.5	685.5
Dimensions in millimetres (mm)										

The actual gearbox design can vary from the geometry shown. Generate drive specific 3D and 2D geometries under www.BauerCat.com.

BS20-BS20Z

Torque arm at front
Code -5.V/

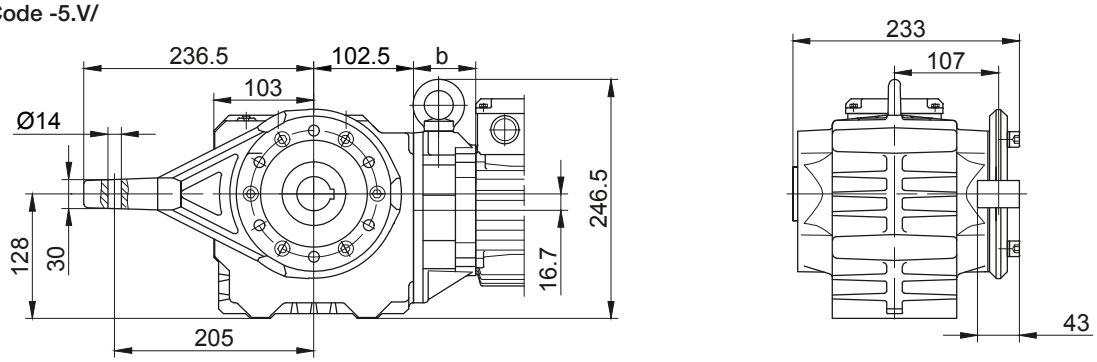

Flange with tapped holes at front
Code -7.V/

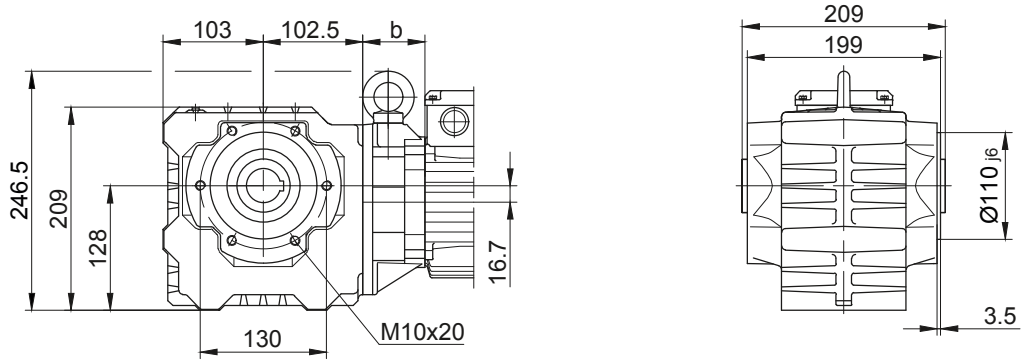

Foot with tapped holes at bottom
Code -6.U/

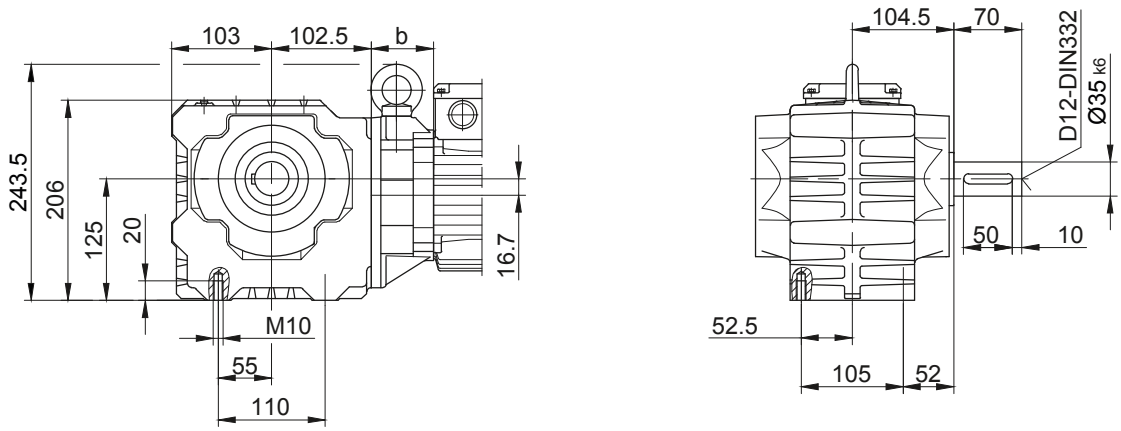

Foot with clearance holes at bottom
Code -1.U/

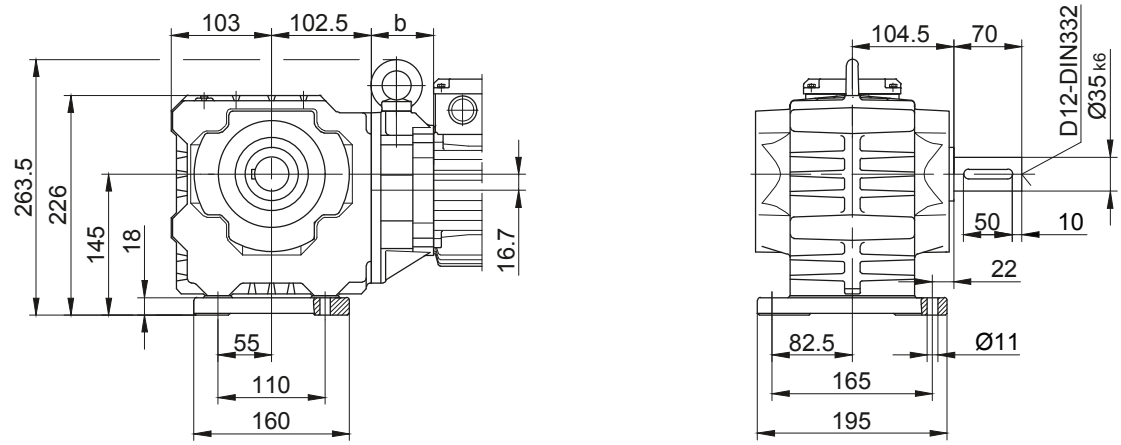

The actual gearbox design can vary from the geometry shown. Generate drive specific 3D and 2D geometries under www.BauerCat.com.

BS-series worm-geared motors

Dimension - Standard

BS30-BS30Z

Flange with clearance holes at front

Code -3.V/
(Code -4.V/)

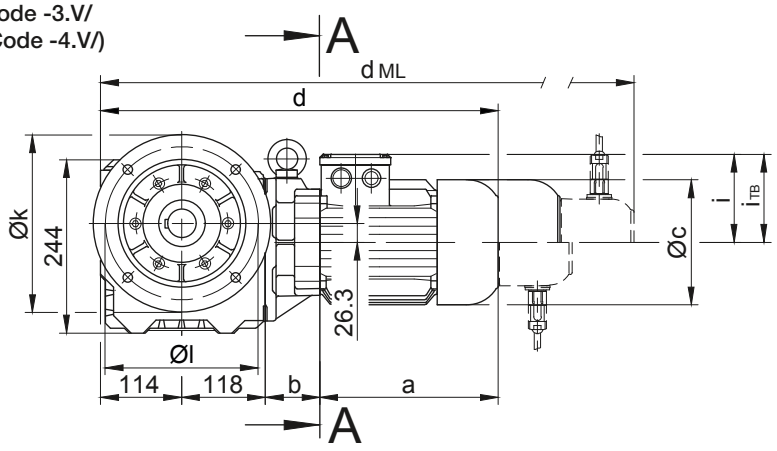

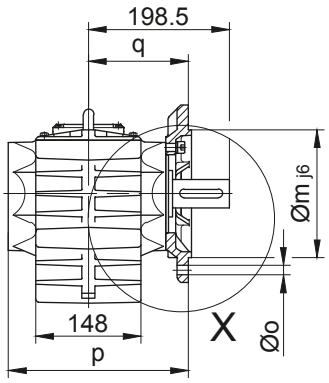

Code -.4/

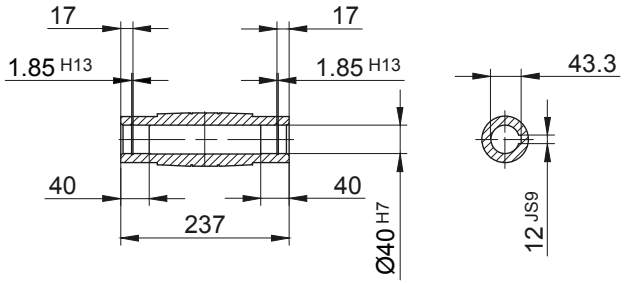

Code -.1/

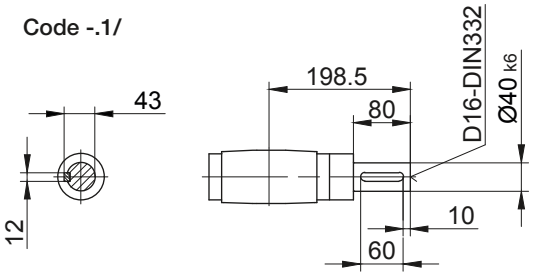

Code -.5/

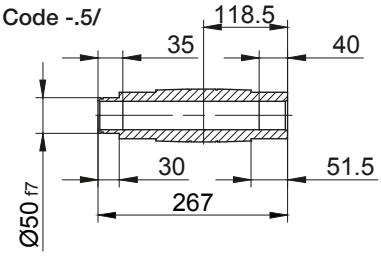

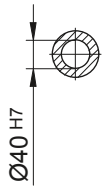

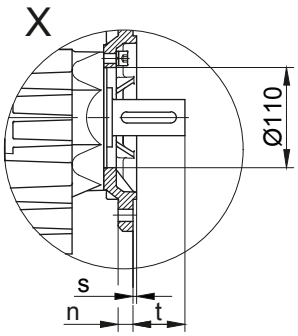

Code -.3/

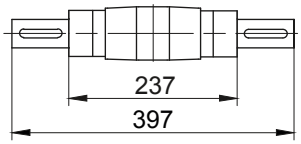

Standard

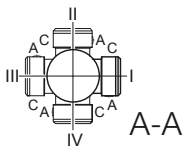

13

Flange Dimensions										
Type	Design	k	l	m	n	o	p	q	s	t
BS30..	Code -3.V/	250	215	180	16	13.5	253.5	141	4	57.5
BS30..	Code -4.V/	300	265	230	20	13.5	259.5	147	4	51.5
Dimensions in millimetres (mm										

Type	a	b	c	d	i	Design with motor extensions				
						i_{TB}	Brake	Encoder	Brake with Encoder	Back Stop
							d_{ML}	d_{ML}	d_{ML}	d_{ML}
BS30-../D..05.A.	170.5	58	123	460.5	101.5	117	502.5	563	600.5	-
BS30Z-../D..05.A.	170.5	133.5	123	536	101.5	117	578	638.5	676	-
BS30-../D..06.A.	170.5	58	123	460.5	101.5	119	502.5	563	600.5	-
BS30Z-../D..06.A.	170.5	133.5	123	536	101.5	119	578	638.5	676	-
BS30-../D..07.A.	190.5	58	123	480.5	101.5	119	522.5	583	620.5	-
BS30Z-../D..07.A.	190.5	133.5	123	556	101.5	119	598	658.5	696	-
BS30-../D..08.A.	199.5	62	156	493.5	116	136.5	559.5	605.5	667	559.5
BS30Z-../D..08.A.	199.5	137.5	156	569	116	136.5	635	681	742.5	635
BS30-../D..08.B.	229.5	62	156	523.5	116	136.5	589.5	635.5	696.5	589.5
BS30Z-../D..08.B.	229.5	137.5	156	599	116	136.5	665	711	772	665
BS30-../D..09.A.	250.5	76.5	176	559	125.5	157	652	666.5	756	652
BS30Z-../D..09.A.	250.5	152	176	634.5	125.5	157	727.5	742	831.5	727.5
BS30-../D..09.B.	308.5	76.5	176	617	125.5	157	710	724	814	710
BS30Z-../D..09.B.	308.5	152	176	692.5	125.5	157	785.5	799.5	889.5	785.5
BS30-../D..11.A.	319	83	218	634	165	176	732	741.5	834	732
BS30-../D..11.B.	387	83	218	702	165	176	798	809.5	902	798
Dimensions in millimetres (mm)										

The actual gearbox design can vary from the geometry shown. Generate drive specific 3D and 2D geometries under www.BauerCat.com.

BS30-BS30Z

Torque arm at front

Code -5.V/

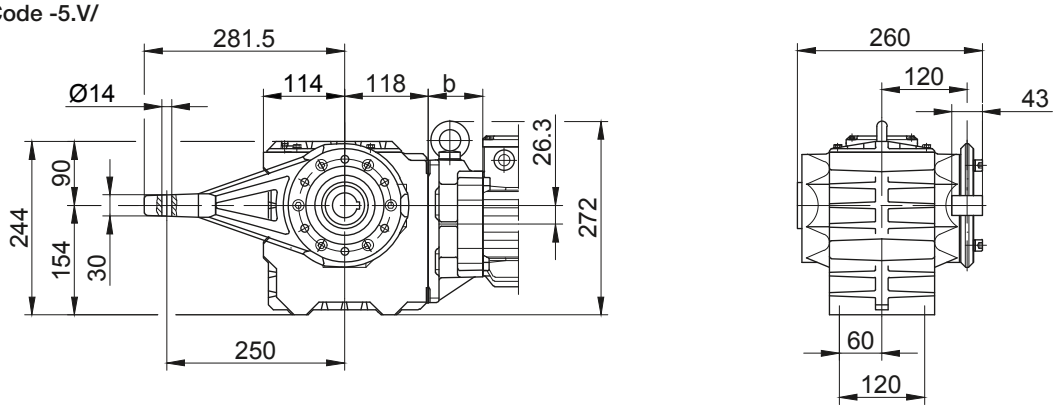

Flange with tapped holes at front

Code -7.V/

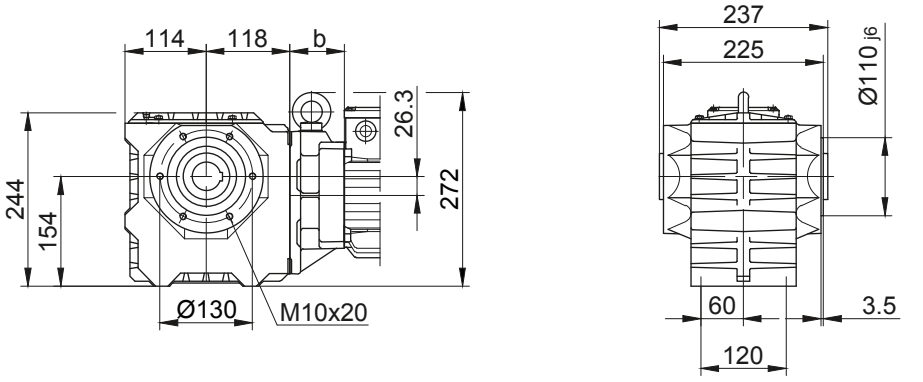

Foot with tapped holes at bottom

Code -6.U/

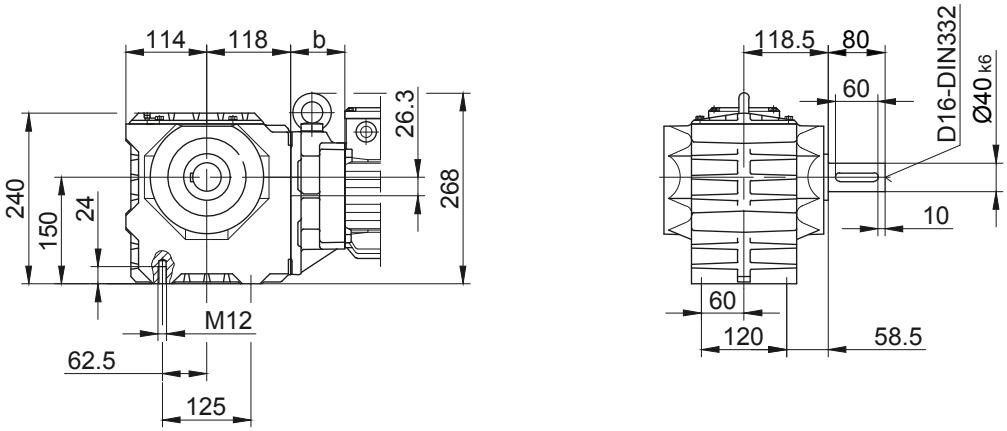

Foot with clearance holes at bottom

Code -1.U/

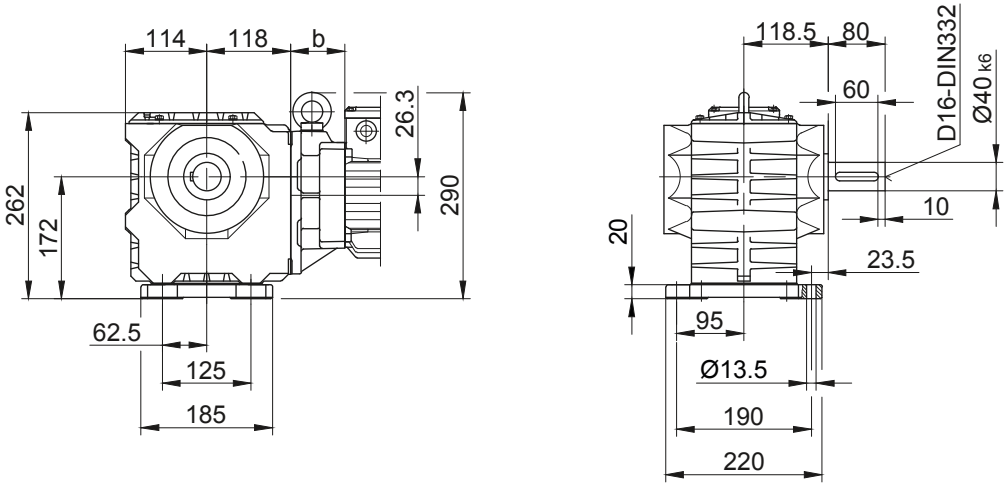

The actual gearbox design can vary from the geometry shown. Generate drive specific 3D and 2D geometries under www.BauerCat.com.

BS-series worm-geared motors

Dimension - Standard

BS40-BS40Z

Flange with clearance holes at front

Code -3.V/

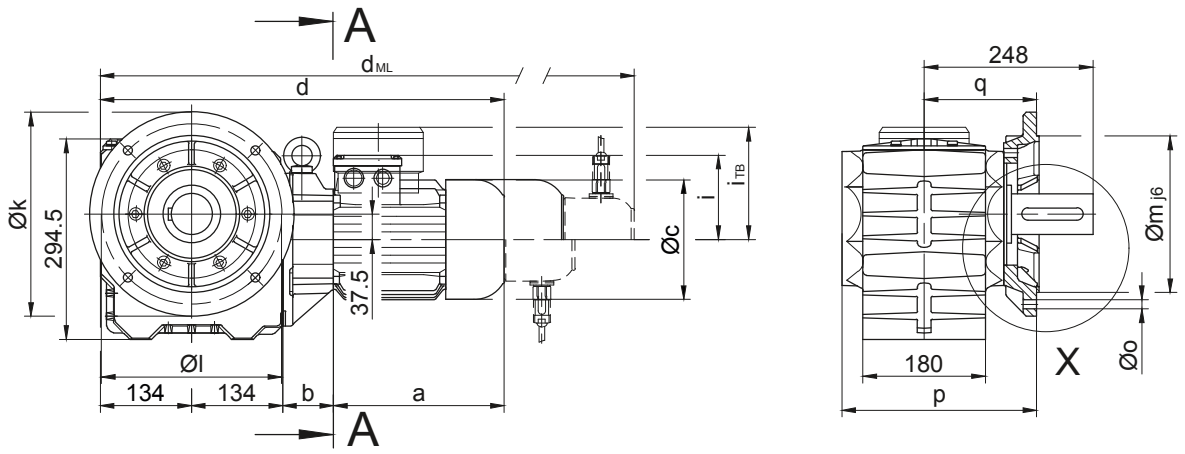

Code -.4/

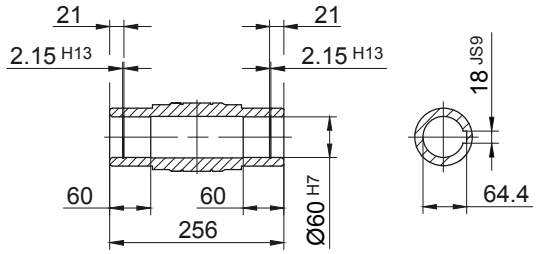

Code -.1/

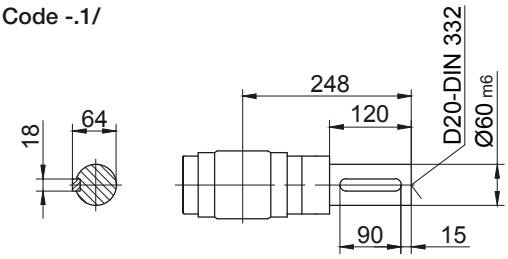

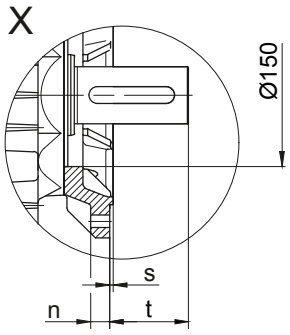

Code -.5/

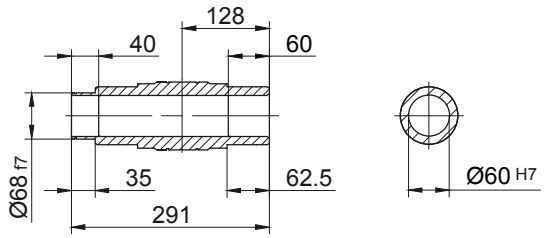

Code -.3/

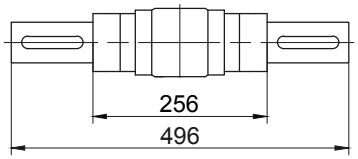

Standard

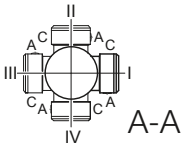

Flange Dimensions										
Type	Design	k	l	m	n	o	p	q	s	t
BS40..	Code -3.V/	300	265	230	20	13.5	286	165	4	83
Dimensions in millimetres (mm										

Type	a	b	c	d	i	Design with motor extensions				
						i_{TB}	Brake	Encoder	Brake with Encoder	Back Stop
							d_{ML}	d_{ML}	d_{ML}	d_{ML}
BS40Z-../D..05.A.	170.5	138.5	123	577	101.5	117	619	679.5	717	-
BS40Z-../D..06.A.	170.5	138.5	123	577	101.5	119	619	679.5	717	-
BS40Z-../D..07.A.	190.5	138.5	123	597	101.5	119	639	699.5	737	-
BS40-../D..08.A.	199.5	60	156	527.5	116	136.5	593.5	639.5	701	593.5
BS40Z-../D..08.A.	199.5	142.5	156	610	116	136.5	676	722	783.5	676
BS40-../D..08.B.	229.5	60	156	557.5	116	136.5	623.5	669.5	730.5	623.5
BS40Z-../D..08.B.	229.5	142.5	156	640	116	136.5	706	752	813	706
BS40-../D..09.A.	250.5	74.5	176	593	125.5	157	686	700.5	790	686
BS40Z-../D..09.A.	250.5	157	176	675.5	125.5	157	768.5	783	872.5	768.5
BS40-../D..09.B.	308.5	74.5	176	651	125.5	157	744	758	848	744
BS40Z-../D..09.B.	308.5	157	176	733.5	125.5	157	826.5	840.5	930.5	826.5
BS40-../D..11.A.	319	81	218	668	165	176	766	775.5	868	766
BS40-../D..11.B.	387	81	218	736	165	176	832	843.5	936	832
Dimensions in millimetres (mm)										

The actual gearbox design can vary from the geometry shown. Generate drive specific 3D and 2D geometries under www.BauerCat.com.

BS40-BS40Z

Torque arm at front

Code -5.V/

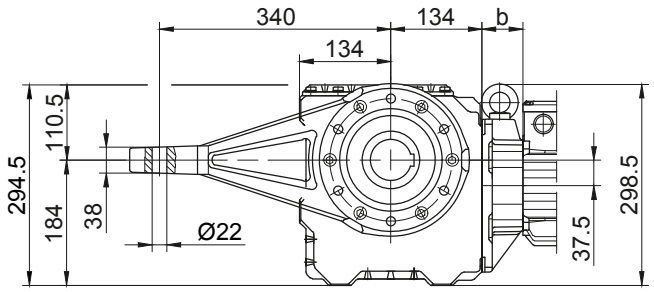

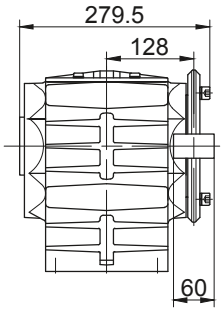

Flange with tapped holes at front

Code -7.V/

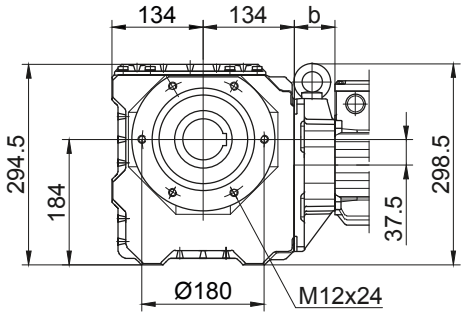

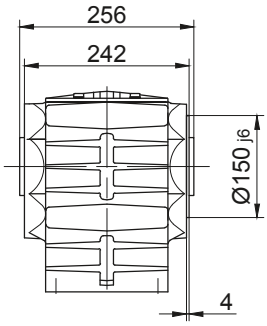

Foot with tapped holes at bottom

Code -6.U/

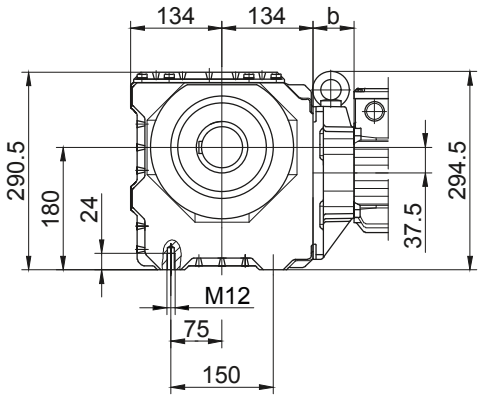

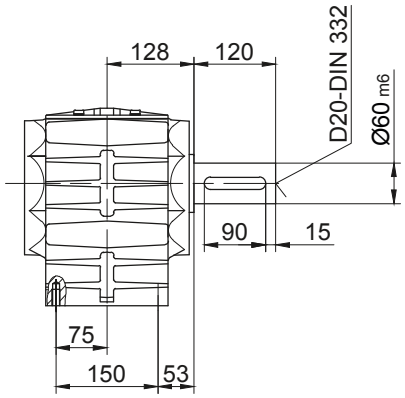

Foot with clearance holes at bottom

Code -1.U/

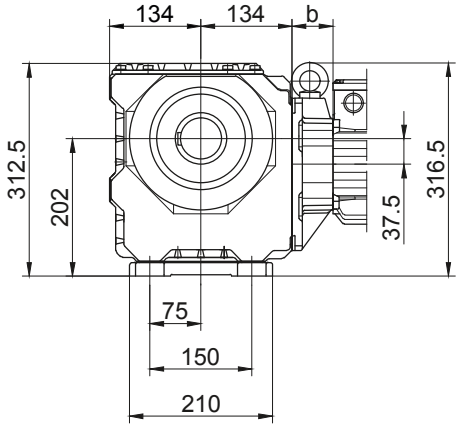

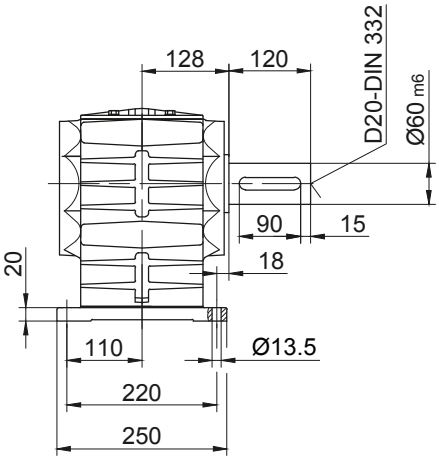

The actual gearbox design can vary from the geometry shown. Generate drive specific 3D and 2D geometries under www.BauerCat.com.

BS-series worm-geared motors

Dimension - Tandem Gearbox

BS06G04

Flange with clearance holes at front

Code -3.V/
(Code -4.V/)

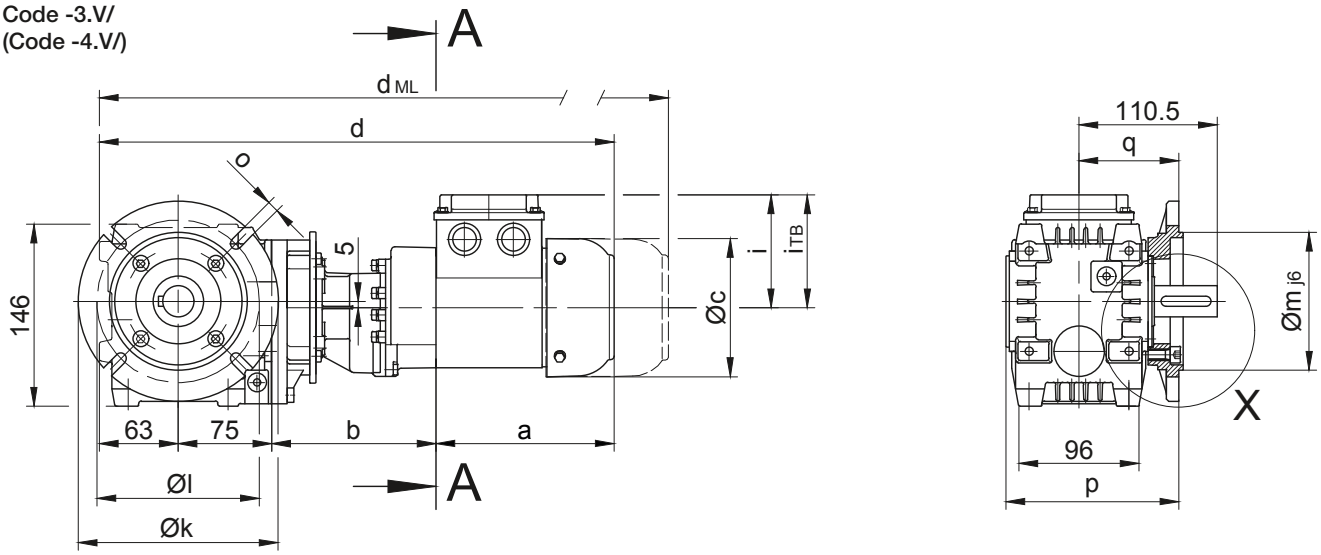

Code -.4/
Standard

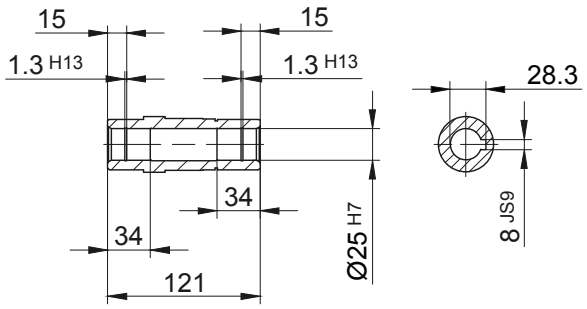

Code -.1/

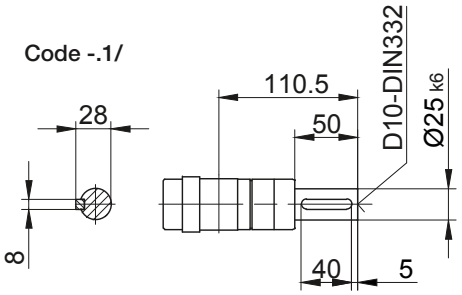

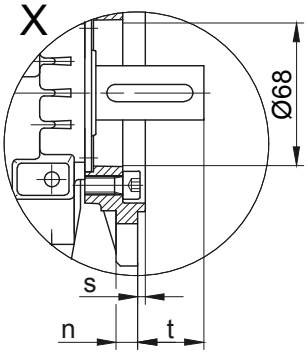

Code -.4/K20

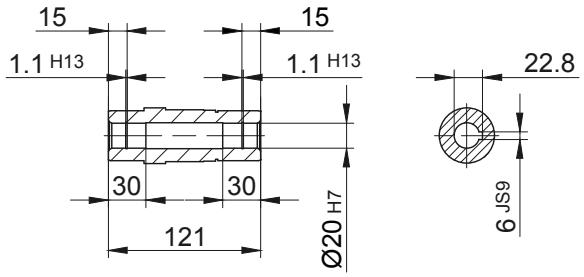

Code -.3/

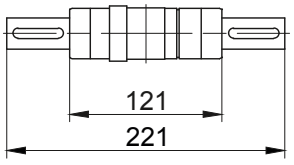

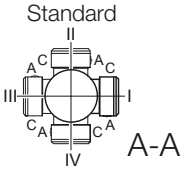

Flange Dimensions										
Type	Design	k	l	m	n	o	p	q	s	t
BS06..	Code -3.V/	140	115	95	10	9	138.3	80	3	30.5
BS06..	Code -4.V/	160	130	110	10	9	138.3	80	3.5	30.5
Dimensions in millimetres (mm										

Type	a	b	c	d	i	Design with motor extensions				
						i_{TB}	Brake	Encoder	Brake with Encoder	Back Stop
							d_{ML}	d_{ML}	d_{ML}	d_{ML}
BS06G04-../D04.A.	142.5	131	110.5	411.5	90	112	455	499	542.5	-
Dimensions in millimetres (mm)										

The actual gearbox design can vary from the geometry shown. Generate drive specific 3D and 2D geometries under www.BauerCat.com.

BS06G04

Torque arm at front
Code -5.V/

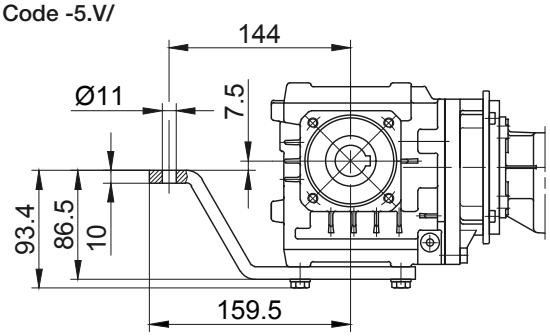

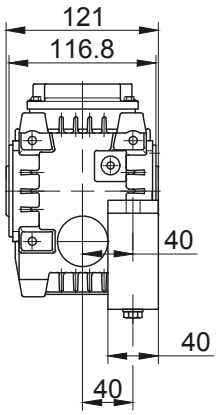

Flange with tapped holes at front
Code -7.V/

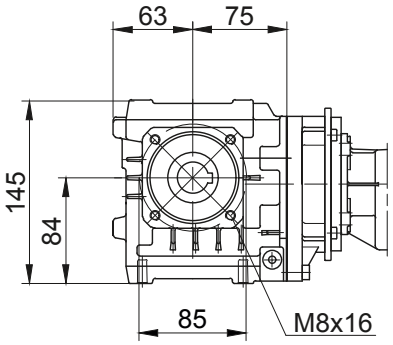

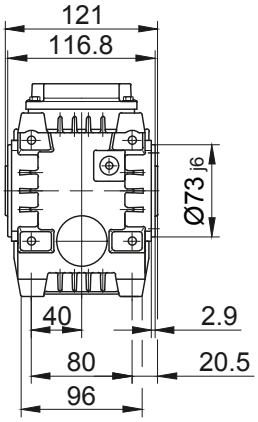

Foot with tapped holes at bottom
Code -6.U/

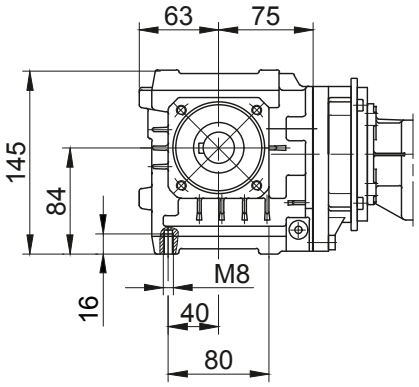

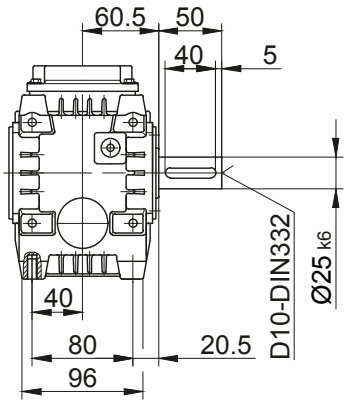

Foot with clearance holes at bottom
Code -1.U/

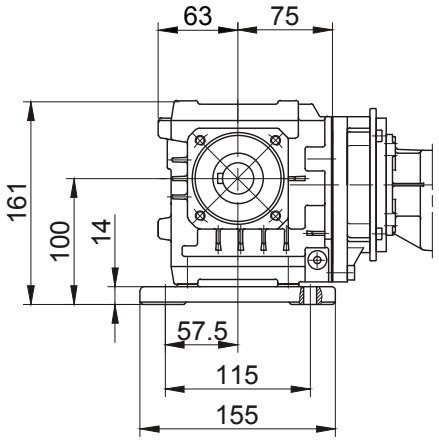

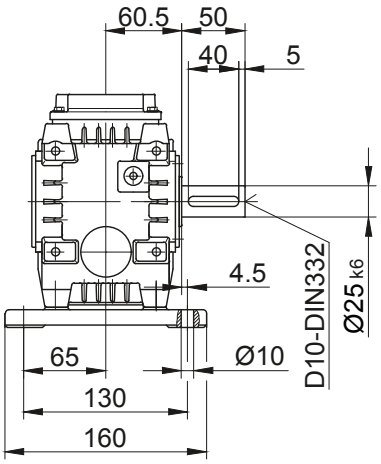

BS-series worm-geared motors

Dimension - Tandem Gearbox

BS10G06

Flange with clearance holes at front

Code -3.V/
(Code -2.V/)

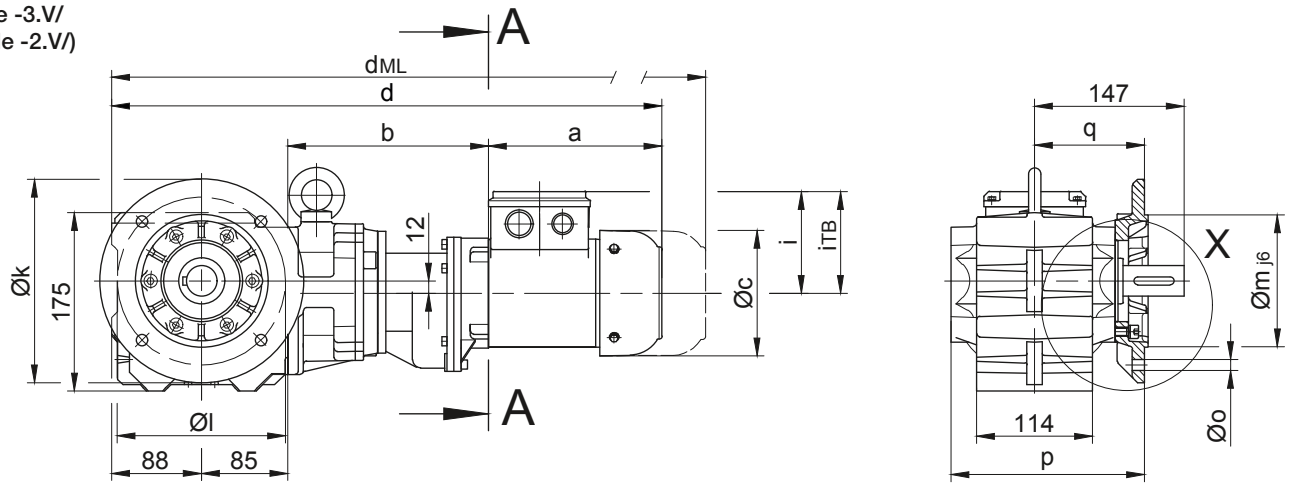

Code -.4/

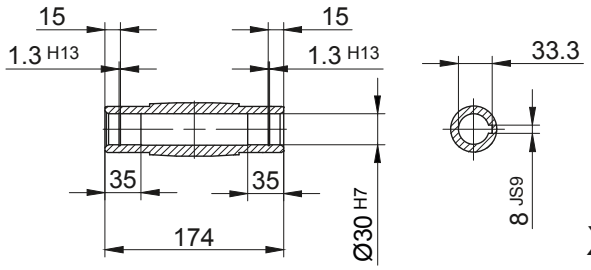

Code -.1/

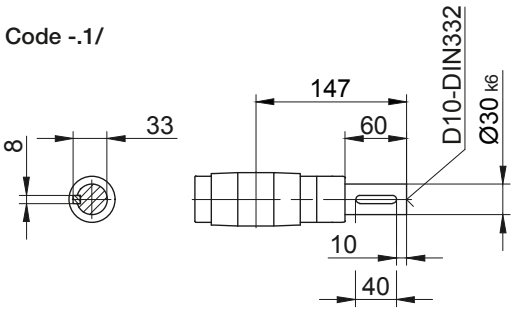

Code -.5/

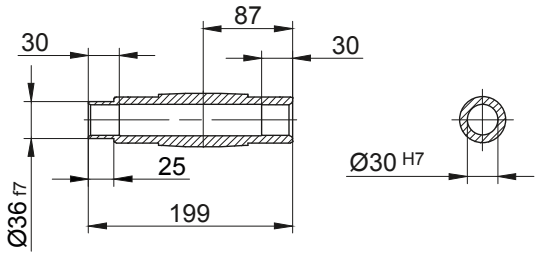

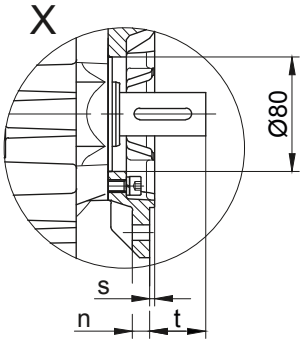

Code -.3/

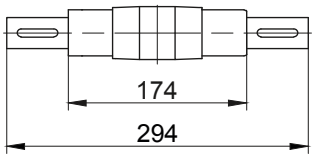

Standard

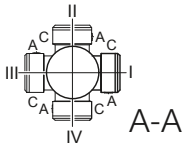

Flange Dimensions										
Type	Design	k	l	m	n	o	p	q	s	t
BS10..	Code -3.V/	200	165	130	12	11	190	108	3.5	39
BS10..	Code -2.V/	160	130	110	10	9	183	101	3.5	46
Dimensions in millimetres (mm										

Type	a	b	c	d	i	Design with motor extensions				
						i_{TB}	Brake	Encoder	Brake with Encoder	Back Stop
							d_{ML}	d_{ML}	d_{ML}	d_{ML}
BS10G06-../D04.A.	142.5	195	110.5	510.5	90	112	554	598	641.5	-
BS10G06-../D..05.A.	170.5	197	123	540.5	101.5	117	582.5	643	680.5	-
BS10G06-../D..06.A.	170.5	197	123	540.5	101.5	119	582.5	643	680.5	-
BS10G06-../D..07.A.	190.5	197	123	560.5	101.5	119	602.5	663	700.5	-
BS10G06-../D..08.A.	199.5	241	156	613.5	116	136.5	679.5	725.5	787	679.5
BS10G06-../D..08.B.	229.5	241	156	643.5	116	136.5	709.5	755.5	816.5	709.5
Dimensions in millimetres (mm)										

The actual gearbox design can vary from the geometry shown. Generate drive specific 3D and 2D geometries under www.BauerCat.com.

BS10G06

Torque arm at front

Code -5.V/

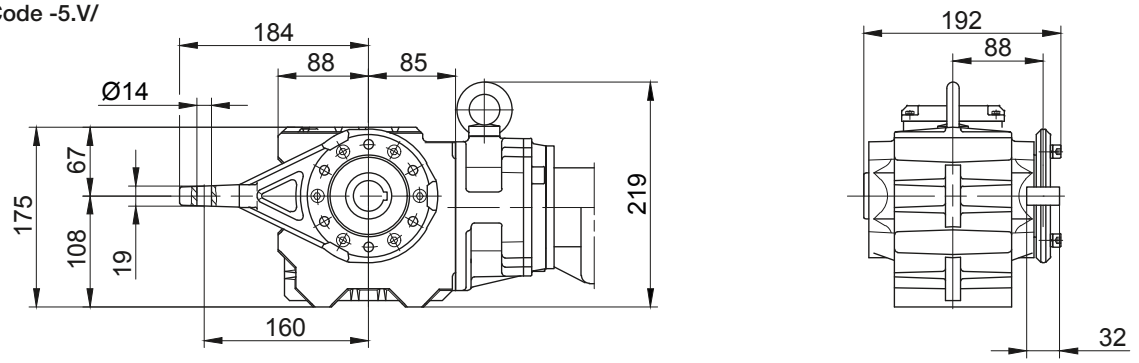

Flange with tapped holes at front

Code -7.V/

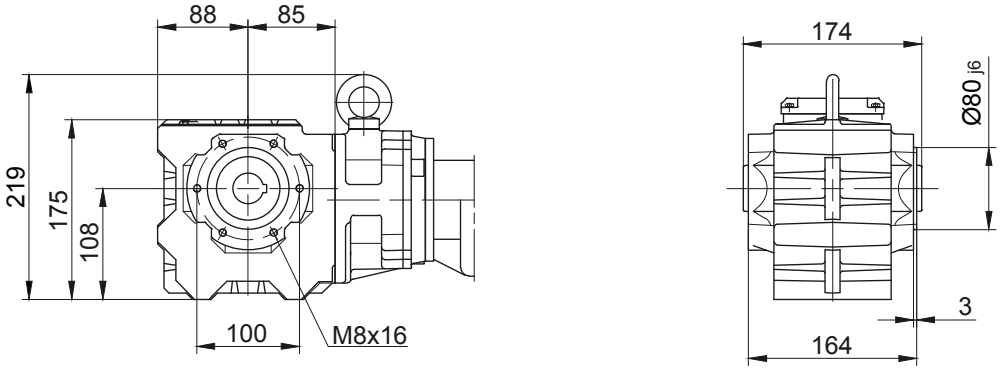

Foot with tapped holes at bottom

Code -6.U/

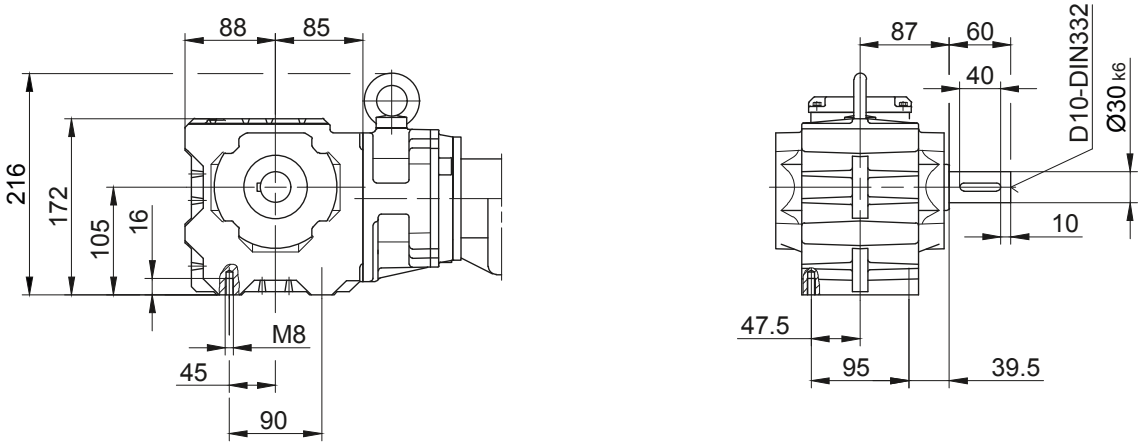

Foot with clearance holes at bottom

Code -1.U/

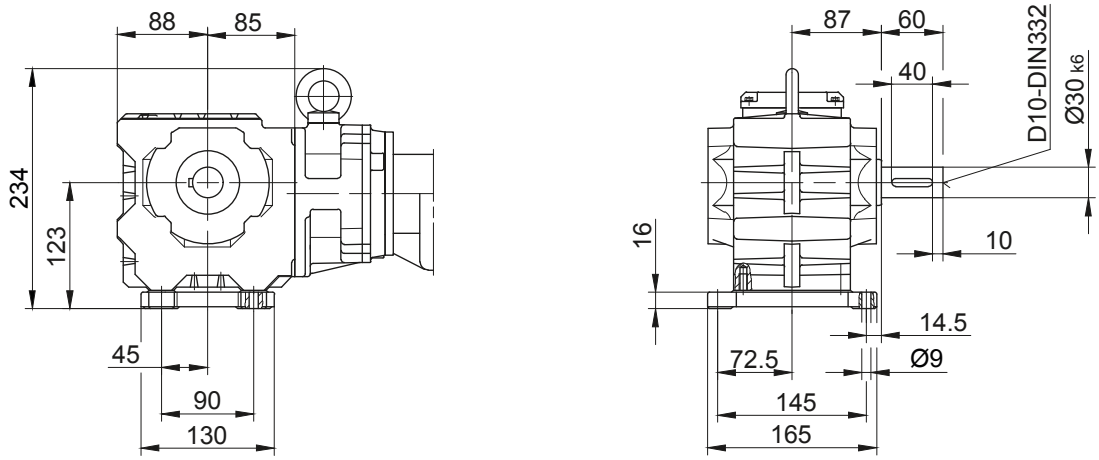

The actual gearbox design can vary from the geometry shown. Generate drive specific 3D and 2D geometries under www.BauerCat.com.

BS-series worm-geared motors

Dimension - Tandem Gearbox

BS20G06

Flange with clearance holes at front

Code -3.V/
(Code -2.V/)
(Code -4.V/)

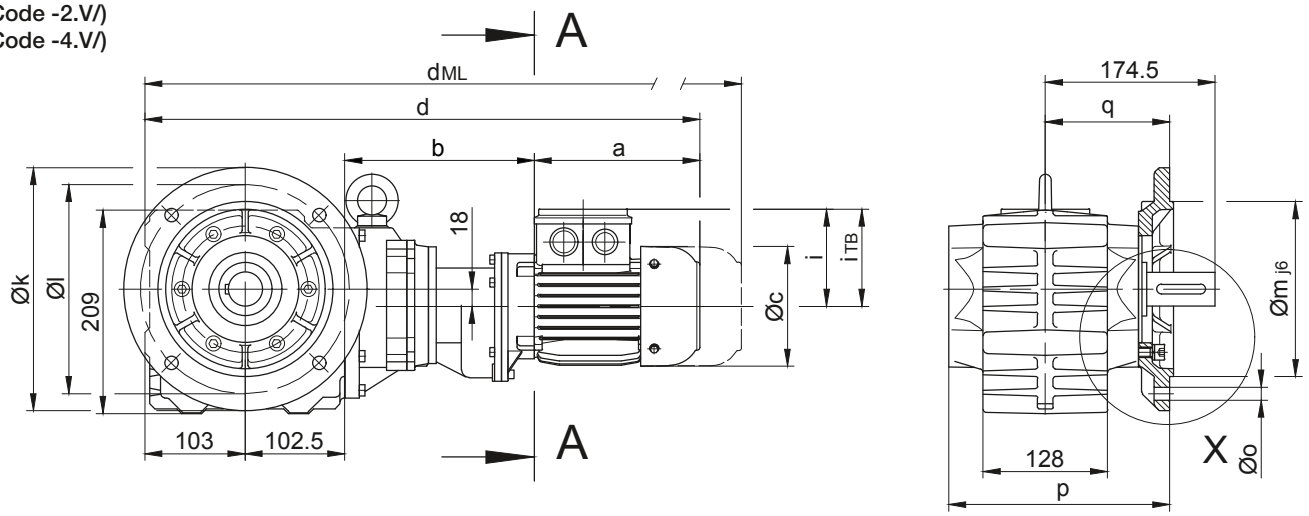

Code -.4/

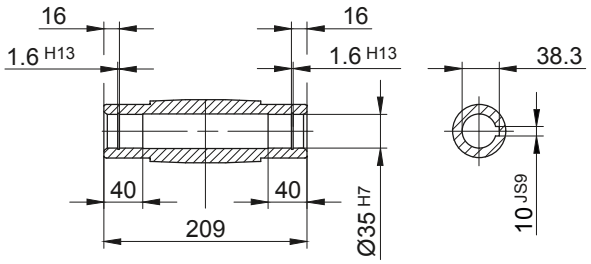

Code -.1/

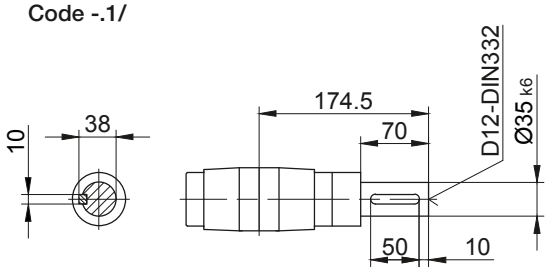

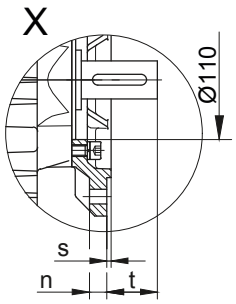

Code -.5/

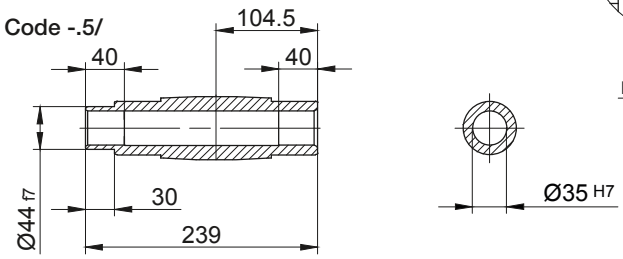

Code -.3/

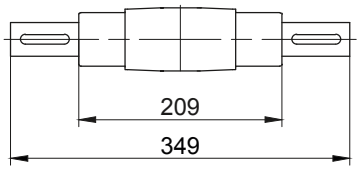

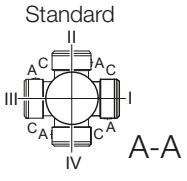

Flange Dimensions										
Type	Design	k	l	m	n	o	p	q	s	t
BS20..	Code -3.V/	250	215	180	16	13.5	227.5	128	4	46.5
BS20..	Code -2.V/	200	165	130	12	11	224.5	125	3.5	49.5
BS20..	Code -4.V/	300	265	230	20	13.5	233.5	134	4	40.5
Dimensions in millimetres (mm										

Type	a	b	c	d	i	Design with motor extensions				
						i_{TB}	Brake	Encoder	Brake with Encoder	Back Stop
							d_{ML}	d_{ML}	d_{ML}	d_{ML}
BS20G06-../D04.A.	142.5	193	110.5	541	90	112	584.5	628.5	672	-
BS20G06-../D..05.A.	170.5	195	123	571	101.5	117	613	673.5	711	-
BS20G06-../D..06.A.	170.5	195	123	571	101.5	119	613	673.5	711	-
BS20G06-../D..07.A.	190.5	195	123	591	101.5	119	633	693.5	731	-
BS20G06-../D..08.A.	199.5	239	156	644	116	136.5	710	756	817.5	710
BS20G06-../D..08.B.	229.5	239	156	674	116	136.5	740	786	847	740
Dimensions in millimetres (mm)										

The actual gearbox design can vary from the geometry shown. Generate drive specific 3D and 2D geometries under www.BauerCat.com.

BS20G06

Torque arm at front

Code -5.V/

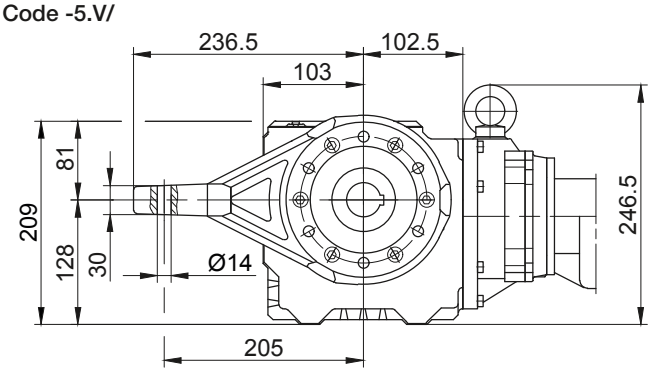

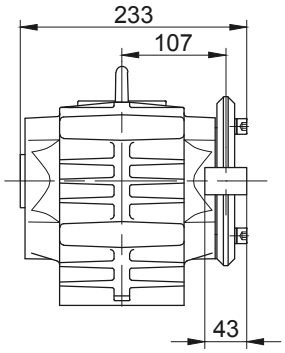

Flange with tapped holes at front

Code -7.V/

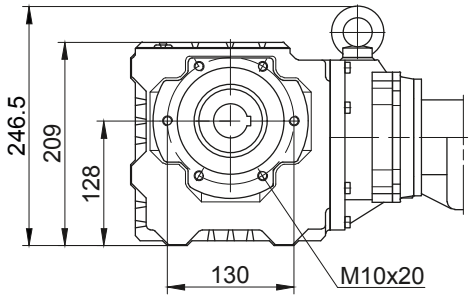

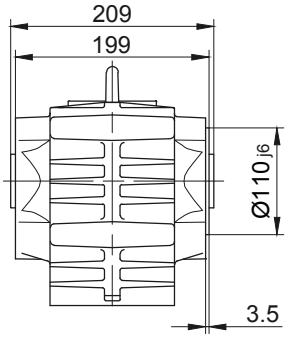

Foot with tapped holes at bottom

Code -6.U/

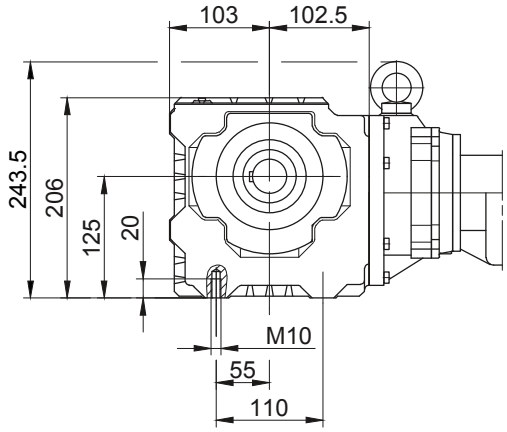

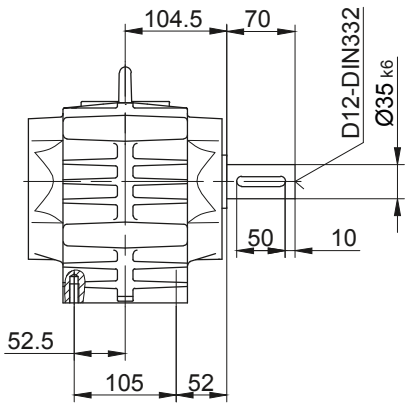

Foot with clearance holes at bottom

Code -1.U/

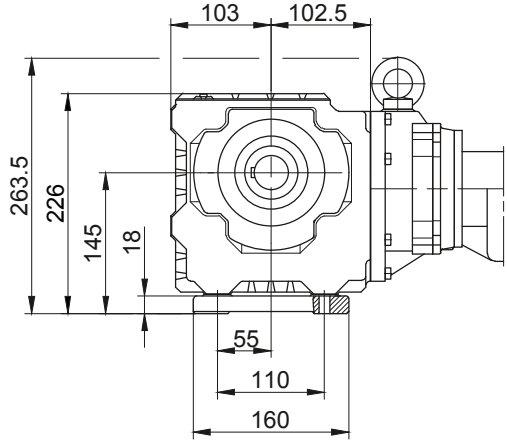

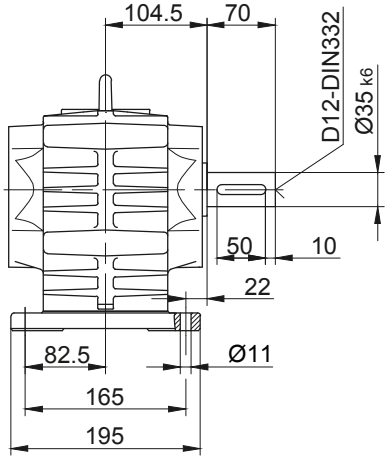

The actual gearbox design can vary from the geometry shown. Generate drive specific 3D and 2D geometries under www.BauerCat.com.

BS-series worm-geared motors

Dimension - Tandem Gearbox

BS30G06

Flange with clearance holes at front

Code -3.V/
(Code -4.V/)

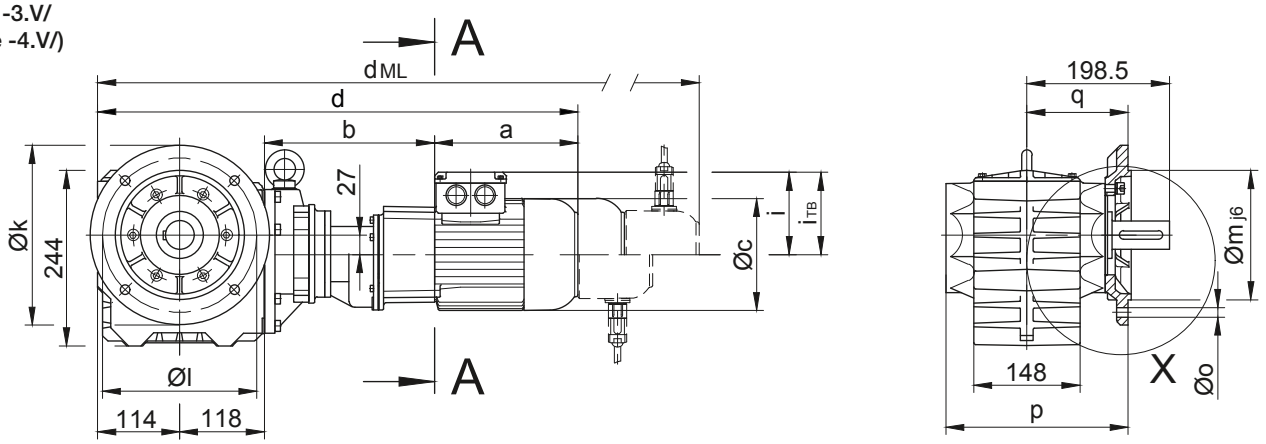

Code -.4/

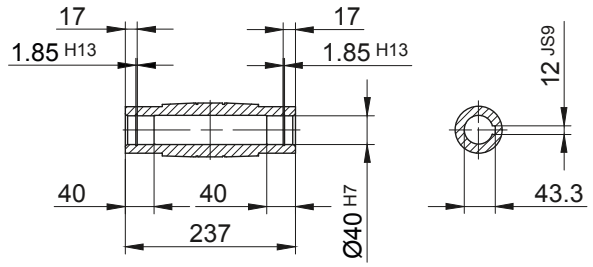

Code -.1/

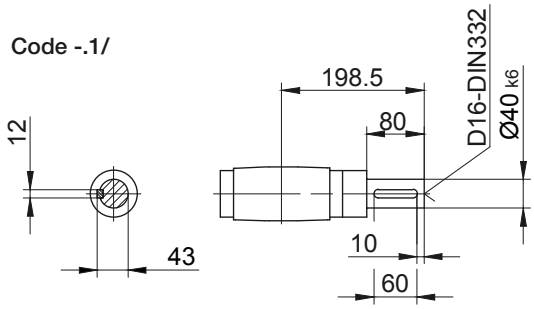

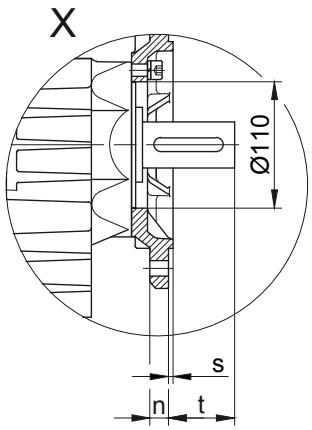

Code -.5/

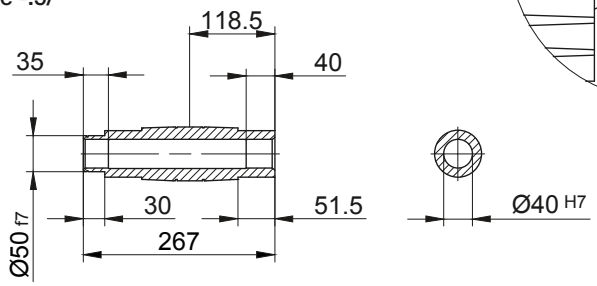

Code -.3/

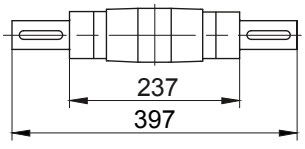

Standard

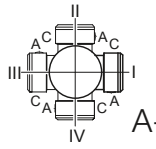

Flange Dimensions										
Type	Design	k	l	m	n	o	p	q	s	t
BS30..	Code -3.V/	250	215	180	16	13.5	253.5	141	4	57.5
BS30..	Code -4.V/	300	265	230	20	13.5	259.5	147	4	51.5
Dimensions in millimetres (mm										

Type	a	b	c	d	i	Design with motor extensions				
						i_{TB}	Brake	Encoder	Brake with Encoder	Back Stop
							d_{ML}	d_{ML}	d_{ML}	d_{ML}
BS30G06-../D04.A.	142.5	191	110.5	565.5	90	112	609	653	696.5	-
BS30G06-../D..05.A.	170.5	193	123	595.5	101.5	117	637.5	698	735.5	-
BS30G06-../D..06.A.	170.5	193	123	595.5	101.5	119	637.5	698	735.5	-
BS30G06-../D..07.A.	190.5	193	123	615.5	101.5	119	657.5	718	755.5	-
BS30G06-../D..08.A.	199.5	237	156	668.5	116	136.5	734.5	780.5	842	734.5
BS30G06-../D..08.B.	229.5	237	156	698.5	116	136.5	764.5	810.5	871.5	764.5
Dimensions in millimetres (mm)										

The actual gearbox design can vary from the geometry shown. Generate drive specific 3D and 2D geometries under www.BauerCat.com.

BS30G06

Torque arm at front

Code -5.V/

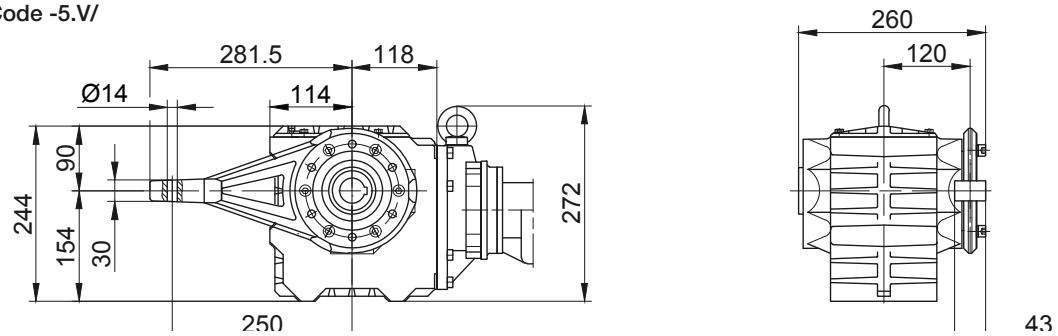

Flange with tapped holes at front

Code -7.V/

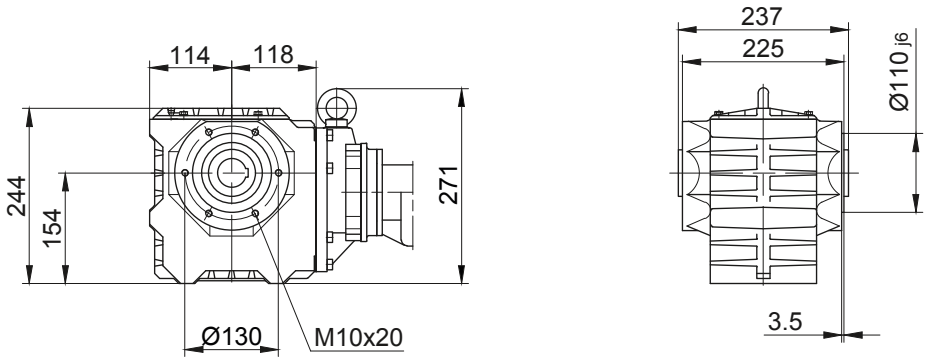

Foot with tapped holes at bottom

Code -6.U/

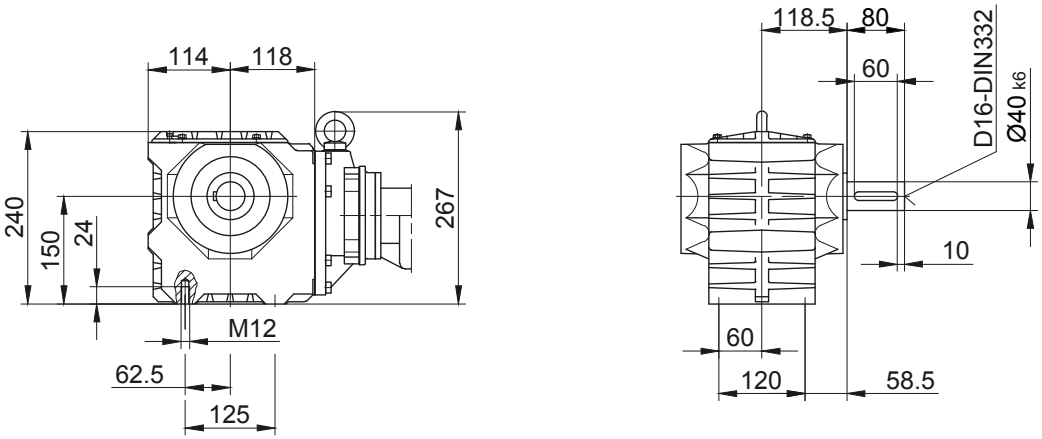

Foot with clearance holes at bottom

Code -1.U/

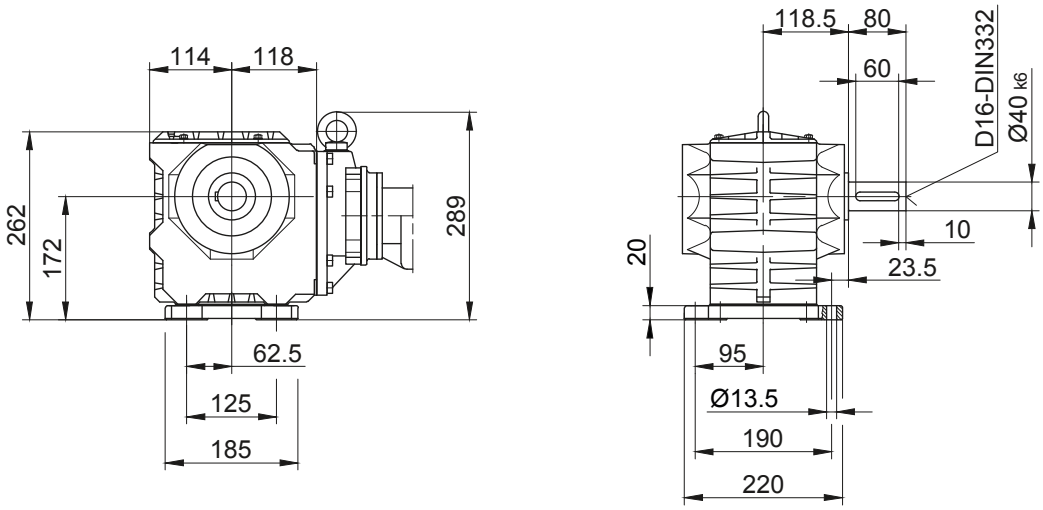

13

The actual gearbox design can vary from the geometry shown. Generate drive specific 3D and 2D geometries under www.BauerCat.com.

BS-series worm-geared motors

Dimension - Tandem Gearbox

BS40G10

Flange with clearance holes at front

Code -3.V/

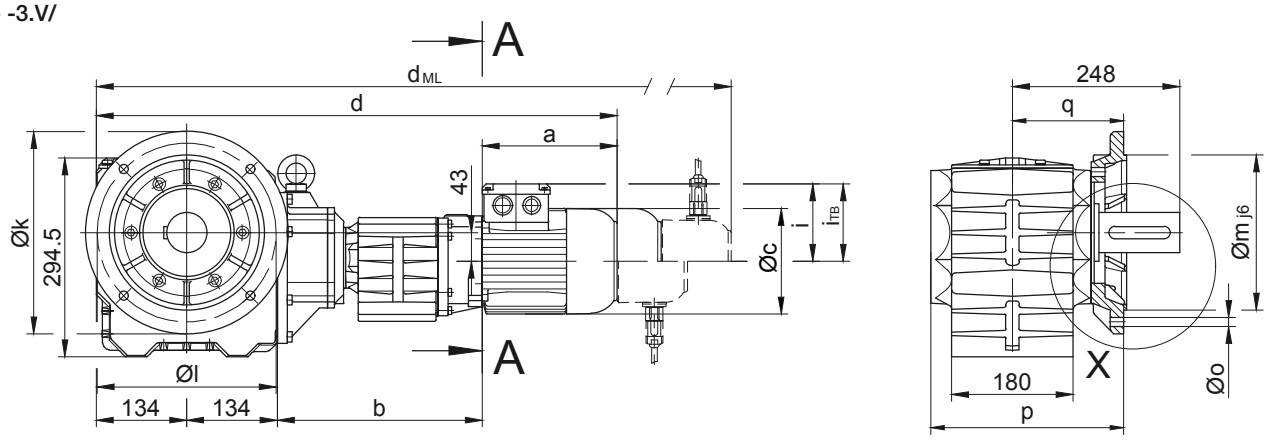

Code -.4/

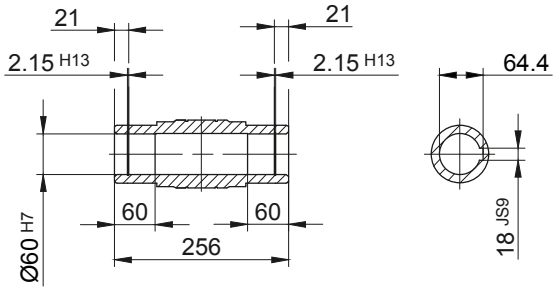

Code -.1/

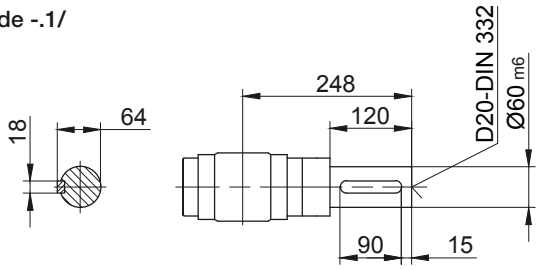

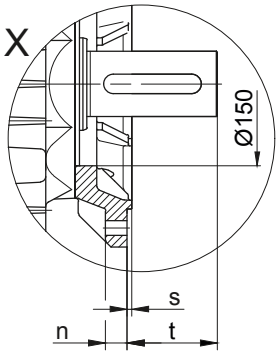

Code -.5/

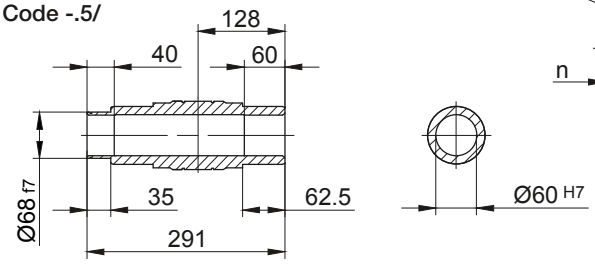

Code -.3/

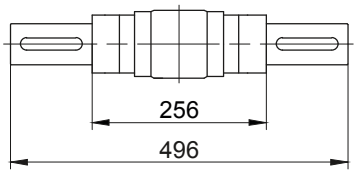

Standard

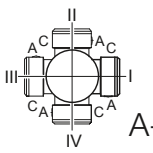

Flange Dimensions										
Type	Design	k	l	m	n	o	p	q	s	t
BS40..	Code -3.V/	300	265	230	20	13.5	286	165	4	83
Dimensions in millimetres (mm										

Type	a	b	c	d	i	Design with motor extensions				
						i_{TB}	Brake	Encoder	Brake with Encoder	Back Stop
							d_{ML}	d_{ML}	d_{ML}	d_{ML}
BS40G10-../D..05.A.	170.5	300	123	738.5	101.5	117	780.5	841	878.5	-
BS40G10-../D..06.A.	170.5	300	123	738.5	101.5	119	780.5	841	878.5	-
BS40G10-../D..07.A.	190.5	300	123	758.5	101.5	119	800.5	861	898.5	-
BS40G10-../D..08.A.	199.5	304	156	771.5	116	136.5	837.5	883.5	945	837.5
BS40G10-../D..08.B.	229.5	304	156	801.5	116	136.5	867.5	913.5	974.5	867.5
BS40G10-../D..09.A.	250.5	318.5	176	837	125.5	157	930	944.5	1034	930
BS40G10-../D..09.B.	308.5	318.5	176	895	125.5	157	988	1002	1092	988
Dimensions in millimetres (mm)										

The actual gearbox design can vary from the geometry shown. Generate drive specific 3D and 2D geometries under www.BauerCat.com.

BS40G10

Torque arm at front

Code -5.V/

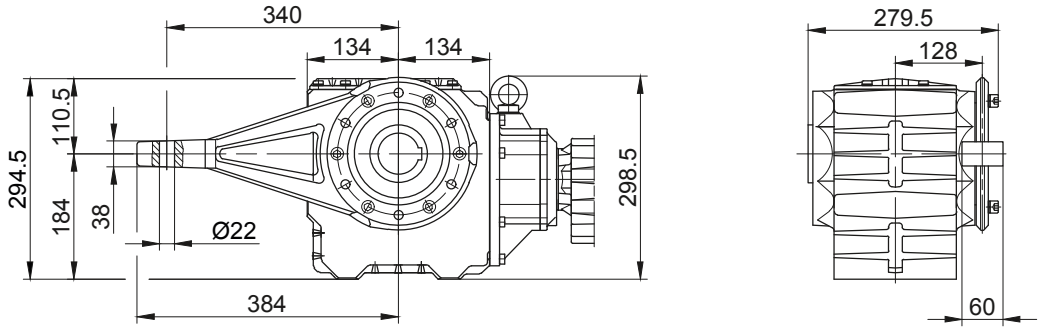

Flange with tapped holes at front

Code -7.V/

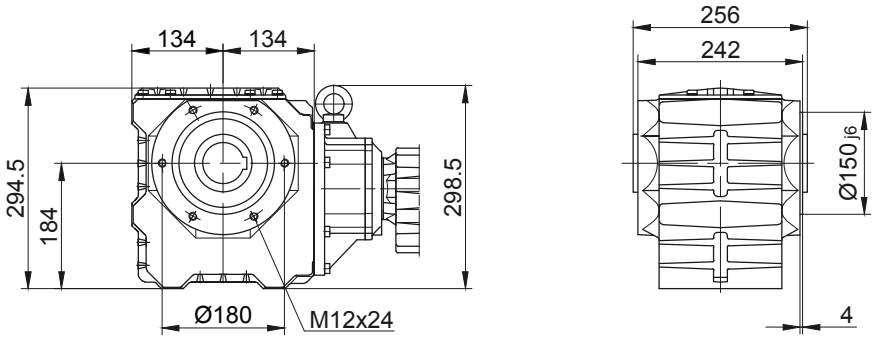

Foot with tapped holes at bottom

Code -6.U/

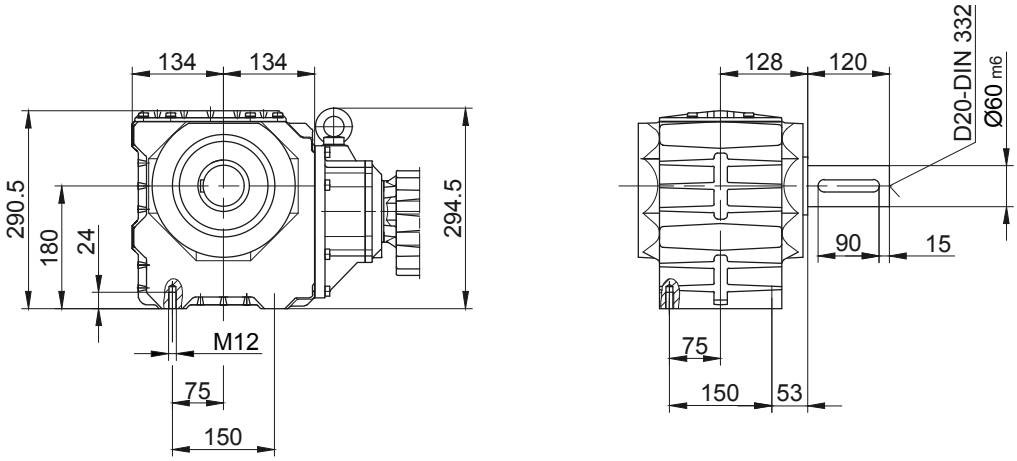

Foot with clearance holes at bottom

Code -1.U/

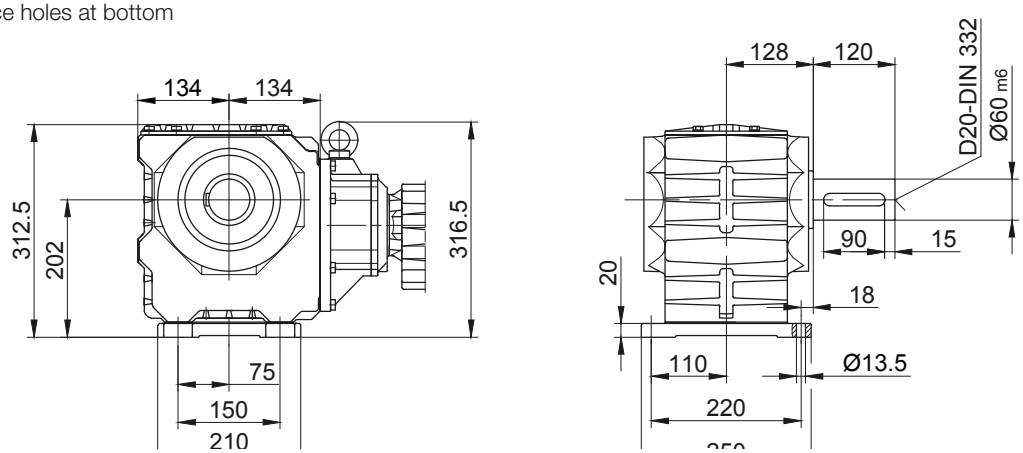

Shrink disc couplings (SSV)

(Code BS10-.5A/...)

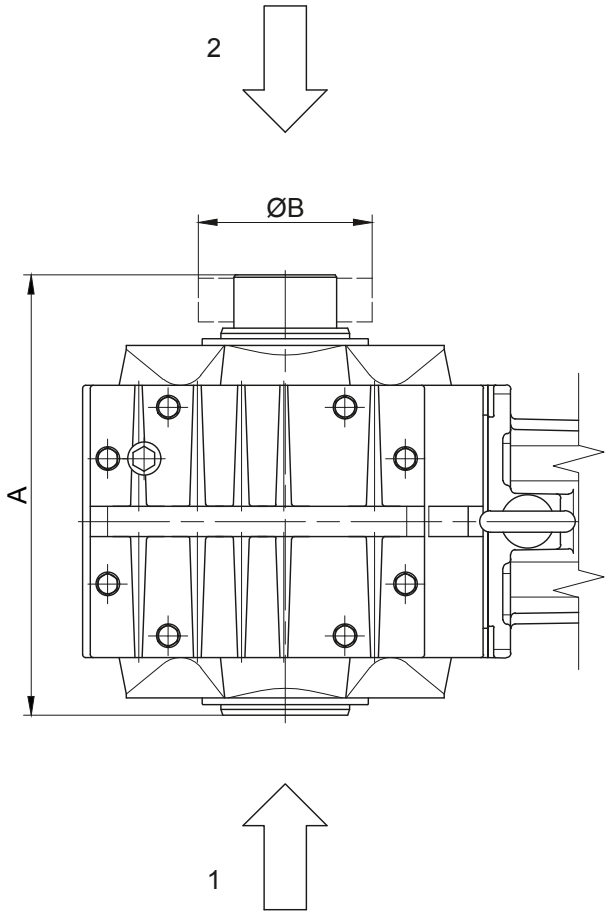

1 Gear side FRONT (V)
2 Gear side REAR (H)

Type	SSV Ringfeder	SSV STÜWE	A	B
BS10	RfN 4161 036x072	HSD 36-22x36	199	72
BS20	RfN 4161 044x080	HSD 44-22x44	239	80
BS30	RfN 4161 050x090	HSD 50-22x50	267	90
BS40	RfN 4161 062x110	HSD 68-22x68	291	115
Dimensions in millimetres (mm)				

Shrink disc couplings with (SSV) cover

(Code BS10-.5A/...)

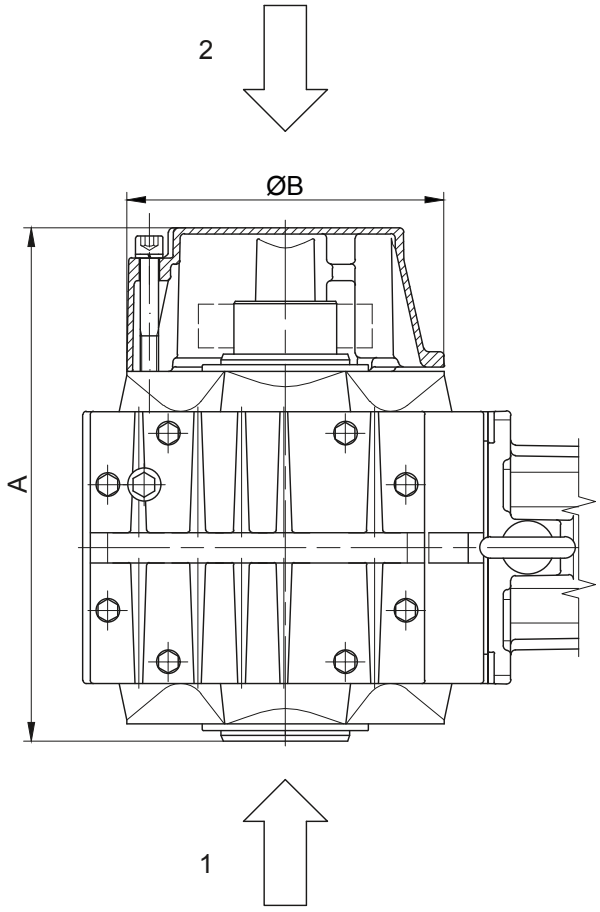

1 Gear side FRONT (V)
2 Gear side REAR (H)

Type	SSV Ringfeder	SSV STÜWE	A	B
BS10	RfN 4161 036x072	HSD 36-22x36	221	120
BS20	RfN 4161 044x080	HSD 44-22x44	286	160
BS30	RfN 4161 050x090	HSD 50-22x50	313	160
BS40	RfN 4161 062x110	HSD 68-22x68	340	210
Dimensions in millimetres (mm)				

The actual gearbox design can vary from the geometry shown. Generate drive specific 3D and 2D geometries under www.BauerCat.com.

BS-series worm-geared motors

Additional Dimension Sheet

Rubber buffer for torque restraint

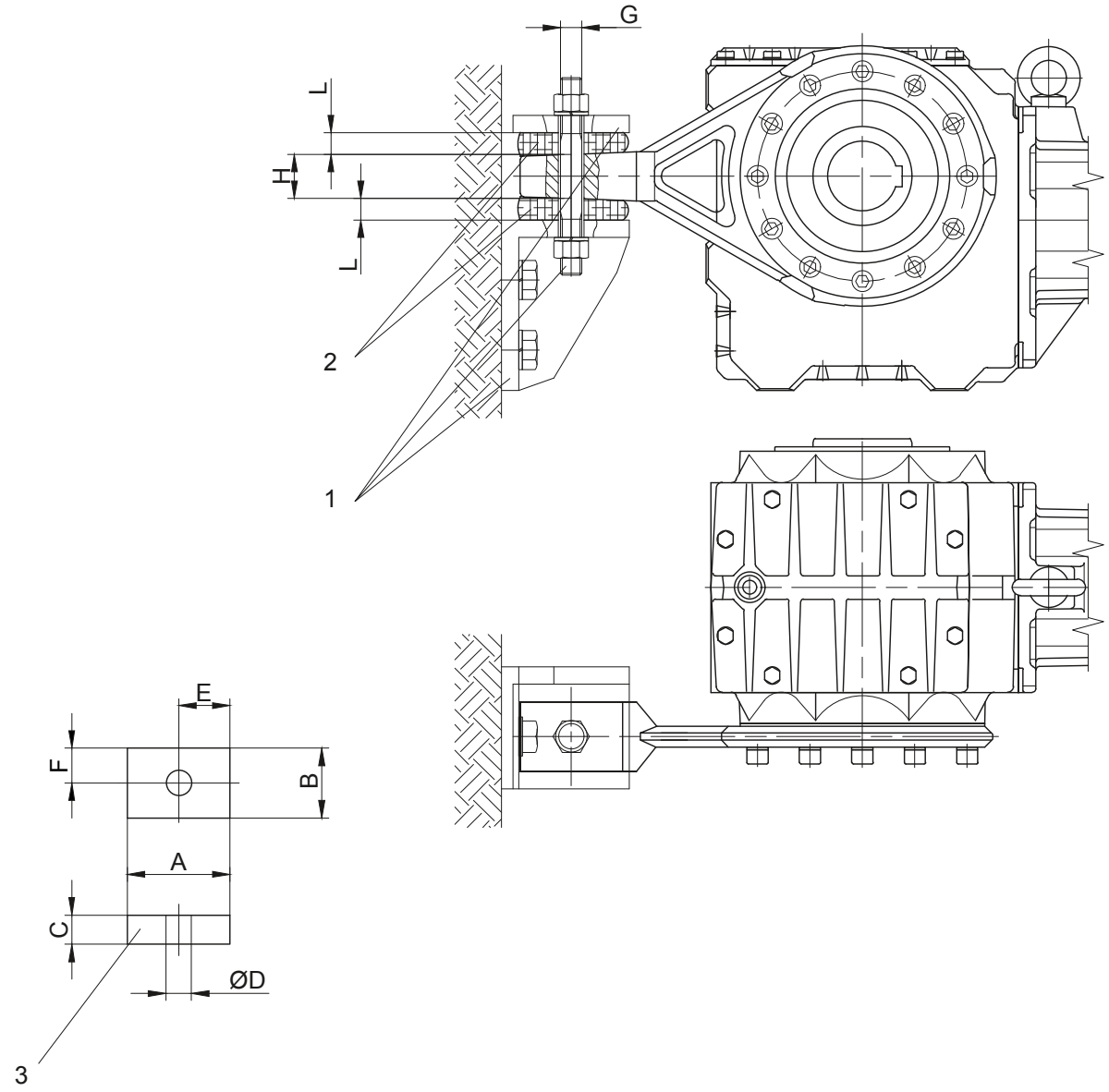

13

1 not included in delivery
2 Rubber buffers pretensioned
3 Rubber buffer - only for BS03-BS40
G maximaler Schraubendurchmesser

Material: Natural rubber
Hardness 50 +/-5 Shore A

Dimensions of the transverse hole:
see dimensioned sketch of the respective shaft mounted gearbox

Gear	Position	A	B	C	D	E	F	G	H	L
BS02	-	-	-	-	-	-	-	M8	6	-
BS03	0	30	30	12	12	15	15	M8	10	10.5
BS04	0	30	30	12	12	15	15	M8	10	10.5
BS06	0	30	30	12	12	15	15	M10	10	10
BS10	1	48	32	15	14	24	16	M10	19	13
BS20	2	63	43	20	14	31.5	21.5	M10	30	17.5
BS30	2	63	43	20	14	31.5	21.5	M10	30	17
BS40	3	88	60	25	22	44	30	M18	38	22
Dimensions in millimetres (mm)										

The actual gearbox design can vary from the geometry shown. Generate drive specific 3D and 2D geometries under www.BauerCat.com.

Position of the torque arm

BS02 / BS03

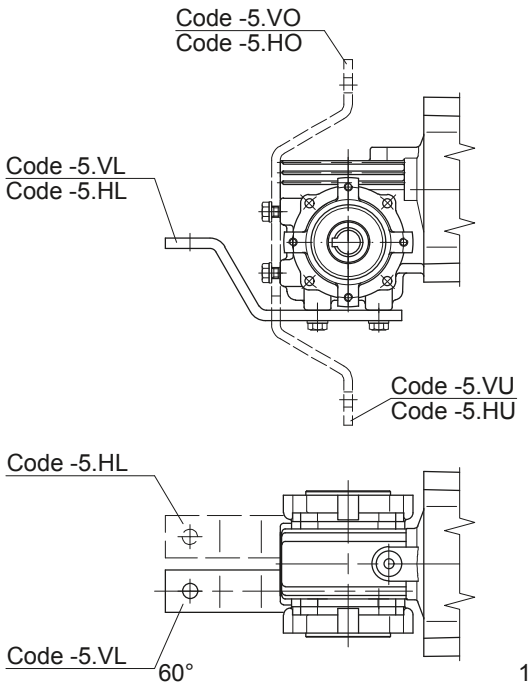

BS04 / BS06

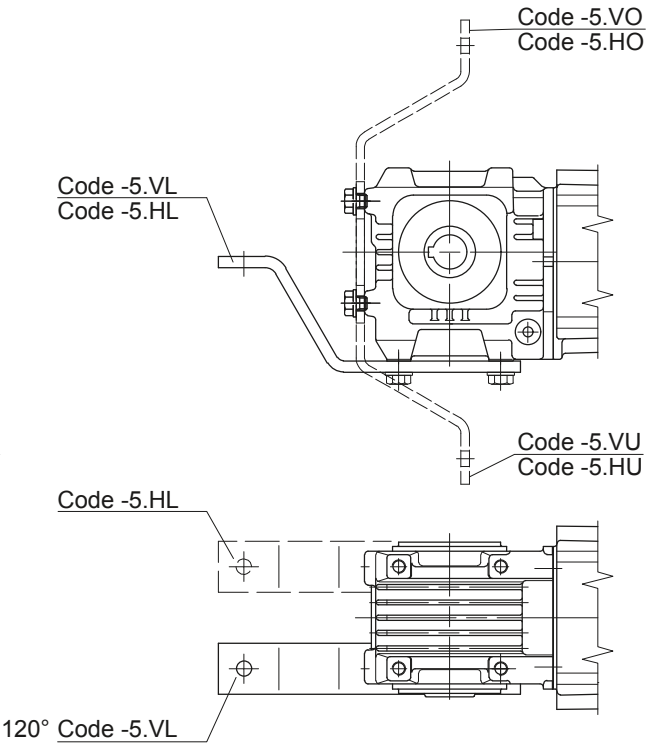

BS10 - BS40

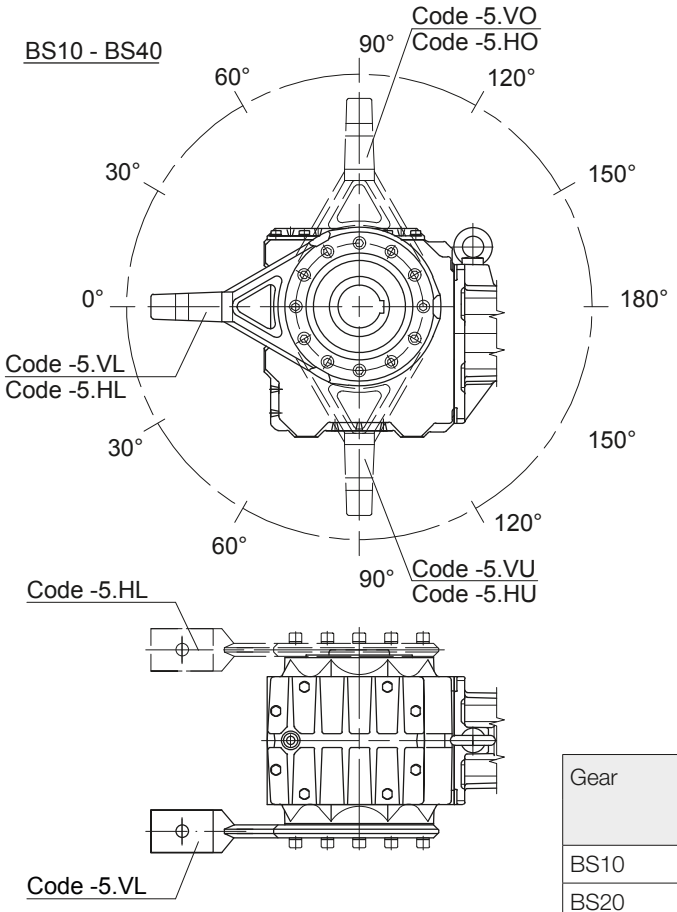

Gear	Position						
	VL/HL	VO/HO/VU/HU					VR/HR
BS10	0°	30°	60°	90°	120°	150°	-
BS20	0°	30°	60°	90°	120°	150°	-
BS30	0°	30°	60°	90°	120°	150°	-
BS40	0°	30°	60°	90°	120°	150°	-

The actual gearbox design can vary from the geometry shown. Generate drive specific 3D and 2D geometries under www.BauerCat.com.

BS-series worm-geared motors

Additional Dimension Sheet

Threaded foot

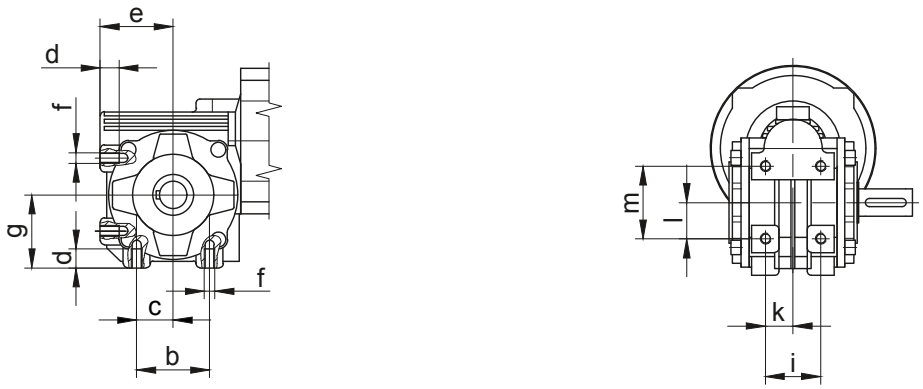

Type	a	b	c	d	e	f	g	-	i	k	l	m
BS02	-	36	18	10	40	M6	40	-	32	16	18	36
BS03	-	54	27	14	54	M8	54	-	41	20.5	27	54

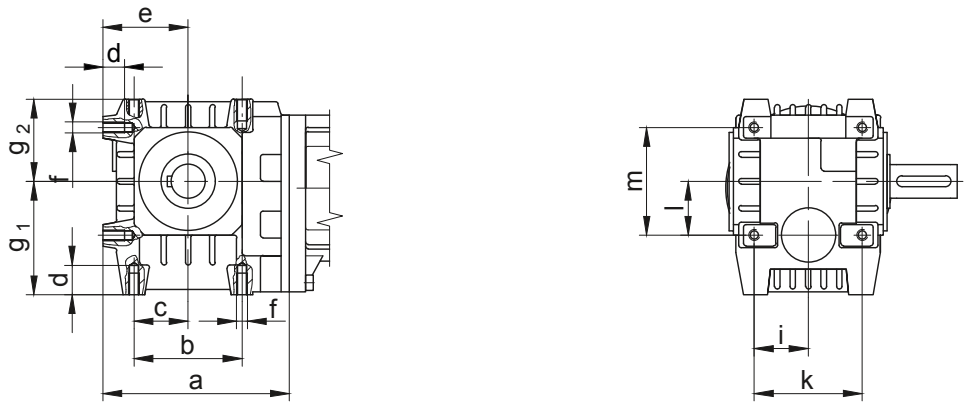

Type	a	b	c	d	e	f	g1	g2	i	k	l	m
BS04	111	60	30	15.5	50	M8	64	49.5	30	60	30	60
BS06	138	80	40	16	63	M8	84	61	40	80	40	80

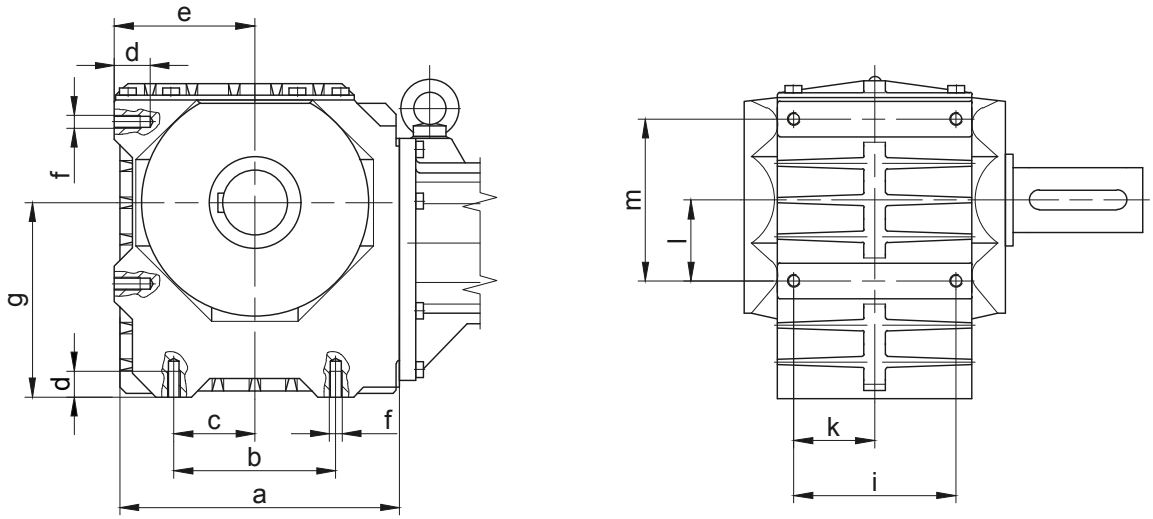

Type	a	b	c	d	e	f	g	-	i	k	l	m
BS10-BS10Z	170	90	45	16	85	M8	105	-	95	47.5	45	90
BS20-BS20Z	202.5	110	55	20	100	M10	125	-	105	52.5	55	110
BS30-BS30Z	228	125	62.5	24	110	M12	150	-	120	60	62.5	125
BS40-BS40Z	264	150	75	24	130	M12	180	-	150	75	75	150

The actual gearbox design can vary from the geometry shown. Generate drive specific 3D and 2D geometries under www.BauerCat.com.

Foot plate, left

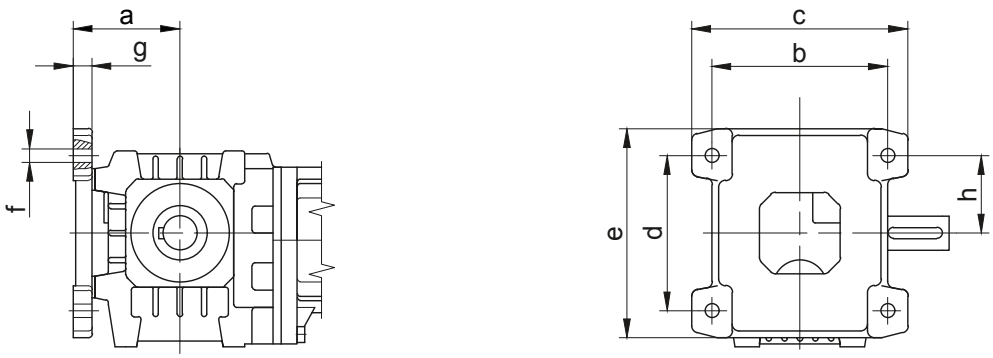

Type	a	b	c	d	e	f	g	h
BS04	68	110	140	90	130	10	15	45
BS06	79	130	160	115	155	10	14	57.5

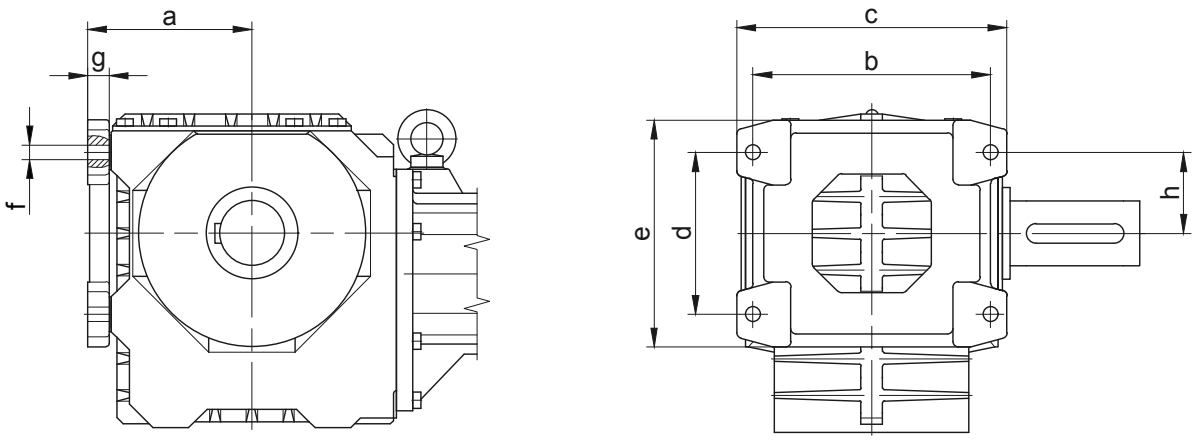

Type	a	b	c	d	e	f	g	h
BS10-BS10Z	103	145	165	90	130	Ø9	16	72.5
BS20-BS20Z	120	165	195	110	160	Ø11	18	55
BS30-BS30Z	132	190	220	125	185	Ø13.5	20	62.5
BS40-BS40Z	152	220	250	150	210	Ø13.5	20	75

BS-series worm-geared motors

Additional Dimension Sheet

Assembly tools for hollow shaft and keyway

Position 1 Shaft

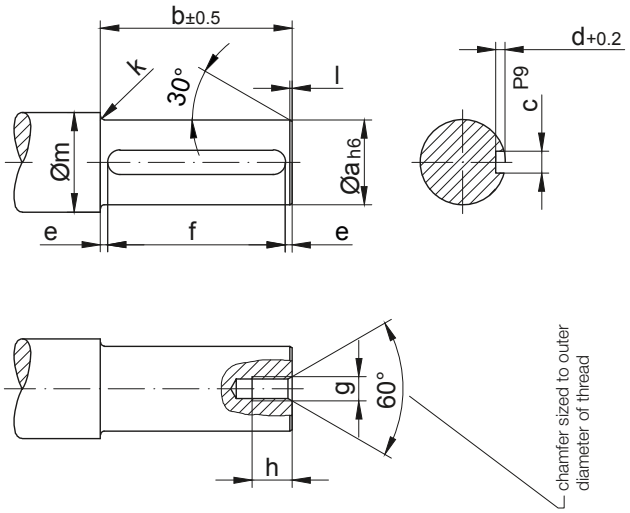

* Position 2 Disc

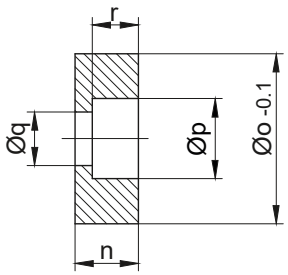

Material: Steel, tensile strength ≥ 470 N/mm²

Type	Dimensions (mm)															
	Postion 1 Shaft											Postion 2 Disc				
	a	b	c	d	e	f	g	h	k	l	m	n	o	p	q	r
BS03	20	75	6	3.5	6	$63^{+0.3}$	M6	16	2	1.5	28	13.5	19.8	11	6.6	6.5
BS04	20	71	6	3.5	7.5	$56^{+0.3}$	M6	16	2	1.5	28	13.5	19.8	11	6.6	6.5
BS06	25	99	8	4	9.5	$80^{+0.3}$	M8	18	2.5	1.5	33	13.5	24.8	15	9	8.5
BS10	30	152	8	4	6	$140^{+0.5}$	M10	20	3	1.5	38	15	29.8	18	11	10
BS20	35	186	10	5	13	$160^{+0.5}$	M10	20	3	1.5	43	16	34.8	18	11	10
BS30	40	212	12	5	6	$200^{+0.5}$	M12	22	3	2	48	18	39.8	20	13.5	12
BS40	60	227	18	7	13.5	$200^{+0.5}$	M20	38	3.5	2	68	24	59.8	33	22	18

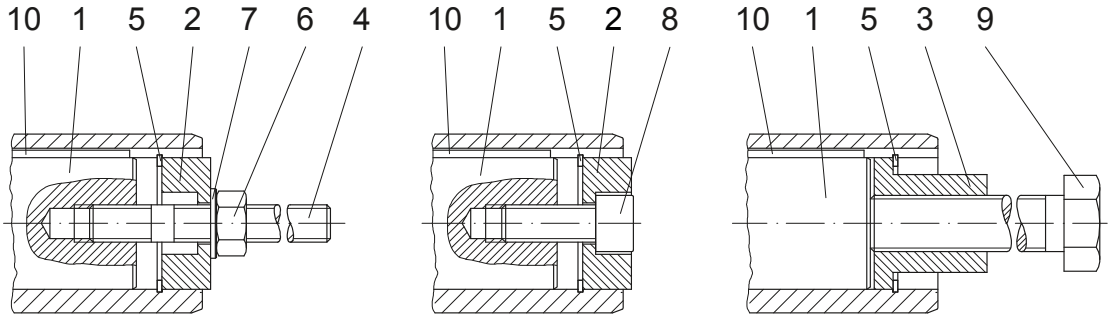

Installation Holding Dismantlement

The parts shown are neccessary for assembly. ONLY * specified parts are enclosed in the assembly kit.
Suitable measures are to be used to secure Bolt Pos. 8 against loosening!

Assembly tools for hollow shaft and keyway

Position 3 Sleeve

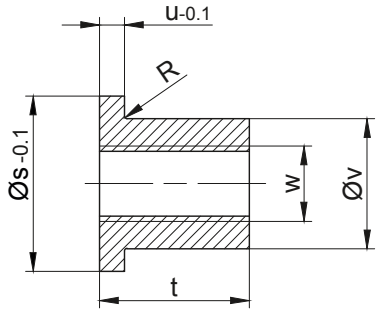

Material: Steel, tensile strength ≥ 470 N/mm²

* Position 4 Stud bolt

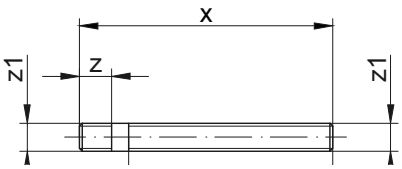

Material: Steel, tensile strength ≥ 1000 N/mm² Thread rolled

Type	Dimensions (mm)										* Retaining ring DIN 472	Hexagon nut DIN 394-8	Disc DIN 125-St	* Filister head screw DIN 912-8.8	Starting torque (Nm)	Hexagon bolt DIN EN 24017-8.8	Key DIN 6885 Width/Height/Length
	Position 3 Sleeve						Position 4 Stud bolt										
	s	t	u	v	w	R	x	y	z	z1	Pos.5	Pos.6	Pos.7	Pos.8		Pos.9	Pos.10
BS03	19.8	24	5	11	M8	-	120	90	18	M6	20x1.0	M6	6.4	M6x25	5	M8x110	A 8x7x63
BS04	19.8	24	5	11	M8	-	120	90	18	M6	20x1.0	M6	6.4	M6x25		M8x110	A 8x7x56
BS06	19.8	24	5	15.4	M12	0.8	150	120	20	M8	25x1.2	M8	8.4	M8x30		M12x140	A 8x7x80
BS10	29.8	28	5	19.8	M14	0.8	210	175	23	M10	30x1.2	M10	10.5	M10x30	8	M14x190	A 8x7x140
BS20	34.9	28	5	23	M14	-	250	215	23	M10	35x1.5	M10	10.5	M10x35		M14x230	A 10x8x160
BS30	39.9	40	6	27.7	M20	0.8	280	240	28	M12	40x1.75	M12	13	M12x35	16	M20x270	A 12x8x200
BS40	59.8	60	6	44	M30	-	320	260	45	M20	60x2.0	M20	21	M20x50	42	M30x310	A 18x11x200

The parts shown are neccessary for assembly. ONLY * specified parts are enclosed in the assembly kit.
Suitable measures are to be used to secure Bolt Pos. 8 against loosening!

13

Optional

Type	Assembly tool „Holding“
BS03	Id.Nr. 4104013
BS04	Id.Nr. 4104013
BS06	Id.Nr. 4103921
BS10	Id.Nr. 4103939
BS20	Id.Nr. 4103947
BS30	Id.Nr. 4103955
BS40	Id.Nr. 4103971

BS-series worm-geared motors

Additional Dimension Sheet

Shaft Cap (VK)

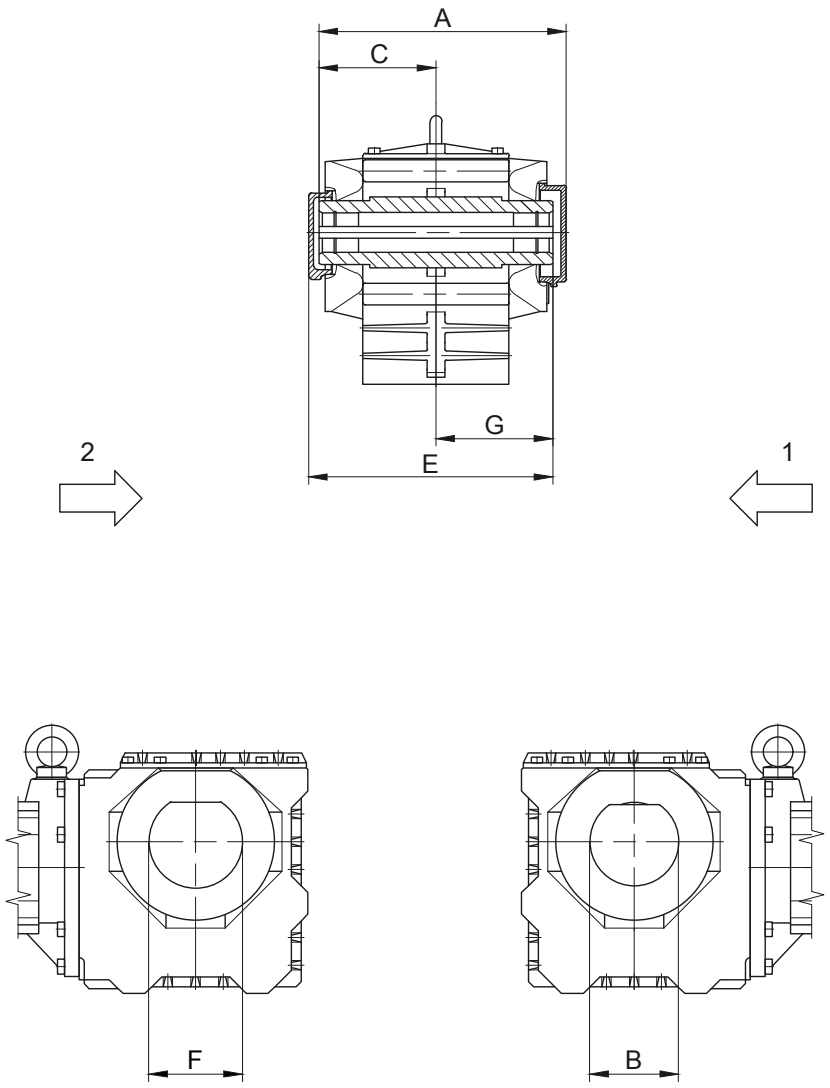

1 Gear side FRONT (V)
2 Gear side REAR (H)

Sealing cap REAR (H)			
Type	A	B	C
BS10	186	68	87
BS30	250.5	100	132
BS40	276	130	128
Dimensions in millimetres (mm)			

Sealing cap FRONT (V)			
Type	E	F	G
BS20	221	78	104.5
Dimensions in millimetres (mm)			

The actual gearbox design can vary from the geometry shown. Generate drive specific 3D and 2D geometries under www.BauerCat.com.

Shaft Cover (VD)

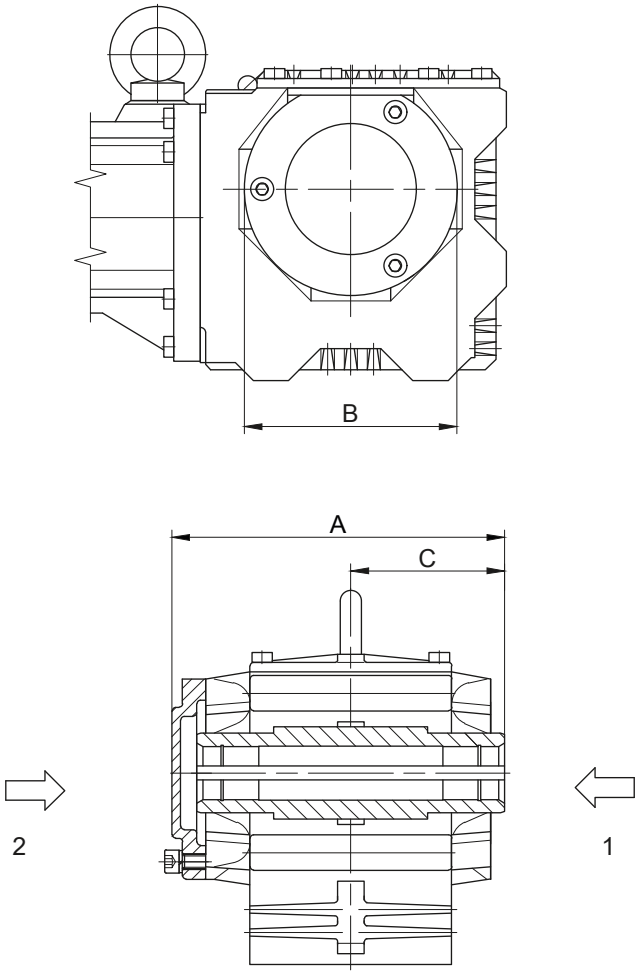

1 Gear side FRONT (V)
2 Gear side REAR (H)

Type	A	B	C
BS04	99.5	68	46.5
BS06	128.5	81	60.5
BS10	185	Ø120	87
BS20	224.5	Ø160	104.5
BS30	251.5	Ø160	118.5
BS40	275	Ø210	128
Dimensions in millimetres (mm)			

The actual gearbox design can vary from the geometry shown. Generate drive specific 3D and 2D geometries under www.BauerCat.com.

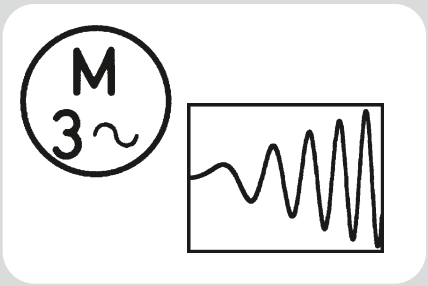

14

Motors

General **681**
ErP Directive 2009/125/EC 681
Regulation (EU) 2019/1781 682
Torques 684
Line voltages 684
Line frequencies 685
Rating plate 685
Terminal box 685
Motor connections 686
Terminal connections for single speed motors 687
Terminal connections for single speed motors with thermal motor protection 688
Terminal connections for pole changing motors in Dahlander connection (Δ/YY or Y/YY) 689
Terminal connections for pole changing motors with two separate windings (Y/Y or Δ/Δ) 690
Plug-and-socket connection 691
Motor protection 692
Thermistors (PTC) 692
Thermostatic protection 693
KTY sensors 694
PT100 sensors 695
Insulation 696
IP – Protection classes 696
Degrees of protection provided by enclosures for electrical equipment 696
Speed of output shaft 697
Duty types as defined by EN 60034 ..... **698**
General 698
Continuous running duty (S1) 698
Short-time duty (S2) 698
Intermittent periodic duty (S3) 699
Intermittent periodic duty with starting (S4) 700
Intermittent periodic duty with electric braking (S5) 701
Continuous-operation periodic duty (S6) 702
Continuous-operation periodic duty with electric braking (S7) 702
Continuous-operation periodic duty with relative load/speed changes (S8) 703
Duty with non-periodic load and speed variations (S9) 703
Duty with discreet constant loads and speeds (S10) 704
Operation with frequency converter **705**
Notes on design 705
Increased torque with reduced duty factor 705
Increased torque with external fan 705
Energy-saving function 706
Regeneration 706
Notes on operation with other-make frequency inverters 706
Technical data **707**
Technical data of the 50 Hz motors **707**
4-pole IE1 motors for continuous operation S1, line frequency 50 Hz 707
4-pole IE2 motors for continuous operation S1, mains frequency 50 Hz 708
4-pole IE3 motors for continuous operation S1, mains frequency 50 Hz 709
4 pole motors for periodic duty S3/S6-75 %, Mains Frequency 50 Hz 710
4 pole motors for periodic duty S3/S6, Mains Frequency 50 Hz ..... 711 ▶

◀ 4/2-pole Δ/YY motors for continuous running duty (S1) and 50 Hz mains frequency 712
8/4-pole Δ/YY motors for continuous running duty (S1) and 50 Hz mains frequency 713
8/2-pole Y/Y motors for intermittent periodic duty S3 25/75 % and 50 Hz mains frequency 714
12/2-pole Y/Y motors for intermittent periodic duty S3 25/75 % and 50 Hz mains frequency 715
Technical data of the 60 Hz motors 716
4-pole IE1 motors for continuous operation S1, mains frequency 60 Hz 716
4-pole IE2 motors for continuous operation S1, mains frequency 60 Hz 717
4-pole IE3 motors for continuous operation S1, mains frequency 60 Hz 718
4-pole motors for intermittent periodic duty (S3/S6 75 %) and 60 Hz mains frequency 719
4-pole motors for intermittent periodic duty (S3/S6) and 60 Hz mains frequency 720
4/2-pole motors Δ/YY for continuous operation S1, line frequency 60 Hz 721
8/4-pole motors Δ/YY for continuous operation S1, line frequency 60 Hz 722
8/2-pole Y/Y motors for intermittent periodic duty S3 25/75 % and 60 Hz mains frequency 723
12/2-pole motors Y/Y for intermittent periodic duty S3-25/75 %, line frequency 60 Hz 724
Operation with frequency converter, 50 Hz 726
IE1 Motor torques for frequency-converter range 5 Hz - 70 Hz, line frequency 50 Hz 726
IE1 Motor torques for frequency-converter range 5 Hz - 100 Hz, line frequency 50 Hz 727
IE2 Motor torques for frequency-converter range 5 Hz - 70 Hz, line frequency 50 Hz 728
IE2 Motor torques for frequency-converter range 5 Hz - 100 Hz, line frequency 50 Hz 729
IE3 Motor torques for frequency-converter range 5 Hz - 70 Hz. line frequency 50 Hz 730
IE3 Motor torques for frequency-converter range 5 Hz - 100 Hz, line frequency 50 Hz 731
Operation with frequency converter, 60 Hz 732
IE1 Motor torques for frequency-converter range 6 Hz - 84 Hz. line frequency 60 Hz 732
IE1 Motor torques for frequency-converter range 6 Hz - 120 Hz. line frequency 60 Hz 733
IE2 Motor torques for frequency-converter range 5 Hz - 80 Hz, line frequency 60 Hz 734
IE2 Motor torques for frequency-converter range 5 Hz - 120 Hz. line frequency 60 Hz 735
IE3 Motor torques for frequency-converter range 5 Hz - 80 Hz, line frequency 60 Hz 736
IE3 Motor torques for frequency-converter range 5 Hz - 120 Hz, line frequency 60 Hz 737

ErP Directive 2009/125/EC

Directive 2009/125/EC of the European Parliament and the Council, issued in 2009, specifies requirements for the environmentally responsible design of energy-related products (ErPs). In November 2009 it superseded Directive 2005/32/EC, which formed the framework for requirements for the environmentally responsible design of energy-using products (EuPs). This change has no effect on already proclaimed implementation measures.

Objectives

The ErP Directive has several objectives:

1. **Mitigating the environmental impact of energy-using products**
   This objective is intended to be achieved by the documentation and labelling of products, by regulations for inspection, and by the formulation of individual requirements in implementation measures. As the entire product life cycle is taken into consideration, action must be taken as early as the design phase.

2. **Climate protection**
   Achievement of the EU climate protection objectives is to be supported. This can be implemented by reducing energy consumption and the emission of global warming gasses in the production, operation and disposal of energy-using products.

3. **Harmonised legislation**
   The directive creates a framework for the European regulation of environmental design requirements. This avoids trade impediments resulting from differences in national regulations. This can be achieved by means of the proclamation of legally binding implementation measures for the entire Community and protection of free trade in goods against further-reaching regulations of the Member States.

Regulation (EU) 2019/1781

To establish eco-design requirements for electric motors and variable speed drives pursuant to Directive 2009/125/EC

Valid from: 01.07.2021
- Frequency converter 0.12 - 1,000 kW: IE2
- 3-phase motors 0.12 < 0.75 kW/2.4, 6 or 8 poles: IE2 (Excluded: Ex eb (DXE))
- 3-phase motors 0.75 - 1,000 kW/2.4, 6 or 8 poles: IE3 (Excluded: Ex eb (DXE)

ATTENTION:
Brake motors are no longer exempt!!
IE2 for inverter operation is no longer permitted!!!

Valid from: 01.07.2023
- 1-phase motors ≥ 0.12 kW: IE2
- Ex eb (DXE) Motors ≥ 0.12 kW: IE2
- 3-phase motors 75 kW – 200 kW 2. 4 or 6 pole: IE4
  (Exempt: brake motor and all explosion-proof motors)

Scope
Induction electric motors without brushes, commutators, slip rings or electrical connections to the rotor, rated for operation on a 50 Hz, 60 Hz or 50/60 Hz sinusoidal voltage and having the following characteristics:
- 2-, 4-, 6- and 8-pole motors
- Rated power PN between 0.12 kW and 1000 kW
- Rated voltage UN over 50 V up to and including 1,000 V
- are designed for continuous operation (S1, S3 ≥ 80 % ED, S6 ≥ 80 % ED) and are intended for direct mains operation

Which engines are excluded from the scheme?

- Motors designed to be operated completely immersed in a liquid
- Motors fully integrated into a product (e.g. a gearbox, a pump, a fan or a compressor) whose energy efficiency cannot be measured independently of that product
- Motors with integrated frequency converter (compact drives) whose energy efficiency cannot be tested independently of the frequency converter
- Motors specifically designed and specified to operate exclusively
  - at altitudes exceeding 4000 m above sea-level
  - at ambient temperatures above 60 °C
  - at ambient temperatures below -30 °C
- Motors with integrated brake, which is an integral part of the inner motor construction and cannot be removed or supplied from a separate power source when testing the motor efficiency.
- Motors specifically qualified for the safety of nuclear installations, as defined in Article 3 of Council Directive 2009/71/EURATOM
- Motors with mechanical commutators
- Totally enclosed Non-Ventilated motors (TENV)
- Engines from the respective scope of application of the two deadlines 01.07.2021 or 01.07.2023, which were placed on the market before these deadlines, may continue to be placed on the market until 30.06.2029 as 1:1 replacements and may be specifically marketed as such
- Multi-speed motors, i.e. pole-changing motors
- Motors designed specifically for the traction of electric vehicles
- Motors in portable equipment whose weight is supported by hand during operation
- Motors in hand-held mobile equipment which are moved during operation
- Motors in cordless or battery-operated equipment
- Motors for underground mining (mines)

Method for determining the motor efficiency according to IEC 60034-2-1

Individual loss procedure
Additional losses according to residual loss method
Low measurement uncertainty

Bauer geared motors for connection to three-phase supply are supplied with specially designed induction motors. This design ensures maximum operating safety with high breakaway torque and minimum starting current.

The torque/speed characteristic is largely free of torque dips. Torque is optimised to suit requirements and application parameters. See “www.bauergears.com” for more information.

Torques

The torques as stated in the selection tables are fully available at the output shaft. These figures apply for continuous operation (S1-100 %) at a maximum ambient temperature of 40 °C and at site elevations up to 1000 m above sea level. Drives for higher ambient temperatures and site elevations are available on request. Gear efficiencies, which are lower than the usual values for spur gears, are taken into account in the torques listed in the selection tables.

Line voltages

BAUER motors are available as standard for the following three-phase line voltages:

Motor size	Standard voltages:
D..04LA4 - D09X.4	220 V Δ/ 380 V Y 50 Hz
0.06 - 2.2 kW	230 V Δ**/400 V Y 50 Hz***
	240 V Δ/415 V Y 50 Hz**
	440 V Y/60 Hz 460 V Y/60 Hz
from D..11SA4	220 V Δ/ 380 V Y 50 Hz
from 3.0 kW	230 V Δ/ 400 V Y 50 Hz
	240 V Δ/ 415 V Y 50 Hz**
	440 V Y/60 Hz460 V Y/60 Hz
	380 V Δ/ 660 V Y 50 Hz
	400 V Δ/ 690 V Y**50 Hz***
	415 V Δ/50 Hz**
	440 V Δ/ 60 Hz
	460 V Δ/ 60 Hz

*Voltage recommended world-wide by IEC 38 and in Europe by CENELEC.
**= Insulation Class F is necessary.

Designs for other voltages available on request and at extra cost.

Unless otherwise specified, motors for operation in conjunction with frequency converters with a 50 or 60 Hz frequency have a Y-circuit to optimise operating noise and winding load.

Unless otherwise stated, the tolerance for the rated voltage is +/- 5 %, in accordance with IEC 60034-1.

The D..04.. to D..18.. motors in 4 pole design can be operated within a tolerance of +/- 10 % of the rated voltage (400 V 50 Hz).

Line frequencies

All motors are available with the same power ratings for either 50 or 60 Hz. Increased power models are available on request.

Rating plate

Bauer geared motors are supplied with a corrosion-proof rating plate as standard. The standard rating plate is made of special plastic tried and tested in many years of practical use and approved for hazardous areas by the Physikalisch-Technische-Bundesanstalt (PTB).



Terminal box

The cables of motors with and without brakes can be introduced into the motor terminal box from side A or side C.

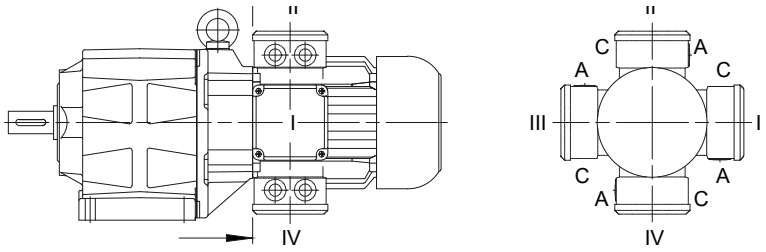

The standard position for the motor terminal box is shown in the dimensional drawings for the geared motors (see chapter 10,11,12 and 13). The terminal box can be installed at any of 3 other positions on request, if on-site space is restricted. The 4 possible positions are 90° offsets around the axis of the motor (dimensional drawing and designation for standard terminal box, see chapter 16 “Dimensional drawing standard terminal box”).

Cast-on terminal boxes (KAG) are supplied with knock out entries with metric nut for cable gland. Screw- on terminal boxes (TBI...4 are supplied with a metric screw thread as standard.

Motor connections

The electrical connection of gear motors is time consuming and creates costs, which cannot be neglected both during initial installation and in service cases. These costs are reduced considerably by the use of BAUER Gear Motors, have CAGE CLAMP® connection technology instead of the conventional terminal block – and that without extra charge.

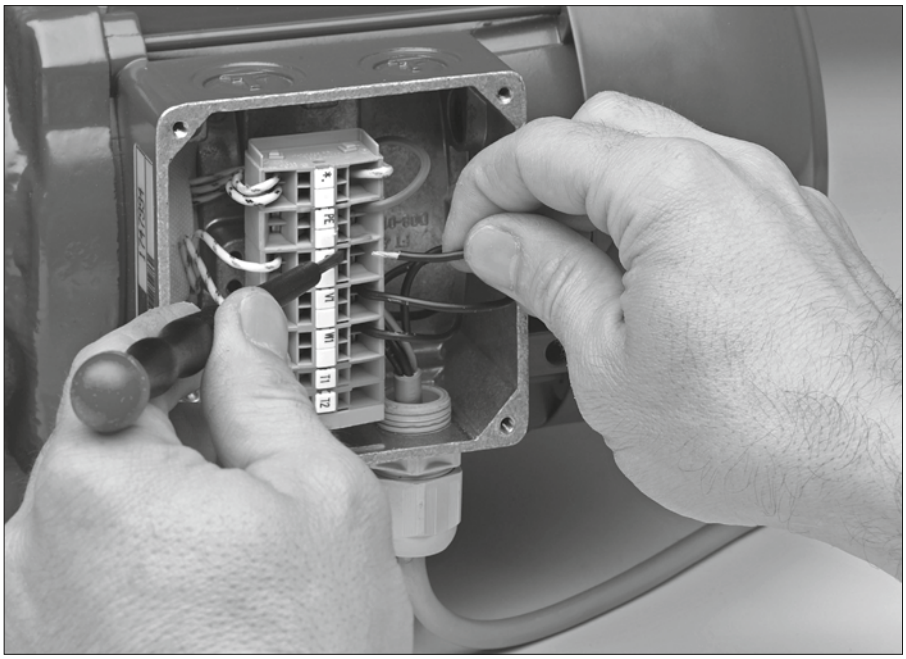

What are the advantages for you ?

Cost reduction during connection
Public timing test have confirmed, that the electrical connection of a cable by means of CAGE CLAMP® technology saves up to 75 % working time compared with the classic screw connection.

Simple Handling
Cable connection from the top, very easily accessible: The CAGE CLAMP® spring is pressed, and the cable inserted from the front, i.e. in the field of vision of the installation engineer.

Which cable core diameters ?
Suitable for all copper wires from 0.5 mm² to 25 mm².

Cost saving in material and tooling
- multicore cable ends, cable eyes or cable ring eyes are no longer needed
- Tools such as crimping pliers are no longer needed
- Inadvertently over tightening or breaking of the terminal bolts and the procurement of a new terminal block belong in the past.
- Searching and procurement of nuts and washers for the terminal blocks, which have fallen down, also belongs in the past.

Vibration and shock resistant
Vibration and shock result neither in conductor damage nor in a measurable contact interruption. The connection is service free.

Type of conductors
The CAGE CLAMP®-connector can clamp fine stranded, stranded and solid cores wires.

Terminal connections for single speed motors

Standard connection of three phase motors via CAGE CLAMP®.
D..04 - D..09

Connection of three-phase motor via CAGE CLAMP®

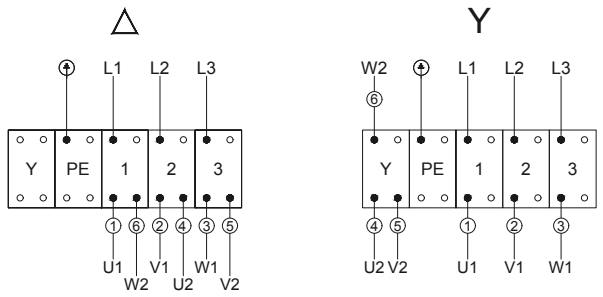

	IEC/EN 60034-8	NEMA MG 1	Colour
Supply lines	L1 L2 L3	L1 L2 L3	
Motor winding	U1 V1 W1 U2 V2 W2	T1 T2 T3 T4 T5 T6	black blue brown yellow red violet
Δ	Connections for the low rated voltage (e.g.: 230V)		
Y	Connections for the high rated voltage (e.g.: 400V)		

D..11 - D..18

Connection of three-phase motor via CAGE CLAMP®

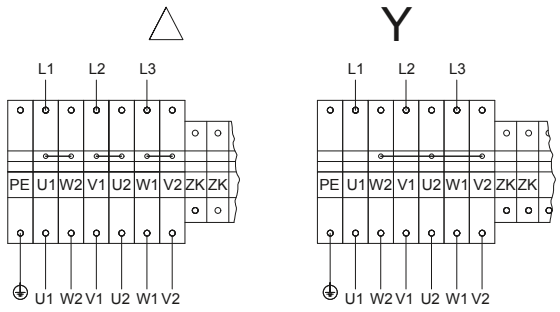

	IEC/EN 60034-8	NEMA MG 1	Colour
Supply lines	L1 L2 L3	L1 L2 L3	
Motor winding	U1 V1 W1 U2 V2 W2	T1 T2 T3 T4 T5 T6	black blue brown yellow red violet
Δ	Connections for the low rated voltage (e.g.: 230V)		
Y	Connections for the high rated voltage (e.g.: 400V)		
ZK	Optimal additional connection		

Terminal connections for single speed motors with thermal motor protection

Standard connection of three phase motors with thermal motor protection via CAGE CLAMP®.
D..04.. - D..09..

Connection of three-phase motor and thermal motor protection via CAGE CLAMP®

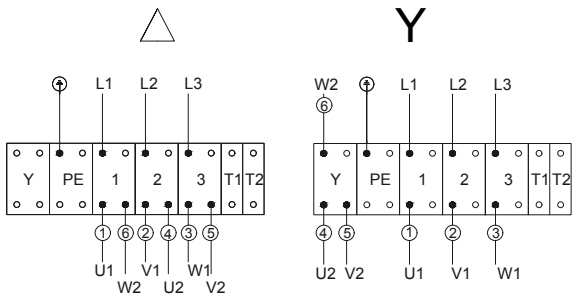

	IEC/EN 60034-8	NEMA MG 1	Colour
Supply lines	L1 L2 L3	L1 L2 L3	
Motor winding	U1 V1 W1 U2 V2 W2	T1 T2 T3 T4 T5 T6	black blue brown yellow red violet
Δ	Schaltung für niedrige Nennspannung (z. B.: 230V)		
Y	Schaltung für hohe Nennspannung (z. B.: 400V)		
T1 T2	Thermal motor protection		

D..11 - D..18

Connection of three-phase motor via CAGE CLAMP®

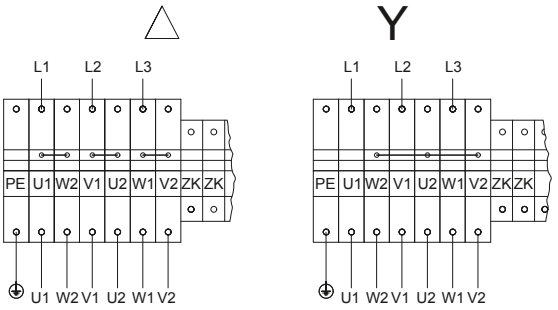

	IEC/EN 60034-8	NEMA MG 1	Colour
Supply lines	L1 L2 L3	L1 L2 L3	
Motor winding	U1 V1 W1 U2 V2 W2	T1 T2 T3 T4 T5 T6	black blue brown yellow red violet
Δ	Connections for the low rated voltage (e.g.: 230V)		
Y	Connections for the high rated voltage (e.g.: 400V)		
ZK	Optimal additional connection		

Terminal connections for pole changing motors in Dahlander connection (Δ/YY or Y/YY)

Standard connection of three phase motors without motor protection via CAGE CLAMP®.
D..04.. - D..09..

Motor 2 Speeds, Dhalander connection D/YY or Y/YY
(T1-T2 Thermal Motor protection optional)

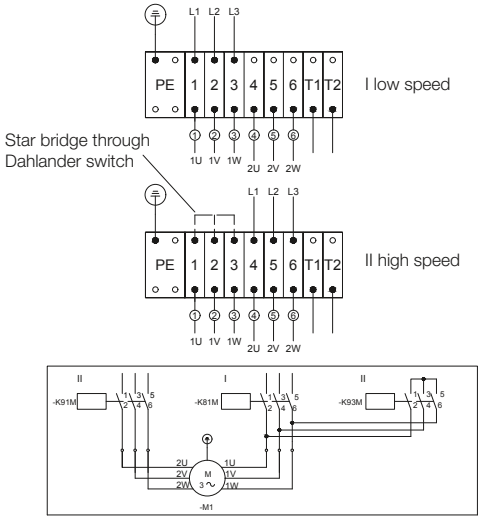

	IEC/EN 60034-8	NEMA MG 1	Colour
Supply lines	L1	L1	
	L2	L2	
	L3	L3	
Motor winding	1U	T1	black
	1V	T2	blue
	1W	T3	brown
	2U	T5	yellow
	2V	T6	red
	2W	T4	violet
I	low speed		
II	high speed		

D..11.. - D..18..

Connection of three phase motor via CAGE CLAMP®
Pole changing for 2 speeds; Dahlander connection Δ/ YY

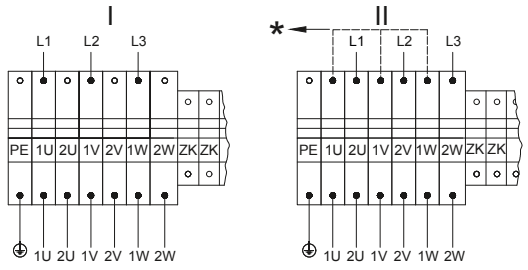

	IEC/EN 60034-8	NEMA MG 1	Colour
Supply lines	L1	L1	
	L2	L2	
	L3	L3	
Motor winding	1U	T1	black
	1V	T2	blue
	1W	T3	brown
	2U	T4	yellow
	2V	T5	red
	2W	T6	violet
I	low speed		
II	high speed		
ZK	Optimal additional connection		
*	Star point over Dahlander Relay		

Terminal connections for pole changing motors with two separate windings (Y/Y or Δ/Δ)

Standard connection of three phase motors with motor protection via CAGE CLAMP®.
D..04.. - D..09..

Motor pole-changing
2 speeds, 2 windings: Y/Y or Δ/Δ
(T1-T2 thermal motor protection optional)

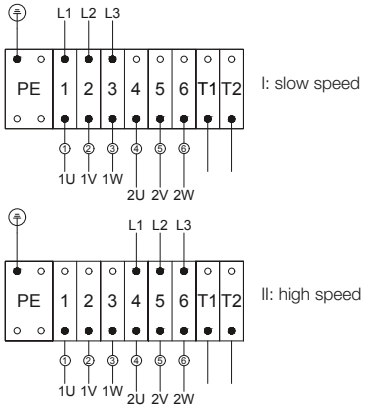

	IEC/EN 60034-8	NEMA MG 1	Colour
Supply lines	L1	L1	
	L2	L2	
	L3	L3	
Motor winding	1U	T1	black
	1V	T2	blue
	1W	T3	brown
	2U	T11	yellow
	2V	T12	red
	2W	T13	violet
I	low speed		
II	high speed		
T1 T2	Thermal motor protection		

D..11.. - D..18..

Connection of three phase motor via CAGE CLAMP®
Motor pole-changing 2 speeds, 2 windings; Y/Y or Δ/Δ

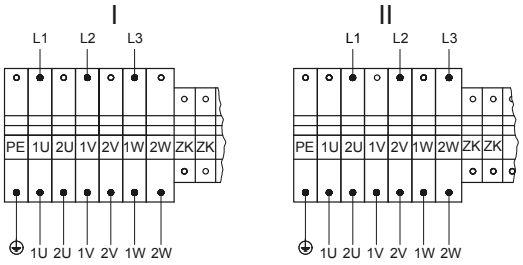

	IEC/EN 60034-8	NEMA MG 1	Colour
Supply lines	L1	L1	
	L2	L2	
	L3	L3	
Motor winding	1U	T1	black
	1V	T2	blue
	1W	T3	brown
	2U	T4	yellow
	2V	T5	red
	2W	T6	violet
I	low speed		
II	high speed		
ZK	Optimal additional connection		

Plug-and-socket connection

D..06.. to D..16.. Bauer motors are available with plug-in motor connection. The socket housing is mounted on the fan-cowl side of the terminal box as standard. This layout minimises the protrusion caused by the plug.
The standard plug-and-socket type connection incorporates the attachment housing, pin insert and cover. Grommet-type housings and jack inserts are available on request at extra cost. Pin assignments on request (dimensional drawing, see chapter 17 “Dimensional drawing, plug-connector terminal box”).

A design with single clamp lever according to the DESINA regulation of the „Verbandes Deutscher Werkzeugmaschinenhersteller“ (VDW) is also available.

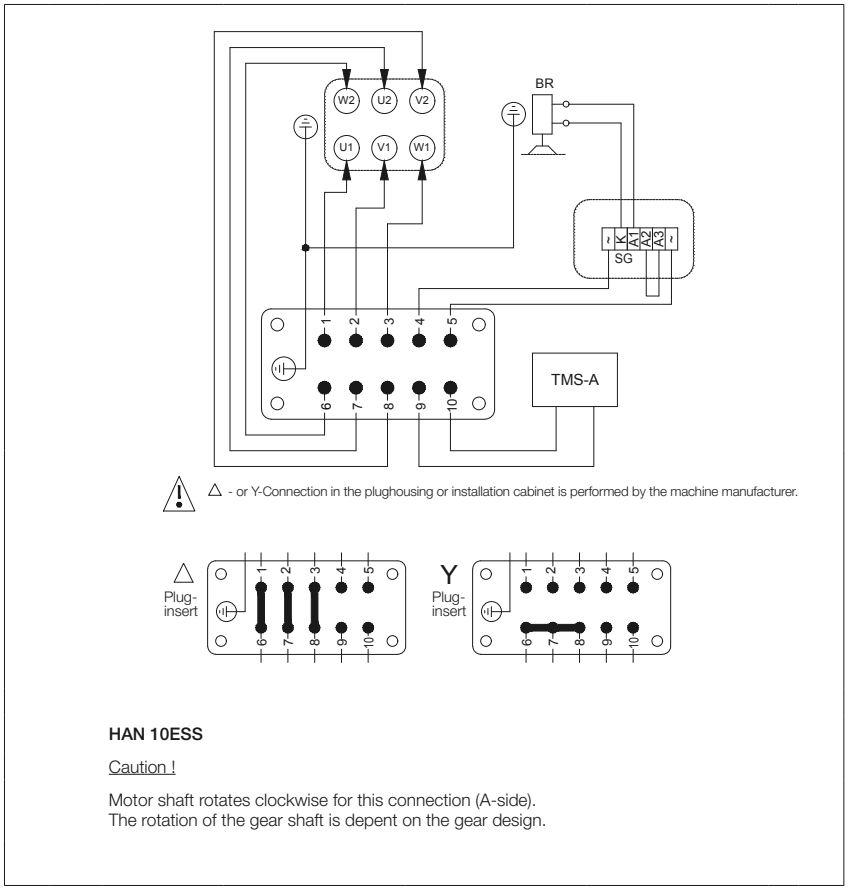

The motors are also available with a low-cost round plug connector as an alternative. This is fitted at the factory in the standard terminal box and is also suitable for brake connection, thermistors and thermostats. Additional information on request.

Bauer motors from D..08.. with motor-mounted brake are also available with plug-in brake connection. This means that if it requires attention, the brake can be replaced on site with no loss of time.

Motor protection

Each geared motor requires a current-dependent motor protection switch or an overcurrent relay with thermal delay in the switchgear to protect the motor windings. The rated motor currents required for settings are stated in the order acknowledgment. Thermal protection for the winding is recommended as an additional safety measure for special operating conditions (short-time or intermittent periodic duty, high switching frequency, severe voltage fluctuations or restricted cooling) and for operation in conjunction with a frequency converter.

Thermistors (PTC)

Thermistors are temperature-dependent resistors which are fitted in each phase winding. In conjunction with a motor protection switch, they ensure optimum protection for the winding in the event of rapid temperature rise. Characteristic to DIN 44081 and “Mark A” to IEC 34-11-2. Thermistors are available for all motors at extra cost. The requisite monitoring device is not included in the scope of supply.

Thermal motor protection with PTC-thermistors

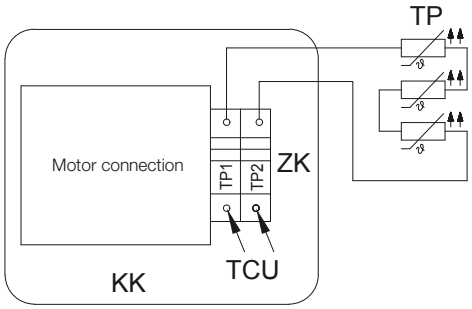

KK	Terminal box
ZK	Additional terminals
TP	PTC-thermistors
TCU	Connection of Thermistor control unit EN 60947 Max. permissible testing voltage 2.5 VDC/thermistor in case of Ex with auth. certificate: PTB 3.53-PTC A

The location of the additional terminals in the drawing is not necessarily identical with the actual arrangement.

Thermostatic protection

Bimetal switches are used for slow-acting, independent temperature monitoring and are embedded in each winding section of the motor.
The bimetal disc is sized such that when the temperature rises above a specific, previously set value, the disc suddenly snaps from a convex state to a concave state and the contact moves vertically away from the contact plate. In this state the switch is either open (normally closed switch) or closed (normally open switch). A significant temperature change is necessary to allow the bimetal disc to independently snap back to its initial position. When it does, the switch is again closed (normally closed switch) or open (normally open switch). Thermal protection switches are available for all motors at additional cost. For technical reasons, this option is not recommended for large motors (D..11.. to D..18..).

Thermal motor protection with thermostats
(with normally closed contacts)

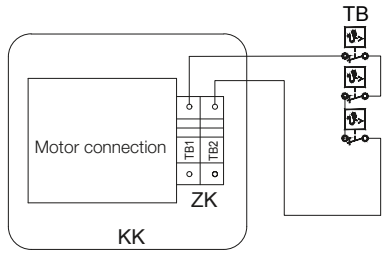

KK	Terminal box
ZK	Additional terminals
TB	Thermostats with normally closed contacts max. 250VAC 1.6A

The location of the additional terminals in the drawing is not necessarily identical with the actual arrangement.

Thermal motor protection with thermostats
(with normally opened contacts)

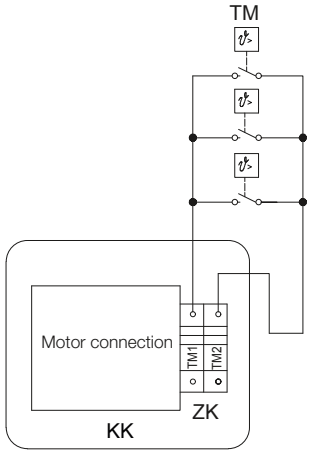

KK	Terminal box
ZK	Additional terminals
TB	Thermostats with normally closed contacts max. 250VAC 1.6A

The location of the additional terminals in the drawing is not necessarily identical with the actual arrangement.

KTY sensors

KTY sensors with heat-shrink insulation can be used to measure and monitor critical surface temperatures and internal temperatures of motors and machines. These sensors are suitable for use in harsh industrial environments in all places where accurate measurements with a single sensor are required. KTY sensors are available for all types of motors at additional cost.

Type 84-130SH: primarily installed in motors that are operated with Siemens frequency converters.

Working principle: KTY sensors are temperature-dependent components. The resistance of the KTY sensor increases when its temperature rises. The characteristic curve is nearly linear in the sensor‘s measuring range; the reference resistance (at 100 °C) is 970 to 1030 ohms.

Resistance temperature sensor KTY84-130SH

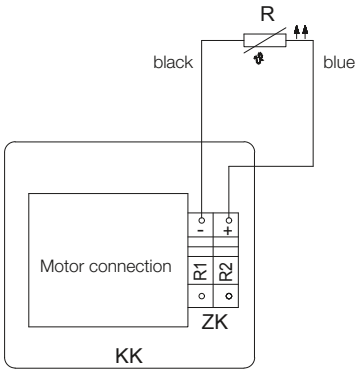

KK	Terminal box
ZK	Additional terminals
R	Resistance temperature sensor

The location of the additional terminals in the drawing is not necessarily identical with the actual arrangement.

PT100 sensors

Precise monitoring of motor temperatures is necessary in many fields of industry. Pt100 sensors feature high accuracy, short response time and long-term stability, and they are suitable for use over a wide range of temperatures. Pt100 sensors are available for all motor types at additional cost.

Specifications
Nominal resistance: 100 Ω at 0 °C

The resistance characteristics are specified in EN 60751.

Resistance temperature sensor PT 100

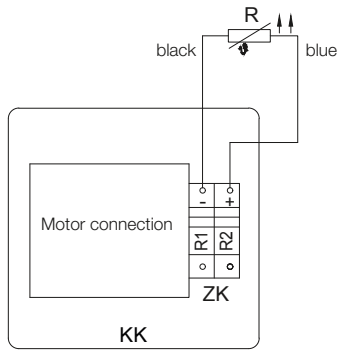

KK	Terminal box
ZK	Additional terminals
R	Resistance temperature sensor

The location of the additional terminals in the drawing is not necessarily identical with the actual arrangement.

Insulation

The gearmotors described in the selection tables of this catalogue with the motor sizes D..04.., D..05.., D..06.., D..08.., D..09S and D..09L are executed in insulation class B. Temperature class F is available on request at extra cost.

4-pole motors D..07.. and D..09XA4 (2.2 kW) to D..18XA4 (30 kW) and all multi-speed motors are rated in Temperature Class F as standard.
Insulation Class F bestows the winding a multiple protection against high humidity, acidic gases and heavy tropical influences while making the same shock resistant and more resistant to heat. Protection against insects (termites) is guaranteed through the complete enclosure (IP65) as long as the mains cables are encased in metal.

IP – Protection classes

Bauer motors from motor size D..06.. are manufactured to IP65 degree of protection as standard. Motor sizes D..04.. and D..05.. have a smooth motor housing of IP54. Higher IP protection classes on request.

Degrees of protection provided by enclosures for electrical equipment

First IP - code number after DIN EN 60529					Second IP - code number after DIN EN 60529		
	Protection against penetration of solid foreign bodies		Protection of persons against access to hazardous parts with			Protection against penetration of moisture or water	
4	diameter > = 1.0 mm	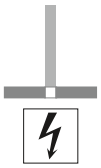	Wire		4	Splash water	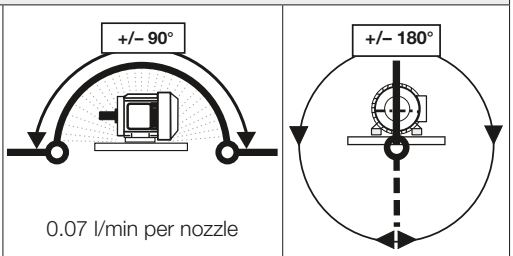 0.07 l/min per nozzle
5	Dustproof	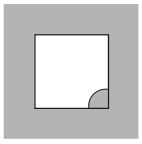			5	Jet water	qv = 12,5 l/min p ~ 0.3 bar t = 1 min/m² > 3 min 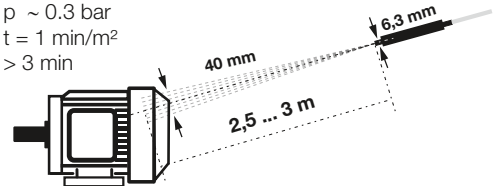
6	Dust tight	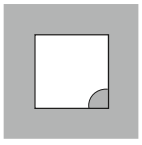			6	Strong Jet water	qv = 100 l/min p ~ 1 bar t = 1 min/m² > 3 min 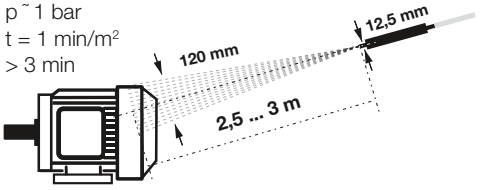
					7	Temporary Submerge	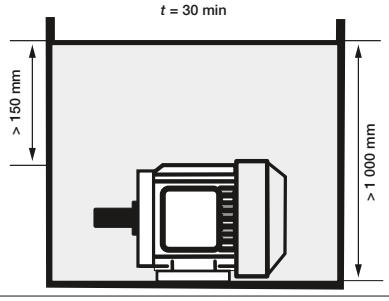

First IP - code number after DIN EN 60529		Second IP - code number after DIN EN 60529		
Protection against penetration of solid foreign bodies	Protection of persons against access to hazardous parts with		Protection against penetration of moisture or water	
		8	Permanent Submerge	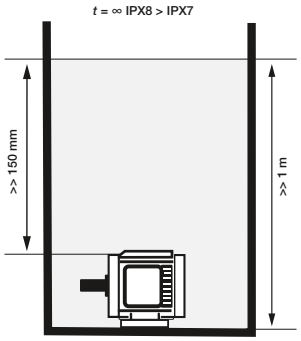 x = 5 m (Standard) or by agreement
		9 (9K= DIN 40050-9)	High pressure and high jet water temperature	Housing >= 250 mm t = 1 min /m² > 3 min Water temperature (80 +- 5) °C 15 l/min, 100 bar Distance (175 +- 25) mm 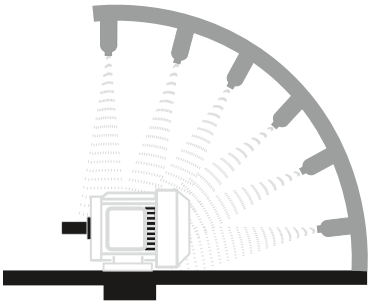

Speed of output shaft

The rated speeds in the selection tables are guidelines for load at rated power. Speed can vary depending on degree of load and temperature (particularly in the case of relatively small motors). Combination gear units for lower speeds are available on request.

Motors

Duty types as defined by EN 60034

General

Aside from special drives (such as lifting equipment), standard motors are always designed for continuous running duty. If the drive is operated with frequent on/off cycles, it may be necessary to select a larger motor with a special design. On the other hand, with pronounced short-time duty it is often possible to select a smaller model. **For this reason, it is technically necessary or economically advantageous to inform the motor manufacturer of any duty type that differs from continuous running.**

Continuous running duty (S1)

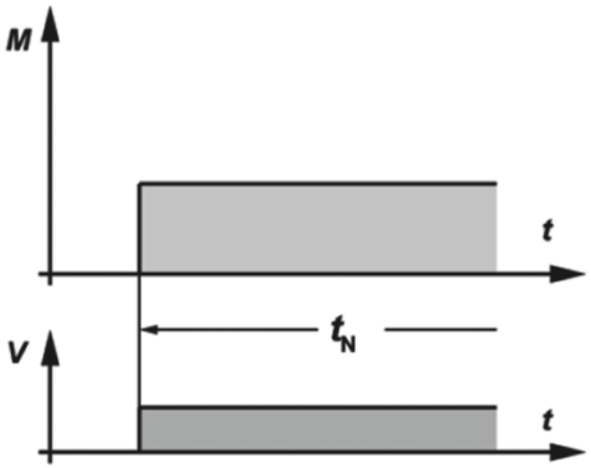

Operation under rated load for sufficient time to allow temperature equilibrium to be attained, such that the temperature does not increase any more with continued operation. The equipment can operate continuously under the rated load without exceeding the allowable temperature.

Short-time duty (S2)

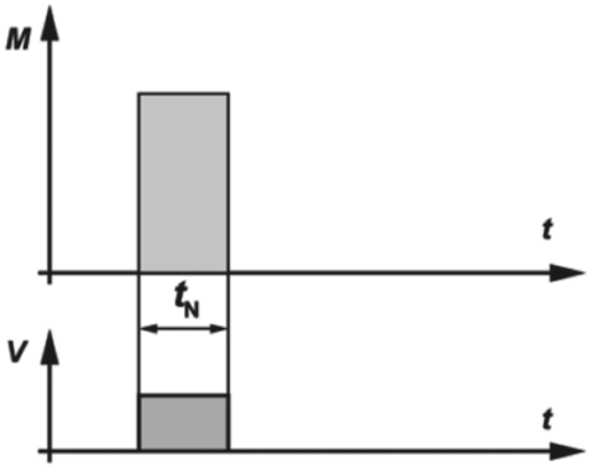

The operating time under rated load is short compared with the subsequent rest period. The standard operating times are 10, 30, 60 and 90 minutes. The equipment can operate for this period under the rated load without exceeding the allowable temperature.

Example: S2 – 60 min

Intermittent periodic duty (S3)

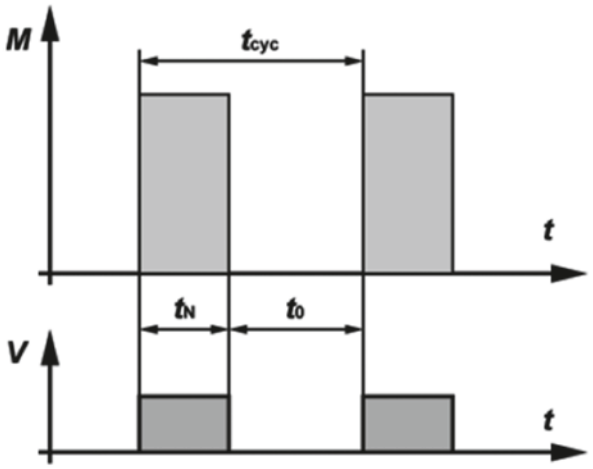

S3 duty consists of a sequence of identical cycles, each composed of an operating time with constant load and a rest time with the windings de-energised. The cycle is such that the starting current does not significantly affect the temperature rise. The operating time under rated load and the subsequent pause are both short. The equipment can operate under load only during the period indicated by the duty cycle as a percentage of the total cycle time (cycle duration).
The standardised duty cycles are 15, 25, 40 and 60 %. The cycle duration is 10 minutes unless otherwise specified.

Intermittent periodic duty means that a state of thermal equilibrium is not reached during the load interval.

The duty cycle can be determined as follows:

$$ED = \frac{t_N}{t_{cyc}} \times 100\% = \frac{t_N}{t_N + t_0} \times 100\%$$

Example: S3 – 25%

Intermittent periodic duty with starting (S4)

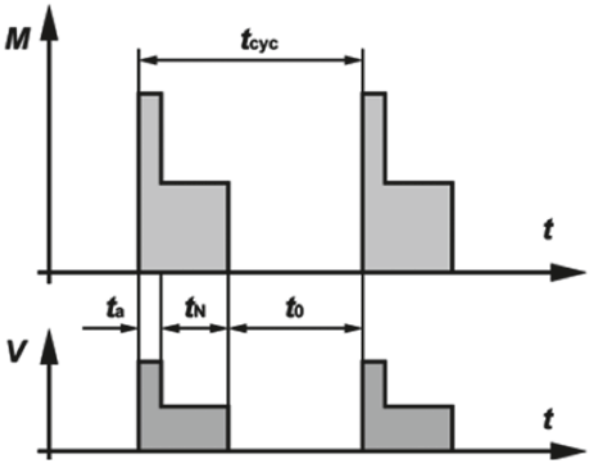

S4 duty consists of a sequence of identical cycles, each of which is composed of a distinct starting time, a time of operation under constant load, and a rest period with the windings de-energised.

The operating time under rated load and the subsequent pause are both short. The equipment can operate under load only during the period indicated by the duty cycle as a percentage of the total cycle time (cycle duration).

The standardised duty cycles are 15, 20, 40 and 60 %. The cycle duration is 10 minutes unless otherwise specified.

The load cycle corresponds to mode S3, but with additional heating during the starting time that must be taken into account.

The duty cycle can be determined as follows:

$$ED = \frac{(t_a + t_N)}{t_{cyc}} \times 100\% = \frac{t_a + t_N}{t_a + t_N + t_0} \times 100\%$$

Example: S4 – 25 %, J_M = 0.15 kgm²

Intermittent periodic duty with electric braking (S5)

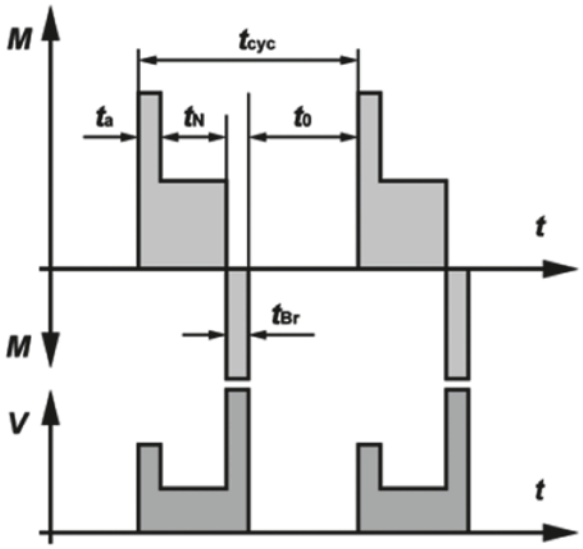

S5 duty consists of a sequence of identical cycles, each of which is composed of a starting time, a time of operation under constant load, a time of fast electric braking, and a rest period with the windings de-energised.
The operating time under rated load and the subsequent pause are both short. The equipment can operate under load only during the period indicated by the duty cycle as a percentage of the total cycle time (cycle duration).
The standardised duty cycles are 15, 20, 40 and 60 %. The cycle duration is 10 minutes unless otherwise specified.

The load cycle corresponds to S3 duty, but with additional warming during the starting time t_a and the braking time t_{Br} taken into account.

The duty cycle can be determined as follows:

$$ED = \frac{(t_a + t_N + t_{Br})}{t_{cyc}} \times 100\% = \frac{t_a + t_N + t_{Br}}{t_a + t_N + t_{Br} + t_0} \times 100\%$$

Example: S5 – 25%; J_M = 0.15 kgm², J_{ext} = 0.7 kgm²
(J_M Moment of inertia of the motor / J_{ext} Moment of inertia of the load)

Duty types as defined by EN 60034

Continuous-operation periodic duty (S6)

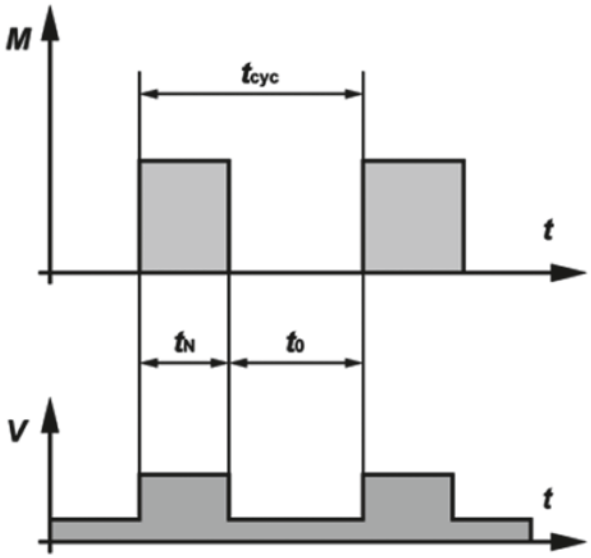

This type of duty corresponds to S3, with the exception that the equipment remains energised during the rest periods. In other words, it operates with no load during these periods. The duty cycle and cycle duration are specified the same way as for S3 duty.

The duty cycle can be determined as follows:

$$ED = \frac{t_N}{t_{cyc}} \times 100\% = \frac{t_N}{t_N + t_0} \times 100\%$$

Example: S6 – 40 %

Continuous-operation periodic duty with electric braking (S7)

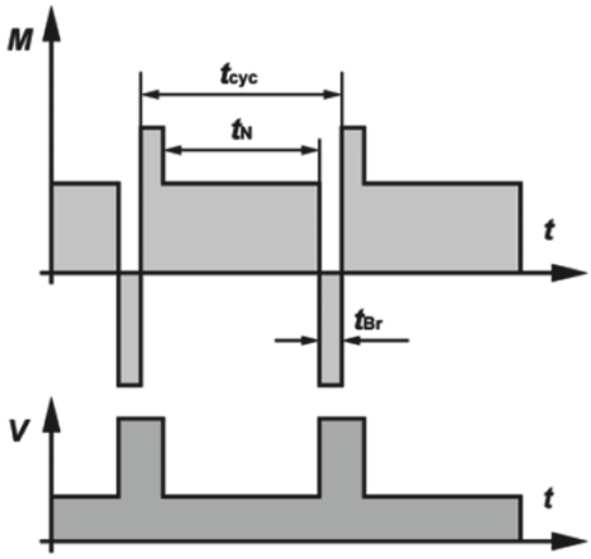

The machine starts up, operates under load, and then is braked electrically, for example by feeding it from a DC power source. Following this, it starts up again immediately. The machine can operate continuously in this manner if the specified moments of inertia of the motor J_M and of the load J_{Ext} as well as the specified duty cycle are not exceeded. If the cycle duration is not specified, it is assumed to be 10 minutes.

The duty cycle can be determined as follows: DC = 1

Example: S7 – J_M = 0.4 kgm², J_{ext} = 7.5 kgm²
(J_M Moment of inertia of the motor / J_{ext} Moment of inertia of the load)

Continuous-operation periodic duty with relative load/speed changes (S8)

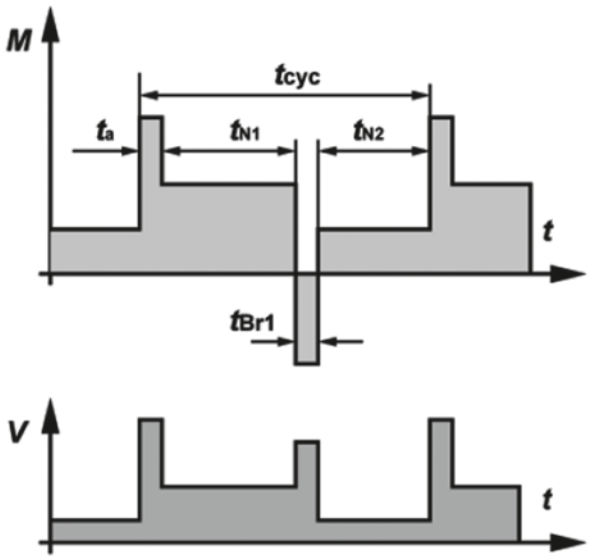

The machine runs continuously under variable load with frequent speed variations. The machine can operate continuously in this manner if at each speed the specified values are not exceeded (moments of inertia J_M and J_{Ext} cycle duration (if other than 10 minutes), rated output and duty cycle. With a moment of inertia of 1 kg m², the acceleration characteristics are the same as with a mass of 1 kg at a distance of 1 m from the axis of rotation).

The duty cycle can be determined as follows:

$$ED = \frac{t_a + t_{N1}}{t_{cyc}} \times 100\% = \frac{t_{Br} + t_{N2}}{t_{cyc}} \times 100\%$$

Example: S8 – J_M = 0.5 kgm², J_{ext} = 6 kgm²
(J_M Moment of inertia of the motor / J_{ext} Moment of inertia of the load)

Duty with non-periodic load and speed variations (S9)

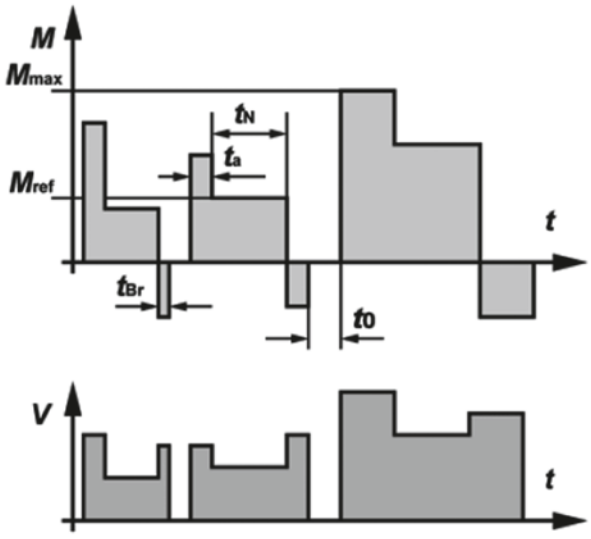

In S9 duty the load and the speed vary non-periodically within the permissible operating range. This includes frequently applied overloads, which must never exceed the reference load.
For this duty type, a constant load appropriately selected and based on duty type S1 shall be taken as the reference value M_{ref} for the overload.

Duty with discreet constant loads and speeds (S10)

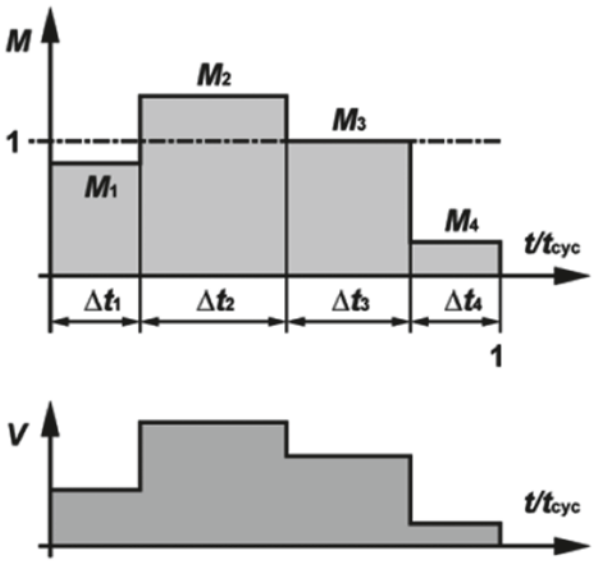

S10 duty comprises operation with at most four different load levels, each of which is maintained long enough to allow the machine to reach thermal equilibrium.
The minimum load within a duty cycle may have a value of zero (no-load operation or at rest with the windings de-energised).
The appropriate abbreviation is S10 followed by the per unit quantities $p/\Delta t$ for the respective load and its duration and the per unit quantity *TL* for the relative thermal life expectancy of the insulation system. The reference value for the thermal life expectancy is the thermal life expectancy at rating for continuous running duty and permissible limits of temperature rise based on duty type S1. For a time de-energized and at rest, the load shall be indicated by the letter *r*.

Example: S10 $p/\Delta t$ = 1.1/0.4, 1/0.3, 0.9/0.2, *r*/0.1; *TL* = 0.6

The figures given in the table below are for Bauer motors operating in conjunction with the frequency inverter. The torques referred to in tables can be entered for the respective frequencies in continuous operation (S1 = duty factor 100 %).

Notes on design

Use the torque required at the lowest operating speed to select motors for applications which require constant torque over the entire speed range, as is the case, for example, with lifting gear and conveyors. Bear in mind, too, the possibility of torque being lower in the field-weakening range.

Use only the torque required at the highest operating speed to select motors for applications which require square-law torque over the speed range, as is the case, for example, with pumps and fans. Field weakening is not permissible.

The motor‘s power is frequency-dependent. It can be approximated in kW from torque M in Nm, the 50 Hz or 60 Hz speed n and the frequency f in Hz by means of the equation

$P = M \times n / 9550 \times f/50$
or
$P = M \times n / 9550 \times f/60$

If a frequency inverter is used in conjunction with a pulse generator, the full 50 Hz or 60 Hz rated torque is available as holding torque at motor standstill (independent fan required for prolonged periods at standstill). In many instances, however, a mechanical brake is necessary for holding a position exactly or for safety reasons.

The use of thermistors for the thermal protection of the motor winding for frequency inverter duty are strictly recommended (available at extra cost for all motor sizes).

Increased torque with reduced duty factor

A reduction in duty factor increases the torque available at the low end of the frequency range (up to the transition frequency for field weakening) in accordance with the factors in the table below:

Duty factor	Motor torque with reduced duty factor	Increase in current requirementap-proximate
100 %	-	-
60 %	1.15 x S1 torque	1.15 x S1 current
40 %	1.30 x S1 torque	1.30 x S1 current
25 %	1.45 x S1 torque	1.45 x S1 current
15 %	1.60 x S1 torque	1.60 x S1 current

This, in turn, means that short-term overload by a factor of 1.6 is permissible for starting from a low speed, for example. An increase in torque in the field-weakening range due to a reduction in duty factor is possible only under certain conditions; the 1.6x S1 torque generally cannot be achieved

Increased torque with external fan

If an independent fan is used, the S1- torque in the lower frequency range (below 30 Hz) need not be reduced, i.e., when it has an independent fan the motor can provide the 50 Hz or 60 Hz rated torque throughout the entire frequency range to the cut-off frequency of the field weakening.

With a high quality frequency inverter of 160 %, when independent ventilation is combined with a reduced duty factor the 50 Hz or 60 Hz torque is available from rest through to the transition frequency of the field weakening range.

External ventilation is available for motor types D..08.. and larger (see chapter 16 “Motor-independent fan (FV). In many instances, a more economical alternative is to select a larger motor without external ventilation.

Operation with frequency converter

Energy-saving function

High quality frequency inverters reduce voltage in part-load operation to lower the motor current and thus improve efficiency. This converter function emulates the method of operation of commercially available “energy-saving devices”.

Regeneration

Regenerative torques (braking torques) are required for motors used in lifting gear, for example. In conjunction with high quality frequency inverters, the motor torques listed in the table can also be applied as regenerative torques. As with motor torque, an increase in regenerative torque with reduced duty factor is permissible.

Notes on operation with other-make frequency inverters

The precondition is that the motor current generated by the frequency converter is largely free of harmonics. The harmonics generated in the motor by some old-style frequency inverters result in additional losses and cut available torque by some 10 % across the entire frequency range. There is also a risk of oscillation causing damage to the gear unit.

At frequencies below approximately 5 Hz, operation without pulse generators is possible only using a frequency inverter with state-of- the-art control. If frequency inverters are used that do not feature load-dependent frequency and current adjustment, the increase in the motor‘s current consumption means that, particularly in the case of small motors (D..04..-D..09..), torque has to be reduced at frequencies below approximately 10 Hz even if an external fan is used or the duty factor is reduced. Regenerative operation is possible only under certain circumstances.

Technical data of the 50 Hz motors

50 Hz

4-pole IE1 motors for continuous operation S1, line frequency 50 Hz

P_N kW	Type	n_N 1/min	M_N Nm	I_N (400V) A	Connection	cosφ	η (100%-load) %	η (75%-load) %	η (50%-load) %	I_A/I_N	M_A/M_N	M_S/M_N	M_K/M_N	J_{rot} kgm²	Brake
0.03	D04LA4	1350	0.21	0.20	Y	0.60	-	-	-	2.2	2.6	2.6	3.0	0.000175	
0.04	D04LA4	1350	0.28	0.20	Y	0.60	-	-	-	2.2	2.0	2.0	2.3	0.000175	
0.06	D04LA4	1350	0.42	0.30	Y	0.60	-	-	-	2.3	2.1	2.1	2.4	0.000175	E003
0.09	D04LA4	1350	0.63	0.45	Y	0.69	-	-	-	2.5	2.2	2.2	2.6	0.000175	
0.11	D04LA4	1350	0.78	0.45	Y	0.68	-	-	-	2.2	1.9	1.9	2	0.000175	
0.06	D05LA4	1350	0.42	0.35	Y	0.72	-	-	-	3.7	3.7	3.5	3.7	0.000295	E003
0.09	D05LA4	1350	0.63	0.38	Y	0.70	-	-	-	3.9	3.0	2.8	3.0	0.000295	
0.06	D06LA4	1350	0.42	0.35	Y	0.72	-	-	-	3.7	3.7	3.5	3.7	0.000295	
0.09	D06LA4	1350	0.63	0.38	Y	0.70	-	-	-	3.9	3.0	2.8	3.0	0.000295	
0.12	DSE04LA4	1350	0.87	0.45	Y	0.72	53.4	51.4	43.2	2.3	1.7	1.4	1.8	0.000175	
0.18	DSE05LA4	1350	1.28	0.63	Y	0.66	63	61.7	54.9	3.4	2.2	2.2	2.4	0.000295	
0.2	DSE05LA4	1350	1.42	0.66	Y	0.71	61.6	61.7	54.9	3.3	2	2	2.2	0.000295	E003
0.25	DSE05LA4	1350	1.75	0.87	Y	0.68	61.5	58.8	54	2.6	2	2	2.1	0.000295	
0.18	DSE06LA4	1350	1.28	0.63	Y	0.65	63.5	61.7	53.1	3.1	2.4	2.3	2.5	0.000295	
0.2	DSE06LA4	1350	1.42	0.65	Y	0.7	62.5	61.7	53.1	3.3	2	2	2.2	0.000295	
0.25	DSE06LA4	1350	1.75	0.87	Y	0.68	61.5	58.8	51.4	2.6	2	2	2.1	0.000295	
0.37	DSE07LA4	1350	2.6	1.15	Y	0.71	66	65.2	59.7	3	2.2	2.1	2.2	0.000385	E003 E004
0.55	DSE08MA4	1400	3.75	1.45	Y	0.72	75.4	75.2	72.0	4.2	2.1	2.0	2.4	0.00115	
0.75	DSE08LA4	1400	5.1	1.95	Y	0.76	75.6	76.2	72.7	4.6	2.0	2.0	2.4	0.00150	ES(X)010 EH(X)010 EH(X)027
1.1	DSE08XA4	1400	7.5	2.8	Y	0.75	75.5	76.8	73.5	3.7	2.0	1.8	2.2	0.00170	
1.1	DSE09SA4	1420	7.5	2.6	Y	0.76	80.0	80	77.5	4.9	2.5	2.2	2.8	0.00245	
1.5	DSE09LA4	1420	10.1	3.5	Y	0.76	80.7	80.9	79.5	5.0	2.5	2.3	2.9	0.00320	ES(X)010 ES(X)027 EH(X)027 EH(X)040
2.2	DSE09XA4	1420	15	4.9	Y	0.81	80.5	81.1	80.4	4.5	2.3	2.2	2.6	0.00380	
3	DSE11SA4	1420	20	6.4	D	0.80	84.4	85.0	83.8	5.9	2.7	2.5	3.2	0.00810	ES(X)027
4	DSE11MA4	1420	27	8.4	D	0.83	84.0	84.9	84.2	5.5	2.8	2.4	3.0	0.01050	ES(X)040 ES(X)070 EH(X)070
5.5	DSE11LA4	1420	37	11.3	D	0.83	85.8	86.2	85.4	6.3	2.8	2.6	3.2	0.014	EH(X)125
7.5	DSE13MA4	1440	50	15.3	D	0.81	87.5	87.8	87.1	6.2	2.8	2.5	3.2	0.029	ES(X)040
7.5	DSE13MA4	1440	50	15.3	D	0.81	87.5	87.8	87.1	6.2	2.8	2.5	3.2	0.029	ES(X)070 ES(X)125
9.5	DSE13LA4	1440	63	19.2	D	0.82	87.1	87.5	87.5	6.0	2.9	2.6	3	0.03450	EH(X)200
11	DSE16MB4	1460	72	22.6	D	0.81	87.7	88.0	87.3	6.0	2.5	2.1	2.7	0.05700	ES(X)125
15	DSE16LB4	1460	98	29.5	D	0.83	88.9	89.2	88.9	6.1	2.5	2.1	2.8	0.07600	ES(X)200 EH(X)400
18.5	DSE16XB4	1460	121	37.5	D	0.81	89.3	89.9	88.5	6.1	2.6	2.2	2.8	0.08700	ZS(X)300
22	DSE18LB4	1460	144	41.5	D	0.85	90.7	91.0	90.5	6.8	3.0	2.5	2.8	0.16000	ES(X)250
30	DSE18XB4	1460	196	56	D	0.85	90.9	91.2	90.8	6.8	3.1	2.4	2.8	0.19500	EH(X)400 ZS(X)500

P_N	Rated power
n_N	Guideline value for rated speed at the rotor shaft
M_N	Rated torque at the rotor shaft
I_N	Rated current (the current can be converted in inverse ratio to the voltages for the desired special voltage)
cosφ	Power factor
η	Efficiency at different loads
I_A/I_N	Relative starting current
M_A/M_N	Relative starting torque
M_S/M_N	Relative pull-up torque
M_K/M_N	Relative breakdown torque
J_{rot}	Mass moment of inertia of the rotor
Brake	Brake dimensioning see chapter "Motor Mounted Components-Dimensions"

Winding configuration for standard motors for 400 V / 50 Hz.

See “www.bauergears.com” for more information.

Technical data of the 50 Hz motors

50 Hz

4-pole IE2 motors for continuous operation S1, mains frequency 50 Hz

P_N kW	Type	n_N 1/min	M_N Nm	I_N (400V) A	Connection	cosφ	η (100% - Last) %	η (75% - Last) %	η (50% - Last) %	I_A/I_N	M_A/M_N	M_S/M_N	M_K/M_N	J_{rot} kgm²	Brake
0.12	DHE05LA4	1390	0.82	0.39	Y	0.67	66.1	64.6	58.3	3.3	2.3	2.3	2.5	0.000295	E003
0.12	DHE06LA4	1385	0.83	0.39	Y	0.67	65.9	64.1	57.7	3.3	2.3	2.3	2.5	0.000295	
0.18	DHE05LA4	1375	1.25	0.57	Y	0.67	68.3	67.3	61.9	3.4	2.6	2.5	2.6	0.000295	
0.18	DHE06LA4	1370	1.25	0.58	Y	0.67	68	67	61.4	3.3	2.5	2.5	2.6	0.000295	
0.25	DHE07LA4	1375	1.74	0.76	Y	0.68	69.4	68.7	63.6	3.5	2.7	2.6	2.7	0.000385	E003 E004
0.3	DHE07LA4	1360	2.1	0.9	Y	0.67	70.8	70.5	66	3.5	2.8	2.7	2.7	0.000385	
0.37	DHE08MA4	1430	2.4	1.1	Y	0.65	75.9	74.6	69.6	4.5	2.5	2.4	3	0.00115	ES(X)010 EH(X)010 EH(X)027
0.55	DHE08LA4	1415	3.7	1.38	Y	0.74	78.1	78.9	76.2	4.5	2.3	2.1	2.6	0.0015	
0.75	DHE08XA4	1420	5.0	1.88	Y	0.72	79.7	80.0	77.4	4.7	2.3	2.2	2.7	0.00170	
0.75	DHE09SA4	1440	5.0	1.8	Y	0.73	81.6	81.0	77.4	5.9	3.1	2.7	3.5	0.00245	ES(X)010 ES(X)027 EH(X)027 EH(X)040
1.1	DHE09LA4	1440	7.3	2.5	Y	0.75	82.7	82.3	79.8	5.9	2.9	2.7	3.4	0.0032	
1.5	DHE09XA4	1440	10.0	3.3	Y	0.78	83.2	82.8	79.5	5.6	3.0	2.9	3.3	0.0038	
2.2	DHE09XB4	1420	14.8	4.7	Y	0.79	84.5	85.2	83.9	6.0	3.1	2.5	3.3	0.0049	
2.2	DHE11SA4	1440	14.5	4.6	Y	0.80	86.2	86.0	84.7	7.0	3.1	2.8	3.6	0.0081	ES(X)027 ES(X)040 ES(X)070 EH(X)070 EH(X)125
3	DHE11MA4	1440	20	6.3	D	0.8	86.5	86.5	84.7	6.7	3.4	2.8	3.7	0.0105	
4	DHE11LA4	1440	26.5	8.4	D	0.79	87.5	87	85.3	7.6	3.6	3.3	4.2	0.014	
5.5	DHE11LB4	1450	36	11	D	0.82	88.1	88.5	87.4	7.9	3.3	2.9	3.8	0.017	
5.5	DHE13MA4	1460	36	11.0	D	0.81	88.9	88.9	87.6	7.2	3.2	2.9	3.6	0.0290	ES(X)040 ES(X)070 ES(X)125 EH(X)200
7.5	DHE13LA4	1460	49	15.1	D	0.81	88.9	89.2	87.9	7.0	3.3	3.0	3.5	0.0345	
9.5	DHE16MB4	1470	62	19.7	D	0.78	89.4	89.4	86.5	6.8	2.9	2.5	3.2	0.057	ES(X)125 ES(X)200 EH(X)400 ZS(X)300
11	DHE16LB4	1470	71	22.5	D	0.78	90.3	90.0	88.3	7.9	3.5	2.9	3.8	0.076	
15	DHE16XB4	1470	97	31	D	0.77	90.6	90.8	88.8	7.2	3.2	2.8	3.5	0.087	
18.5	DHE18LB4	1470	120	35	D	0.83	91.5	91.7	90.0	7.9	3.6	3.0	3.3	0.160	ES(X)250 EH(X)400 ZS(X)500
22	DHE18XB4	1470	142	43.5	D	0.80	92.0	91.6	89.6	8.7	4.2	3.3	3.9	0.195	

P_N	Rated power
n_N	Guideline value for rated speed at the rotor shaft
M_N	Rated torque at the rotor shaft
I_N	Rated current (the current can be converted in inverse ratio to the voltages for the desired special voltage)
cosφ	Power factor
η	Efficiency at different loads
I_A/I_N	Relative starting current
M_A/M_N	Relative starting torque
M_S/M_N	Relative pull-up torque
M_K/M_N	Relative breakdown torque
J_{rot}	Mass moment of inertia of the rotor
Brake	Brake dimensioning see chapter "Motor Mounted Components-Dimensions"

Winding configuration for standard motors for 400 V / 50 Hz.

All motors are suitable for the voltage range 380…420 V or 400 V +/- 10 % if executed in insulation class F.

Important: Current, power factor and torque change as voltage deviates from 400 V.

See “www.bauergears.com” for more information.

Technical data of the 50 Hz motors

50 Hz

4-pole IE3 motors for continuous operation S1, mains frequency 50 Hz

P_N	Type	n_N	M_N	I_N (400V)	Connection	cosφ	η (100%-Load)	η (75%-Load)	η (50%Load)	I_A/I_N	M_A/M_N	M_S/M_N	M_K/M_N	J_{rot}	Brake
kW		1/min	Nm	A			%	%	%					kgm²	
0.12	DPE05LA4	1405	0.82	0.4	Y	0.62	69.3	67.1	60.5	3.8	3	3	3.1	0.000295	E003
0.12	DPE06LA4	1400	0.82	0.41	Y	0.63	68.8	66.4	59.9	3.7	3	3	3.1	0.000295	E003
0.18	DPE07LA4	1400	1.23	0.56	Y	0.65	70.8	69.3	63.9	3.9	3.1	3	3.1	0.000385	E003. E004
0.25	DPE08MA4	1440	1.66	0.71	Y	0.66	77.7	76.4	71.8	4.9	2.6	2.5	3.1	0.00115	ES(X)010 EH(X)010/027
0.37	DPE08LA4	1445	2.45	1.03	Y	0.64	79.9	78.8	74.3	5.5	3.2	3	3.6	0.0015	
0.55	DPE08XA4	1430	3.65	1.4	Y	0.7	81.2	81	77.9	5.3	2.9	2.7	3.2	0.0017	
0.75	DPE08XB4	1425	5	1.86	Y	0.71	82.5	83.1	81.3	5.3	3.1	2.8	3.3	0.002	
0.75	DPE09LA4	1440	5	1.67	Y	0.79	82.7	82.5	79.1	6.6	3.4	3	3.6	0.0032	ES(X)010/027 EH(X)027/040
1.1	DPE09XA4	1440	7.3	2.4	Y	0.78	84.4	84.3	81.9	6.7	3.4	3.1	3.7	0.0038	
1.5	DPE09XB4	1435	10	3.25	Y	0.79	85.5	86.1	84.5	6.5	3.2	3	3.6	0.0049	
2.2	DPE09XB4C	1450	14.5	4.7	Y	0.77	86.8	87.4	85.9	6.7	2.6	2.4	3.6	0.0069	
2.2	DPE11MA4	1450	14.5	4.6	Y	0.8	87.1	87.2	85.2	7.3	3.2	2.7	3.9	0.0105	ES(X)027/040/070 EH(X)/070/125
3	DPE11LA4	1455	19.7	6.2	D	0.8	87.7	87.6	85.5	8.3	3.7	3	4.4	0.014	
4	DPE11LB4	1450	26.5	7.8	D	0.83	89.4	90.3	89.5	7.8	3.3	2.6	4	0.017	
5.5	DPE11LB4C	1465	36	11	D	0.8	90	89.4	88	8.2	2.7	2.4	4	0.022	
4	DPE13MA4	1465	26	8	D	0.82	88.9	90.6	89.7	7.4	3.3	2.6	3.5	0.029	ES(X)040/070/125 EH(X)200
5.5	DPE13LA4	1465	36	11.5	D	0.77	90.2	90.3	89	8.1	3.7	3	4.2	0.0345	
7.5	DPE13XA4	1460	49	15.2	D	0.79	90.5	91.2	90.5	7.6	3.6	3.3	3.9	0.04	
9.5	DPE16LB4	1475	61	19.1	D	0.78	91.9	92.2	91.4	8.3	3.6	2.8	3.7	0.0755	ES(X)125/200 EH(X)400 ZS(X)300
11	DPE16LB4	1475	71	22	D	0.78	91.6	92.2	91.4	7.7	3.4	2.8	3.5	0.0755	
15	DPE16XB4	1475	97	30.5	D	0.78	92.2	92.6	91.8	8.3	3.8	3.1	3.9	0.097	
18.5	DPE18LB4	1480	119	35.5	D	0.81	93.3	93.6	92.7	9	4.3	3.5	4	0.17	ES(X)250 EH(X)400 ZS(X)500
22	DPE18XB4	1475	142	41.5	D	0.82	93.3	93.8	93.5	8.7	4.2	3.4	3.7	0.195	
30	DPE20XA4	1480	194	53.5	D	0.87	94.1	94.6	94.4	8.6	3.1	2.6	3.5	0.3888	ES(X)250 ZS(X)500
37	DPE22MA4	1480	239	69	D	0.83	94	94.3	94	8.8	3.3	3	3.8	0.4318	ES(X)250 ZS(X)500

P_N	Rated power
n_N	Guideline value for rated speed at the rotor shaft
M_N	Rated torque at the rotor shaft
I_N	Rated current (the current can be converted in inverse ratio to the voltages for the desired special voltage)
cosφ	Power factor
η	Efficiency at different loads
I_A/I_N	Relative starting current
M_A/M_N	Relative starting torque
M_S/M_N	Relative pull-up torque
M_K/M_N	Relative breakdown torque
J_{rot}	Mass moment of inertia of the rotor
Brake	Brake dimensioning see chapter "Motor Mounted Components-Dimensions"

Winding configuration for standard motors for 400 V / 50 Hz.

All motors are suitable for the voltage range 380…420 V or 400 V +/- 10 % if executed in insulation class F.

Important: Current, power factor and torque change as voltage deviates from 400 V.

See “www.bauergears.com” for more information.

Technical data of the 50 Hz motors

50 Hz

4 pole motors for periodic duty S3/S6-75 %, Mains Frequency 50 Hz

P_N kW	Type	n_N 1/min	M_N Nm	I_N (400V) A	Connection	cosφ	I_A/I_N	M_A/M_N	M_S/M_N	M_K/M_N	J_{rot} kgm²	Brake
0.75	DSE08MA4	1320	5.4	2	Y	0.81	2.9	1.5	1.4	1.7	0.00115	ES(X)010
0.9	DSE08LA4	1350	6.3	2.3	Y	0.79	3.4	1.6	1.6	2	0.0015	
1.25	DSE08XA4	1350	8.8	3.1	Y	0.8	3.3	1.6	1.6	1.9	0.0017	
1.65	DSE09SA4	1370	11.5	3.7	Y	0.86	3.5	1.6	1.5	1.8	0.00245	ES(X)010 ES(X)027
2.2	DSE09LA4	1370	15.5	5	Y	0.86	3.6	1.7	1.6	2	0.0032	
2.5	DSE09XA4	1370	17.3	5.5	Y	0.84	4	2	1.9	2.3	0.0038	
3.7	DSE11SA4	1400	25	7.8	D	0.85	4.1	2.2	2	2.6	0.0081	ES(X)027 ES(X)040 ES(X)070
5	DSE11MA4	1380	34	10.3	D	0.86	4.4	2.2	1.9	2.4	0.0105	
6.6	DSE11LA4	1400	44	13.5	D	0.86	4.8	2.4	2.1	2.7	0.014	
9.5	DSE13MA4	1420	63	19	D	0.85	5	2.2	2	2.5	0.029	ES(X)040 ES(X)070 ES(X)125
11	DSE13LA4	1430	73	22	D	0.84	5.3	2.5	2.3	2.6	0.0345	
13.5	DSE16MB4	1450	90	27.5	D	0.83	4.8	2	1.7	2.2	0.057	ES(X)125 ES(X)200 ZS(X)300
18.5	DSE16LB4	1450	123	36.5	D	0.85	5	2	1.7	2.2	0.076	
20	DSE16XB4	1450	132	40	D	0.82	5.7	2.3	2	2.6	0.087	
27	DSE18LB4	1450	180	52	D	0.86	5.4	2.5	2	2.2	0.16	ES(X)250 ZS(X)500
33	DSE18XB4	1450	215	63	D	0.86	5.4	2.8	2.2	2.6	0.195	

P_N	Rated power
n_N	Guideline value for rated speed at the rotor shaft
M_N	Rated torque at the rotor shaft
I_N	Rated current (the current can be converted in inverse ratio to the voltages for the desired special voltage)
cosφ	Power factor
η	Efficiency at different loads
I_A/I_N	Relative starting current
M_A/M_N	Relative starting torque
M_S/M_N	Relative pull-up torque
M_K/M_N	Relative breakdown torque
J_{rot}	Mass moment of inertia of the rotor
Brake	Brake dimensioning see chapter "Motor Mounted Components-Dimensions"

The standard motor winding configuration is for 400 V / 50 Hz.

See “www.bauergears.com” for more information.

Technical data of the 50 Hz motors

50 Hz

4 pole motors for periodic duty S3/S6, Mains Frequency 50 Hz

P_N	ED	Type	n_N	M_N	I_N (400V)	Connec-tion	cosφ	I_A/I_N	M_A/M_N	M_S/M_N	M_K/M_N	J_{rot}
kW			1/min	Nm	A							kgm²
0.15	15%	D04LA4	1350	1.05	0.6	Y	0.77	2	1.6	1.5	1.6	0.000175
0.3	15%	D05LA4	1350	2.1	0.98	Y	0.75	2.6	1.9	1.8	1.9	0.000295
0.3	60%	D06LA4	1350	2.1	0.98	Y	0.75	2.6	1.9	1.8	1.9	0.000295
0.55	60%	D07LA4	1350	3.9	1.95	Y	0.86	3.4	1.6	1.5	1.6	0.000385
0.75	60%	D08MA4	1400	5.1	2	Y	0.81	3.4	1.6	1.4	1.7	0.00115
1.1	60%	D08LA4	1400	7.5	2.8	Y	0.82	3.3	1.5	1.4	1.7	0.0015
1.5	60%	D09SA4	1400	10.2	3.6	Y	0.84	3.9	1.7	1.5	2	0.00245
2.2	60%	D09LA4	1400	15	5	Y	0.86	3.9	1.6	1.5	1.9	0.0032
3	60%	D09XA4	1400	20	6.8	Y	0.86	3.4	1.7	1.6	1.9	0.0038
4	60%	D11SA4	1420	26.5	8.9	Δ	0.85	4	1.6	1.4	2	0.0081
5.5	60%	D11MA4	1420	37	11.7	Δ	0.87	4.3	1.5	1.5	2	0.0105
7.5	60%	D11LA4	1420	50	16	Δ	0.87	4.3	1.8	1.7	2.1	0.014
9.5	60%	D13MA4	1420	64	19	Δ	0.87	4.9	1.9	1.6	2.2	0.029
11	60%	D13LA4	1420	72	22	Δ	0.84	5.5	2.4	2.1	2.5	0.0345
13.5	60%	D16MB4	1460	88	28	Δ	0.84	5.6	2.1	1.6	2	0.057
18.5	60%	D16LB4	1460	121	38	Δ	0.84	5.1	1.9	1.6	2.1	0.076
22	60%	D16XB4	1460	144	46	Δ	0.84	5.4	2.1	1.3	2	0.087
30	60%	D18LB4	1460	196	58	Δ	0.89	4.5	1.8	1.5	1.7	0.16
37	60%	D18XB4	1460	240	74	Δ	0.85	5.5	2.5	2	2.3	0.195

P_N	Rated power
ED	Duty cycle
n_N	Guideline value for rated speed at the rotor shaft
M_N	Rated torque at the rotor shaft
I_N	Rated current (the current can be converted in inverse ratio to the voltages for the desired special voltage)
cosφ	Power factor
I_A/I_N	Relative starting current
M_A/M_N	Relative starting torque
M_S/M_N	Relative pull-up torque
M_K/M_N	Relative breakdown torque
J_{rot}	Mass moment of inertia of the rotor

The standard motor winding configuration is for 400 V / 50 Hz.

See “www.bauergears.com” for more information.

Technical data of the 50 Hz motors

50 Hz

4/2-pole Δ/YY motors for continuous running duty (S1) and 50 Hz mains frequency

P_N kW	Type	n_N 1/min	M_N Nm	I_N (400V) A	cosφ	I_A/I_N	M_A/M_N	M_S/M_N	M_K/M_N	J_{rot} kgm²
0.03/0.06	D04LA42	1350/2700	0.210/0.210	0.230/0.250	0.56/0.67	2.2/3.1	3.4/3.1	3.4/3.1	3.6/3.3	0.000175
0.04/0.08	D04LA42	1350/2700	0.280/0.280	0.250/0.280	0.60/0.75	2.0/2.8	3.0/2.1	3.0/2.1	3.3/2.2	0.000175
0.06/0.12	D05LA42	1350/2700	0.420/0.420	0.450/0.450	0.50/0.75	2.8/3.3	3.1/2.0	3.0/1.9	3.8/2.6	0.000295
0.08/0.16	D05LA42	1350/2700	0.56/0.56	0.50/0.50	0.55/0.75	2.8/3.3	3.1/1.8	2.7/1.7	3.4/2.3	0.000295
0.06/0.12	D06LA42	1350/2700	0.420/0.420	0.450/0.450	0.50/0.75	2.8/3.3	3.1/2.0	3.0/1.9	3.8/2.6	0.000295
0.08/0.16	D06LA42	1350/2700	0.56/0.56	0.50/0.50	0.55/0.75	2.8/3.3	2.8/1.8	2.7/1.7	3.4/2.3	0.000295
0.11/0.22	D06LA42	1350/2700	0.77/0.77	0.68/0.68	0.55/0.75	2.8/3.3	2.8/1.8	2.7/1.7	3.4/2.3	0.000295
0.16/0.32	D06LA42	1350/2700	1.13/1.13	0.90/0.90	0.57/0.80	2.8/3.3	2.6/1.7	2.5/1.6	3.1/2.1	0.000295
0.2/0.4	D07LA42	1400/2800	1.35/1.37	1.10/1.15	0.58/0.81	2.9/3.6	2.8/1.6	2.7/1.4	3.0/2.0	0.000385
0.28/0.56	D08MA42	1400/2800	1.90/1.90	1.20/1.75	0.61/0.81	3.4/2.9	2.3/1.5	2.3/1.4	3.0/1.9	0.00115
0.4/0.8	D08LA42	1400/2800	2.7/2.7	1.53/1.91	0.62/0.90	4.7/5.1	2.7/1.8	2.4/1.7	3.1/2.1	0.0015
0.5/1.0	D09SA42	1400/2800	3.4/3.4	1.65/2.4	0.71/0.91	5.1/4.5	2.9/1.9	2.9/1.9	3.6/2.4	0.00245
0.7/1.4	D09SA42	1400/2800	4.8/4.8	2.1/3.3	0.71/0.93	4.7/4.1	2.5/1.6	2.5/1.6	3.1/2.0	0.00245
1.0/2.0	D09LA42	1400/2800	6.8/6.8	2.9/4.7	0.72/0.94	4.7/4.1	2.5/1.6	2.5/1.6	3.1/2.0	0.0032
1.2/2.4	D09XA42	1400/2800	8.2/8.1	3.8/5.7	0.65/0.87	6.2/3.0	2.5/1.8	2.5/1.8	3.1/2.3	0.0038
1.4/2.8	D11SA42	1420/2840	9.4/9.4	3.6/6.2	0.74/0.90	6.4/4.5	3.0/1.7	2.6/1.5	4.1/2.8	0.0081
2.0/4.0	D11MA42	1420/2840	13.5/13.4	5.5/9.1	0.70/0.90	6.7/5.4	3.1/2.1	2.7/1.6	3.7/2.5	0.0105
2.5/5.0	D11LA42	1420/2840	16.8/16.8	5.5/10	0.79/0.92	5.6/4.6	2.8/1.8	2.7/1.7	3.7/2.6	0.014
3.5/7.0	D13MA42	1420/2840	23/23	8.2/14.8	0.76/0.91	6.8/5.2	3.4/2.0	2.8/1.8	3.8/2.7	0.029
4.5/9.0	D13LA42	1420/2840	30.2/30	10.5/19	0.76/0.91	6.8/5.5	3.2/1.9	2.6/1.7	3.5/2.5	0.0345
5.5/11	D16MB42	1460/2920	36/36	13.4/24	0.73/0.91	6.7/5.2	2.8/1.7	2.2/1.2	3.2/2.3	0.057
7.0/14	D16LB42	1460/2920	45/45	15.5/28.5	0.78/0.92	7.2/5.5	3.1/2.1	2.5/1.4	3.3/2.6	0.076
9.0/18	D16XB42	1460/2920	58/58	19.1/36.5	0.79/0.92	7.9/5.8	2.8/1.8	2.2/1.2	3.1/2.2	0.087
12.5/25	D18LB42	1460/2920	81/81	28.5/49.5	0.77/0.89	8.5/7.0	3.9/2.8	3.3/1.9	3.8/3.0	0.16
16/32	D18XB42	1460/2920	104/104	38.5/66	0.77/0.89	7.8/6.5	3.7/2.6	3.1/1.8	3.6/2.8	0.195

P_N	Rated power
n_N	Guideline value for rated speed at the rotor shaft
M_N	Rated torque at the rotor shaft
I_N	Rated current (the current can be converted in inverse ratio to the voltages for the desired special voltage)
cosφ	Power factor
I_A/I_N	Relative starting current
M_A/M_N	Relative starting torque
M_S/M_N	Relative pull-up torque
M_K/M_N	Relative breakdown torque
J_{rot}	Mass moment of inertia of the rotor

The standard motor winding configuration is for 400 V / 50 Hz.

See “www.bauergears.com” for more information.

Technical data of the 50 Hz motors

50 Hz

8/4-pole Δ/YY motors for continuous running duty (S1) and 50 Hz mains frequency

P_N kW	Type	n_N 1/min	M_N Nm	I_N (400V) A	cosφ	I_A/I_N	M_A/M_N	M_S/M_N	M_K/M_N	J_{rot} kgm²
0.03/0.06	D05LA84	680/1350	0.410/0.420	0.300/0.280	0.52/0.71	1.6/2.6	2.7/1.9	1.6/1.7	1.6/1.7	0.000295
0.03/0.06	D06LA84	680/1350	0.410/0.420	0.300/0.280	0.52/0.71	1.6/2.6	2.7/1.9	1.6/1.7	1.6/1.7	0.000295
0.04/0.08	D06LA84	680/1350	0.54/0.56	0.480/0.400	0.52/0.66	1.4/2.2	2.6/2.1	1.6/1.7	1.6/1.7	0.000295
0.06/0.12	D07LA84	680/1350	0.84/0.85	0.70/0.60	0.52/0.66	1.7/2.8	3.2/1.7	3.2/1.5	3.3/2.1	0.000385
0.06/0.12	D08LA84	700/1400	0.81/0.81	0.50/0.50	0.61/0.83	2.8/3.7	3.1/2.3	3.1/2.3	3.7/3.1	0.0025
0.08/0.16	D08LA84	700/1400	1.08/1.09	0.62/0.62	0.61/0.83	2.8/3.7	3.0/2.2	3.0/2.2	3.5/3.0	0.0025
0.11/0.22	D08LA84	700/1400	1.49/1.5	0.80/0.80	0.61/0.83	2.8/3.7	2.8/2.1	2.8/2.1	3.3/2.8	0.0025
0.14/0.28	D08LA84	700/1400	1.90/1.91	1.00/1.00	0.61/0.83	2.8/3.7	2.8/2.1	2.8/2.1	3.3/2.8	0.0025
0.2/0.4	D08LA84	700/1400	2.7/2.7	1.10/1.30	0.55/0.77	2.8/3.7	2.3/1.7	2.3/1.7	2.7/2.3	0.0025
0.25/0.5	D09XC84	700/1400	3.3/3.3	1.40/1.40	0.48/0.77	2.9/5.0	2.7/2.0	2.7/2.1	3.1/2.7	0.006
0.28/0.56	D09XC84	700/1400	3.8/3.8	1.40/1.50	0.57/0.80	2.9/4.9	2.4/1.8	2.4/1.9	2.8/2.4	0.006
0.4/0.8	D09XC84	700/1400	5.4/5.4	1.95/2.4	0.55/0.79	2.8/4.2	2.3/1.7	2.3/1.8	2.7/2.3	0.006
0.5/1.0	D09XC84	700/1400	6.8/6.8	2.4/2.6	0.55/0.81	2.6/4.0	2.2/1.6	2.2/1.6	2.5/2.2	0.006
0.8/1.6	D11LC84	710/1420	10.7/10.7	3.0/4.2	0.63/0.88	3.5/4.3	2.2/1.9	2.2/1.7	2.8/2.7	0.0215
1.1/2.2	D11LC84	710/1420	14.7/14.7	4.0/5.0	0.58/0.85	3.9/5.7	2.3/2.1	2.3/1.7	2.7/2.5	0.0215
1.6/3.2	D11LC84	710/1420	21.5/21.5	6.0/7.6	0.59/0.84	3.7/5.1	2.2/1.8	2.1/1.5	2.6/2.3	0.0215
2.2/4.4	D13LC84	710/1420	29/29	7.2/9.5	0.60/0.87	4.3/5.4	2.1/1.7	2.1/1.4	2.9/2.8	0.046
2.8/5.6	D13LC84	710/1420	37.5/37.5	9.4/12.3	0.60/0.86	4.3/5.4	2.1/1.7	2.1/1.4	2.9/2.8	0.046
3.5/7.0	D16MB84	730/1460	45.8/45.5	13.9/15.6	0.59/0.84	3.3/4.9	2.1/1.8	1.8/1.4	2.1/2.2	0.057
5.0/10	D16LB84	730/1460	65/65	17.5/20.5	0.57/0.87	3.6/5.6	2.1/1.8	1.9/1.4	2.1/2.2	0.076
7.0/14	D16XB84	730/1460	91/91	24.5/29	0.60/0.84	3.3/5.2	2.1/1.9	2.0/1.6	2.1/2.4	0.087
8.0/16	D18LB84	730/1460	105/104	24/32.5	0.60/0.86	3.7/5.5	2.2/2.2	1.8/1.8	1.9/2.1	0.16
44105	D18XB84	730/1460	130/130	30/41	0.60/0.86	3.7/5.5	2.2/2.2	1.8/1.8	1.9/2.1	0.195

P_N	Rated power
n_N	Guideline value for rated speed at the rotor shaft
M_N	Rated torque at the rotor shaft
I_N	Rated current (the current can be converted in inverse ratio to the voltages for the desired special voltage)
cosφ	Power factor
I_A/I_N	Relative starting current
M_A/M_N	Relative starting torque
M_S/M_N	Relative pull-up torque
M_K/M_N	Relative breakdown torque
J_{rot}	Mass moment of inertia of the rotor

The standard motor winding configuration is for 400 V / 50 Hz.

See “www.bauergears.com” for more information.

Technical data of the 50 Hz motors

50 Hz

8/2-pole Y/Y motors for intermittent periodic duty S3 25/75 % and 50 Hz mains frequency

P_N kW	ED	Type	n_N 1/min	M_N Nm	I_N (400V) A	cosφ	I_A/I_N	M_A/M_N	M_S/M_N	M_K/M_N	J_{rot} kgm²
0.04/0.16	25/75 %	D05LA82	680/2700	0.56/0.56	0.400/0.80	0.63/0.75	1.6/3.2	1.9/2.2	1.9/2.1	2.0/2.3	0.000295
0.05/0.20	25/75 %	D06LA82	680/2700	0.70/0.70	0.51/1.02	0.63/0.75	1.4/2.8	1.7/2.0	1.7/1.9	1.8/2.1	0.000295
0.063/0.25	25/75 %	D07LA82	650/2840	0.87/0.87	0.60/1.20	0.69/0.62	1.4/2.6	1.6/1.4	1.6/1.4	1.8/2.7	0.000385
0.071/0.28	25/75 %	D07LA82	650/2840	0.99/0.98	0.65/1.40	0.69/0.68	1.4/2.6	1.5/1.3	1.5/1.3	1.7/2.6	0.000385
0.063/0.25	25/75 %	D08LA82	700/2800	0.85/0.85	0.55/0.70	0.55/0.87	2.8/4.0	2.4/2.6	2.4/2.5	2.8/3.0	0.0015
0.09/0.36	25/75 %	D08LA82	700/2800	1.22/1.22	0.70/1.05	0.60/0.92	2.9/4.5	2.0/2.6	2.0/2.5	2.4/2.9	0.0015
0.12/0.5	25/75 %	D08LA82	700/2800	1.70/1.70	0.95/1.43	0.60/0.92	2.9/4.5	2.0/2.6	2.0/2.5	2.4/2.9	0.0015
0.16/0.63	25/75 %	D08LA82	700/2800	2.1/2.1	1.20/1.45	0.63/0.90	2.0/4.6	1.8/2.1	1.8/2.0	2.2/2.4	0.0015
0.25/1.0	25/75 %	D09XA82	700/2800	3.4/3.4	1.30/2.3	0.62/0.90	2.2/5.2	1.9/2.3	1.9/2.3	2.0/2.6	0.0038
0.36/1.4	25/75 %	D09XA82	700/2800	4.9/4.8	2.1/3.3	0.57/0.87	2.0/4.5	1.9/2.1	1.9/2.1	2.0/2.4	0.0038
0.45/1.8	25/75 %	D09XA82	700/2800	6.1/6.1	2.4/4.3	0.65/0.89	2.0/4.3	1.7/2.0	1.7/2.0	2.0/2.5	0.0038
0.56/2.2	25/75 %	D11LA82	710/2840	7.5/7.3	2.3/4.7	0.60/0.94	3.2/4.9	1.9/2.9	1.9/2.4	2.2/2.9	0.014
0.71/2.8	25/75 %	D11LA82	710/2840	9.5/9.4	2.8/5.6	0.58/0.94	2.5/4.7	1.9/2.3	1.9/2.0	2.1/2.4	0.014
0.90/3.6	25/75 %	D11LA82	710/2840	12.1/12.1	3.5/7.9	0.58/0.94	2.5/4.5	1.8/2.0	1.8/1.8	2.0/2.1	0.014
1.10/4.5	25/75 %	D13LA82	710/2840	14.7/15.1	4.0/10.1	0.59/0.90	2.8/5.4	1.8/2.5	1.8/1.8	2.3/2.7	0.0345
1.25/5.0	25/75 %	D13LA82	710/2840	16.8/16.8	4.5/11.5	0.59/0.88	2.9/5.4	1.6/2.3	1.6/1.8	2.1/2.7	0.0345
1.6/6.3	25/75 %	D16XB82	730/2920	20/20.5	7.6/13.5	0.48/0.88	3.6/6.5	2.4/3.0	2.2/2.1	2.7/3.0	0.087
2.0/8.0	25/75 %	D16XB82	730/2920	25.5/26	9.5/17	0.50/0.89	3.6/6.1	2.4/3.0	2.1/2.0	2.7/3.0	0.087
2.8/11	25/75 %	D16XB82	730/2920	36.6/36	11.5/24	0.53/0.91	3.0/5.9	1.8/2.9	1.6/2.0	1.9/2.8	0.087
3.6/14	25/75 %	D18XB82	730/2920	47/45.5	13.6/30.5	0.55/0.91	3.3/4.9	1.7/2.2	1.6/1.5	2.1/2.4	0.195
4.0/16	25/75 %	D18XB82	730/2920	52/52	15.1/34.5	0.55/0.91	3.3/4.9	1.7/2.2	1.6/1.5	2.1/2.4	0.195
5.0/20	25/75 %	D18XB82	730/2920	65/65	18.8/43	0.55/0.91	3.3/4.9	1.7/2.2	1.6/1.5	2.1/2.4	0.195

P_N	Rated power
ED	Duty cycle
n_N	Guideline value for rated speed at the rotor shaft
M_N	Rated torque at the rotor shaft
I_N	Rated current (the current can be converted in inverse ratio to the voltages for the desired special voltage)
cosφ	Power factor
I_A/I_N	Relative starting current
M_A/M_N	Relative starting torque
M_S/M_N	Relative pull-up torque
M_K/M_N	Relative breakdown torque
J_{rot}	Mass moment of inertia of the rotor

The standard motor winding configuration is for 400 V / 50 Hz.

See “www.bauergears.com” for more information.

Technical data of the 50 Hz motors

50 Hz

12/2-pole Y/Y motors for intermittent periodic duty S3 25/75 % and 50 Hz mains frequency

P_N kW	DC	Type	n_N 1/min	M_N Nm	I_N (400V) A	cosφ	I_A/I_N	M_A/M_N	M_S/M_N	M_K/M_N	J_{rot} kgm²
0.045/0.28	25/75 %	D08LA122	470/2800	0.92/0.95	0.55/0.86	0.70/0.90	1.4/4.5	1.9/2.4	1.9/2.4	1.9/2.7	0.0015
0.063/0.4	25/75 %	D08LA122	470/2800	1.29/1.36	0.66/1.10	0.70/0.90	1.4/4.5	1.7/2.2	1.7/2.2	1.7/2.4	0.0015
0.09/0.56	25/75 %	D08LA122	470/2800	1.85/1.91	1.00/1.45	0.63/0.89	1.4/4.1	1.7/2.1	1.7/2.3	1.8/2.4	0.0015
0.11/0.71	25/75 %	D09XA122	470/2800	2.3/2.4	1.05/1.60	0.59/0.88	1.5/5.5	1.7/2.7	1.7/2.6	1.8/3.3	0.0038
0.16/1.0	25/75 %	D09XA122	470/2800	3.2/3.4	1.70/2.4	0.62/0.89	1.5/5.5	1.8/2.6	1.8/2.5	1.8/3.3	0.0038
0.20/1.25	25/75 %	D09XA122	470/2800	4.1/4.2	2.0/3.0	0.62/0.89	1.5/5.0	1.7/2.4	1.7/2.3	1.7/3.1	0.0038
0.25/1.6	25/75 %	D11LA122	470/2840	5.1/5.3	2.3/3.4	0.53/0.95	1.6/4.9	1.7/2.6	1.7/2.4	2.0/2.8	0.014
0.32/2.0	25/75 %	D11LA122	470/2840	6.5/6.7	2.9/4.0	0.53/0.94	1.6/4.7	1.7/2.5	1.7/2.2	2.0/2.7	0.014
0.45/2.8	25/75 %	D11LA122	470/2840	9.2/9.4	4.5/5.6	0.52/0.94	1.6/4.7	1.5/2.3	1.5/2.0	1.8/2.4	0.014
0.63/4.0	25/75 %	D13LA122	470/2840	12.9/13.4	4.1/8.6	0.45/0.95	1.6/5.6	1.6/2.4	1.6/1.8	1.8/2.7	0.0345
0.80/5.0	25/75 %	D13LA122	470/2840	16.3/16.8	6.3/11.3	0.41/0.92	1.7/5.3	1.5/2.7	1.5/1.9	2.0/2.9	0.0345
1.0/6.3	25/75 %	D16XB122	490/2920	19.6/20	8.0/13.4	0.35/0.90	2.2/6.3	1.9/2.7	1.9/1.7	2.4/2.8	0.087
1.25/8.0	25/75 %	D16XB122	490/2920	24.5/26	9.9/16.9	0.35/0.90	2.2/6.3	1.9/2.7	1.9/1.7	2.4/2.8	0.087
1.6/10	25/75 %	D16XB122	490/2920	30.5/32	10.5/21	0.40/0.92	1.9/5.4	1.6/2.4	1.6/1.4	2.1/2.4	0.087
2.4/14	25/75 %	D18XB122	490/2920	47/45	16.6/31	0.39/0.91	1.8/4.3	1.6/2.6	1.7/2.0	1.9/2.6	0.195
2.5/16	60/60 %	D18XB122	490/2920	49/52	15.5/31	0.46/0.92	1.8/5.4	1.6/2.5	1.4/1.5	1.6/2.6	0.195
2.8/18	10/40 %	D18XB122	490/2920	55/58	19.3/39.5	0.39/0.91	1.8/4.3	1.6/2.6	1.7/2.0	1.9/2.6	0.195

P_N	Rated power
ED	Duty cycle
n_N	Guideline value for rated speed at the rotor shaft
M_N	Rated torque at the rotor shaft
I_N	Rated current (the current can be converted in inverse ratio to the voltages for the desired special voltage)
cosφ	Power factor
I_A/I_N	Relative starting current
M_A/M_N	Relative starting torque
M_S/M_N	Relative pull-up torque
M_K/M_N	Relative breakdown torque
J_{rot}	Mass moment of inertia of the rotor

The standard motor winding configuration is for 400 V / 50 Hz.

See “www.bauergears.com” for more information.

Technical data of the 60 Hz motors

60 Hz

4-pole IE1 motors for continuous operation S1, mains frequency 60 Hz

P_N kW	Type	n_N 1/min	M_N Nm	I_N (460V) A	Connec-tion	cosφ	η (100%-Load) %	η (75%-Load) %	η (50%-Load) %	I_A/I_N	M_A/M_N	M_S/M_N	M_K/M_N	J_{rot} kgm²	Brake
0.03	D04LA4	1620	0.17	0.18	Y	0.60	-	-	-	2.4	2.9	2.9	3.3	0.000175	
0.04	D04LA4	1620	0.23	0.18	Y	0.60	-	-	-	2.4	2.2	2.2	2.5	0.000175	
0.06	D04LA4	1620	0.35	0.28	Y	0.60	-	-	-	2.5	2.3	2.3	2.7	0.000175	E003
0.09	D04LA4	1620	0.52	0.40	Y	0.69	-	-	-	2.7	2.4	2.4	2.9	0.000175	
0.11	D04LA4	1620	0.64	0.42	Y	0.58	-	-	-	2.7	2.4	2.4	2.7	0.000175	
0.12	D04LA4	1620	0.7	0.42	Y	0.73	-	-	-	2.5	1.9	1.9	2.1	0.000175	
0.06	D05LA4	1620	0.35	0.32	Y	0.72	-	-	-	4.1	4.1	3.8	4.1	0.000295	
0.09	D05LA4	1620	0.52	0.35	Y	0.70	-	-	-	4.3	3.3	3.1	3.3	0.000295	
0.12	D05LA4	1620	0.7	0.38	Y	0.73	-	-	-	3.7	2.4	2.3	2.4	0.000295	E003
0.18	D05LA4	1620	1.06	0.58	Y	0.70	-	-	-	3.7	2.5	2.4	2.6	0.000295	
0.25	D05LA4	1620	1.45	0.80	Y	0.69	-	-	-	3.6	2.5	2.4	2.5	0.000295	
0.06	D06LA4	1620	0.35	0.32	Y	0.72	-	-	-	4.1	4.1	3.8	4.1	0.000295	
0.09	D06LA4	1620	0.52	0.35	Y	0.70	-	-	-	4.3	3.3	3.1	3.3	0.000295	
0.12	D06LA4	1620	0.7	0.38	Y	0.73	-	-	-	3.7	2.4	2.3	2.4	0.000295	E003
0.18	D06LA4	1620	1.06	0.58	Y	0.70	-	-	-	3.7	2.5	2.4	2.6	0.000295	
0.25	D06LA4	1620	1.45	0.80	Y	0.69	-	-	-	3.6	2.5	2.4	2.5	0.000295	
0.3	D07LA4	1620	1.76	1.20	Y	0.60	-	-	-	3.0	3.0	3.0	3.1	0.000385	E003 E004
0.37	D07LA4	1620	2.1	1.26	Y	0.66	-	-	-	2.8	2.4	2.4	2.4	0.000385	
0.55	DSE08MA4	1720	3.1	1.28	Y	0.72	75.4	75.2	73.0	4.6	2.3	2.2	2.7	0.00115	
0.75	DSE08LA4	1720	4.15	1.75	Y	0.69	78.2	77.0	72.7	4.8	2.5	2.4	2.9	0.00150	ES(X)010 EH(X)010 EH(X)027
1.1	DSE08XA4	1720	6.2	2.4	Y	0.71	79.0	77.0	73.0	4.1	2.2	2.0	2.4	0.00170	
1.1	DSE09SA4	1740	6.05	2.3	Y	0.72	83.6	82.6	79.2	6.5	3.6	3.3	4.0	0.00245	
1.5	DSE09LA4	1740	8.25	3.1	Y	0.72	84.2	83.5	80.4	6.5	3.4	3.1	4.0	0.00320	ES(X)010 ES(X)027 EH(X)027 EH(X)040
2.2	DSE09XA4	1720	12.2	4.3	Y	0.76	84.9	85.0	83.0	6.2	3.3	3.0	3.6	0.00380	
3	DSE11SA4	1740	16.4	5.5	D	0.78	86.7	86.6	84.4	6.9	3.0	2.7	3.8	0.00810	
4	DSE11MA4	1740	21.9	7.2	D	0.81	86.2	86.4	84.9	6.9	3.3	2.7	3.7	0.01050	ES(X)027 ES(X)040 ES(X)070 EH(X)070 EH(X)125
5.5	DSE11LA4	1740	30.2	9.7	D	0.81	87.7	87.8	86	7.6	3.3	2.9	4	0.014	
7.5	DSE13MA4	1760	41	13.3	D	0.8	89.1	89.1	87.6	7.6	3.4	2.9	3.6	0.029	
9.5	DSE13LA4	1760	52	16.6	D	0.81	88.4	88.7	87.5	7.3	3.4	2.9	3.4	0.0345	ES(X)040 ES(X)070 ES(X)125 EH(X)200
11	DSE16MB4	1760	59	19.3	D	0.80	88.7	88.8	87.5	6.9	2.9	2.2	3.0	0.05700	
15	DSE16LB4	1760	81	25.3	D	0.83	89.6	89.8	88.8	6.7	2.7	2.3	3.1	0.07600	ES(X)125 ES(X)200 EH(X)400 ZS(X)300
18.5	DSE16XB4	1760	100	32	D	0.81	90.5	89.7	88.7	6.7	2.8	2.4	3.1	0.08700	
22	DSE18LB4	1760	120	36	D	0.85	91.1	91.2	89.9	7.4	3.3	2.7	3.1	0.16000	ES(X)250 EH(X)400 ZS(X)500
30	DSE18XB4	1760	162	49	D	0.83	91.8	91.8	90.8	7.4	3.4	2.6	3.1	0.19500	

14

P_N	Rated power
n_N	Guideline value for rated speed at the rotor shaft
M_N	Rated torque at the rotor shaft
I_N	Rated current (the current can be converted in inverse ratio to the voltages for the desired special voltage)
cosφ	Power factor
η	Efficiency at different loads
I_A/I_N	Relative starting current
M_A/M_N	Relative starting torque
M_S/M_N	Relative pull-up torque
M_K/M_N	Relative breakdown torque
J_{rot}	Mass moment of inertia of the rotor
Brake	Brake dimensioning see chapter "Motor Mounted Components-Dimensions"

The standard motor winding configuration is for 460 V / 60 Hz.

See “www.bauergears.com” for more information.

Technical data of the 60 Hz motors

60 Hz

4-pole IE2 motors for continuous operation S1, mains frequency 60 Hz

P_N kW	Type	n_N 1/min	M_N Nm	I_N (460 V) A	Connec-tion	cosφ	η (100%-Last) %	η (75%-Last) %	η (50%-Last) %	I_A/I_N	M_A/M_N	M_S/M_N	M_K/M_N	J_{rot} kgm²	Brake
0.12	DHE05LA4	1710	0.67	0.36	Y	0.61	68.8	65.8	58.9	4	2.8	2.8	3.2	0.000295	
0.12	DHE06LA4	1710	0.67	0.36	Y	0.6	68.4	65.4	58.1	3.9	2.8	2.8	3.3	0.000295	E003
0.18	DHE05LA4	1700	1.01	0.52	Y	0.61	71.6	69.3	63.1	4	3.2	3.1	3.3	0.000295	
0.18	DHE06LA4	1700	1.01	0.53	Y	0.6	71.2	68.8	62.4	3.9	3.2	3.1	3.3	0.000295	
0.25	DHE07LA4	1700	1.4	0.7	Y	0.62	72.6	70.3	64.6	4.2	3.4	3.2	3.5	0.000385	E003
0.3	DHE07LA4	1690	1.7	0.82	Y	0.62	74.6	73	67.6	4.2	3.5	3.3	3.5	0.000385	E004
0.37	DHE08MA4	1745	2	0.99	Y	0.6	77.8	75.7	70.1	5.9	2.9	2.7	3.6	0.00115	
0.55	DHE08LA4	1730	3	1.23	Y	0.69	80.5	79.9	76.3	5.4	2.7	2.4	3.2	0.0015	ES(X)010 EH(X)010 EH(X)027
0.75	DHE08XA4	1720	4.1	1.60	Y	0.72	82.5	81.0	78.0	5.1	2.5	2.4	3.0	0.0017	
0.75	DHE09SA4	1740	4.1	1.60	Y	0.70	83.7	82.4	78.3	7.3	3.4	3.0	4.0	0.00245	
1.1	DHE09LA4	1740	6.0	2.25	Y	0.73	84.8	83.8	80.4	7.3	3.6	3.3	4.3	0.0032	ES(X)010 ES(X)027 EH(X)027 EH(X)040
1.5	DHE09XA4	1740	8.2	2.95	Y	0.74	85.8	85.2	82.5	7.2	3.7	3.5	4.3	0.0038	
2.2	DHE09XB4	1740	12.1	4.1	Y	0.77	87.5	87.1	85.2	7.5	3.4	3.1	4.0	0.0049	
2.2	DHE11SA4	1760	12	4.0	Y	0.78	87.7	87.2	84.1	8.3	3.5	3.1	4.3	0.0081	
3	DHE11MA4	1760	16.5	5.5	D	0.78	87.6	87.2	83.9	7.9	3.9	3.1	4.4	0.0105	ES(X)027 ES(X)040 ES(X)070 EH(X)070 EH(X)125
4	DHE11LA4	1760	21.5	7.3	D	0.77	88.3	87.5	84.6	9.3	4.1	3.6	4.9	0.014	
5.5	DHE11LB4	1750	30	9.6	D	0.8	89.5	89.2	87.4	9.1	3.6	3.2	4.5	0.017	
5.5	DHE13MA4	1760	30	9.7	D	0.80	89.7	89.3	87.1	8.5	3.8	3.3	4	0.029	ES(X)040 ES(X)070 ES(X)125 EH(X)200
7.5	DHE13LA4	1760	40.5	13.2	D	0.8	89.6	89.2	87.2	8.2	3.9	3.4	4	0.0345	
9.5	DHE16LB4	1760	51	16.5	D	0.79	91.4	90.1	89.7	9.1	3.7	3.2	4.1	0.076	ES(X)125 ES(X)200 EH(X)400 ZS(X)300
11	DHE16LB4	1780	59	19.6	D	0.78	91.0	90.5	88.0	8.7	3.8	3.2	4.2	0.076	
15	DHE16XB4	1780	81	27	D	0.77	91.0	90.8	88.6	7.9	3.8	3.4	4.2	0.087	
18.5	DHE18LB4	1780	100	31	D	0.82	92.5	91.2	89.1	8.7	3.9	3.3	3.6	0.16	ES(X)250 EH(X)400 ZS(X)500
22	DHE18XB4	1780	118	38.5	D	0.79	92.5	92.0	89.0	9.5	4.6	3.6	4.3	0.195	

P_N	Rated power
n_N	Guideline value for rated speed at the rotor shaft
M_N	Rated torque at the rotor shaft
I_N	Rated current (the current can be converted in inverse ratio to the voltages for the desired special voltage)
cosφ	Power factor
η	Efficiency at different loads
I_A/I_N	Relative starting current
M_A/M_N	Relative starting torque
M_S/M_N	Relative pull-up torque
M_K/M_N	Relative breakdown torque
J_{rot}	Mass moment of inertia of the rotor
Brake	Brake dimensioning see chapter "Motor Mounted Components-Dimensions"

Winding configuration for standard motors for 460 V / 60 Hz.

All motors are suitable for the voltage range 440…480 V or 460 V +/- 10 % if executed in insulation class F.

Important: Current, power factor and torque change as voltage deviates from 460 V.

See “www.bauergears.com” for more information.

Technical data of the 60 Hz motors

60 Hz

4-pole IE3 motors for continuous operation S1, mains frequency 60 Hz

PN	Type	n_N	M_N	I_N (460 V)	Connec-tion	cosφ	η (100%-Load)	η (75%-Load)	η (50%-Load)	I_A/I_N	M_A/M_N	M_S/M_N	M_K/M_N	J_{rot}	Brake
kW		1/min	Nm	A			%	%	%					kgm²	
0.12	DPE05LA4	1715	0.67	0.37	Y	0.57	71.4	68.2	61	4.4	3.7	3.6	3.9	0.000295	E003
0.12	DPE06LA4	1715	0.67	0.37	Y	0.57	70.8	67.4	60.3	4.4	3.7	3.6	3.9	0.000295	E003
0.18	DPE07LA4	1715	1	0.52	Y	0.6	73.1	70.5	64.2	4.7	3.8	3.6	3.9	0.000385	E003. E004
0.25	DPE08MA4	1745	1.37	0.65	Y	0.63	78.2	76.2	70.9	5.5	3	2.7	3.7	0.00115	ES(X)010 EH(X)010/027
0.37	DPE08LA4	1750	2	0.94	Y	0.6	81.5	79.4	74.3	6.3	3.6	3.3	4.3	0.0015	
0.55	DPE08XA4	1740	3	1.25	Y	0.67	82.9	81.7	77.9	6.2	3.4	3	3.9	0.0017	
0.75	DPE08XB4	1735	4.15	1.67	Y	0.67	85	84.6	81.7	6.4	3.6	3.1	4	0.002	
0.75	DPE09LA4	1750	4.1	1.45	Y	0.76	83.9	82.6	78.9	7.7	3.7	3.4	4.2	0.0032	ES(X)010/027 EH(X)027/040
1.1	DPE09XB4	1755	6	2.2	Y	0.73	87.4	86.4	83.5	8.7	4.2	3.8	5	0.0049	
1.5	DPE09XB4	1745	8.2	2.9	Y	0.76	87.1	86.8	84.4	7.6	3.6	3.4	4.3	0.0049	
2.2	DPE11LB4	1760	11.9	3.7	Y	0.83	90.3	90	88.3	9.5	3.7	3.2	4.5	0.017	ES(X)027/040/070 EH(X)070/125
3	DPE11LB4	1760	16.3	5.2	D	0.81	90.7	90.5	88.9	9	3.8	3.3	4.6	0.017	
4	DPE11LB4	1760	21.7	6.9	D	0.81	90.5	90.5	89.5	9.3	3.7	3	4.7	0.017	
4	DPE13MA4	1770	21.6	7	D	0.8	89.6	89.1	86.9	8.5	3.7	2.7	4.1	0.029	ES(X)040/070/125 EH(X)200
5.5	DPE13XA4	1770	29.5	9.5	D	0.79	91.8	91.8	90.4	9	4.4	3.1	4.2	0.04	
7.5	DPE13XA4	1765	40.5	13.2	D	0.77	91.8	91.9	90.6	8.5	3.7	3	4.1	0.04	
9.5	DPE16LB4	1780	51	16.7	D	0.77	92.5	92.3	90.8	8.7	3.5	2.1	3.5	0.0755	ES(X)125/200 EH(X)400 ZS(X)300
11	DPE16LB4	1780	59	19.3	D	0.77	92.5	92.6	91.2	8	3.3	2	3.3	0.0755	
15	DPE16XB4	1780	80.5	26.2	D	0.77	93.3	93.1	92	8.8	3.7	2.3	3.6	0.097	
18.5	DPE18LB4	1780	99	31	D	0.8	93.8	93.7	92.6	9.6	4.3	2.7	3.7	0.17	ES(X)250 EH(X)400 ZS(X)500
22	DPE18XB4	1780	118	36.5	D	0.81	93.8	93.9	93.2	9.1	3.9	2.4	3.2	0.195	
30	DPE20XA4	1785	160	46.5	D	0.86	94.8	94.9	94.4	9.5	3.4	2.9	3.9	0.3888	ES(X)250 ZS(X)500
37	DPE22MA4	1780	198	60	D	0.82	94.8	94.8	94.2	9.7	3.7	3.3	4.2	0.4318	ES(X)250 ZS(X)500

P_N	Rated power
n_N	Guideline value for rated speed at the rotor shaft
M_N	Rated torque at the rotor shaft
I_N	Rated current (the current can be converted in inverse ratio to the voltages for the desired special voltage)
cosφ	Power factor
η	Efficiency at different loads
I_A/I_N	Relative starting current
M_A/M_N	Relative starting torque
M_S/M_N	Relative pull-up torque
M_K/M_N	Relative breakdown torque
J_{rot}	Mass moment of inertia of the rotor
Brake	Brake dimensioning see chapter "Motor Mounted Components-Dimensions"

The standard motor winding configuration is for 460 V / 60 Hz.

All motors are suitable for the voltage range 440…480 V or 460 V +/- 10 % if executed in insulation class F.

Important: Current, power factor and torque change as voltage deviates from 460 V.

See “www.bauergears.com” for more information.

Technical data of the 60 Hz motors

60 Hz

4-pole motors for intermittent periodic duty (S3/S6 75 %) and 60 Hz mains frequency

P_N kW	Type	n_N 1/min	M_N Nm	I_N (460 V) A	Connection	cosφ	I_A/I_N	M_A/M_N	M_S/M_N	M_K/M_N	J_{rot} kgm²	Brake
0.9	DSE08MA4	1620	5.4	2.1	Y	0.81	3.2	1.6	1.5	1.9	0.00115	ES(X)010
1.1	DSE08LA4	1660	6.3	2.4	Y	0.79	3.6	1.6	1.6	1.9	0.0015	
1.5	DSE08XA4	1660	8.4	3.1	Y	0.81	3.6	1.6	1.5	1.8	0.0017	
2	DSE09SA4	1660	11.5	3.8	Y	0.86	4.2	1.8	1.6	2	0.00245	ES(X)010 ES(X)027
2.6	DSE09LA4	1660	15.3	5	Y	0.86	4.3	1.9	1.8	2.2	0.0032	
3	DSE09XA4	1680	17	5.5	Y	0.83	4.8	2.4	2.2	2.6	0.0038	
4.5	DSE11SA4	1700	25	7.8	D	0.85	4.9	2	1.8	2.5	0.0081	ES(X)027 ES(X)040 ES(X)070
6	DSE11MA4	1700	34	10.5	D	0.86	4.7	2.2	1.8	2.4	0.0105	
7.5	DSE11LA4	1720	41.5	12.7	D	0.86	5.8	2.4	2.1	2.9	0.014	
11	DSE13MA4	1730	63	19	D	0.85	5.3	2.2	2	2.4	0.029	ES(X)040 ES(X)070 ES(X)125
13.5	DSE13LA4	1730	71	25	D	0.84	5.4	2.4	2	2.4	0.0345	
15	DSE16MB4	1750	82	26	D	0.83	4.9	2.2	1.6	2.2	0.057	ES(X)125 ES(X)200 ZS(X)300
22	DSE16LB4	1750	123	37	D	0.86	5	1.8	1.6	2.1	0.076	
24	DSE16XB4	1750	131	41	D	0.84	5.2	2.1	1.9	2.4	0.087	
33	DSE18LB4	1750	180	53	D	0.87	5.4	2.2	1.8	2	0.16	ES(X)250 ZS(X)500
37	DSE18XB4	1760	205	60	D	0.86	5.4	2.7	2.1	2.5	0.195	

P_N	Rated power
n_N	Guideline value for rated speed at the rotor shaft
M_N	Rated torque at the rotor shaft
I_N	Rated current (the current can be converted in inverse ratio to the voltages for the desired special voltage)
cosφ	Power factor
I_A/I_N	Relative starting current
M_A/M_N	Relative starting torque
M_S/M_N	Relative pull-up torque
M_K/M_N	Relative breakdown torque
J_{rot}	Mass moment of inertia of the rotor
Brake	Brake dimensioning see chapter "Motor Mounted Components-Dimensions"

The standard motor winding configuration is for 460 V / 60 Hz.

See “www.bauergears.com” for more information.

Technical data of the 60 Hz motors

60 Hz

4-pole motors for intermittent periodic duty (S3/S6) and 60 Hz mains frequency

P_N kW	ED	Type	n_N 1/min	M_N Nm	I_N (460 V) A	Connection	cosφ	I_A/I_N	M_A/M_N	M_S/M_N	M_K/M_N	J_{rot} kgm²
0.15	15%	D04LA4	1620	0.87	0.56	Y	0.77	2.2	1.8	1.7	1.8	0.000175
0.3	15%	D05LA4	1620	1.75	0.9	Y	0.75	2.8	2.1	2	2.1	0.000295
0.3	60%	D06LA4	1620	1.75	0.9	Y	0.75	2.8	2.1	2	2.1	0.000295
0.55	60%	D07LA4	1620	3.2	1.78	Y	0.86	3.7	1.8	1.6	1.8	0.000385
0.75	60%	D08MA4	1680	4.2	1.84	Y	0.81	3.7	1.8	1.5	1.9	0.00115
1.1	60%	D08LA4	1680	6.2	2.5	Y	0.82	3.6	1.6	1.5	1.9	0.0015
1.5	60%	D09SA4	1680	8.5	3.3	Y	0.84	4.3	1.9	1.6	2.2	0.00245
2.2	60%	D09LA4	1680	12.5	4.5	Y	0.86	4.3	1.8	1.6	2.1	0.0032
3	60%	D09XA4	1680	16.6	6.2	Y	0.86	3.7	1.9	1.8	2.1	0.0038
4	60%	D11SA4	1710	22	8.1	Δ	0.85	4.4	1.8	1.5	2.2	0.0081
5.5	60%	D11MA4	1710	30.5	10.7	Δ	0.87	4.7	1.6	1.6	2.2	0.0105
7.5	60%	D11LA4	1710	41.5	14.6	Δ	0.87	5	2	1.9	2.3	0.014
9.5	60%	D13MA4	1710	53	17.3	Δ	0.87	5.4	2.1	1.8	2.4	0.029
11	60%	D13LA4	1710	60	20	Δ	0.84	6	2.6	2.3	2.7	0.0335
13.5	60%	D16MB4	1760	73	25.5	Δ	0.84	6.1	2.3	1.8	2.2	0.057
18.5	60%	D16LB4	1760	100	35	Δ	0.84	5.6	2.1	1.8	2.3	0.076
22	60%	D16XB4	1760	120	42	Δ	0.84	5.9	2.3	1.4	2.2	0.087
30	60%	D18LB4	1760	163	53	Δ	0.89	4.9	2	1.6	1.9	0.16
37	60%	D18XB4	1760	200	68	Δ	0.85	6	2.7	2.2	2.5	0.195

P_N	Rated power
ED	Duty cycle
n_N	Guideline value for rated speed at the rotor shaft
M_N	Rated torque at the rotor shaft
I_N	Rated current (the current can be converted in inverse ratio to the voltages for the desired special voltage)
cosφ	Power factor
I_A/I_N	Relative starting current
M_A/M_N	Relative starting torque
M_S/M_N	Relative pull-up torque
M_K/M_N	Relative breakdown torque
J_{rot}	Mass moment of inertia of the rotor

The standard motor winding configuration is for 460 V / 60 Hz.

See “www.bauergears.com“ for additional information.

Technical data of the 60 Hz motors

60 Hz

4/2-pole motors Δ/YY for continuous operation S1, line frequency 60 Hz

P_N	Type	n_N	M_N	I_N (460 V)	cosφ	I_A/I_N	M_A/M_N	M_S/M_N	M_K/M_N	J_{rot}
kW		1/min	Nm	A						kgm²
0.03/0.06	D04LA42	1620/3240	0.160/0.170	0.200/0.230	0.56/0.67	2.4/3.4	3.8/3.4	3.8/3.4	4.0/3.7	0.000175
0.04/0.08	D04LA42	1620/3240	0.230/0.230	0.230/0.260	0.60/0.75	2.2/3.1	3.3/2.3	3.3/2.3	3.7/2.4	0.000175
0.06/0.12	D05LA42	1620/3240	0.350/0.350	0.420/0.420	0.50/0.75	3.1/3.6	3.4/2.2	3.3/2.1	4.2/2.9	0.000295
0.08/0.16	D05LA42	1620/3240	0.470/0.470	0.460/0.460	0.55/0.75	3.1/3.6	3.1/2.0	3.0/1.9	3.8/2.5	0.000295
0.06/0.12	D06LA42	1620/3240	0.350/0.350	0.420/0.420	0.50/0.75	3.1/3.6	3.4/2.2	3.3/2.1	4.2/2.9	0.000295
0.08/0.16	D06LA42	1620/3240	0.470/0.470	0.46/0.460	0.55/0.75	3.1/3.6	3.1/2.0	3.0/1.9	3.8/2.5	0.000295
0.11/0.22	D06LA42	1620/3240	0.64/0.64	0.63/0.63	0.55/0.75	3.1/3.6	3.1/2.0	3.0/1.9	3.8/2.5	0.000295
0.16/0.32	D06LA42	1620/3240	0.94/0.94	0.82/0.82	0.57/0.80	3.1/3.6	2.8/1.9	2.7/1.8	3.4/2.3	0.000295
0.2/0.4	D07LA42	1680/3360	1.12/1.14	1.04/1.08	0.58/0.81	3.2/3.9	3.1/1.8	3.0/1.5	3.3/2.2	0.000385
0.28/0.56	D08MA42	1680/3360	1.58/1.58	1.10/1.60	0.61/0.81	3.7/3.2	2.5/1.7	2.5/1.5	3.3/2.1	0.00115
0.4/0.8	D08LA42	1680/3360	2.2/2.2	1.40/1.74	0.6/0.90	5.1/5.6	3.0/2.0	2.6/1.9	3.4/2.3	0.0015
0.5/1.0	D09SA42	1680/3360	2.8/2.8	1.60/2.6	0.71/0.91	5.5/4.6	3.4/2.2	3.4/2.2	4.2/2.6	0.00245
0.7/1.4	D09SA42	1680/3360	3.9/3.9	1.93/3.1	0.71/0.93	5.1/4.5	2.8/1.8	2.8/1.8	3.4/2.2	0.00245
1.0/2.0	D09LA42	1680/3360	5.6/5.6	2.8/4.3	0.72/0.94	5.1/4.5	2.8/1.8	2.8/1.8	3.4/2.2	0.0032
1.2/2.4	D09XA42	1680/3360	6.8/6.7	3.4/5.2	0.65/0.87	6.8/3.3	2.7/2.0	2.7/2.0	3.4/2.5	0.0038
1.4/2.8	D11SA42	1710/3420	7.8/7.8	3.3/5.7	0.74/0.90	7.0/4.9	3.3/1.9	2.8/1.6	4.5/3.1	0.0081
2.0/4.0	D11MA42	1710/3420	11.2/11.1	51./8.4	0.70/0.90	7.3/5.9	3.4/2.3	3.0/1.8	4.1/2.8	0.0105
2.5/5.0	D11LA42	1710/3420	14/14	5.0/9.1	0.79/0.92	6./5.0	3.1/2.0	3.0/1.9	4.1/2.8	0.014
3.5/7.0	D13MA42	1710/3420	19.1/19.1	7.5/13.5	0.76/0.91	7.4/5.7	3.7/2.2	3.1/2.0	4.2/3.0	0.029
4.5/9.0	D13LA42	1710/3420	25/25	9.6/17.3	0.76/0.91	7.4/6.0	3.5/2.1	2.8/1.9	3.8/2.7	0.0345
5.5/11	D16MB42	1760/3520	30/29.5	12.4/22.5	0.73/0.91	7.3/5.7	3.1/1.9	2.4/1.3	3.5/2.5	0.057
7.0/14	D16LB42	1760/3520	37.5/37.5	14.1/26	0.78/0.92	7.9/6.0	3.4/2.3	2.7/1.5	3.6/2.8	0.076
9.0/18	D16XB42	1760/3520	48.5/48.5	17.6/34	0.79/0.92	8.7/6.4	3.1/2.0	2.4/1.3	3.4/2.4	0.087
12.5/25	D18LB42	1760/3520	68/67	26.5/45.5	0.77/0.89	9.3/7.7	4.3/3.1	3.7/2.1	4.2/3.3	0.16
16/32	D18XB42	1760/3520	86/86	35/60	0.77/0.89	8.5/7.1	4.1/2.8	3.4/2.0	3.9/3.1	0.195

P_N	Rated power
n_N	Guideline value for rated speed at the rotor shaft
M_N	Rated torque at the rotor shaft
I_N	Rated current (the current can be converted in inverse ratio to the voltages for the desired special voltage)
cosφ	Power factor
I_A/I_N	Relative starting current
M_A/M_N	Relative starting torque
M_S/M_N	Relative pull-up torque
M_K/M_N	Relative breakdown torque
J_{rot}	Mass moment of inertia of the rotor

The standard motor winding configuration is for 460 V / 60 Hz.

See “www.bauergears.com“ for additional information.

Technical data of the 60 Hz motors

60 Hz

8/4-pole motors Δ/YY for continuous operation S1, line frequency 60 Hz

P_N	Type	n_N	M_N	I_N (460 V)	cosφ	I_A/I_N	M_A/M_N	M_S/M_N	M_K/M_N	J_{rot}
kW		1/min	Nm	A						kgm^2
0.03/0.06	D05LA84	810/1620	0.340/0.350	0.280/0.260	0.52/0.71	1.8/2.8	3.0/2.1	1.8/1.9	1.8/1.9	0.000295
0.03/0.06	D06LA84	810/1620	0.340/0.350	0.280/0.260	0.52/0.71	1.8/2.8	3.0/2.1	1.8/1.9	1.8/1.9	0.000295
0.04/0.08	D06LA84	810/1620	0.450/0.460	0.440/0.370	0.52/0.66	1.5/2.4	2.9/2.3	1.8/1.9	1.8/1.9	0.000295
0.06/0.12	D07LA84	810/1620	0.70/0.70	0.65/0.55	0.52/0.66	1.9/3.1	3.5/1.9	3.5/1.7	3.6/2.3	0.000385
0.06/0.12	D08LA84	840/1680	0.67/0.67	0.460/0.460	0.61/0.83	3.1/4.1	3.4/2.5	3.4/2.5	3.9/3.2	0.0025
0.08/0.16	D08LA84	840/1680	0.90/0.90	0.57/0.57	0.61/0.83	3.1/4.1	3.3/2.4	3.3/2.4	3.9/3.3	0.0025
0.11/0.22	D08LA84	840/1680	1.24/1.25	0.74/0.74	0.61/0.83	3.1/4.1	3.1/2.3	3.1/2.3	3.7/3.1	0.0025
0.14/0.28	D08LA84	840/1680	1.58/1.59	0.92/0.92	0.61/0.83	3.1/4.1	3.1/2.3	3.1/2.3	3.7/3.1	0.0025
0.2/0.4	D08LA84	840/1680	2.2/2.2	1.05/1.20	0.55/0.77	3.1/4.1	2.5/1.9	2.5/1.9	3.0/2.5	0.0025
0.25/0.5	D09XC84	840/1680	2.8/2.8	1.28/1.28	0.48/0.77	3.2/5.5	3.0/2.2	3.0/2.3	3.4/3.0	0.006
0.28/0.56	D09XC84	840/1680	3.1/3.1	1.29/1.38	0.57/0.80	3.2/5.4	2.7/2.0	2.7/2.1	3.1/2.7	0.006
0.4/0.8	D09XC84	840/1680	4.5/4.5	1.80/2.2	0.55/0.79	3.1/4.6	2.5/1.9	2.5/2.0	3.0/2.5	0.006
0.5/1.0	D09XC84	840/1680	5.6/5.6	2.2/2.4	0.55/0.81	2.9/4.4	2.4/1.8	2.4/1.8	2.8/2.4	0.006
0.8/1.6	D11LC84	850/1710	8.9/8.9	2.8/3.8	0.63/0.88	3.8/4.7	2.4/2.1	2.4/1.9	3.1/3.0	0.0215
1.1/2.2	D11LC84	850/1710	12.2/12.2	3.7/4.5	0.58/0.85	4.3/6.2	2.5/2.3	2.5/1.9	3.0/2.7	0.0215
1.6/3.2	D11LC84	850/1710	17.9/17.9	5.5/7.0	0.59/0.84	4.1/5.6	2.4/2.0	2.3/1.6	2.8/2.5	0.0215
2.2/4.4	D13LC84	850/1710	24/24	6.6/8.7	0.60/0.87	4.7/5.9	2.3/1.9	2.3/1.5	3.2/3.1	0.046
2.8/5.6	D13LC84	850/1710	31/31	8.6/11.2	0.60/0.86	4.7/5.9	2.3/1.9	2.3/1.5	3.2/3.1	0.046
3.5/7.0	D16MB84	880/1760	38/38	12.7/14.2	0.59/0.84	3.6/5.4	2.3/2.0	2.0/1.5	2.3/2.4	0.057
5.0/10	D16LB84	880/1760	54/54	16.1/18.9	0.57/0.87	3.9/6.1	2.3/2.0	2.1/1.5	2.3/2.4	0.076
7.0/14	D16XB84	880/1760	76/75	22.5/26.5	0.60/0.84	3.6/5.7	2.3/2.1	2.2/1.8	2.3/2.6	0.087
8.0/16	D18LB84	880/1760	87/86	22/30	0.60/0.86	4.1/6.0	2.4/2.4	2.0/2.0	2.1/2.3	0.16
10/20	D18XB84	880/1760	108/108	27.5/37.5	0.60/0.86	4.1/6.0	2.4/2.4	2.0/2.0	2.1/2.3	0.195

P_N	Rated power
n_N	Guideline value for rated speed at the rotor shaft
M_N	Rated torque at the rotor shaft
I_N	Rated current (the current can be converted in inverse ratio to the voltages for the desired special voltage)
cosφ	Power factor
I_A/I_N	Relative starting current
M_A/M_N	Relative starting torque
M_S/M_N	Relative pull-up torque
M_K/M_N	Relative breakdown torque
J_{rot}	Mass moment of inertia of the rotor

The standard motor winding configuration is for 460 V / 60 Hz.

See “www.bauergears.com“ for additional information.

Technical data of the 60 Hz motors

60 Hz

8/2-pole Y/Y motors for intermittent periodic duty S3 25/75 % and 60 Hz mains frequency

P_N kW	ED	Type	n_N 1/min	M_N Nm	I_N (460 V) A	cosφ	I_A/I_N	M_A/M_N	M_S/M_N	M_K/M_N	J_{rot} kgm²
0.04/0.16	25/75 %	D05LA82	680/2700	0.56/0.56	0.400/0.80	0.63/0.75	1.6/3.2	1.9/2.2	1.9/2.1	2.0/2.3	0.000295
0.05/0.20	25/75 %	D06LA82	680/2700	0.70/0.70	0.51/1.02	0.63/0.75	1.4/2.8	1.7/2.0	1.7/1.9	1.8/2.1	0.000295
0.063/0.25	25/75 %	D07LA82	650/2840	0.87/0.87	0.60/1.20	0.69/0.62	1.4/2.6	1.6/1.4	1.6/1.4	1.8/2.7	0.000385
0.071/0.28	25/75 %	D07LA82	650/2840	0.99/0.98	0.65/1.40	0.69/0.68	1.4/2.6	1.5/1.3	1.5/1.3	1.7/2.6	0.000385
0.063/0.25	25/75 %	D08LA82	700/2800	0.85/0.85	0.55/0.70	0.55/0.87	2.8/4.0	2.4/2.6	2.4/2.5	2.8/3.0	0.0015
0.09/0.36	25/75 %	D08LA82	700/2800	1.22/1.22	0.70/1.05	0.60/0.92	2.9/4.5	2.0/2.6	2.0/2.5	2.4/2.9	0.0015
0.12/0.5	25/75 %	D08LA82	700/2800	1.70/1.70	0.95/1.43	0.60/0.92	2.9/4.5	2.0/2.6	2.0/2.5	2.4/2.9	0.0015
0.16/0.63	25/75 %	D08LA82	700/2800	2.1/2.1	1.20/1.45	0.63/0.90	2.0/4.6	1.8/2.1	1.8/2.0	2.2/2.4	0.0015
0.25/1.0	25/75 %	D09XA82	700/2800	3.4/3.4	1.30/2.3	0.62/0.90	2.2/5.2	1.9/2.3	1.9/2.3	2.0/2.6	0.0038
0.3/1.4	25/75 %	D09XA82	700/2800	4.9/4.8	2.1/3.3	0.57/0.87	2.0/4.5	1.9/2.1	1.9/2.1	2.0/2.4	0.0038
0.45/1.8	25/75 %	D09XA82	700/2800	6.1/6.1	2.4/4.3	0.65/0.89	2.0/4.3	1.7/2.0	1.7/2.0	2.0/2.5	0.0038
0.56/2.2	25/75 %	D11LA82	710/2840	7.5/7.3	2.3/4.7	0.60/0.94	3.2/4.9	1.9/2.9	1.9/2.4	2.2/2.9	0.014
0.71/2.8	25/75 %	D11LA82	710/2840	9.5/9.4	2.8/5.6	0.58/0.94	2.5/4.7	1.9/2.3	1.9/2.0	2.1/2.4	0.014
0.90/3.6	25/75 %	D11LA82	710/2840	12.1/12.1	3.5/7.9	0.58/0.94	2.5/4.5	1.8/2.0	1.8/1.8	2.0/2.1	0.014
1.10/4.5	25/75 %	D13LA82	710/2840	14.7/15.1	4.0/10.1	0.59/0.90	2.8/5.4	1.8/2.5	1.8/1.8	2.3/2.7	0.0345
1.25/5.0	25/75 %	D13LA82	710/2840	16.8/16.8	4.5/11.5	0.59/0.88	2.9/5.4	1.6/2.3	1.6/1.8	2.1/2.7	0.0345
1.6/6.3	25/75 %	D16XB82	730/2920	20/20.5	7.6/13.5	0.48/0.88	3.6/6.5	2.4/3.0	2.2/2.1	2.7/3.0	0.087
2.0/8.0	25/75 %	D16XB82	730/2920	25.5/26	9.5/17	0.50/0.89	3.6/6.1	2.4/3.0	2.1/2.0	2.7/3.0	0.087
2.8/11	25/75 %	D16XB82	730/2920	36.6/36	11.5/24	0.53/0.91	3.0/5.9	1.8/2.9	1.6/2.0	1.9/2.8	0.087
3.6/14	25/75 %	D18XB82	730/2920	47/45.5	13.6/30.5	0.55/0.91	3.3/4.9	1.7/2.2	1.6/1.5	2.1/2.4	0.195
4.0/16	25/75 %	D18XB82	730/2920	52/52	15.1/34.5	0.55/0.91	3.3/4.9	1.7/2.2	1.6/1.5	2.1/2.4	0.195
5.0/20	25/75 %	D18XB82	730/2920	65/65	18.8/43	0.55/0.91	3.3/4.9	1.7/2.2	1.6/1.5	2.1/2.4	0.195

P_N	Rated power
ED	Duty cycle
n_N	Guideline value for rated speed at the rotor shaft
M_N	Rated torque at the rotor shaft
I_N	Rated current (the current can be converted in inverse ratio to the voltages for the desired special voltage)
cosφ	Power factor
I_A/I_N	Relative starting current
M_A/M_N	Relative starting torque
M_S/M_N	Relative pull-up torque
M_K/M_N	Relative breakdown torque
J_{rot}	Mass moment of inertia of the rotor

The standard motor winding configuration is for 460 V / 60 Hz.

See “www.bauergears.com“ for additional information.

14

Technical data of the 60 Hz motors

60 Hz

12/2-pole motors Y/Y for intermittent periodic duty S3-25/75 %, line frequency 60 Hz

P_N kW	ED	Type	n_N 1/min	M_N Nm	I_N (460 V) A	cosφ	I_A/I_N	M_A/M_N	M_S/M_N	M_K/M_N	J_{rot} kgm²
0.045/0.28	25/75 %	D08LA122	560/3360	0.76/0.79	0.51/0.79	0.70/0.90	1.5/4.9	2.1/2.7	2.1/2.7	2.1/3.0	0.0015
0.063/0.40	25/75 %	D08LA122	560/3360	1.07/1.13	0.61/1.02	0.70/0.90	1.5/4.9	1.9/2.4	1.9/2.4	1.9/2.7	0.0015
0.09/0.56	25/75 %	D08LA122	560/3360	1.54/1.59	0.95/1.35	0.63/0.89	1.5/4.5	1.9/2.3	1.9/2.5	2.0/2.6	0.0015
0.11/0.71	25/75 %	D09XA122	560/3360	1.88/2.0	1.00/1.50	0.59/0.88	1.6/6.0	1.9/3.0	1.9/2.9	2.0/3.6	0.0038
0.16/1.0	25/75 %	D09XA122	560/3360	2.7/2.8	1.56/2.2	0.62/0.89	1.6/6.0	2.0/2.9	2.0/2.7	2.0/3.6	0.0038
0.2/1.25	25/75 %	D09XA122	560/3360	3.4/3.5	1.85/2.8	0.62/0.89	1.6/5.5	1.9/2.6	1.9/2.5	1.9/3.4	0.0038
0.25/1.6	25/75 %	D11LA122	560/3420	4.2/4.4	2.1/3.1	0.53/0.95	1.8/5.4	1.9/2.8	1.9/2.6	2.2/3.1	0.014
0.32/2.0	25/75 %	D11LA122	560/3420	5.4/5.5	2.7/3.6	0.53/0.94	1.8/5.1	1.9/2.7	1.9/2.4	2.2/3.0	0.014
0.45/2.8	25/75 %	D11LA122	560/3420	7.6/7.8	3.8/5.1	0.52/0.94	1.8/5.1	1.6/2.5	1.6/2.2	2.0/2.6	0.014
0.63/4.0	25/75 %	D13LA122	560/3420	10.7/11.1	3.8/7.9	0.45/0.95	1.8/6.1	1.8/2.6	1.8/2.0	2.0/3.0	0.0345
0.80/5.0	25/75 %	D13LA122	560/3420	13.5/14	5.8/10.3	0.41/0.92	1.9/5.8	1.6/3.0	1.6/2.1	2.2/3.2	0.0345
1.0/6.3	25/75 %	D16XB122	590/3520	16.3/16.6	7.3/12.2	0.35/0.90	2.4/6.9	2.1/3.0	2.1/1.9	2.6/3.1	0.087
1.25/8.0	25/75 %	D16XB122	590/3520	20/21.5	9.0/15.4	0.35/0.90	2.4/6.9	2.1/3.0	2.1/1.8	2.6/3.1	0.087
1.6/10	25/75 %	D16XB122	590/3520	25/26.5	9.6/19.1	0.40/0.92	2.1/5.9	1.8/2.6	1.8/1.5	2.3/2.6	0.087
2.4/14	25/75 %	D18XB122	590/3520	39/37.5	15.1/28.5	0.39/0.91	2.0/4.7	1.8/2.8	1.9/2.2	2.1/2.8	0.195
2.5/16	60/60 %	D18XB122	590/3520	40.5/43	14.1/28.5	0.46/0.92	2.0/5.9	1.8/2.7	1.5/1.6	1.8/2.8	0.195
2.8/18	10/40 %	D18XB122	590/3520	45.5/48	17.6/36	0.39/0.91	2.0/4.7	1.8/2.8	1.9/2.2	2.1/2.8	0.195

P_N	Rated power
ED	Duty cycle
n_N	Guideline value for rated speed at the rotor shaft
M_N	Rated torque at the rotor shaft
I_N	Rated current (the current can be converted in inverse ratio to the voltages for the desired special voltage)
cosφ	Power factor
I_A/I_N	Relative starting current
M_A/M_N	Relative starting torque
M_S/M_N	Relative pull-up torque
M_K/M_N	Relative breakdown torque
J_{rot}	Mass moment of inertia of the rotor

The standard motor winding configuration is for 460 V / 60 Hz.

See “www.bauergears.com“ for additional information.

Operation with frequency converter, 50 Hz

50 Hz

IE1 Motor torques for frequency-converter range 5 Hz - 70 Hz, line frequency 50 Hz

P_N	Type	Connec-tion	5 Hz M	10 Hz M	20 Hz M	30 Hz M	50 Hz M	60 Hz M	70 Hz M	5 Hz I	10 Hz I	20 Hz I	30 Hz I	50 Hz I	60 Hz I	70 Hz I
kW			Nm	Nm	Nm	Nm	Nm	Nm	Nm	A	A	A	A	A	A	A
0.03	D04LA4	Y	0.125	0.155	0.185	0.205	0.21	0.21	0.18	0.19	0.193	0.198	0.2	0.2	0.23	0.23
0.04	D04LA4	Y	0.165	0.21	0.25	0.275	0.28	0.275	0.205	0.19	0.193	0.198	0.2	0.2	0.23	0.2
0.06	D04LA4	Y	0.25	0.315	0.375	0.41	0.42	0.42	0.32	0.29	0.295	0.3	0.3	0.3	0.34	0.305
0.09	D04LA4	Y	0.375	0.47	0.56	0.62	0.63	0.63	0.52	0.435	0.44	0.45	0.45	0.45	0.51	0.495
0.11	D04LA4	Y	0.465	0.58	0.7	0.77	0.78	0.67	0.495	0.41	0.425	0.44	0.45	0.45	0.45	0.435
0.06	D05LA4	Y	0.25	0.315	0.375	0.41	0.42	0.42	0.36	0.3	0.315	0.34	0.35	0.35	0.395	0.4
0.09	D05LA4	Y	0.375	0.47	0.56	0.62	0.63	0.63	0.54	0.355	0.365	0.375	0.38	0.38	0.43	0.43
0.06	D06LA4	Y	0.25	0.315	0.375	0.41	0.42	0.42	0.36	0.3	0.315	0.34	0.35	0.35	0.395	0.4
0.09	D06LA4	Y	0.375	0.47	0.56	0.62	0.63	0.63	0.54	0.355	0.365	0.375	0.38	0.38	0.43	0.43
0.12	DSE04LA4	Y	0.52	0.65	0.78	0.85	0.87	0.67	0.495	0.45	0.45	0.45	0.45	0.45	0.45	0.45
0.18	DSE05LA4	Y	0.76	0.96	1.15	1.26	1.28	1.28	0.97	0.6	0.61	0.63	0.63	0.63	0.72	0.64
0.2	DSE05LA4	Y	0.85	1.06	1.27	1.4	1.42	1.35	0.99	0.62	0.63	0.65	0.66	0.66	0.72	0.66
0.25	DSE05LA4	Y	1.05	1.31	1.57	1.72	1.75	1.59	1.17	0.86	0.87	0.87	0.87	0.87	0.9	0.87
0.18	DSE06LA4	Y	0.76	0.96	1.15	1.26	1.28	1.28	1.02	0.6	0.61	0.63	0.63	0.63	0.72	0.67
0.2	DSE06LA4	Y	0.85	1.06	1.27	1.4	1.42	1.35	0.99	0.61	0.63	0.64	0.65	0.65	0.71	0.65
0.25	DSE06LA4	Y	1.05	1.31	1.57	1.72	1.75	1.59	1.17	0.86	0.87	0.87	0.87	0.87	0.9	0.87
0.37	DSE07LA4	Y	1.59	1.98	2.3	2.6	2.6	2.5	1.85	1.13	1.14	1.15	1.15	1.15	1.24	1.15
0.55	DSE08MA4	Y	2.2	2.8	3.3	3.7	3.8	3.8	2.8	1.29	1.35	1.41	1.45	1.45	1.64	1.47
0.75	DSE08LA4	Y	3	3.8	4.5	5	5.1	5.1	3.9	1.7	1.79	1.89	1.95	1.95	2.2	1.97
1.1	DSE08XA4	Y	4.5	5.6	6.7	7.4	7.5	7.1	5.2	2.5	2.6	2.8	2.8	2.8	3.1	2.8
1.1	DSE09SA4	Y	4.5	5.6	6.7	7.4	7.5	7.5	6.4	2.2	2.4	2.5	2.6	2.6	3	3
1.5	DSE09LA4	Y	6	7.5	9	9.9	10.1	10.1	8.6	3	3.2	3.4	3.5	3.5	4	4
2.2	DSE09XA4	Y	9	11.2	13.5	14.8	15	15	12.4	3.9	4.2	4.7	4.9	4.9	5.6	5.4
3	DSE11SA4	Y	12	15	18	19.7	20	20	17.1	5.1	5.5	6.1	6.4	6.4	7.3	7.3
4	DSE11MA4	Y	16.2	20	24	26.5	27	27	23	6.4	7.1	7.9	8.4	8.4	9.5	9.5
5.5	DSE11LA4	Y	22	27.5	33	36.5	37	37	31.5	8.2	9.3	10.5	11.2	11.3	12.8	12.8
7.5	DSE13MA4	Y	30	37.5	45	49	50	50	42.5	11.4	12.8	14.3	15.2	15.3	17.3	17.3
9.5	DSE13LA4	Y	37.5	47	56	62	63	63	54	14.1	15.9	17.8	19.1	19.2	22	22
11	DSE16MB4	Y	43	54	64	71	72	72	61	16.3	18.4	21	22.5	22.5	25.5	25.5
15	DSE16LB4	Y	58	73	88	96	98	98	84	20.5	24	27.5	29.5	29.5	33.5	33.5
18.5	DSE16XB4	Y	72	90	108	119	121	121	103	27	30.5	34.5	37	37	42	42
22	DSE18LB4	Y	86	108	129	142	144	144	123	28	33	38	41.5	41.5	47	47
30	DSE18XB4	Y	117	147	176	193	196	196	168	39	45	52	56	56	64	64

P_N Rated power

M Permissible load torque (S1-100 %) at the rotor shaft by operation with a frequency inverter

I Load current for operation with frequency inverter

Field weakening for frequencies above 50 Hz, winding for standard voltage **400 V Y / 50 Hz**, Temperature Class F.ation with frequency inverter

Motors with standard windings can be switched from Y- to Δ- circuit for operation with a converter having a single-phase mains connection. This has no effect on the torques and frequencies as listed in the table above. As regards the choice of converter, however, note that currents are higher than those of the Y-circuit by a factor of 1.73.

The load currents in the table are guideline values for selecting the size of frequency inverter. Load current is lower if the load torque is below the values permitted for 30-70 Hz and the frequency inverter used is of the high-grade type. This means that a smaller inverter can sometimes be used, particularly in conjunction with large motors.

Operation with frequency converter, 50 Hz

50 Hz

IE1 Motor torques for frequency-converter range 5 Hz - 100 Hz, line frequency 50 Hz

P_N	Type	Connection	5 Hz	8.7 Hz	10 Hz	20 Hz	87 Hz	100 Hz	5 Hz	8.7 Hz	10 Hz	20 Hz	87 Hz	100 Hz
			M	M	M	M	M	M	I	I	I	I	I	I
kW			Nm	Nm	Nm	Nm	Nm	Nm	A	A	A	A	A	A
0.03	D04LA4	D	0.125	0.15	0.155	0.185	0.21	0.21	0.33	0.335	0.335	0.345	0.35	0.38
0.04	D04LA4	D	0.165	0.2	0.21	0.25	0.28	0.28	0.33	0.335	0.335	0.345	0.35	0.38
0.06	D04LA4	D	0.25	0.3	0.315	0.375	0.42	0.42	0.51	0.51	0.51	0.52	0.52	0.57
0.09	D04LA4	D	0.375	0.45	0.47	0.56	0.63	0.63	0.76	0.76	0.77	0.78	0.78	0.86
0.11	D04LA4	D	0.465	0.56	0.58	0.7	0.78	0.73	0.71	0.73	0.73	0.76	0.78	0.81
0.06	D05LA4	D	0.25	0.3	0.315	0.375	0.42	0.42	0.52	0.54	0.55	0.59	0.61	0.67
0.09	D05LA4	D	0.375	0.45	0.47	0.56	0.63	0.63	0.62	0.63	0.63	0.65	0.66	0.73
0.09	D05LA4	D	0.375	0.45	0.47	0.56	0.63	0.63	0.62	0.63	0.63	0.65	0.66	0.73
0.06	D06LA4	D	0.25	0.3	0.315	0.375	0.42	0.42	0.52	0.54	0.55	0.59	0.61	0.67
0.09	D06LA4	D	0.375	0.45	0.47	0.56	0.63	0.63	0.62	0.63	0.63	0.65	0.66	0.73
0.12	DSE04LA4	D	0.52	0.62	0.65	0.78	0.87	0.74	0.78	0.78	0.78	0.78	0.78	0.78
0.18	DSE05LA4	D	0.76	0.92	0.96	1.15	1.28	1.28	1.04	1.06	1.06	1.08	1.1	1.2
0.2	DSE05LA4	D	0.85	1.02	1.06	1.27	1.42	1.42	1.06	1.09	1.09	1.13	1.15	1.26
0.25	DSE05LA4	D	1.05	1.25	1.31	1.57	1.75	1.73	1.49	1.5	1.5	1.51	1.51	1.65
0.18	DSE06LA4	D	0.76	0.92	0.96	1.15	1.28	1.28	1.04	1.06	1.06	1.08	1.1	1.2
0.2	DSE06LA4	D	0.85	1.02	1.06	1.27	1.42	1.42	1.06	1.08	1.08	1.11	1.13	1.24
0.25	DSE06LA4	D	1.05	1.25	1.31	1.57	1.75	1.73	1.49	1.5	1.5	1.51	1.51	1.65
0.37	DSE07LA4	D	1.59	1.9	1.98	2.3	2.6	2.6	1.95	1.96	1.97	1.98	2	2.2
0.55	DSE08MA4	D	2.2	2.7	2.8	3.3	3.8	3.8	2.2	2.4	2.4	2.5	2.6	2.8
0.75	DSE08LA4	D	3	3.6	3.8	4.5	5.1	5.1	3	3.1	3.1	3.3	3.4	3.8
1.1	DSE08XA4	D	4.5	5.4	5.6	6.7	7.5	7.5	4.3	4.5	4.5	4.7	4.9	5.4
1.1	DSE09SA4	D	4.5	5.4	5.6	6.7	7.5	7.5	3.8	4	4.1	4.4	4.5	5
1.5	DSE09LA4	D	6	7.2	7.5	9	10.1	10.1	5.1	5.4	5.4	5.8	6.1	6.7
2.2	DSE09XA4	D	9	10.7	11.2	13.5	15	15	6.8	7.3	7.4	8.1	8.5	9.4
3	DSE11SA4	D	12	14.3	15	18	20	20	8.7	9.4	9.6	10.5	11.1	12.2
4	DSE11MA4	D	16.2	19.4	20	24	27	27	11	12	12.2	13.6	14.6	16
5.5	DSE11LA4	D	22	26.5	27.5	33	37	37	14.2	15.7	16.1	18.2	19.6	21.5
7.5	DSE13MA4	D	30	36	37.5	45	50	50	19.8	22	22.5	25	27	29.5
9.5	DSE13LA4	D	37.5	45	47	56	63	63	24.5	27	27.5	31	33.5	36.5
11	DSE16MB4	D	43	51	54	64	72	72	28.5	31.5	32	36.5	39	43
15	DSE16LB4	D	58	70	73	88	98	98	35.5	40	41	47	52	57
18.5	DSE16XB4	D	72	87	90	108	121	121	46.5	52	53	60	65	71
22	DSE18LB4	D	86	103	108	129	144	144	48.5	55	57	66	72	79
30	DSE18XB4	D	117	141	147	176	196	196	67	76	78	89	97	107

P_N	Rated power
M	Permissible load torque (S1-100 %) at the rotor shaft by operation with a frequency inverter
I	Load current for operation with frequency inverter

Field weakening for frequencies above 87 Hz, winding for
230 V Δ/ 50 Hz (U_{max} = 400 V Δ/87 Hz), Temperature Class F.

The load currents in the table are guideline values for selecting the size of frequency inverter. Load current is lower if the load torque is below the values permitted for 30-100 Hz and the frequency inverter used is of the high-grade type. This means that a smaller inverter can sometimes be used, particularly in conjunction with large motors.

Operation with frequency converter, 50 Hz

50 Hz

IE2 Motor torques for frequency-converter range 5 Hz - 70 Hz, line frequency 50 Hz

P_N	Type	Connec-tion	5 Hz	10 Hz	20 Hz	30 Hz	50 Hz	60 Hz	70 Hz	5 Hz	10 Hz	20 Hz	30 Hz	50 Hz	60 Hz	70 Hz
			M	M	M	M	M	M	M	I	I	I	I	I	I	I
kW			Nm	Nm	Nm	Nm	Nm	Nm	Nm	A	A	A	A	A	A	A
0.12	DHE05LA4	Y	0.49	0.61	0.73	0.81	0.82	0.82	0.65	0.36	0.37	0.385	0.39	0.39	0.44	0.415
0.18	DHE05LA4	Y	0.75	0.93	1.12	1.23	1.25	1.25	1.03	0.53	0.54	0.56	0.57	0.57	0.65	0.63
0.12	DHE06LA4	Y	0.495	0.62	0.74	0.81	0.83	0.83	0.66	0.36	0.37	0.385	0.39	0.39	0.44	0.415
0.18	DHE06LA4	Y	0.75	0.93	1.12	1.23	1.25	1.25	1.03	0.54	0.55	0.57	0.58	0.58	0.66	0.64
0.25	DHE07LA4	Y	1.04	1.3	1.56	1.71	1.74	1.74	1.49	0.7	0.72	0.75	0.76	0.76	0.86	0.86
0.3	DHE07LA4	Y	1.26	1.57	1.89	2	2.1	2.1	1.8	0.82	0.85	0.88	0.9	0.9	1.02	1.02
0.37	DHE08MA4	Y	1.47	1.83	2.2	2.4	2.4	2.4	2.1	0.99	1.03	1.07	1.1	1.1	1.25	1.25
0.55	DHE08LA4	Y	2.2	2.8	3.3	3.6	3.7	3.7	3	1.15	1.23	1.32	1.38	1.38	1.56	1.51
0.75	DHE08XA4	Y	3	3.8	4.5	4.9	5	5	4.2	1.6	1.7	1.81	1.88	1.88	2.2	2.2
0.75	DHE09SA4	Y	3	3.8	4.5	4.9	5	5	4.2	1.54	1.63	1.73	1.8	1.8	2.1	2.1
1.1	DHE09LA4	Y	4.3	5.4	6.5	7.2	7.3	7.3	6.2	2.1	2.2	2.5	2.6	2.6	2.9	2.9
1.5	DHE09XA4	Y	5.9	7.4	8.9	9.8	9.9	9.9	8.5	2.7	2.9	3.2	3.4	3.4	3.8	3.8
2.2	DHE09XA4C	Y	8.7	10.8	13	14.3	14.5	14.5	12.4	3.8	4.2	4.5	4.8	4.8	5.4	5.4
2.2	DHE09XB4	Y	8.8	11.1	13.3	14.6	14.8	14.8	12.6	3.7	4	4.5	4.7	4.7	5.4	5.4
2.2	DHE11SA4	Y	8.7	10.8	13	14.3	14.5	14.5	12.4	3.6	3.9	4.4	4.6	4.6	5.2	5.3
3	DHE11MA4	Y	12	15	18	19.7	20	20	17.1	4.9	5.4	5.9	6.3	6.3	7.2	7.2
4	DHE11LA4	Y	15.9	19.8	23.5	26	26.5	26.5	22.5	6.9	7.4	8	8.4	8.4	9.5	9.5
5.5	DHE11LA4C	Y	21.5	27	32	35.5	36	36	30.5	8.2	9.2	10.3	11	11	12.5	12.5
5.5	DHE11LB4	Y	21.5	27	32	35.5	36	36	30.5	8.3	9.2	10.3	11	11	12.5	12.5
5.5	DHE13MA4	Y	21.5	27	32	35.5	36	36	30.5	8.2	9.2	10.3	11	11	12.5	12.5
7.5	DHE13LA4	Y	29	36.5	44	48	49	49	42	11.2	12.6	14.1	15	15.1	17.1	17.1
9.5	DHE16MB4	Y	37	46.5	55	61	62	62	53	14.8	16.5	18.4	19.6	19.7	22.5	22.5
11	DHE16LB4	Y	42.5	53	64	70	71	71	61	17.2	19	21.5	22.5	22.5	25.5	25.5
15	DHE16XB4	Y	58	73	87	96	97	97	83	24	26.5	29.5	31	31	35	35.5
18.5	DHE18LB4	Y	72	90	108	118	120	120	102	25	28.5	32.5	35	35	39.5	40
22	DHE18XB4	Y	85	106	127	140	142	142	121	33.5	37	41	43.5	43.5	49.5	49.5

P_N Rated power

M Permissible load torque (S1-100 %) at the rotor shaft by operation with a frequency inverter

I Load current for operation with frequency inverter

Field weakening for frequencies above 50 Hz, winding for standard voltage **400 V Y / 50 Hz**, Temperature Class F.

Motors with standard windings can be switched from Y- to Δ- circuit for operation with a converter having a single-phase mains connection. This has no effect on the torques and frequencies as listed in the table above. As regards the choice of converter, however, note that currents are higher than those of the Y-circuit by a factor of 1.73.

The load currents in the table are guideline values for selecting the size of frequency converter. Load current is lower if the load torque is below the values permitted for 30-70 Hz and the frequency inverter used is of the high-grade type. This means that a smaller inverter can sometimes be used, particularly in conjunction with large motors.

Operation with frequency converter, 50 Hz

50 Hz

IE2 Motor torques for frequency-converter range 5 Hz - 100 Hz, line frequency 50 Hz

P_N	Type	Connec-tion	5 Hz M	8.7 Hz M	10 Hz M	20 Hz M	87 Hz M	100 Hz M	5 Hz I	8.7 Hz I	10 Hz I	20 Hz I	87 Hz I	100 Hz I
kW			Nm	Nm	Nm	Nm	Nm	Nm	A	A	A	A	A	A
0.12	DHE05LA4	D	0.51	0.61	0.63	0.76	0.85	0.85	0.68	0.69	0.7	0.72	0.73	0.8
0.12	DHE05LA4	D	0.49	0.59	0.61	0.73	0.82	0.82	0.62	0.64	0.64	0.67	0.68	0.75
0.18	DHE05LA4	D	0.76	0.92	0.96	1.15	1.28	1.28	0.95	0.98	0.98	1.02	1.04	1.14
0.18	DHE05LA4	D	0.75	0.89	0.93	1.12	1.25	1.25	0.91	0.93	0.94	0.97	0.99	1.09
0.12	DHE06LA4	D	0.51	0.61	0.63	0.76	0.85	0.85	0.68	0.69	0.7	0.72	0.73	0.8
0.12	DHE06LA4	D	0.495	0.59	0.62	0.74	0.83	0.83	0.62	0.64	0.64	0.67	0.68	0.75
0.18	DHE06LA4	D	0.76	0.92	0.96	1.15	1.28	1.28	0.94	0.97	0.97	1	1.03	1.13
0.18	DHE06LA4	D	0.75	0.89	0.93	1.12	1.25	1.25	0.93	0.95	0.95	0.99	1.01	1.11
0.25	DHE07LA4	D	1.05	1.25	1.31	1.57	1.75	1.75	1.22	1.25	1.26	1.32	1.36	1.49
0.25	DHE07LA4	D	1.04	1.25	1.3	1.56	1.74	1.74	1.2	1.23	1.24	1.29	1.32	1.45
0.3	DHE07LA4	D	1.26	1.51	1.57	1.89	2.1	2.1	1.42	1.46	1.47	1.52	1.56	1.71
0.37	DHE08MA4	D	1.47	1.76	1.83	2.2	2.4	2.4	1.72	1.78	1.79	1.86	1.91	2.1
0.37	DHE08MA4	D	1.47	1.76	1.83	2.2	2.4	2.4	1.72	1.77	1.78	1.86	1.91	2.1
0.55	DHE08LA4	D	2.2	2.6	2.8	3.3	3.7	3.7	1.95	2.1	2.1	2.2	2.4	2.6
0.55	DHE08LA4	D	2.2	2.6	2.8	3.3	3.7	3.7	1.99	2.1	2.2	2.3	2.4	2.7
0.75	DHE08XA4	D	3	3.6	3.8	4.5	5	5	2.8	2.9	3	3.2	3.3	3.6
0.75	DHE09SA4	D	3	3.6	3.8	4.5	5	5	2.7	2.8	2.8	3	3.2	3.5
1.1	DHE09LA4	D	4.3	5.2	5.4	6.5	7.3	7.3	3.6	3.8	3.9	4.2	4.5	4.9
1.5	DHE09XA4	D	5.9	7.1	7.4	8.9	9.9	9.9	4.6	5	5.1	5.5	5.9	6.4
2.2	DHE09XA4C	D	8.7	10.4	10.8	13	14.5	14.5	6.7	7.1	7.2	7.8	8.3	9.1
2.2	DHE09XB4	D	8.8	10.6	11.1	13.3	14.8	14.8	6.4	6.9	7	7.7	8.2	9
2.2	DHE11SA4	D	8.7	10.4	10.8	13	14.5	14.5	6.2	6.7	6.8	7.5	8	8.8
3	DHE11MA4	D	12	14.3	15	18	20	20	8.4	9.1	9.3	10.3	11	12
4	DHE11LA4	D	15.9	19	19.8	23.5	26.5	26.5	11.9	12.6	12.8	13.9	14.6	16
5.5	DHE11LA4C	D	21.5	25.5	27	32	36	36	14.2	15.6	15.9	17.8	19.1	21
5.5	DHE11LB4	D	21.5	25.5	27	32	36	36	14.3	15.6	15.9	17.8	19.1	21
5.5	DHE13MA4	D	21.5	25.5	27	32	36	36	14.1	15.5	15.8	17.7	19.1	21
7.5	DHE13LA4	D	29	35	36.5	44	49	49	19.3	21.5	22	24.5	26.5	29
9.5	DHE16MB4	D	37	44.5	46.5	55	62	62	26	28	29	32	34.5	37.5
11	DHE16LB4	D	42.5	51	53	64	71	71	30	32.5	33	36.5	39	43
15	DHE16XB4	D	58	70	73	87	97	97	41.5	45	46	51	54	59
18.5	DHE18LB4	D	72	86	90	108	120	120	43.5	48	49.5	56	61	67
22	DHE18XB4	D	85	102	106	127	142	142	58	63	64	71	76	83

P_N	Rated power
M	Permissible load torque (S1-100 %) at the rotor shaft by operation with a frequency inverter
I	Load current for operation with frequency inverter

Field weakening for frequencies above 87 Hz, winding for
230 V Δ/ 50 Hz (U_{max} = 400 V Δ/87 Hz), Temperature Class F.

The load currents in the table are guideline values for selecting the size of frequency inverter. Load current is lower if the load torque is below the values permitted for 30-100 Hz and the frequency inverter used is of the high-grade type. This means that a smaller inverter can sometimes be used, particularly in conjunction with large motors.

Operation with frequency converter, 50 Hz

50 Hz

IE3 Motor torques for frequency-converter range 5 Hz - 70 Hz. line frequency 50 Hz

P	Type	Connec-tion	5 Hz	10 Hz	20 Hz	30 Hz	50 Hz	60 Hz	70 Hz	5 Hz	10 Hz	20 Hz	30 Hz	50 Hz	60 Hz	70 Hz
			M	M	M	M	M	M	M	I	I	I	I	I	I	I
kW			Nm	Nm	Nm	Nm	Nm	Nm	Nm	A	A	A	A	A	A	A
0.12	DPE05LA4	Y	0.49	0.61	0.73	0.81	0.82	0.82	0.7	0.37	0.38	0.395	0.4	0.4	0.455	0.455
0.12	DPE06LA4	Y	0.49	0.61	0.73	0.81	0.82	0.82	0.7	0.38	0.39	0.405	0.41	0.41	0.465	0.465
0.18	DPE07LA4	Y	0.73	0.92	1.1	1.21	1.23	1.23	1.05	0.52	0.53	0.55	0.56	0.56	0.64	0.64
0.25	DPE08MA4	Y	0.99	1.24	1.49	1.63	1.66	1.66	1.42	0.62	0.65	0.69	0.71	0.71	0.81	0.81
0.37	DPE08LA4	Y	1.47	1.83	2.2	2.4	2.4	2.4	2.1	0.92	0.96	1	1.03	1.03	1.17	1.17
0.55	DPE08XA4	Y	2.1	2.7	3.2	3.6	3.6	3.6	3.1	1.19	1.26	1.35	1.4	1.4	1.58	1.59
0.75	DPE08XB4	Y	3	3.8	4.5	4.9	5	5	4.2	1.57	1.67	1.78	1.85	1.86	2.1	2.2
0.75	DPE09LA4	Y	3	3.8	4.5	4.9	5	5	4.2	1.3	1.43	1.57	1.66	1.67	1.89	1.89
1.1	DPE09XA4	Y	4.3	5.4	6.5	7.2	7.3	7.3	6.2	1.9	2.1	2.3	2.4	2.4	2.8	2.8
1.5	DPE09XB4	Y	6	7.5	9	9.8	10	10	8.5	2.6	2.8	3.1	3.2	3.2	3.7	3.7
2.2	DPE09XB4C	Y	8.7	10.8	13	14.3	14.5	14.5	12.4	3.8	4.1	4.5	4.7	4.7	5.4	5.4
2.2	DPE11MA4	Y	8.7	10.8	13	14.3	14.5	14.5	12.4	3.5	3.9	4.3	4.6	4.6	5.2	5.3
3	DPE11LA4	Y	11.8	14.7	17.7	19.4	19.7	19.7	16.8	4.8	5.3	5.9	6.2	6.2	7	7.1
4	DPE11LB4	Y	15.9	19.8	23.5	26	26.5	26.5	22.5	5.7	6.4	7.3	7.8	7.8	8.8	8.9
5.5	DPE11LB4C	Y	21.5	27	32	35.5	36	36	30.5	8.3	9.2	10.3	11	11	12.5	12.5
4	DPE13MA4	Y	15.6	19.5	23	25.5	26	26	22	5.8	6.6	7.4	8	8	9.1	9.1
5.5	DPE13LA4	Y	21.5	27	32	35.5	36	36	30.5	8.9	9.8	10.8	11.5	11.5	13	13.1
7.5	DPE13XA4	Y	29	36.5	44	48	49	49	42	11.5	12.8	14.2	15.1	15.2	17.2	17.2
9.5	DPE16LB4	Y	36.5	45.5	54	60	61	61	52	14.3	16	17.8	19	19.1	22	22
11	DPE16LB4	Y	42.5	53	63	70	71	71	60	16.5	18.4	20.5	22	22	25	25
15	DPE16XB4	Y	58	72	87	95	97	97	83	23	25.5	28.5	30.5	30.5	34.5	34.5
18.5	DPE18LB4	Y	71	89	107	117	119	119	102	26	29.5	33	35.5	35.5	40.5	40.5
22	DPE18XB4	Y	85	106	127	140	142	142	121	29.5	34	38.5	41.5	41.5	47	47
30	DPE20LA4	Y	117	146	175	192	195	195	167	37.5	43	49.5	54	54	61	62
37	DPE22SA4	Y	144	180	215	235	240	240	205	43.5	51	60	65	65	74	74

P_N	Rated power
M	Permissible load torque (S1-100 %) at the rotor shaft by operation with a frequency inverter
I	Load current for operation with frequency inverter

Field weakening for frequencies above 50 Hz, winding for standard voltage **400 V Y / 50 Hz**, Temperature Class F.

Motors with standard windings can be switched from Y- to Δ- circuit for operation with a converter having a single-phase mains connection. This has no effect on the torques and frequencies as listed in the table above. As regards the choice of converter, however, note that currents are higher than those of the Y-circuit by a factor of 1.73.

The load currents in the table are guideline values for selecting the size of frequency converter. Load current is lower if the load torque is below the values permitted for 30-70 Hz and the frequency inverter used is of the high-grade type. This means that a smaller inverter can sometimes be used, particularly in conjunction with large motors.

Operation with frequency converter, 50 Hz

50 Hz

IE3 Motor torques for frequency-converter range 5 Hz - 100 Hz, line frequency 50 Hz

P	Type	Connection	5 Hz	8.7 Hz	10 Hz	20 Hz	87 Hz	100 Hz	5 Hz	8.7 Hz	10 Hz	20 Hz	87 Hz	100 Hz
			M	M	M	M	M	M	I	I	I	I	I	I
kW			Nm	Nm	Nm	Nm	Nm	Nm	A	A	A	A	A	A
0.12	DPE05LA4	D	0.49	0.59	0.61	0.73	0.82	0.82	0.64	0.66	0.66	0.68	0.7	0.76
0.12	DPE06LA4	D	0.49	0.59	0.61	0.73	0.82	0.82	0.66	0.67	0.68	0.7	0.72	0.78
0.18	DPE07LA4	D	0.73	0.88	0.92	1.1	1.23	1.23	0.89	0.91	0.92	0.95	0.97	1.07
0.25	DPE08MA4	D	0.99	1.19	1.24	1.49	1.66	1.66	1.07	1.11	1.13	1.19	1.23	1.35
0.37	DPE08LA4	D	1.47	1.76	1.83	2.2	2.4	2.4	1.59	1.64	1.66	1.73	1.79	1.96
0.55	DPE08XA4	D	2.1	2.6	2.7	3.2	3.6	3.6	2.1	2.2	2.2	2.4	2.5	2.7
0.75	DPE08XB4	D	3	3.6	3.8	4.5	5	5	2.8	2.8	2.9	3.1	3.2	3.6
0.75	DPE09LA4	D	3	3.6	3.8	4.5	5	5	2.2	2.5	2.5	2.8	2.9	3.2
1.1	DPE09XA4	D	4.3	5.2	5.4	6.5	7.3	7.3	3.3	3.6	3.6	4	4.2	4.6
1.5	DPE09XB4	D	6	7.1	7.5	9	10	10	4.4	4.8	4.9	5.3	5.7	6.2
2.2	DPE09XB4C	D	8.7	10.4	10.8	13	14.5	14.5	6.5	7	7.1	7.7	8.2	9
2.2	DPE11MA4	D	8.7	10.4	10.8	13	14.5	14.5	6.1	6.6	6.7	7.5	8	8.8
3	DPE11LA4	D	11.8	14.1	14.7	17.7	19.7	19.7	8.3	9	9.1	10.1	10.8	11.8
4	DPE11LB4	D	15.9	19	19.8	23.5	26.5	26.5	9.9	10.9	11.1	12.5	13.6	14.9
5.5	DPE11LB4C	D	21.5	25.5	27	32	36	36	14.3	15.6	15.9	17.8	19.1	21
4	DPE13MA4	D	15.6	18.7	19.5	23	26	26	10	11.1	11.4	12.8	13.9	15.2
5.5	DPE13LA4	D	21.5	25.5	27	32	36	36	15.3	16.6	16.9	18.7	20	22
7.5	DPE13XA4	D	29	35	36.5	44	49	49	19.9	22	22.5	25	26.5	29
9.5	DPE16LB4	D	36.5	43.5	45.5	54	61	61	25	27.5	28	31	33.5	36.5
11	DPE16LB4	D	42.5	51	53	63	71	71	29	31.5	32	35.5	38.5	42
15	DPE16XB4	D	58	69	72	87	97	97	40	43.5	44.5	49.5	53	58
18.5	DPE18LB4	D	71	85	89	107	119	119	45	49.5	51	57	62	68
22	DPE18XB4	D	85	102	106	127	142	142	52	57	59	67	72	79
30	DPE20LA4	D	117	140	146	175	195	195	65	73	75	86	94	103
37	DPE22SA4	D	144	172	180	215	240	240	76	86	88	103	113	124

P_N	Rated power
M	Permissible load torque (S1-100 %) at the rotor shaft by operation with a frequency inverter
I	Load current for operation with frequency inverter

Field weakening for frequencies above 87 Hz, winding for
230 V Δ / 50 Hz (Umax = 400 V Δ / 87 Hz), Temperature Class F.

The load currents in the table are guideline values for selecting the size of frequency inverter. Load current is lower if the load torque is below the values permitted for 30-100 Hz and the frequency inverter used is of the high-grade type. This means that a smaller inverter can sometimes be used, particularly in conjunction with large motors.

Operation with frequency converter, 60 Hz

60 Hz

IE1 Motor torques for frequency-converter range 6 Hz - 84 Hz. line frequency 60 Hz

P_N	Type	Connec-tion	6 Hz M	12 Hz M	24 Hz M	36 Hz M	60 Hz M	72 Hz M	84 Hz M	6 Hz I	12 Hz I	24 Hz I	36 Hz I	60 Hz I	72 Hz I	84 Hz I
kW			Nm	Nm	Nm	Nm	Nm	Nm	Nm	A	A	A	A	A	A	A
0.03	D04LA4	Y	0.115	0.14	0.165	0.18	0.18	0.18	0.15	0.176	0.178	0.18	0.185	0.18	0.205	0.205
0.04	D04LA4	Y	0.145	0.18	0.215	0.235	0.23	0.23	0.18	0.176	0.178	0.18	0.185	0.18	0.205	0.19
0.06	D04LA4	Y	0.22	0.275	0.325	0.355	0.35	0.35	0.3	0.275	0.275	0.28	0.29	0.28	0.32	0.32
0.09	D04LA4	Y	0.33	0.41	0.485	0.53	0.52	0.52	0.445	0.4	0.4	0.4	0.415	0.4	0.455	0.455
0.11	D04LA4	Y	0.38	0.48	0.57	0.63	0.64	0.64	0.57	0.42	0.42	0.42	0.42	0.42	0.465	0.475
0.12	D04LA4	Y	0.445	0.55	0.65	0.71	0.7	0.63	0.465	0.41	0.415	0.42	0.435	0.42	0.435	0.415
0.06	D05LA4	Y	0.22	0.275	0.325	0.355	0.35	0.35	0.3	0.28	0.295	0.315	0.33	0.32	0.365	0.365
0.09	D05LA4	Y	0.33	0.41	0.485	0.53	0.52	0.52	0.445	0.335	0.34	0.35	0.36	0.35	0.395	0.4
0.12	D05LA4	Y	0.445	0.55	0.65	0.71	0.7	0.7	0.53	0.345	0.36	0.375	0.395	0.38	0.43	0.385
0.18	D05LA4	Y	0.67	0.83	0.99	1.08	1.06	1.06	0.87	0.54	0.56	0.58	0.6	0.58	0.66	0.64
0.25	D05LA4	Y	0.92	1.14	1.36	1.48	1.45	1.45	1.15	0.78	0.79	0.8	0.83	0.8	0.91	0.85
0.06	D06LA4	Y	0.22	0.275	0.325	0.355	0.35	0.35	0.3	0.28	0.295	0.315	0.33	0.32	0.365	0.365
0.09	D06LA4	Y	0.33	0.41	0.485	0.53	0.52	0.52	0.445	0.335	0.34	0.35	0.36	0.35	0.395	0.4
0.12	D06LA4	Y	0.445	0.55	0.65	0.71	0.7	0.7	0.53	0.345	0.36	0.375	0.395	0.38	0.43	0.385
0.18	D06LA4	Y	0.67	0.83	0.99	1.08	1.06	1.06	0.87	0.54	0.56	0.58	0.6	0.58	0.66	0.64
0.25	D06LA4	Y	0.92	1.14	1.36	1.48	1.45	1.45	1.15	0.78	0.79	0.8	0.83	0.8	0.91	0.85
0.3	D07LA4	Y	1.12	1.38	1.65	1.8	1.76	1.76	1.5	1.18	1.19	1.2	1.24	1.2	1.36	1.36
0.37	D07LA4	Y	1.37	1.69	2	2.2	2.1	2.1	1.64	1.24	1.25	1.26	1.3	1.26	1.43	1.28
0.37	D08MA4	Y	1.31	1.61	1.92	2.1	2	2	1.75	0.93	0.97	1.01	1.05	1.02	1.16	1.16
0.55	DSE08MA4	Y	1.86	2.3	2.8	3	3.1	3.1	2.8	1.14	1.19	1.25	1.28	1.28	1.42	1.45
0.75	DSE08LA4	Y	2.5	3.1	3.8	4.1	4.2	4.2	3.8	1.51	1.59	1.69	1.75	1.75	1.94	1.98
1.1	DSE08XA4	Y	3.7	4.6	5.5	6.1	6.2	6.2	5.2	2.2	2.3	2.4	2.5	2.5	2.8	2.6
1.1	DSE09SA4	Y	3.6	4.5	5.4	5.9	6	6	5.4	1.96	2.1	2.2	2.3	2.3	2.6	2.6
1.5	DSE09LA4	Y	5	6.1	7.4	8.1	8.2	8.2	7.4	2.6	2.8	3	3.1	3.1	3.5	3.6
2.2	DSE09XA4	Y	7.3	9.1	10.9	12	12.2	12.2	10.9	3.5	3.8	4.1	4.3	4.3	4.8	4.9
3	DSE11SA4	Y	9.8	12.3	14.7	16.2	16.4	16.4	14.7	4.3	4.7	5.2	5.5	5.5	6.1	6.3
4	DSE11MA4	Y	13.1	16.4	19.7	21.5	21.5	21.5	19.7	5.4	6.1	6.8	7.2	7.2	8	8.2
5.5	DSE11LA4	Y	18.1	22.5	27	29.5	30	30	27	7.3	8.1	9.1	9.7	9.7	10.8	11
7.5	DSE13MA4	Y	24.5	30.5	36.5	40	41	41	36.5	10	11.1	12.4	13.2	13.3	14.8	15.1
9.5	DSE13LA4	Y	31	39	46.5	51	52	52	46.5	12.2	13.7	15.4	16.5	16.6	18.4	18.8
11	DSE16MB4	Y	35.5	44.5	53	58	59	59	53	14	15.8	17.9	19.2	19.3	21.5	22
15	DSE16LB4	Y	48.5	60	72	80	81	81	72	17.7	20.5	23.5	25.5	25.5	28.5	29
18.5	DSE16XB4	Y	60	75	90	98	100	100	90	23.5	26.5	30	32	32	35.5	36.5
22	DSE18LB4	Y	72	90	108	118	120	120	108	24.5	28.5	33	36	36	40	41
30	DSE18XB4	Y	97	121	145	160	162	162	145	34.5	39.5	45	48.5	49	55	56

P_N Rated power

M Permissible load torque (S1-100 %) at the rotor shaft by operation with a frequency inverter

I Load current for operation with frequency inverter

Field weakening for frequencies above 60 Hz, winding for standard voltage **460 V Y / 60 Hz**, Temperature Class F.

Motors with standard windings can be switched from Y- to Δ- circuit for operation with a converter having a single-phase mains connection. This has no effect on the torques and frequencies as listed in the table above. As regards the choice of converter, however, note that currents are higher than those of the Y-circuit by a factor of 1.73.

The load currents in the table are guideline values for selecting the size of frequency converter. Load current is lower if the load torque is below the values permitted for 36-84 Hz and the frequency inverter used is of the high-grade type. This means that a smaller inverter can sometimes be used, particularly in conjunction with large motors.

Operation with frequency converter, 60 Hz

60 Hz

IE1 Motor torques for frequency-converter range 6 Hz - 120 Hz. line frequency 60 Hz

P_N	Type	Connec-tion	6 Hz M	12 Hz M	24 Hz M	36 Hz M	104 Hz M	120 Hz M	6 Hz I	12 Hz I	24 Hz I	36 Hz I	104 Hz I	120 Hz I
kW			Nm	Nm	Nm	Nm	Nm	Nm	A	A	A	A	A	A
0.03	D04LA4	D	0.115	0.14	0.165	0.18	0.18	0.18	0.305	0.31	0.315	0.325	0.315	0.345
0.04	D04LA4	D	0.145	0.18	0.215	0.235	0.23	0.23	0.305	0.31	0.315	0.325	0.315	0.345
0.06	D04LA4	D	0.22	0.275	0.325	0.355	0.35	0.35	0.47	0.475	0.485	0.5	0.485	0.54
0.09	D04LA4	D	0.33	0.41	0.485	0.53	0.52	0.52	0.69	0.69	0.7	0.72	0.7	0.77
0.11	D04LA4	D	0.38	0.48	0.57	0.63	0.64	0.64	0.73	0.73	0.73	0.73	0.73	0.8
0.12	D04LA4	D	0.445	0.55	0.65	0.71	0.7	0.69	0.71	0.72	0.73	0.75	0.73	0.79
0.06	D05LA4	D	0.22	0.275	0.325	0.355	0.35	0.35	0.48	0.51	0.55	0.57	0.56	0.61
0.09	D05LA4	D	0.33	0.41	0.485	0.53	0.52	0.52	0.58	0.59	0.61	0.63	0.61	0.67
0.12	D05LA4	D	0.445	0.55	0.65	0.71	0.7	0.7	0.6	0.62	0.65	0.68	0.66	0.73
0.18	D05LA4	D	0.67	0.83	0.99	1.08	1.06	1.06	0.93	0.96	1	1.04	1.01	1.11
0.25	D05LA4	D	0.92	1.14	1.36	1.48	1.45	1.45	1.34	1.36	1.38	1.43	1.39	1.53
0.06	D06LA4	D	0.22	0.275	0.325	0.355	0.35	0.35	0.48	0.51	0.55	0.57	0.56	0.61
0.09	D06LA4	D	0.33	0.41	0.485	0.53	0.52	0.52	0.58	0.59	0.61	0.63	0.61	0.67
0.12	D06LA4	D	0.445	0.55	0.65	0.71	0.7	0.7	0.6	0.62	0.65	0.68	0.66	0.73
0.18	D06LA4	D	0.67	0.83	0.99	1.08	1.06	1.06	0.93	0.96	1	1.04	1.01	1.11
0.25	D06LA4	D	0.92	1.14	1.36	1.48	1.45	1.45	1.34	1.36	1.38	1.43	1.39	1.53
0.3	D07LA4	D	1.12	1.38	1.65	1.8	1.76	1.76	2.1	2.1	2.1	2.2	2.1	2.3
0.37	D07LA4	D	1.37	1.69	2	2.2	2.1	2.1	2.2	2.2	2.2	2.2	2.2	2.4
0.37	D08MA4	D	1.31	1.61	1.92	2.1	2	2	1.6	1.67	1.74	1.82	1.77	1.95
0.55	DSE08MA4	D	1.86	2.3	2.8	3	3.1	3.1	1.97	2.1	2.2	2.2	2.2	2.5
0.75	DSE08LA4	D	2.5	3.1	3.8	4.1	4.2	4.2	2.7	2.8	3	3.1	3.1	3.4
1.1	DSE08XA4	D	3.7	4.6	5.5	6.1	6.2	6.2	3.8	4	4.2	4.2	4.2	4.7
1.1	DSE09SA4	D	3.6	4.5	5.4	5.9	6	6	3.4	3.6	3.8	4	4	4.4
1.5	DSE09LA4	D	5	6.1	7.4	8.1	8.2	8.2	4.5	4.8	5.2	5.4	5.4	6
2.2	DSE09XA4	D	7.3	9.1	10.9	12	12.2	12.2	6	6.5	7.1	7.4	7.5	8.2
3	DSE11SA4	D	9.8	12.3	14.7	16.2	16.4	16.4	7.4	8.2	9	9.5	9.6	10.5
4	DSE11MA4	D	13.1	16.4	19.7	21.5	21.5	21.5	9.4	10.5	11.7	12.4	12.5	13.8
5.5	DSE11LA4	D	18.1	22.5	27	29.5	30	30	12.6	14.1	15.7	16.7	16.9	18.5
7.5	DSE13MA4	D	24.5	30.5	36.5	40	41	41	17.2	19.3	21.5	23	23.5	25.5
9.5	DSE13LA4	D	31	39	46.5	51	52	52	21.5	24	27	28.5	29	32
11	DSE16MB4	D	35.5	44.5	53	58	59	59	24.5	27.5	31	33.5	33.5	37
15	DSE16LB4	D	48.5	60	72	80	81	81	31	35.5	40.5	43.5	44	48.5
18.5	DSE16XB4	D	60	75	90	98	100	100	40.5	45.5	52	55	56	61
22	DSE18LB4	D	72	90	108	118	120	120	42	49	57	62	63	69
30	DSE18XB4	D	97	121	145	160	162	162	59	68	78	84	85	94

P_N Rated power

M Permissible load torque (S1-100 %) at the rotor shaft by operation with a frequency inverter

I Load current for operation with frequency inverter

Field weakening for frequencies above 87 Hz, winding for standard voltage 265 V Δ / 60 Hz (U_{max} = 460 V Δ / 104 Hz), Temperature Class F.

The load currents in the table are guideline values for selecting the size of frequency converter. Load current is lower if the load torque is below the values permitted for 36-120 Hz and the frequency inverter used is of the high-grade type. This means that a smaller inverter can sometimes be used, particularly in conjunction with large motors.

Operation with frequency converter, 60 Hz

60 Hz

IE2 Motor torques for frequency-converter range 5 Hz - 80 Hz, line frequency 60 Hz

P	Type	Connec-tion	5 Hz	10 Hz	20 Hz	30 Hz	60 Hz	70 Hz	80 Hz	5 Hz	10 Hz	20 Hz	30 Hz	60 Hz	70 Hz	80 Hz
			M	M	M	M	M	M	M	I	I	I	I	I	I	I
kW			Nm	Nm	Nm	Nm	Nm	Nm	Nm	A	A	A	A	A	A	A
0.12	DHE05LA4	Y	0.4	0.5	0.6	0.66	0.67	0.67	0.6	0.335	0.345	0.355	0.36	0.36	0.4	0.41
0.18	DHE05LA4	Y	0.6	0.75	0.9	0.99	1.01	1.01	0.9	0.485	0.5	0.51	0.52	0.52	0.58	0.59
0.12	DHE06LA4	Y	0.4	0.5	0.6	0.66	0.67	0.67	0.6	0.34	0.35	0.355	0.36	0.36	0.4	0.41
0.18	DHE06LA4	Y	0.6	0.75	0.9	0.99	1.01	1.01	0.9	0.495	0.51	0.52	0.53	0.53	0.59	0.6
0.25	DHE07LA4	Y	0.84	1.05	1.26	1.38	1.4	1.4	1.26	0.65	0.67	0.69	0.7	0.7	0.78	0.8
0.3	DHE07LA4	Y	1.02	1.27	1.53	1.67	1.7	1.7	1.53	0.76	0.78	0.81	0.82	0.82	0.91	0.93
0.37	DHE08MA4	Y	1.2	1.5	1.8	1.97	2	2	1.8	0.9	0.94	0.97	0.99	0.99	1.1	1.12
0.55	DHE08LA4	Y	1.83	2.2	2.7	3	3	3	2.7	1.05	1.11	1.18	1.23	1.23	1.37	1.39
0.75	DHE08XA4	Y	2.4	3.1	3.7	4.1	4.1	4.1	3.7	1.45	1.5	1.56	1.6	1.6	1.78	1.81
0.75	DHE09SA4	Y	2.4	3.1	3.7	4.1	4.1	4.1	3.7	1.34	1.43	1.53	1.6	1.6	1.78	1.81
1.1	DHE09LA4	Y	3.6	4.5	5.4	5.9	6	6	5.4	1.85	1.99	2.2	2.2	2.2	2.5	2.6
1.5	DHE09XA4	Y	4.9	6.1	7.3	8.1	8.2	8.2	7.3	2.4	2.6	2.8	3	3	3.3	3.4
2.2	DHE09XA4C	Y	7.2	9	10.8	11.8	12	12	10.8	3.3	3.6	3.8	4	4	4.5	4.5
2.2	DHE09XB4	Y	7.2	9	10.8	11.9	12.1	12.1	10.8	3.2	3.6	3.9	4.1	4.1	4.5	4.7
2.2	DHE11SA4	Y	7.2	9	10.8	11.8	12	12	10.8	3.1	3.5	3.8	4	4	4.5	4.5
3	DHE11MA4	Y	9.9	12.3	14.8	16.2	16.5	16.5	14.8	4.2	4.7	5.2	5.5	5.5	6.1	6.3
4	DHE11LA4	Y	13	16.2	19.5	21	21.5	21.5	19.5	6.2	6.6	7	7.3	7.3	8.1	8.3
5.5	DHE11LA4C	Y	18	22.5	27	29.5	30	30	27	7.2	8	8.9	9.5	9.5	10.6	10.8
5.5	DHE11LB4	Y	18	22.5	27	29.5	30	30	27	7.5	8.2	9.1	9.6	9.6	10.7	10.9
5.5	DHE13MA4	Y	18	22.5	27	29.5	30	30	27	7.3	8.1	9.1	9.7	9.7	10.8	11
7.5	DHE13LA4	Y	24	30	36	40	40.5	40.5	36	9.9	11	12.3	13.1	13.2	14.7	15
9.5	DHE16LB4	Y	30.5	38	45.5	50	51	51	45.5	12.4	13.9	15.4	16.4	16.5	18.3	18.7
11	DHE16LB4	Y	35	44	53	58	59	59	53	15	16.6	18.4	19.5	19.6	22	22.5
15	DHE16XB4	Y	48.5	60	72	80	81	81	72	21	23	25.5	27	27	30	31
18.5	DHE18LB4	Y	60	75	90	98	100	100	90	22	25.5	29	31	31	34.5	35.5
22	DHE18XB4	Y	70	88	106	116	118	118	106	29.5	32.5	36	38.5	38.5	43	43.5

P_N	Rated power
M	Permissible load torque (S1-100 %) at the rotor shaft by operation with a frequency inverter
I	Load current for operation with frequency inverter

Field weakening for frequencies above 60 Hz, winding for standard voltage **460 V Y / 60 Hz**, Temperature Class F.

Motors with standard windings can be switched from Y- to Δ- circuit for operation with a converter having a single-phase mains connection. This has no effect on the torques and frequencies as listed in the table above. As regards the choice of converter, however, note that currents are higher than those of the Y-circuit by a factor of 1.73.

The load currents in the table are guideline values for selecting the size of frequency converter. Load current is lower if the load torque is below the values permitted for 36-84 Hz and the frequency inverter used is of the high-grade type. This means that a smaller inverter can sometimes be used, particularly in conjunction with large motors.

Operation with frequency converter, 60 Hz

60 Hz

IE2 Motor torques for frequency-converter range 5 Hz - 120 Hz. line frequency 60 Hz

P	Typ	Connection	5 Hz	10 Hz	20 Hz	30 Hz	104 Hz	120 Hz	5 Hz	10 Hz	20 Hz	30 Hz	104 Hz	120 Hz
			M	M	M	M	M	M	I	I	I	I	I	I
kW			Nm	Nm	Nm	Nm	Nm	Nm	A	A	A	A	A	A
0.12	DHE05LA4	D	0.4	0.5	0.6	0.66	0.67	0.67	0.58	0.6	0.62	0.63	0.63	0.69
0.18	DHE05LA4	D	0.6	0.75	0.9	0.99	1.01	1.01	0.84	0.86	0.89	0.9	0.91	0.99
0.12	DHE06LA4	D	0.4	0.5	0.6	0.66	0.67	0.67	0.59	0.6	0.62	0.63	0.63	0.69
0.18	DHE06LA4	D	0.6	0.75	0.9	0.99	1.01	1.01	0.86	0.88	0.91	0.92	0.92	1.01
0.25	DHE07LA4	D	0.84	1.05	1.26	1.38	1.4	1.4	1.12	1.15	1.19	1.21	1.22	1.34
0.3	DHE07LA4	D	1.02	1.27	1.53	1.67	1.7	1.7	1.3	1.35	1.39	1.42	1.43	1.57
0.37	DHE08MA4	D	1.2	1.5	1.8	1.97	2	2	1.56	1.62	1.68	1.71	1.72	1.89
0.55	DHE08LA4	D	1.83	2.2	2.7	3	3	3	1.81	1.92	2.1	2.2	2.2	2.4
0.75	DHE08XA4	D	2.4	3.1	3.7	4.1	4.1	4.1	2.6	2.6	2.7	2.8	2.8	3.1
0.75	DHE09SA4	D	2.4	3.1	3.7	4.1	4.1	4.1	2.4	2.5	2.7	2.8	2.8	3.1
1.1	DHE09LA4	D	3.6	4.5	5.4	5.9	6	6	3.2	3.5	3.8	3.9	3.9	4.3
1.5	DHE09XA4	D	4.9	6.1	7.3	8.1	8.2	8.2	4.2	4.5	4.9	5.1	5.2	5.7
2.2	DHE09XA4C	D	7.2	9	10.8	11.8	12	12	5.7	6.1	6.6	6.9	7	7.7
2.2	DHE09XB4	D	7.2	9	10.8	11.9	12.1	12.1	5.7	6.2	6.7	7.1	7.2	7.9
2.2	DHE11SA4	D	7.2	9	10.8	11.8	12	12	5.4	5.9	6.5	6.9	7	7.7
3	DHE11MA4	D	9.9	12.3	14.8	16.2	16.5	16.5	7.4	8.1	9	9.5	9.6	10.5
4	DHE11LA4	D	13	16.2	19.5	21	21.5	21.5	10.7	11.4	12.2	12.6	12.7	13.9
5.5	DHE11LA4C	D	18	22.5	27	29.5	30	30	12.4	13.8	15.4	16.4	16.5	18.1
5.5	DHE11LB4	D	18	22.5	27	29.5	30	30	12.9	14.2	15.6	16.5	16.7	18.3
5.5	DHE13MA4	D	18	22.5	27	29.5	30	30	12.6	14.1	15.7	16.7	16.9	18.5
7.5	DHE13LA4	D	24	30	36	40	40.5	40.5	17.1	19.1	21.5	23	23	25.5
9.5	DHE16LB4	D	30.5	38	45.5	50	51	51	21.5	24	27	28.5	29	31.5
11	DHE16LB4	D	35	44	53	58	59	59	26	29	32	34	34	37.5
15	DHE16XB4	D	48.5	60	72	80	81	81	36.5	40	44	46.5	47	52
18.5	DHE18LB4	D	60	75	90	98	100	100	38	43.5	49.5	54	54	60
22	DHE18XB4	D	70	88	106	116	118	118	51	56	63	67	67	74

P_N	Rated power
M	Permissible load torque (S1-100 %) at the rotor shaft by operation with a frequency inverter
I	Load current for operation with frequency inverter

Field weakening for frequencies above 87 Hz, winding for standard voltage 265 V Δ / 60 Hz (U_{max} = 460 V Δ / 104 Hz), Temperature Class F.

The load currents in the table are guideline values for selecting the size of frequency converter. Load current is lower if the load torque is below the values permitted for 36-120 Hz and the frequency inverter used is of the high-grade type. This means that a smaller inverter can sometimes be used, particularly in conjunction with large motors.

Operation with frequency converter, 60 Hz

60 Hz

IE3 Motor torques for frequency-converter range 5 Hz - 80 Hz, line frequency 60 Hz

P	Type	Connec-tion	5 Hz	10 Hz	20 Hz	30 Hz	60 Hz	70 Hz	80 Hz	5 Hz	10 Hz	20 Hz	30 Hz	60 Hz	70 Hz	80 Hz
			M	M	M	M	M	M	M	I	I	I	I	I	I	I
kW			Nm	Nm	Nm	Nm	Nm	Nm	Nm	A	A	A	A	A	A	A
0.12	DPE05LA4	Y	0.4	0.5	0.6	0.66	0.67	0.67	0.6	0.345	0.355	0.365	0.37	0.37	0.41	0.42
0.12	DPE06LA4	Y	0.4	0.5	0.6	0.66	0.67	0.67	0.6	0.35	0.36	0.365	0.37	0.37	0.41	0.42
0.18	DPE07LA4	Y	0.6	0.75	0.9	0.98	1	1	0.9	0.48	0.495	0.51	0.52	0.52	0.58	0.59
0.25	DPE08MA4	Y	0.82	1.02	1.23	1.35	1.37	1.37	1.23	0.57	0.6	0.63	0.65	0.65	0.72	0.74
0.37	DPE08LA4	Y	1.2	1.5	1.8	1.97	2	2	1.8	0.85	0.88	0.92	0.94	0.94	1.05	1.07
0.55	DPE08XA4	Y	1.8	2.2	2.7	2.9	3	3	2.7	1.08	1.14	1.21	1.25	1.25	1.39	1.42
0.75	DPE08XB4	Y	2.4	3.1	3.7	4.1	4.1	4.1	3.7	1.43	1.51	1.61	1.67	1.67	1.85	1.89
0.75	DPE09LA4	Y	2.4	3	3.6	4	4.1	4.1	3.6	1.16	1.26	1.37	1.44	1.45	1.61	1.64
1.1	DPE09XB4	Y	3.6	4.5	5.4	5.9	6	6	5.4	1.8	1.94	2.1	2.2	2.2	2.5	2.5
1.5	DPE09XB4	Y	4.9	6.1	7.3	8.1	8.2	8.2	7.3	2.4	2.6	2.8	2.9	2.9	3.2	3.3
2.2	DPE11LB4	Y	7.1	8.9	10.7	11.7	11.9	11.9	10.7	2.8	3.1	3.5	3.7	3.7	4.1	4.2
3	DPE11LB4	Y	9.7	12.2	14.6	16.1	16.3	16.3	14.6	3.9	4.4	4.9	5.2	5.2	5.8	5.9
4	DPE11LB4	Y	13	16.2	19.5	21	21.5	21.5	19.5	5.2	5.8	6.5	6.9	6.9	7.7	7.8
4	DPE13MA4	Y	12.9	16.2	19.4	21	21.5	21.5	19.4	5.2	5.8	6.5	7	7	7.8	8
5.5	DPE13XA4	Y	17.7	22	26.5	29	29.5	29.5	26.5	7.2	8	8.9	9.5	9.5	10.6	10.8
7.5	DPE13XA4	Y	24	30	36	40	40.5	40.5	36	10.2	11.3	12.4	13.1	13.2	14.7	15
9.5	DPE16LB4	Y	30.5	38	45.5	50	51	51	45.5	12.7	14.1	15.6	16.6	16.7	18.5	18.9
11	DPE16LB4	Y	35	44	53	58	59	59	53	14.6	16.3	18.1	19.2	19.3	21.5	22
15	DPE16XB4	Y	48	60	72	79	80	80	72	19.9	22.5	24.5	26	26.5	29.5	30
18.5	DPE18LB4	Y	59	74	89	97	99	99	89	23	26	29	31	31	34.5	35.5
22	DPE18XB4	Y	70	88	106	116	118	118	106	26.5	30	34	36.5	36.5	40.5	41.5
30	DPE20LA4	Y	96	120	144	158	160	160	144	33.5	38	43.5	47	47	53	54
37	DPE22SA4	Y	120	150	180	197	200	200	180	39	45	52	56	57	63	64

P_N	Rated power
M	Permissible load torque (S1-100 %) at the rotor shaft by operation with a frequency inverter
I	Load current for operation with frequency inverter

Field weakening for frequencies above 60 Hz, winding for standard voltage **460 V Y / 60 Hz**, Temperature Class F.

Motors with standard windings can be switched from Y- to Δ- circuit for operation with a converter having a single-phase mains connection. This has no effect on the torques and frequencies as listed in the table above. As regards the choice of converter, however, note that currents are higher than those of the Y-circuit by a factor of 1.73.

The load currents in the table are guideline values for selecting the size of frequency converter. Load current is lower if the load torque is below the values permitted for 36-84 Hz and the frequency inverter used is of the high-grade type. This means that a smaller inverter can sometimes be used, particularly in conjunction with large motors.

Operation with frequency converter, 60 Hz

60 Hz

IE3 Motor torques for frequency-converter range 5 Hz - 120 Hz, line frequency 60 Hz

P	Type	Connection	5 Hz	10 Hz	20 Hz	30 Hz	104 Hz	120 Hz	5 Hz	10 Hz	20 Hz	30 Hz	104 Hz	120 Hz
			M	M	M	M	M	M	I	I	I	I	I	I
kW			Nm	Nm	Nm	Nm	Nm	Nm	A	A	A	A	A	A
0.12	DPE05LA4	D	0.4	0.5	0.6	0.66	0.67	0.67	0.6	0.62	0.63	0.64	0.65	0.71
0.12	DPE06LA4	D	0.4	0.5	0.6	0.66	0.67	0.67	0.61	0.62	0.64	0.64	0.65	0.71
0.18	DPE07LA4	D	0.6	0.75	0.9	0.98	1	1	0.83	0.86	0.89	0.9	0.91	0.99
0.25	DPE08MA4	D	0.82	1.02	1.23	1.35	1.37	1.37	0.99	1.04	1.09	1.13	1.13	1.24
0.37	DPE08LA4	D	1.2	1.5	1.8	1.97	2	2	1.47	1.52	1.59	1.63	1.63	1.79
0.55	DPE08XA4	D	1.8	2.2	2.7	2.9	3	3	1.87	1.98	2.1	2.2	2.2	2.4
0.75	DPE08XB4	D	2.4	3.1	3.7	4.1	4.1	4.1	2.5	2.7	2.8	2.9	2.9	3.2
0.75	DPE09LA4	D	2.4	3	3.6	4	4.1	4.1	2.1	2.2	2.4	2.5	2.6	2.8
1.1	DPE09XB4	D	3.6	4.5	5.4	5.9	6	6	3.2	3.4	3.7	3.8	3.8	4.2
1.5	DPE09XB4	D	4.9	6.1	7.3	8.1	8.2	8.2	4	4.4	4.8	5	5.1	5.6
2.2	DPE11LB4	D	7.1	8.9	10.7	11.7	11.9	11.9	4.7	5.3	6	6.4	6.5	7.1
3	DPE11LB4	D	9.7	12.2	14.6	16.1	16.3	16.3	6.7	7.5	8.4	9	9.1	9.9
4	DPE11LB4	D	13	16.2	19.5	21	21.5	21.5	8.9	10	11.2	11.9	12	13.2
4	DPE13MA4	D	12.9	16.2	19.4	21	21.5	21.5	8.9	10	11.3	12.1	12.2	13.4
5.5	DPE13XA4	D	17.7	22	26.5	29	29.5	29.5	12.4	13.8	15.4	16.4	16.5	18.1
7.5	DPE13XA4	D	24	30	36	40	40.5	40.5	17.6	19.5	21.5	23	23	25.5
9.5	DPE16LB4	D	30.5	38	45.5	50	51	51	22	24.5	27.5	29	29	32
11	DPE16LB4	D	35	44	53	58	59	59	25.5	28.5	31.5	33.5	33.5	37
15	DPE16XB4	D	48	60	72	79	80	80	34.5	38.5	42.5	45.5	45.5	50
18.5	DPE18LB4	D	59	74	89	97	99	99	39.5	44.5	50	54	54	60
22	DPE18XB4	D	70	88	106	116	118	118	45.5	52	59	63	64	70
30	DPE20LA4	D	96	120	144	158	160	160	58	66	75	81	82	90
37	DPE22SA4	D	120	150	180	197	200	200	67	78	90	97	98	108

P_N	Rated power
M	Permissible load torque (S1-100 %) at the rotor shaft by operation with a frequency inverter
I	Load current for operation with frequency inverter

Field weakening for frequencies above 87 Hz, winding for standard voltage 265 V Δ / 60 Hz (U_{max} = 460 V Δ / 104 Hz), Temperature Class F.

The load currents in the table are guideline values for selecting the size of frequency converter. Load current is lower if the load torque is below the values permitted for 36-120 Hz and the frequency inverter used is of the high-grade type. This means that a smaller inverter can sometimes be used, particularly in conjunction with large motors.

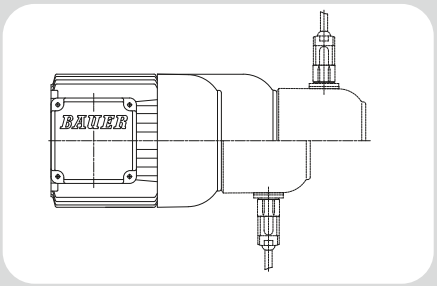

15

Motor Mounted Components

Brake **741**
Functional description 741
Product description of type ES(X) spring-actuated brakes 741
Product description of type ZS(X) spring-actuated brakes 742
Brake selection and sizing 743
Electrical connection 746
Specifications of holding brakes with emergency stop capability 749
Specifications of working brakes 750
Connection 752
DC connection via terminals (K) 752
Standard rectifier (S) 753
Rectifier for electronic rapid shutdown (E) 754
Standard rectifier (M) 755
Brake connection, operation with frequency converter 757
Brake connection, pole-changing motors 757
Manual release (HA, HN) 757
Explosion protection 757
Back stop (RR, RL) 757
Second motor shaft extension (ZW, ZV) 758
Protective fan cowl (D) 758
Motor-independent fan (FV) 758
Technical Data Motor-independent fan 758
Encoder System **759**
Shaft encoder (G) 759
Incremental rotary encoder **760**
Functional description 760
Electrical specifications 760
Plug end view with male pin insert 760
Signal assignments 760
Absolute rotary encoders **761**
Functional description 761
Profibus DP interface 761
SSI interface 762
Modular Motorsystem **763**
Motor and encoder 763
Motor, brake and encoder 763
Motor and forced ventilation 763

Functional description

The compression springs act on the anchor disc, which is free to move in the axial direction and presses the brake disc, which is keyed to the rotor shaft, against the friction plate or the motor bearing plate. This produces the braking torque.

When a DC voltage is applied to the coil in the electromagnet housing, it generates a magnetic force that opposes the spring force and causes the anchor disc to be pulled toward the electromagnet enclosure.

This releases the brake disc and disengages the brake.

Brakes are classified into two types according to how they are used: holding brakes and working brakes.

Holding brake ES.. / ZS..
brake that in normal operation does not convert kinetic energy into frictional energy but is only used to hold a mechanism in a particular position, but which can also be used for motion braking in an emergency.

Service brake ESX.. / ZSX..
A brake that converts kinetic energy into frictional energy in normal operation, which means that it brakes mechanical motion.
When a working brake is used as a holding brake, the braking torque tolerance of up to -30 % (in new condition) must be taken into account.

Product description of type ES(X) spring-actuated brakes

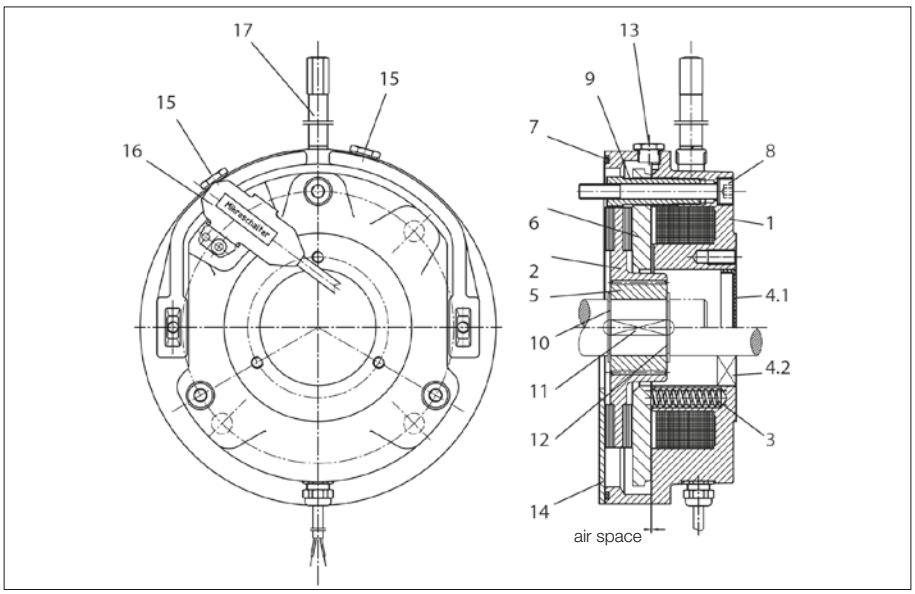

Figure 1: Construction of ES(X) brake

Construction of ES(X) brake

1	Electromagnet housing	9	Hollow screw
2	Brake disc	10	Retaining ring
3	Compression spring	11	Key
4.1	Cover plate with closed brake	12	Retaining ring
4.2	Shaft seal with through shaft	13	Screw plug for checking air gap
5	Drive bush	14	Friction plate (only with motor size Dxx08 or Dxx09)
6	Anchor disc	15	Screw plug for checking microswitch setting
7	O-ring	16	Microswitch (optional)
8	Fitting screw with copper washer	17	Manual release (optional)

Brake mounting
ES and ESX: Brake mounting is under the fan cover
EH and EHX: Brake mounting is on the fan cover

Options
- Manual release, non-locking or locking
- Microswitch for monitoring operation or wear

Product description of type ZS(X) spring-actuated brakes

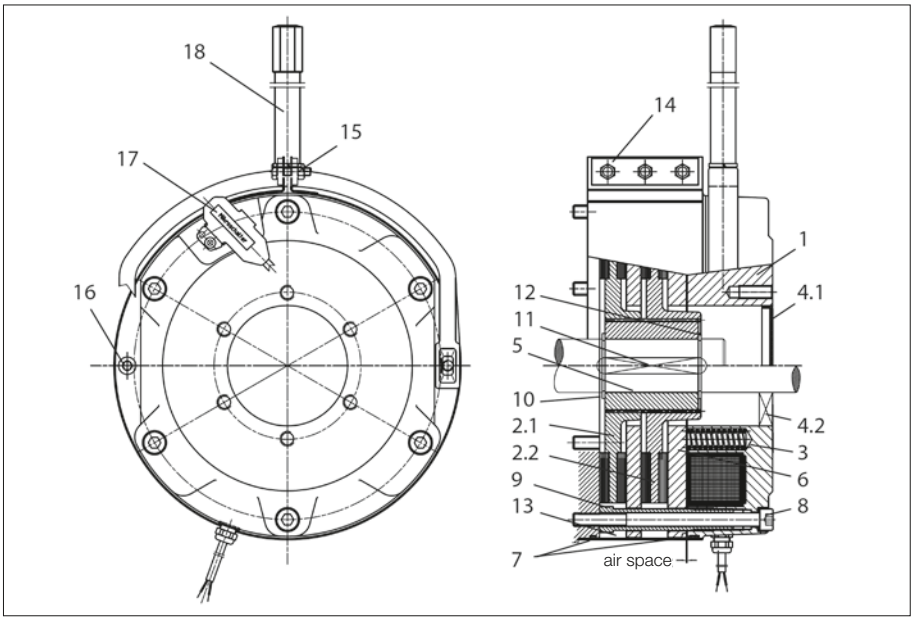

Figure 2: Construction of ZS(X) brake

Construction of ZS(X) brake

1	Electromagnet housing	9	Hollow screw
2.1	Brake disc	10	Retaining ring
2.2	Brake disc	11	Key
3	Compression spring	12	Retaining ring
4.1	Cover plate	13	Cover
4.2	Shaft seal with through shaft	14	Fitting screws
5	Drive bush	15	Bracket
6	Anchor disc	16	Assembly screw/assembly aid
7	O-ring	17	Microswitch (optional)
8	Fitting screw with copper washer	18	Manual release (optional)

Options

- Manual release, non-locking or locking
- Microswitch for monitoring operation or wear

Brake selection and sizing

If the working brake is undersized, it will have increased wear and a shorter lifetime. If it is oversized, the resulting mechanical forces may overload the drive.

If specific application data is not available, in the case of horizontally driven equipment we recommend selecting a braking torque with a safety factor (K) of 1 to 1.5 times the rated torque of the motor.

For braking to standstill, the selected braking torque should be at least 80 % of the rated torque of the drive.

Rated torque:

$$M_{Berf} = \frac{P \times 9550}{n_2} \times K$$

M_{Berf}	Braking torque	[Nm]
P	Motor power	[kW]
n	Rated speed at rotor shaft	[rpm]

For lifting operation, a braking torque equal to twice the rated motor torque should always be chosen for safety reasons.

If the moment of inertia, speed and allowable deceleration time of the machine are known, the braking torque can be calculated as described below.

External moments of inertia

If the masses to be decelerated by the brake do not run at the same speed as the rotor shaft, the moment of inertia (J_{ext}) must be reduced to the value at the rotor shaft

$$J_{ext'} = \frac{J_{ext1} \times n_1^2 + J_{ext2} \times n_2^2 + ... + J_{extn} \times n_n^2}{i^2}$$

or the external moment of inertia reduced by the gear ratio of the gear unit to the value at the rotor shaft.

$$J_{ext'} = \frac{J_{ext}}{i^2}$$

J_{ext}	Total external moment of inertia [kgm²]
$J_{ext'}$	Total external moment of inertia referenced to the rotor shaft [kgm²]
$J_{ext1,2,...}$	Individual external moments of inertia [kgm²]
i	Gear reduction ratio
n	Rotor shaft speed
$n_{1,2}$...	Speeds of the individual moments of inertia [rpm]

Load torque under static load

$$M_L = F \times r$$

M_L	Load torque [Nm]
F	Force [N]
r	radius [m]

Braking torque with dynamic load

A purely dynamic load is present when flywheels, rolls, etc. must be decelerated and the static load torque is negligible.

$$M_a = \frac{J_{ges} \times n_a}{9{,}55 \times (t_a - t_A)} = \frac{(J_{ext.} + J_{rot} + J_{Br}) \times n_a}{9{,}55 \times (t_a - t_A)}$$

J_{br}	Moment of inertia of the brake [kgm²]
J_{rot}	Moment of inertia of the rotor shaft and rotor [kgm²]
M_a	Deceleration torque [Nm]
n_a	Initial speed at start of deceleration [rpm]
t_a	Total deceleration time (from switch-off until drive is stationary) [s]
t_A	The response time of the brake for braking corresponds to t_{AC} or t_{DC} in the specification tables [s]

Dynamic and static loads

In most application situations, both static and dynamic loads are present.

$M_{Berf} = (M_a \pm M_L) \times K$ where $M_{Berf} \leq M_{Br}$ must hold true.

M_L braking (positive) or driving (negative) load torque [Nm]

Heat generated by each brake cycle

Friction converts the kinetic energy of the moving masses into heat.

This amounts to

$$W = \frac{J_{ges} \times n^2}{182{,}5} = \frac{(J_{ext.} + J_{rot} + J_{Br}) \times n_a^{\,2}}{182{,}5}$$ where $W \leq W_{max}$ must hold true.

W	Braking energy for each brake cycle [J]
M_{max}	Maximum permissible frictional energy per brake cycle (see brake tables)

Thermally allowable braking energy of working brakes

With a uniform sequence of brake cycles, which means a certain average number of brake cycles per hour, the temperature rises until an equilibrium between heat input and heat dissipation is reached. The temperature rise must be sized to avoid overheating the coil and the friction layer, taking the ambient temperature into account.

Braking to standstill:

$$W_Z = W \times Z \leq W_{th}$$

W_{th} Maximum allowable braking energy per hour
W_Z Braking energy with Z brake cycles
Z Number of brake cycles per hour

Lifting operation

In lowering operation, the drive motor acts as a generator and its braking effect results in a steady downward motion (constant speed). If we ignore transmission losses, under full load the drive must brake the load with the rated motor torque. If a mechanical brake with a braking torque equal to the braking torque of the motor is applied after the drive is switched off, the downward motion will continue at the same speed. This means that additional braking torque is necessary to stop the motion of the load. For example, if the brake is dimensioned for 200 % braking torque, approximately 100 % is used for “static” deceleration and the rest is used for “dynamic” deceleration.

If part of the braking torque is required for braking the load during lowering (downward motion), the brake engagement time is greater, and the thermal load is therefore greater.

In this case

$$W_H = \frac{M_{Br}}{M_{Br} - M_L} \times W_Z$$

W_H Friction energy per hour in lifting operation
M_{Br} Braking torque of the brake

Brake lifetime

The energy absorbed during braking causes the brake disc to wear, which increases the air gap. If the air gap increases beyond a certain maximum gap size, the magnetic field is so weak that the pulling force of the electromagnet is no longer sufficient to release the brake. A proper air gap must be restored by adjusting the air gap or by replacing the brake disc, depending on the type of brake construction.

The maximum number of brake cycles until service is necessary can be calculated as follows:

$$Z_L = \frac{W_L}{W}$$

Z_L Number of brake cycles until the air gap limit is reached
W_L Maximum allowable braking energy until maintenance; i.e. replacing the brake disc or adjusting the air gap. Adjustment of the air gap is possible only with type ZXSxx brakes.

Deceleration time

The pure braking time from the start of mechanical braking to standstill depends on the braking deceleration.
Especially with lifting operation, but also in other types of operation, it is necessary to check whether the load torque reinforces the braking effect or counters the braking effect.

The deceleration time is therefore calculated as follows:

$$t_a = \frac{J_{ges} \times n_a}{9{,}55 \times (M_{Br} \pm M_L)}$$

Electrical connection

General

There are two basic options for providing the supply voltage for the DC electromagnet:
1. Externally from an existing DC control voltage mains or a rectifier in the cabinet.
2. From a rectifier built into the motor or brake terminal box. In this case, the rectifier can be powered either directly from the motor terminal board or from the mains.

Note that in the following cases the rectifier is not allowed to be connected to the terminal board of the motor:

- Pole-changing motors and motors with wide operating voltage range
- Operation from a frequency converter
- Other configurations in which the motor voltage is not constant, such as operation with soft-start devices, start-up transformers, etc.

Release

When the rated voltage is applied to the electromagnet coil, the current through the coils increases exponentially and with it the generated magnetic field. The current must rise to a certain value ($I_{release}$) before it overcomes the spring force and starts to release the brake.

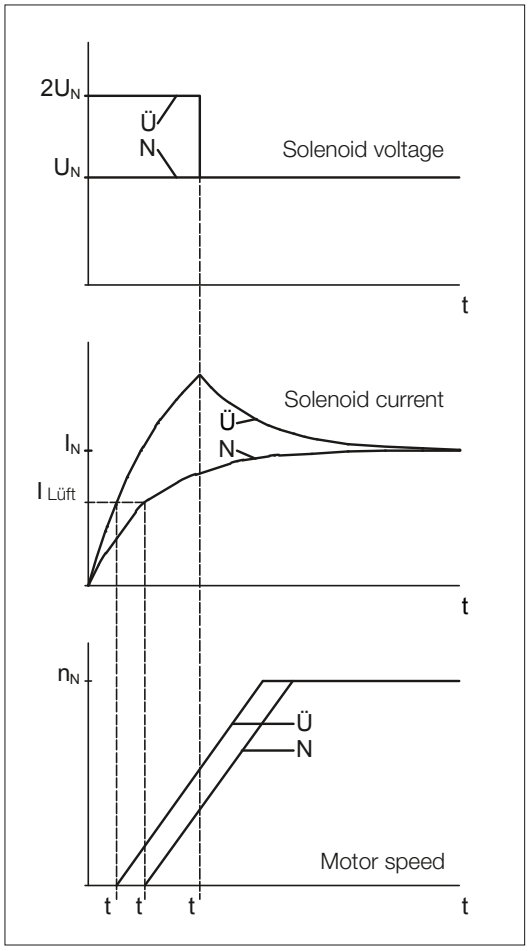

Figure 3: Idealised curves of coil voltage, coil current and motor speed with normal excitation (N) and overexcitation (Ü). $t_{Ü}$: overexcitation time; t_{AN}, $t_{AÜ}$: Response time with normal excitation and overexcitation.

Two different situations can arise during the response time tA, assuming that the voltage is applied to the motor and the brake simultaneously:

- The motor is locked if $M_A < M_L + M_{Br}$
  The motor draws its locked-rotor current, which increases the thermal load on the motor.
  This situation is illustrated in Figure 3.
- The brake slips if $M_A > M_L + M_{Br}$
  In this case, the brake is also thermally stressed during start-up and wears faster.

M_A: locked rotor torque of the motor; M_L: load torque; M_{Br}: braking torque

As can be seen, there is an additional load on the motor and brake in both cases. The effect of the response time increases with increasing brake size. Consequently, it is advisable to reduce the response time, especially with medium-sized and large brakes and with a high cycle rate. This can be achieved relatively easily by means of electrical overexcitation. With this approach, the coil is briefly operated at twice its rated voltage after switch-on.

This causes the current to rise faster than with normal excitation, and it reduces the response time by approximately 50 %. This overexcitation function is built into the type MSG special rectifier.

The release current increases with increasing air gap, and with it the response time. When the release current exceeds the rated coil current, the brake will not be released with normal excitation and the brake has reached its wear limit.

Braking

The brake does not start generating braking torque immediately after the coil voltage is switched off. First the magnetic energy must decline to the point that the spring force can overcome the magnetic force. This occurs at the holding current I_{hold}, which is lower than the release current.
The response time depends on how the voltage is switched off.

Switching off the AC supply voltage to a type SG standard rectifier

a) Rectifier powered from the motor terminal board (Figure 4, curve 1)
   Response time t_{A1}: very long
Cause: Due to the residual magnetism of the motor, after the motor voltage is switched off a slowly decaying voltage is induced, and it continues to supply power to the rectifier and thereby to the brake. In addition, the magnetic energy of the brake coil is dissipated relatively slowly in the freewheel circuit of the rectifier.

b) Rectifier powered separately (Figure 4, curve 2)
   Response time t_{A2}: long

Cause: After the rectifier voltage is switched off, the magnetic energy of the brake coil is dissipated relatively slowly in the freewheel circuit of the rectifier.

If the supply voltage is interrupted on the AC side, no significant switch-off voltage occurs on the electromagnet coil.

Interrupting the DC circuit of the electromagnet coil (Figure 4, curve 3)

a) By a mechanical switch
- with separate power supply from a DC control voltage mains or
- at the DC switch contacts (A2 and A3) of the type SG standard rectifier

Response time t_{A3}: very short

Cause: The magnetic energy of the brake coil is dissipated very quickly by arcing across the switch contacts.

b) Electronic

Using a type ESG or MSG special rectifier

Response time t_{A3}: short

Cause: The magnetic energy of the brake coil is dissipated quickly by a varistor integrated in the rectifier.

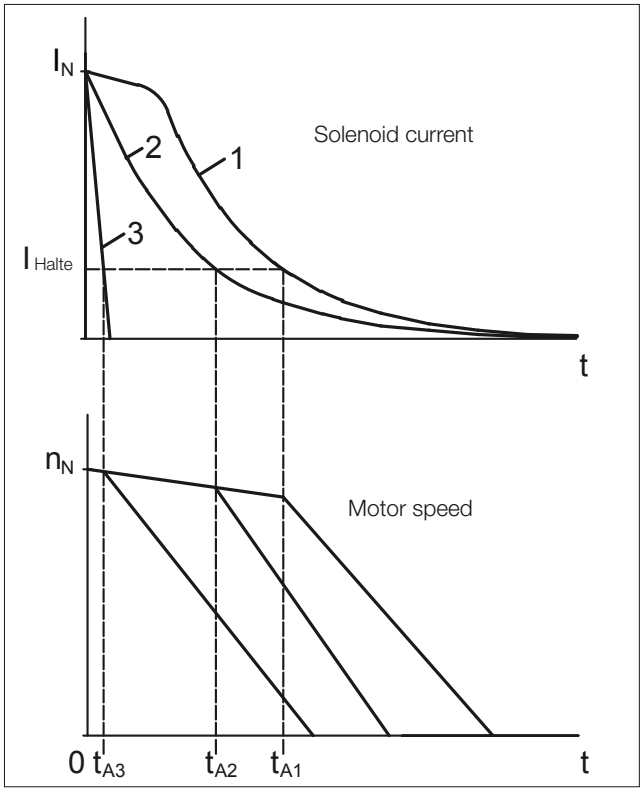

Figure 4: Idealised coil current and motor speed curves after switching off power on the AC side (1 and 2) or DC side (3)

If the circuit is interrupted on the DC side, a high voltage u_q is induce by the electromagnet coil. The magnitude of this voltage depends on the inductance L of the coil and the switch-off speed di/dt according to the formula

$$u_q = L \cdot \frac{di}{dt}$$

Due to the winding design, the inductance L increases with increasing rated coil voltage. Consequently, the voltage spikes induced at switch-off can reach hazardous levels with relatively high coil voltages. For this reason, a varistor is included in the circuit for all brakes with voltages greater than 24 V.

This varistor is solely intended to protect the electromagnet coil; it is not intended to protect adjacent electronic components or devices against electromagnetic interference. On request, brakes with rated voltages of 24 V or less can also be fitted with a varistor.
If the circuit is interrupted on the DC side by a mechanical switch, the resulting arcing over the switch contacts causes strong erosion of the contacts. For this reason, only special DC contactors or adapted AC contactors with contacts rated for use class AC3 as specified in EN 60947-4-1 may be used.

Specifications of holding brakes with emergency stop capability

The maximum allowable friction energy values stated here do not apply to brake motors for use in areas with potentially explosive atmospheres.
Refer to separate data in appropriate documents for explosion-proof drives.

Type	M_{Br} [Nm]	W_{max} [10^3 J]	W_{th} [10^3 J]	W_L [10^6 J]	t_A [ms]	t_{AC} [ms]	t_{DC} [ms]	P_{el} [W]	J [10^{-3} kgm²]
E003B9	3	1.5	-	-	35	150	15	20	0.01
E003B7	2.2	1.8	-	-	28	210	20		
E003B4	1.5	2.1	-	-	21	275	30		
E004B9	5	2.5	-	-	37	125	15	30	0.017
E004B8	4	3	-	-	30	160	18		
E004B6	2.8	3.6	-	-	23	230	26		
E004B4	2	4.1	-	-	18	290	37		
E004B2	1.4	4.8	-	-	15	340	47		
ES/EH010AX	15*	3	-	-	110	-	30	35	0.045
ES/EH010A9	10	3	-	-	60	100	15		
ES/EH010A8	8	3	-	-	55	150	20		
ES/EH010A5	5	3	-	-	45	220	20		
ES/EH010A4	4	3	-	-	30	250	20		
ES/EH010A2	2.5	3	-	-	25	350	25		
ES027AX	32*	2.5	-	-	80	-	30	50	0.172
ES/EH027A9	27	2.5	-	-	120	100	15		
ES/EH027A7	20	2.5	-	-	100	130	20		
ES/EH027A6	16	2.5	-	-	80	170	25		
ES/EH040A9	40	3.5	-	-	100	100	20	65	0.45
ES/EH040A8	34	3.5	-	-	80	200	25		
ES/EH040A7	27	3.5	-	-	70	250	30		
ES/EH070AX	90*	3.5	-	-	120	-	40	85	0.86
ES/EH070A9	70	3.5	-	-	120	150	18		
ES/EH070A8	63	3.5	-	-	120	200	20		
ES/EH070A7	50	3.5	-	-	90	220	25		
ES/EH125A9	125	4.5	-	-	170	220	25	105	1.22
ES/EH125A8	105	4.5	-	-	150	320	28		
ES/EH125A7	85	4.5	-	-	135	350	30		
ES/EH125A6	70	4.5	-	-	120	440	35		
ES125A5	57	4.5	-	-	100	600	40		
ES125A3	42	4.5	-	-	90	700	45		
ES/EH200A9**	200	8	-	-	400	150	22	105	2.85
ES/EH200A8**	150	8	-	-	280	250	35		
ES/EH200A7**	140	8	-	-	200	320	35		
ES250A9**	250	9	-	-	300	500	45	135	6.65
ES250A8**	200	9	-	-	200	960	60		
ES250A6**	150	9	-	-	160	1100	60		
ES250A5**	125	9	-	-	150	1500	90		
ES250A4**	105	9	-	-	130	1800	110		
ZS300A9**	300	8	-	-	280	220	35	75	5.7
ZS300A8**	250	8	-	-	210	380	45		
EH400A9**	400	10	-	-	300	600	60	180	19.5
EH400A7**	300	10	-	-	200	850	75		
EH400A5**	200	10	-	-	150	1400	85		
ZS500A9**	500	9	-	-	320	320	50	100	13.3
ZS500A8**	400	9	-	-	260	600	60		

* Requires overexcitation; permissible only with MSG rectifier
** Cannot be combined with PMSM motors of the S series

Braking torque tolerance: -10 / +30 %

W_{th} and WL are not specified because little or no braking energy is dissipated by holding brakes when they are used as intended.

For versions with braking torque marked with *, which may only be used with an MSG rectifier, the values of t_A and t_{DC} apply to operation with an MSG rectifier; i.e. t_A for overexcitation or t_{DC} for electronic circuit interruption on the DC side.

Due to the effects of operating temperature and manufacturing tolerances, actual response times may differ from the guideline values listed here.

Specifications of working brakes

The maximum braking energy values stated here do not apply to brake motors for use in areas with potentially explosive atmospheres.
Refer to separate data in appropriate documents for explosion-proof drives.

Type	M_{Br} [Nm]	W_{max} [10^3 J]	W_{th} [10^3 J]	W_L [10^6 J]		t_A [ms]	t_{AC} [ms]	t_{DC} [ms]	P_{el} [W]	J [10^{-3} kgm^2]
				without HL***	with HL***					
E003B9	3	1.5	36	55	55	35	150	15	20	0.01
E003B7	2.2	1.8	36	90	90	28	210	20		
E003B4	1.5	2.1	36	140	140	21	275	30		
E004B9	5	2.5	60	50	50	37	125	15	30	0.017
E004B8	4	3	60	100	100	30	160	18		
E004B6	2.8	3.6	60	180	180	23	230	26		
E004B4	2	4.1	60	235	235	18	290	37		
E004B2	1.4	4.8	60	310	310	15	340	47		
ESX/EHX010AX	15*	3	250	120	120	110	-	30	35	0.045
ESX/EHX010A9	10	3	250	120	120	60	100	15		
ESX/EHX010A8	8	3	250	150	150	55	150	20		
ESX/EHX010A5	5	3	250	240	240	45	220	20		
ESX/EHX010A4	4	3	250	300	240	30	250	20		
ESX/EHX010A2	2.5	3	250	390	240	25	350	25		
ESX027AX	27*	10	350	150	150	80	-	30	50	0.172
ESX/EHX027A9	22	10	350	150	150	120	100	15		
ESX/EHX027A7	16	10	350	300	300	100	130	20		
ESX/EHX027A6	13	10	350	350	350	80	170	25		
ESX/EHX040A9	32	20	450	420	420	100	100	20	65	0.45
ESX/EHX040A8	27	20	450	560	490	80	200	25		
ESX/EHX040A7	22	20	450	700	490	70	250	30		
ESX/EHX070AX	72*	28	550	700	700	120	-	40	85	0.86
ESX/EHX070A9	58	28	550	500	500	120	150	18		
ESX/EHX070A8	50	28	550	800	700	120	200	20		
ESX/EHX070A7	40	28	550	1200	700	90	220	25		
ESX/EHX125AX	100*	40	700	1900	1900	100	-	70	105	1.22
ESX/EHX125A9	85	40	700	1700	1700	150	320	28		
ESX/EHX125A8	70	40	700	1900	1700	135	350	30		
ESX/EHX125A7	58	40	700	2700	1700	120	440	35		
ESX125A5	45	40	700	3300	1700	100	600	40		
ESX125A3	34	40	700	3300	1700	90	700	45		
ESX/EHX200AX**	160*	60	850	2000	2000	105	-	70	105	2.85
ESX/EHX200A9**	120	60	850	1700	1700	280	250	35		
ESX/EHX200A8**	110	60	850	2600	2600	200	320	35		
ESX250A9**	200	84	1000	2800	2800	300	500	45	135	6.65
ESX250A8**	160	84	1000	6800	5700	200	960	60		
ESX250A6**	120	84	1000	8500	5700	160	1100	60		
ESX250A5**	100	84	1000	11000	5700	150	1500	90		
ESX250A4**	85	84	1000	11000	5700	130	1800	110		
ZSX300A9**	250	60	850	1300	1300	280	220	35	75	5.7
ZSX300A8**	200	60	850	2000	2000	210	380	45		
EHX400A9**	320	120	1100	3000	3000	300	600	60	180	19.5
EHX400A7**	240	120	1100	4800	4800	200	850	75		
EHX400A5**	160	120	1100	6000	4800	150	1400	85		
ZSX500A9**	400	84	1000	2800	2800	320	320	50	100	13.3
ZSX500A8**	320	84	1000	4000	4000	260	600	60		

* Requires overexcitation; permissible only with MSG rectifier

** Cannot be combined with PMSM motors of the S series

*** HL = manual release

Braking torque tolerance:
E003 / E004: -10 / +30 %
ESXxx / ZSXxx: -20 / +30 % after run-in; up to -30 % in new condition.

For versions with braking torque marked with *, which may only be used with an MSG rectifier, the values of t_A and t_{DC} apply for operation with an MSG rectifier; i.e. t_A for overexcitation or t_{DC} for electronic circuit interruption on the DC side.

The values for W_L are guidelines; actual values may vary significantly depending on the application situation. Periodic inspection of the air gap or brake disc thickness is recommended.

Actual response times may differ from the times listed here due to the effects of operating temperature, brake disc wear and manufacturing tolerances.

Key to symbols

M_{Br}	Rated braking torque
W_{max}	Maximum allowable friction energy for an emergency stop with a holding brake
W_{max}	Maximum allowable friction energy for each brake cycle with working brakes
W_{th}	Maximum allowable braking energy per hour
W_L	Maximum allowable braking energy until maintenance; i.e. brake disc replacement or air gap adjustment. Air gap adjustment is possible only with type ZSXxx brakes.
H_L	Manual release
t_A	Response time for release with normal excitation. Overexcitation with a type MSG special rectifier reduces the response time by approximately 50 %.
t_{AC}	Response time for brakes with AC-side switch-off, i.e. by switching off the supply voltage to a separately powered standard rectifier. If the supply voltage for the rectifier is taken from the motor terminals, considerably longer response times should be expected (depending on the motor size and winding design).
t_{DC}	Response time for braking with DC-side circuit interruption by a mechanical switch. In the case of electronic circuit interruption on the DC side by a type ESG or MSG special rectifier, the response times will be approximately two to three times as long.
P_{el}	Electromagnet coil power consumption at 20 °C. Depending on the rated voltage of the coil, the actual power may differ from the guideline value stated here.
J	Moment of inertia of the drive bush and brake disc(s)

Connection

The electrical connections to the brake are made in the motor terminal box using terminals or the rectifier. Standard voltages:

380–420 V 50/60 Hz (brake coil voltage 180 V DC)

220–230 V 50/60 Hz (brake coil voltage 105 V DC)
24 V DC (brake coil voltage 24 V DC)

Other voltages are available at additional cost.

DC connection via terminals (K)

The brake must be connected via separate terminals in the motor or brake terminal box directly to the DC voltage. The standard voltages are 180 V DC, 105 V DC and 24 V DC. Brakes with other operating voltages are available at additional cost.

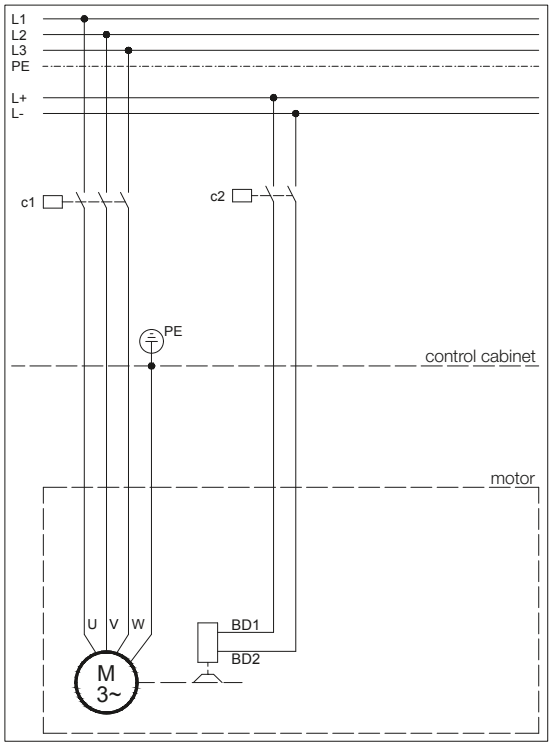

Standard rectifier (S)

Working principle	Half-wave rectifier with switch contacts for DC-side circuit interruption
Input voltage U_1	max. 575 VAC +5 %
Output voltage	0.45 x U_1 VDC
Max. output current	2.5 A DC
Ambient temperature	-40 to +40 °C
Connection	Caged Clamp terminals with clamp lever
Clampable conductor cross-section	max. 1.5 mm² without wire end sleeve max. 1.5 mm² with wire end sleeve
Approvals	c-CSA-us c-UL-us (only in combination with B2000 geared motors and brakes in the ES(X) or ZS(X) product series

The brake must be connected to the AC supply via the standard rectifier in the motor terminal box or brake terminal box. The standard voltages are 380 ... 420 V 50/60 Hz or 220 ... 230 V 50/60 Hz. Other voltages up to 575 V are available at extra cost. In a configuration with standard rectifier, the brake circuit can be interrupted by an extra contact on the d.c. side in order to reduce the response time. This significantly reduces the braking time and overtravel distance.

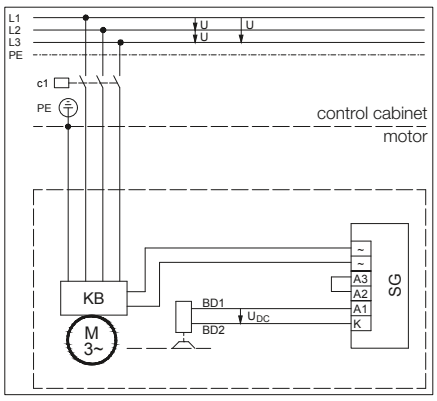

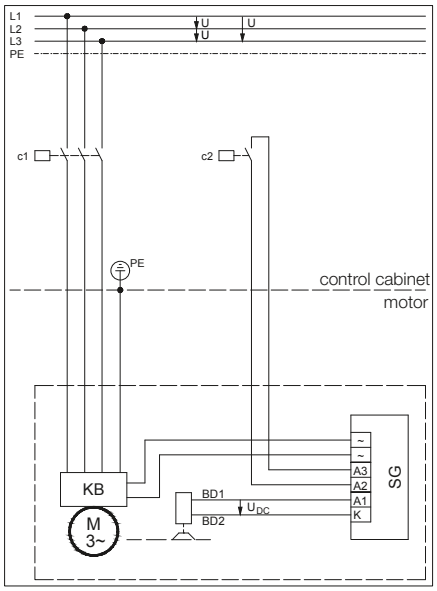

Voltage connection for the rectifier from the motor terminal block or cage clamp (see Rectifier Connection on Motor Terminal Block or Cage Clamp)

Rectifier for electronic rapid shutdown (E)

Working principle	Half-wave rectifier with electronic DC-side circuit interruption
Input voltage U_1	220–460 V AC ±5 %, 50/60 Hz
Output voltage	0.45 x U_1 V DC
Max. output current	1 A DC
Ambient temperature	-20 °C to +40 °C
Clampable conductor cross-section	max. 1.5 mm²

This rectifier permits electronic DC-side interruption of the brake circuit. No additional cable to the rectifier is necessary. The rectifier is supplied complete with a protective resistor which prevents a mains short- circuit via the shutdown arc of the high-speed motor contactor. Brake response times are significantly shorter than those achievable by AC-side interruption of the brake circuit. They are, however, longer than those achievable with DC-side interruption by a mechanical switch. The brake must be connected to the alternating current via the rapid shutdown rectifier in the motor terminal box or the brake terminal box. The standard voltages are 380 ... 420 V 50/60 Hz or 220 ... 230 V 50/60 Hz. Other voltages up to 460 V are available at extra cost.

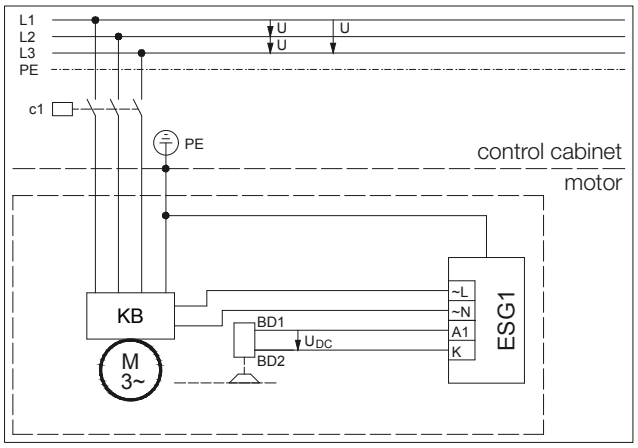

Voltage connection for the rectifier from the motor terminal block or cage clamp (see Rectifier Connection on Motor Terminal Block or Cage Clamp)

Standard rectifier (M)

Working principle	MSG 1.5.480I Half-wave rectifier with time-limited overexcitation and electronic DC-side circuit interruption Fast shutdown due to no motor current in one phase
Input voltage U_1	220–480 V AC +6 / -10 %, 50/60 Hz
Output voltage	0.9 x U_1 V DC during overexcitation 0.45 x U_1 V DC over overexcitation period
Overexcitation time	0.3 s
Max. output current	1.5 A DC
Ambient temperature	-20 °C to +40 °C
Clampable conductor cross-section	max. 1.5 mm^2

Working principle	MSG 1.5.500U Half-wave rectifier with time-limed overexcitation and electronic DC-side circuit interruption Fast shutdown due to the absence of input voltage
Input voltage U_1	220–500 V AC ±10 %, 50/60 Hz
Output voltage	0.9 x U_1 V DC during overexcitation 0.45 x U_1 V DC over overexcitation period
Overexcitation time	0.3 s
Max. output current	1.5 A DC
Ambient temperature	-20 °C to +40 °C
Clampable conductor cross-section	max. 1.5 mm^2

In cases where there are high motor switching frequencies, the brake can be de-energised more rapidly with this rectifier thereby significantly reducing the thermal stress on the motor. In addition, interrupting the brake‘s DC circuit by electronic means significantly reduces response times. Depending on the circumstances in which they are to be used, either the MSG 1.5.500 U (rapid shutdown brought about by removed supply voltage) or MSG 1.5.480 I (rapid shutdown brought about by removed motor current in a phase) is used. Power supply 220 to 480 V AC.

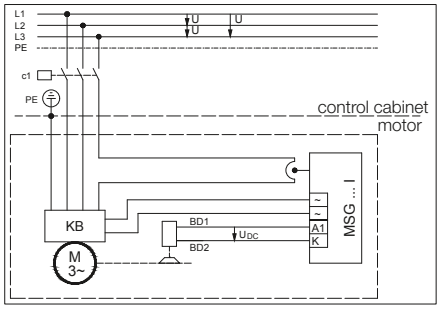

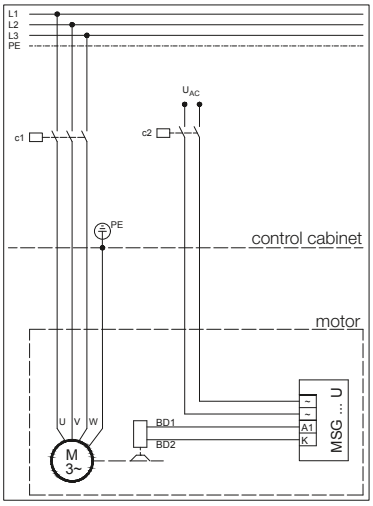

Rectifier Connection on Motor Terminal Block or Cage Clamp

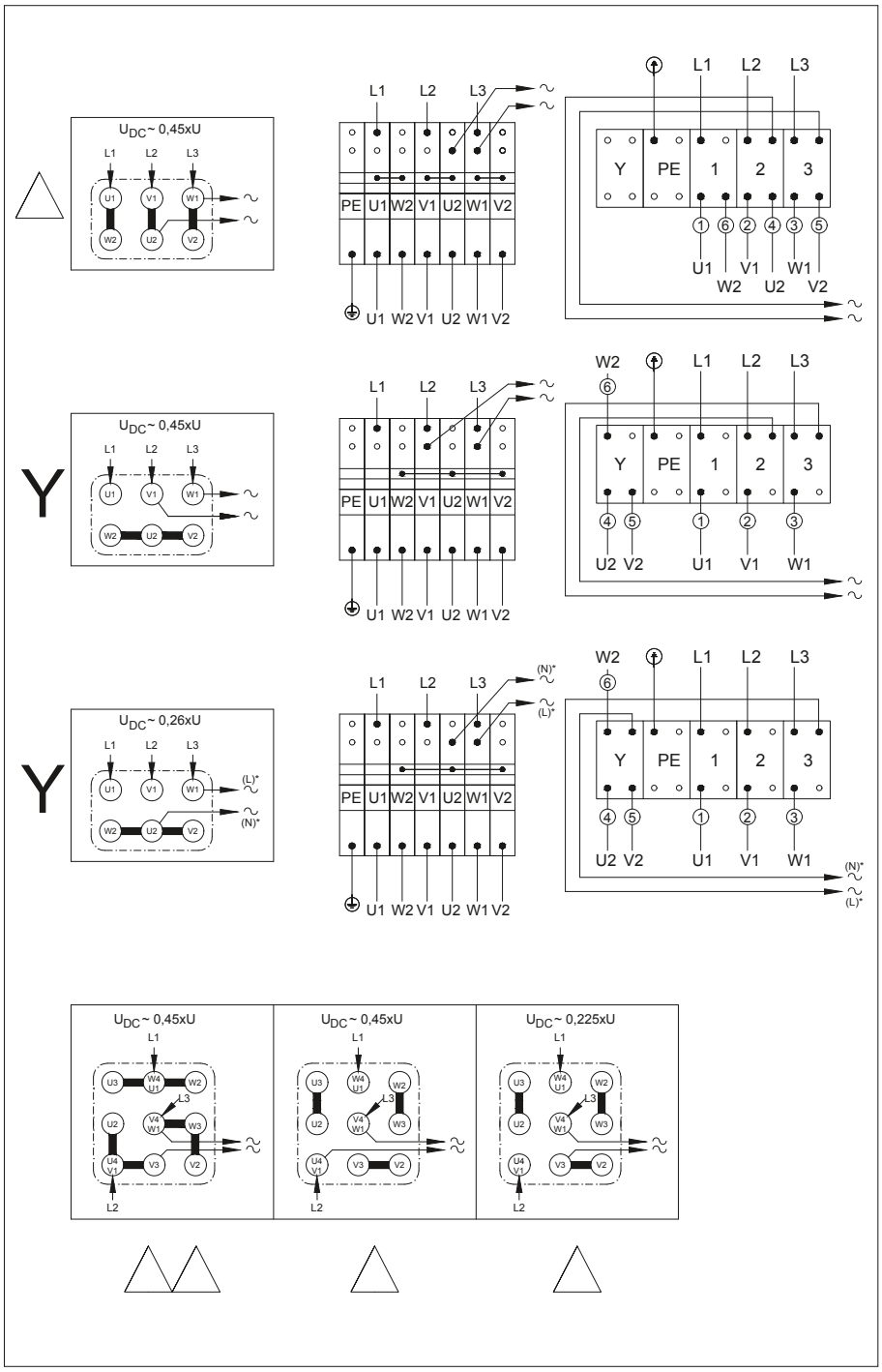

Brake connection, operation with frequency converter

The voltage present at the motor terminal block when operating with a frequency converter is frequency-dependent. Brakes require a constant voltage, so they need a seperate electrical connection. This is the reason why the brake is not connected to the motor terminals ex- works.

Brake connection, pole-changing motors

The brakes of pole-changing motors need a seperate electrical connection. As is the case with motors for operation with frequency inverters, the brake is not connected to the motor terminals ex-works.

Manual release (HA, HN)

All brakes are available with mechanical manual release on request. Non-latching manual release is the standard version (HN). A latching manual release (HA) can be supplied if required for all brake sizes.

Explosion protection

Brakes for use in hazardous areas are subject to special regulations. Please consult our support specialists in these special cases.

Back stop (RR, RL)

Motors of size D..08 to D..22 are available with backstop. The locking rotational direction clockwise (RR) or anticlockwise (RL) is to given in the order. The reference is the connection side of the gearbox. Should the connection side not be clearly defined, gearbox side “V” (front) will be assumed (see chapter 17 Dimensions drawing "Motor with back stop").

Note that the back-stop functionality on a motor operating with a frequency converter is guaranteed only at rotor speeds above 740/min.

It is advisable to consult BAUER for applications in corrosive atmospheres, especially for motor-down installed positions.

Second motor shaft extension (ZW, ZV)

The motors are also available on request with a second motor shaft extension in design ZW (shaft with key) or ZV (shaft with square end).

Half the central motor‘s rated power is available at each of the two shafts. Permissible radial loads available on request. Guards are not included in the scope of supply (for dimensional drawing see chapter 16).

Motors with brakes are available on request with a second shaft stub extended through the brake.

Protective fan cowl (D)

A protective hood over the fan cowl is recommended for outdoor installations where the motor is pointing upward and subject to severe or prolonged exposure to water (dimensional drawing, see chapter 16).

This protective hood is mandatory for upright explosion-proof motors.

A special fan cowl for the textiles industry is available on request at extra cost. This design prevents airborne fibres and fluff clogging the fan cowl.

Motor-independent fan (FV)

For special applications, standard motors and brake motors of size D08 and larger are available with externally mounted motor-independent fans. The standard line voltage of the motor-independent fan matches the voltage of the geared motor (dimensional drawing for motor-independent fan, see chapter 16).

The independent fans are supplied as standard with Bayonet-fitting for standard motors sizes D..16 and D..18 and brake motors sizes D..11 to D..18.

Technical Data:
Multivolt Conception Running capacitor for single phase duty enclosed as standard.

Technical Data Motor-independent fan

Mode	Frame size	Blower Diameter	Range of voltage		max. permissible current		max. power input	
		[mm]	[V]		[A]		[W]	
			50 Hz	60 Hz	50 Hz	60 Hz	50 Hz	60 Hz
1 ~ ⊥ (Δ)	63	118	230-277	230-277	0.18	0.21	46	54
	71	132	230-277	230-277	0.18	0.21	48	56
	80	150	230-277	230-277	0.19	0.22	48	59
	90	169	220-277	220-277	0.29	0.23	59	61
	100	187	220-277	220-277	0.29	0.28	62	73
	112	210	220-277	220-277	0.27	0.36	64	88
	132	250	230-277	230-277	0.52	0.61	125	163
	160-200	300	230-277	230-277	1.05	1.52	246	390
3 ~ Y	63	118	346-525	380-575	0.09	0.08	28	29
	71	132	346-525	380-575	0.09	0.07	29	28
	80	150	346-525	380-575	0.09	0.07	33	36
	90	169	346-525	380-575	0.22	0.18	78	71
	100	187	346-525	380-575	0.21	0.18	80	80
	112	210	346-525	380-575	0.2	0.17	87	93
	132	250	346-525	380-575	0.37	0.32	160	180
	160-200	300	346-525	380-575	0.74	0.62	314	391
3 ~ Δ	63	118	200-303	220-332	0.15	0.14	28	29
	71	132	200-303	220-332	0.15	0.13	29	28
	80	150	200-303	220-332	0.16	0.13	33	36
	90	169	200-303	220-332	0.39	0.32	78	71
	100	187	200-303	220-332	0.37	0.3	80	80
	112	210	200-303	220-332	0.35	0.29	87	93
	132	250	200-303	220-332	0.64	0.55	160	180
	160-200	300	200-303	220-332	1.28	1.08	314	391

Shaft encoder (G)

Bauer gear motors can be fitted with either an incremental encoder or an absolute encoder for special applications. Both the standard incremental encoder and the absolute encoder are optimised and suitable for use with all modern inverters.

Bauer standard encoders as from motor frame size D05 (0,18 kW) are protected against mechanical damage by means of a protective cover (Additional Dimension Sheet see chapter 16).

Special features: standard incremental encoder:
- Robust mount
- EMC-tested
- Protected against polarity reversal
- Supply voltage 8-30 V DC
- A-, B- and N-lines and inverted signals or output signals as preferred
- HTL output circuit (TTL on request)
- 1024 pulses per revolution

Special features: standard absolute encoder
- Steps per revolution: 8192 (13 Bit)
- Number of turns: 4096 (12 Bit) shaft turns
- Execution of electronic: SSI (Synchronous-Serial Interface)
- Output code: Gray-Code
- Supply voltage: 11-27 V DC
- Loss efficiency (no load): ≤ 3 Watt
- Output driver: RS-422 (2-wire)

Motor Mounted Components

Incremental rotary encoder

Functional description

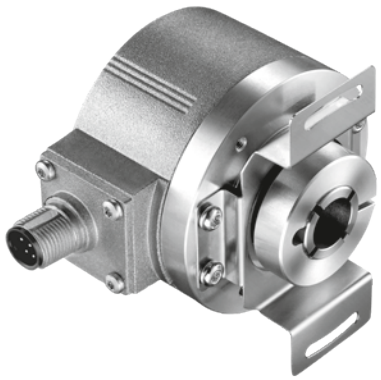

Incremental encoders are used to determine motor shaft positions. An incremental encoder detects rotary motion and coverts it into an electrical output signal. An encoder disc with a specific number of periods per rotation senses angular motion. The optoelectronic scanning unit generates signals and issues pulses after the signals have been processed in trigger stages. The resolution is defined by the number of opaque and clear segments on the encoder disc. For example, an encoder with 1024 lines will generate a sequence of 1024 pulses for one full rotation.

The combination of an incremental encoder and a frequency converter allows optimised solutions to be developed, such as

- speed controllers with a wide adjustment range
- accurate speed control
- constant-speed control
- position control

Supply voltage:	8–30 V DC with HTL 5 V DC with differential TTL
Output signals:	HTL A, B and N tracks; optional TTL
Pulses per revolution:	1024 Optional 1…65536
Enclosure rating:	IP65 (optional IP67)
Temperature range:	-40 °C to +100 °C

Electrical specifications

Output voltage	RS 422 (TTL compatible)	RS 422 (TTL compatible)	Differential	Differential (7272)
Supply voltage	5–30 V DC	5 V ±5%	8–30 V DC	5–30 V DC
No-load current consumption With inversion:	max. 70 mA	max. 70 mA	max. 70 mA	max. 70 mA
Allowable load per channel: Pulse rate:	max. ±20 mA max. 300 kHz	max. ±20 mA max. 300 kHz	max. ±20 mA max. 160 kHz	max. ±20 mA max. 160 kHz
High signal level:	min. 2.5 V	min. 2.5 V	min. UB – 3 V	min. UB – 3 V
Low signal level:	max. 0.5 V	max. 0.5 V	max. 1 V	max. 1 V

Plug end view with male pin insert

Connector type	8-pin M12 plug	12-pin M23 plug	MIL connector 10-pin
Layout	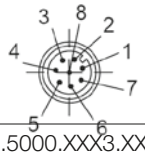		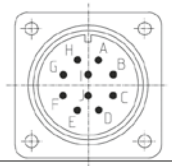
Order code:	8.5000.XXX3.XXXX 8.5000.XXX4.XXXX	8.5000.XXX7.XXXX 8.5000.XXX8.XXXX	8.5000XXXY.XXXX
Mating 05.CMB-8181-0 connector:		8.0000.5012.0000	8.0000.5062.0000

Signal assignments

Signal:	0 V GND	+U_B	0 V Sens	+Ub Sens	A	A	B	B	Z	Z	Shield
M23 Multifast, 12-pin connector; pin assignments: M12 Eurofast, 8-pin connector; pin assignments:	10 1	12 2	11	2	5 3	6 4	8 5	1 6	3 7	4 8	1) 1)
Military version; 10-pin connector; pin assignments:	F	D		E	A	G	B	H	C	I	J[1])
Cable; lead colour:	WH	BN	GY PK	RD BU	GN	YE	GY	PK	BU	RD	Shield

[1] Shield connected to plug housing.

Insulate unused outputs before putting into service.

Functional description

Absolute encoders detect both angular and rotational motions and convert them into electrical signals. In contrast to incremental encoders, with absolute encoders the current position is directly available. If an absolute encoder is moved mechanically while it is switched off, after the power is switched on again the current position can be read out immediately and directly. Absolute encoders are available in single-turn and multi-turn versions.

Profibus DP interface

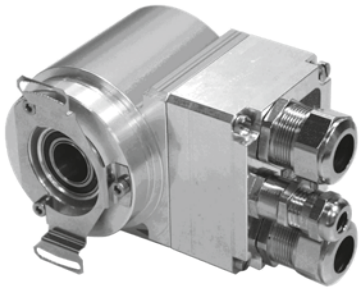

Specifications

Supply voltage	11–27 VDC
No-load current consumption	< 350 mA
Total resolution [1]	≤ 33 bits
Number of steps per revolution, standard/extended [1]	≤ 8,192 / ≤ 32,768
Number of turns, standard/extended [1]	≤ 4,096 / ≤ 256,000
Profibus DP V0	IEC 61158, IEC 61784
PNO encoder profile	Class 1/Class 2
parameters [1]	Counting direction switchover, scaling function, etc.
Output code [1]	Binary, Gray, truncated Gray
Address	3–99, set using a rotary switch
Baud rate	9.6 kbit/s to 12 Mbit/s
TR-specific functions [1]	Gear and speed outputs
Data width on bus for actual position	≤ 25 bits
Permissible mechanical speed	≤ 12,000 rpm
Shaft load	Own mass
Bearing life	≥ 3.9×10^{10} revolutions at
- speed	≤ 6,000 rpm
- operating temperature	≤ 60 °C
Shaft diameter [mm]	10H7
Permissible angular acceleration	≤ 10^4 rad/s^2
Moment of inertia	2.5×10^{-6} kg m^2 (typical)
Start-up torque at 20 °C	2 Ncm (typical)
Weight	0.3–0.5 kg

1) Configurable parameter

Ambient conditions

Vibration (EN 60068-2-6:1996)	≤ 100 m/s^2, sinusoidal 50–2,000 Hz
Shock (EN 60068-2-27:1995)	≤ 1000 m/s^2, half-cycle sinusoidal 11 ms
EMC	
- Interference emission compliant with EN 61000-6-3:2007	
- Interference immunity compliant with EN 61000-6-2:2006	
Operating temperature	0 °C to +60 °C; optionally -20 °C to +70 °C
Storage temperature	-30 °C to +80 °C, dry
Relative humidity (EN 60068-3-4:2002)	98 %, non condensing
Enclosure rating (EN 60529:1991)[2]	IP65

2 With mating connector fitted and/or cable glands fitted and tightened

SSI interface

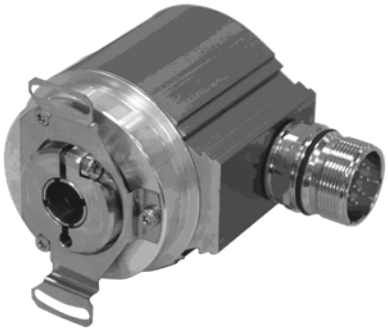

Specifications

Supply voltage	11–27 VDC
No-load current consumption	< 350 mA
Total resolution [1]	≤ 25 bits
Number of steps per revolution [1]	≤ 8,192
Number of rotations, standard [1]	≤ 4,096
Number of rotations, extended [1]	≤ 256,000
SSI	Synchronous Serial Interface
Clock input	Optocoupler
Data output	RS-422, 2-wire
Clock frequency	80 kHz – 1 MHz
Monostable time t_M	16 µs ≤ t_M ≤ 25 µs (20 µs typical)
Output code [1]	Binary, Gray, BCD
Output format [1]	Standard, Tannenbaum, SSI + CRC, 26-bit cycle, variable number of data bits
Negative values [1]	Sign and magnitude, twos complement
SSI or parallel special bits [1]	Limit switch, overspeed, direction indication, motion indication, error indication, parity
F/R [1]	Counting direction
Preset [1]	Electronic alignment
Logic levels	"0" < +2 VDC; "1" = supply voltage
Permissible mechanical speed	≤ 12,000 rpm
Shaft load	Own mass
Bearing life	≥ 3.9 x 10^{10} revolutions at
- speed	≤ 6,000 rpm
- operating temperature	≤ 60 °C
Shaft diameter [mm]	10H7
Permissible angular acceleration	≤ 10^4 rad/s^2
Moment of inertia	2.5 x 10^{-6} kg m^2 (typical)
Start-up torque at 20 °C	2 Ncm (typical)
Weight	0.3–0.5 kg
Optional	
- incremental signals, RS422 levels	K1+, K1-, K2+, K2- with 1024 or 2048 pulses

[1)] Configurable parameter

Ambient conditions

Vibration (EN 60068-2-6:1996)	≤ 100 m/s^2, sinusoidal 50–2,000 Hz
Shock (EN 60068-2-27:1995)	≤ 1000 m/s^2, half-cycle sinusoidal 11 ms
EMC	
- Interference emission compliant with EN 61000-6-3:2007	
- Interference immunity compliant with EN 61000-6-2:2006	
Operating temperature	0 °C to +60 °C; optionally -20 °C to +70 °C
Storage temperature	-30 °C to +80 °C, dry
Relative humidity (EN 60068-3-4:2002)	98 %, non condensing
Enclosure rating (EN 60529:1991)[2]	IP65

[2)] With mating connector fitted and/or cable glands fitted and tightened

In addition to the angular position within a rotation, multiturn encoders detect multiple rotations. An internal reduction gear mechanism connected to the motor shaft is used to detect the number of turns. Consequently, the value measured by a multiturn encoder consists of the current angular position and the number of turns. As with incremental encoders, the reading is calculated and output via various interface modules, depending on the interface.

On request, a large range of motor frames can be fitted with sensor bearings. The output signal from the sensor allows the direction of rotation to be determined, among other things. The number of possible pulse counts depends on the frame size. Please enquire for more information.

Motor and encoder

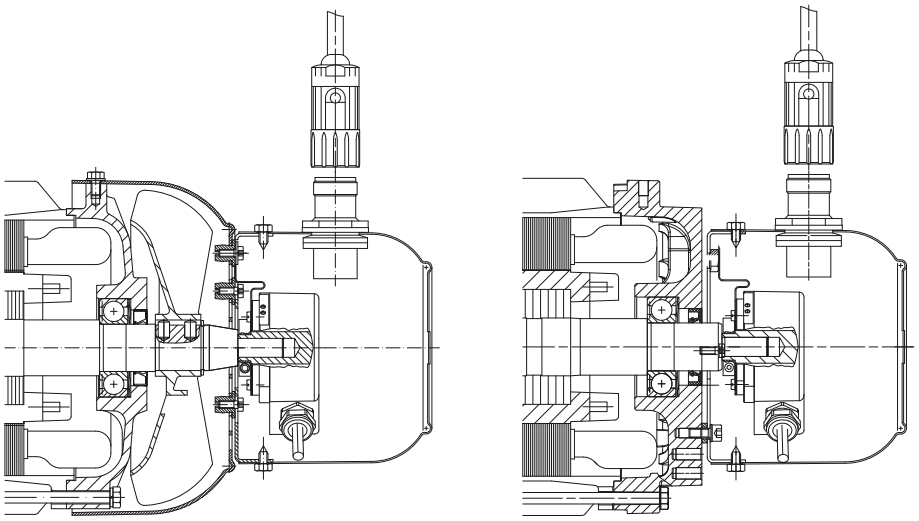

Motor, brake and encoder

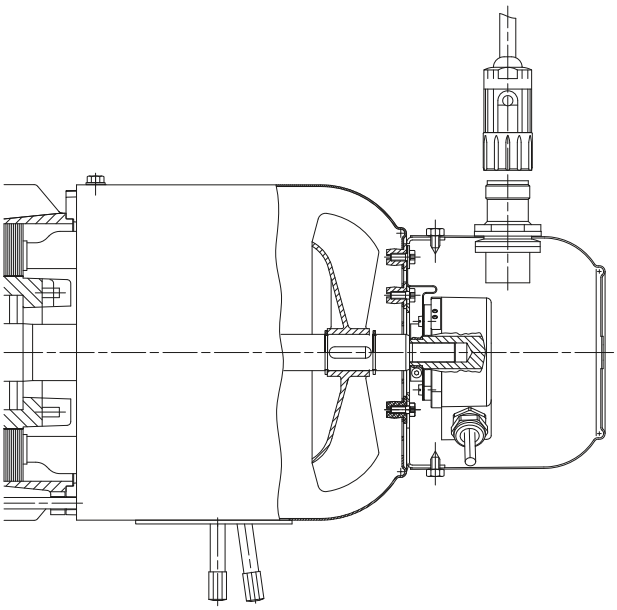

Motor and forced ventilation

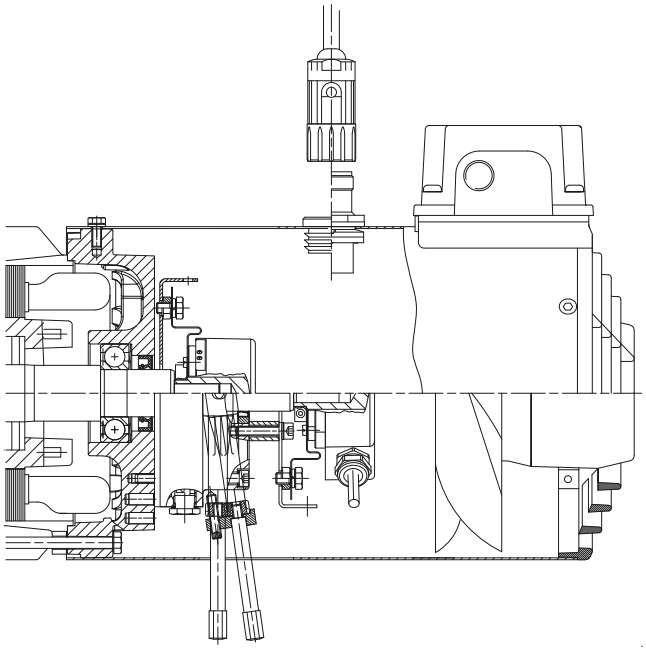

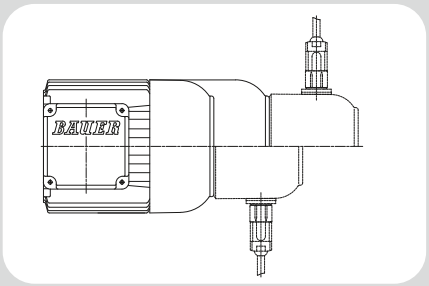

16

Motor Mounted Components - Dimensions

Dimensions 767
Standard terminal box 767
Terminal box screwed on 768
Terminal box for plug-connector 769
Standard brake 770
“Heavy-Duty“ - brake 771
Motor with back stop 772
Motor with second shaft end 773
Motors with brake and second shaft end 774
Motor with “heavy duty“ brake and second shaft end 775
Motor with protective hood 776
Motor with independent fan 777
Motor with brake and independent fan 778
Motor with encoder with built-on independent fan 779
Motor with brake and encoder with built-on independent fan 780
Motor with encoder 781
Motor with “heavy duty“ encoder 782
Motor with brake and encoder 783
Motor with “heavy duty“ brake and encoder 784
Motor in IEC design 785

Standard terminal box

D..04.. - D..11..

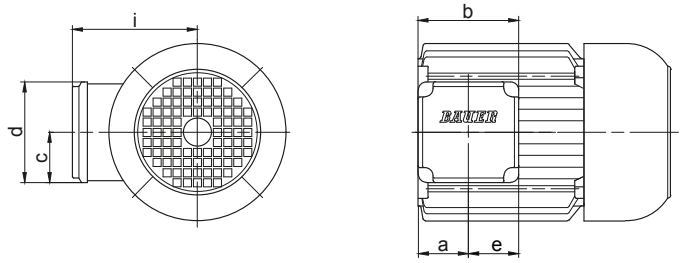

D..13..

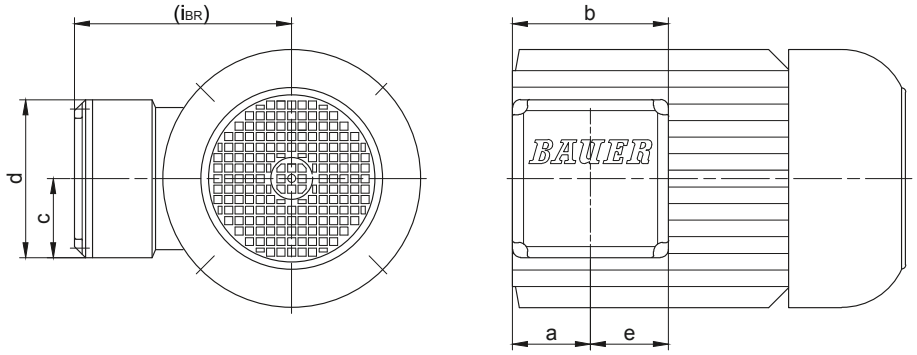

D..16..-D..22

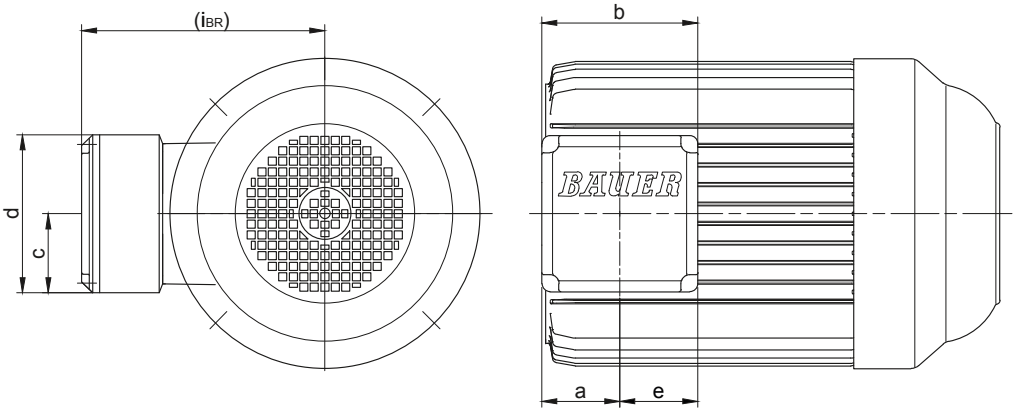

Motor/ Motor with brake	Dimensions a	b	c	d	e	i/i_{BR}	Code	Cable entry Major (M)	Next to (N)	max. spanner width for cable entry gland
D..04..	42.5	88	44	88	44	90	KAG1	M=2xM20x1.5	-	24
D..05..	50	100	50	100	50	101.5	KAG2	M=2xM25x1.5	-	29
D..06..	50	100	50	100	50	101.5	KAG2	M=2xM25x1.5	-	29
D..07..	50	100	50	100	50	101.5	KAG2	M=2xM25x1.5	-	29
D..08..	50	100	50	100	50	116	KAG2	M=2xM25x1.5	-	29
D..09..	50	100	50	100	50	125.5	KAG2	M=2xM25x1.5	-	29
D..11..	66.5	133	66.5	133	66.5	165	KAG3	M=2xM32x1.5	-	-
D..13..	78	156	78.5	158	78	217	TB322	M=2xM40x1.5	N=2xM25x1.5	-
D..16..	74	156	78.5	158	78	243	TB322	M=2xM40x1.5	N=2xM25x1.5	-
D..18..	94	200	100.5	201	100	288	TB422	M=2xM50x1.5	N=2xM25x1.5	-
D..20L	100	200	100.5	201	100	303.5	TB422	M=2xM50x1.5	N=2xM25x1.5	-
D..22S	100	200	100.5	201	100	303.5	TB422	M=2xM50x1.5	N=2xM25x1.5	-
D..22M	100	200	100.5	201	100	303.5	TB422	M=2xM50x1.5	N=2xM25x1.5	-
Dimensions in millimetres (mm)										

The actual gearbox design can vary from the geometry shown. Generate drive specific 3D and 2D geometries under www.BauerCat.com.

Motor-mounted components

Dimensions

Terminal box screwed on

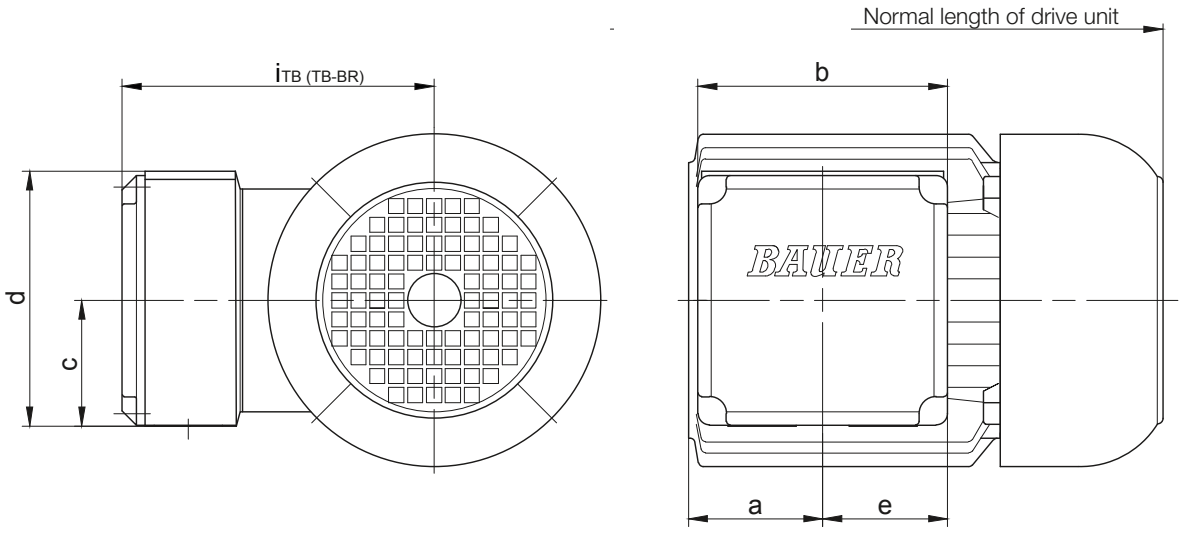

Motor	Dimensions						Code	Cableentry	
	a	b	c	d	e	$i_{TB(TB-BR)}$		Major (M)	Minor (N)
D04..	30	90	47.5	95	45	112	TB122..	M=2xM25x1.5	N=2xM20x1.5
D..05..	57	90	47.5	95	45	117	TB122..	M=2xM25x1.5	N=2xM20x1.5
D..06..	45	90	47.5	95	45	118	TB122..	M=2xM25x1.5	N=2xM20x1.5
D..07..	45	90	47.5	95	45	118	TB122..	M=2xM25x1.5	N=2xM20x1.5
D..08..	41	90	47.5	95	45	135	TB122..	M=2xM25x1.5	N=2xM20x1.5
D..09..	62	132	66	135	71.5	164	TB222..	M=2xM32x1.5	N=2xM25x1.5
D..11..	62	132	66	135	71.5	181	TB222..	M=2xM32x1.5	N=2xM25x1.5
D..13..	78	156	78	158	83.5	216	TB322..	M=2xM40x1.5	N=2xM25x1.5
D..16..	74	156	78	158	83.5	242	TB322..	M=2xM40x1.5	N=2xM25x1.5
D..18..	94	200	100	201	105.5	287	TB422..	M=2xM50x1.5	N=2xM25x1.5
Motor with Brake	Dimensions						Code	Cableentry	
	a	b	c	d	e	$i_{TB(TB-BR)}$		Major (M)	Minor (N)
D04..	30	90	47.5	95	68	131.5	TBR122..	M=2xM25x1.5	N=1xM16x1.5
from D..05..	see standard motor								
Dimensions in millimetres (mm)									

The actual gearbox design can vary from the geometry shown. Generate drive specific 3D and 2D geometries under www.BauerCat.com.

Terminal box for plug-connector

Standard design (two brackets)

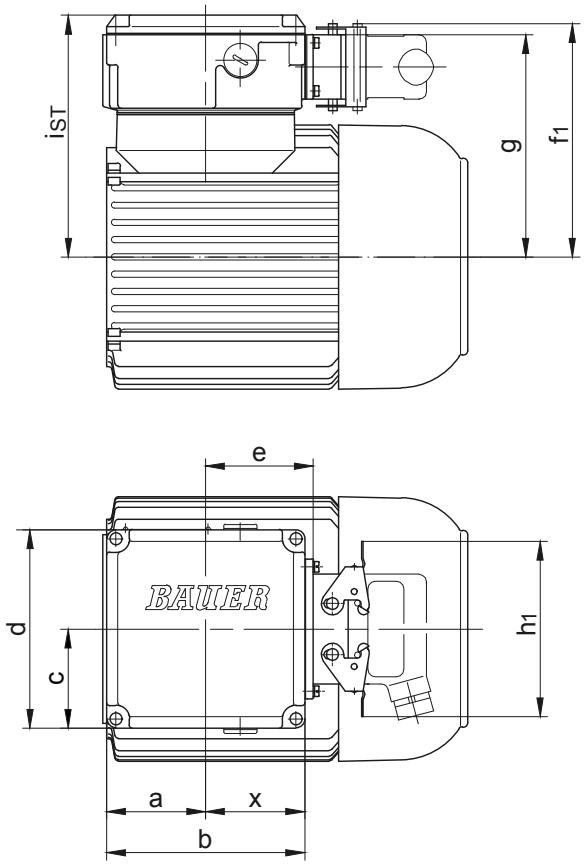

Optional for DESINA (one bracket)

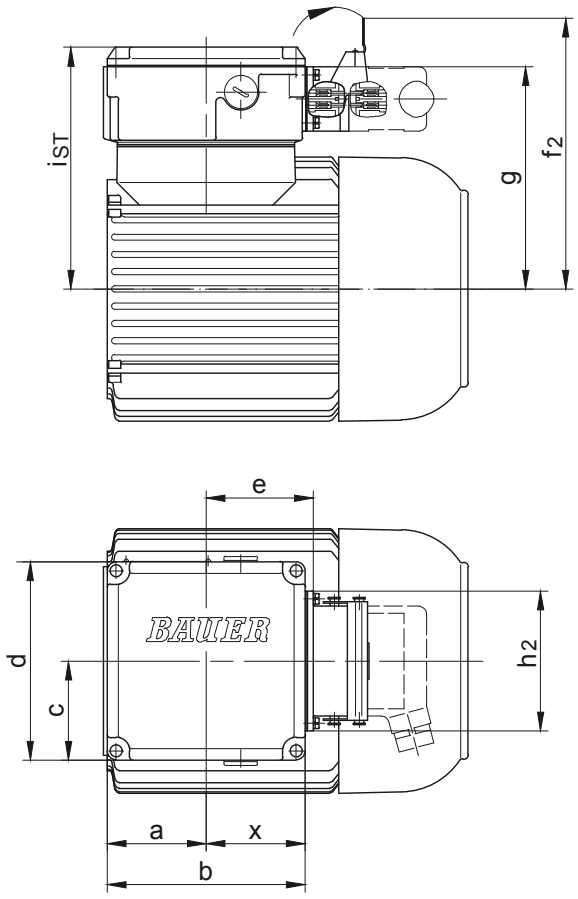

Fan cover geometry for D..16 and D..18, see dimensional drawing: terminal box as standard version

Motor	Size Terminal box	a	b	c	d	e	f_1	f_2	g	h_1	h_2	i_{ST}	x
D..04..	TBS1	30	90	52.5	106	49	118.5	147	111	117	93	124.5	46
D..05	TBS1	57	90	52.5	106	49	123.5	152	116	117	93	129.5	46
D..06	TBS1	45	90	52.5	106	49	125.5	154	118	117	93	131.5	46
D..07	TBS1	45	90	52.5	106	49	125.5	154	118	117	93	131.5	46
D..08	TBS1	45	90	52.5	106	49	143.5	172	136	117	93	149.5	46
D..09	TBS2	62	132	66	135	71.5	158.5	187	158	117	93	164	68.5
D..11	TBS2	62	132	66	135	71.5	175.5	191	166	117	93	181	68.5
D..13	TBS3	78	156	78	158	83.5	199	227.5	191.5	117	93	216	79.5
D..16	TBS3	74	156	78	158	83.5	225	253.5	225	117	93	242	79.5
D..18	TBS4	94	200	100	201	105.5	257	299	257	117	93	287	100.5
D..20L	TBS4	94	200	100	201	105.5	274	299	266.5	117	93	303.5	100.5
D..22S	TBS4	94	200	100	201	105.5	274	299	266.5	117	93	303.5	100.5
D..22M													
Dimensions in millimetres (mm)													

Motor-mounted components

Dimensions

Standard brake

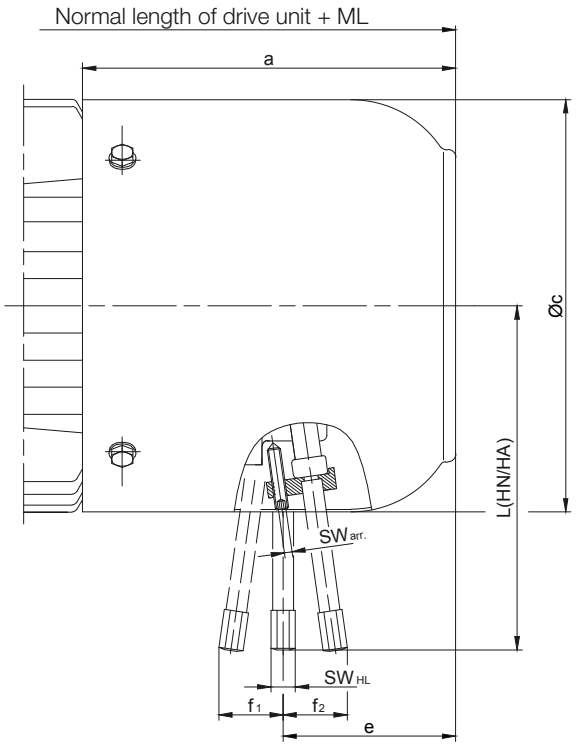

Motor	Brake	ML (mm) Additional length with brake	Dimensions (mm) a	Øc	e	f_1	f_2	L(HA/HN)	SW_{HL}	$SW_{arr.}$	Additional weight kg
D..04..	E003	43.5	97	110.5	58.5	20.5	24	96/102	11	11	1.0
D..05..		42	102	123	60						
D..06..					58.5						
D..07..	E003/E004										
D..08..	ES(X)010	66	141	156	68	-	29	132	8	2.5	2.6
D..09..	ES(X)010	93	173	176	99	-	29	132	8	2.5	2.7
	ES(X)027				91	-	35.5	162			4.2
D..11..	ES(X)027	98	195	218	103	-	35.5	162	8	2.5	4.5
	ES(X)040				100	-	37	172			6.3
	ES(X)070				96	-	34.5	190	12	4	8.5
D..13..	ES(X)040	111	225	258	125	-	41	202	12	4	6.5
	ES(X)070				121	-	38	225			8.5
	ES(X)125				116	-	45	223			12.5
D..16..	ES(X)125	144	290	310	148	-	48.5	244	12	4	13.5
	ES(X)200				141	-	50	256			19
	ES(X)300				112	-					22
D..18..	ES(X)250	150	339	348	153	-	58.5	286	12	4	28
	ZS(X)500				123	-			19	5	30
D..20L	ES(X)250	127.5	399	363	183	49	-	286	19	5	27.5
	ZS(X)500				152.5						
	ZS(X)800				149			313			
D..22S	ES(X)250	127.5	399	363	183	49	-	286	19	5	277.7
	ZS(X)500				152.5						
	ZS(X)800				149			313			
D..22M	ES(X)250	127.5	399	363	183	49	-	286	19	5	61.5
	ZS(X)500				152.5						
	ZS(X)800				149			313			

HA = manual release lockable
HN = manual release not lockable

The actual gearbox design can vary from the geometry shown. Generate drive specific 3D and 2D geometries under www.BauerCat.com.

“Heavy-Duty“ - brake

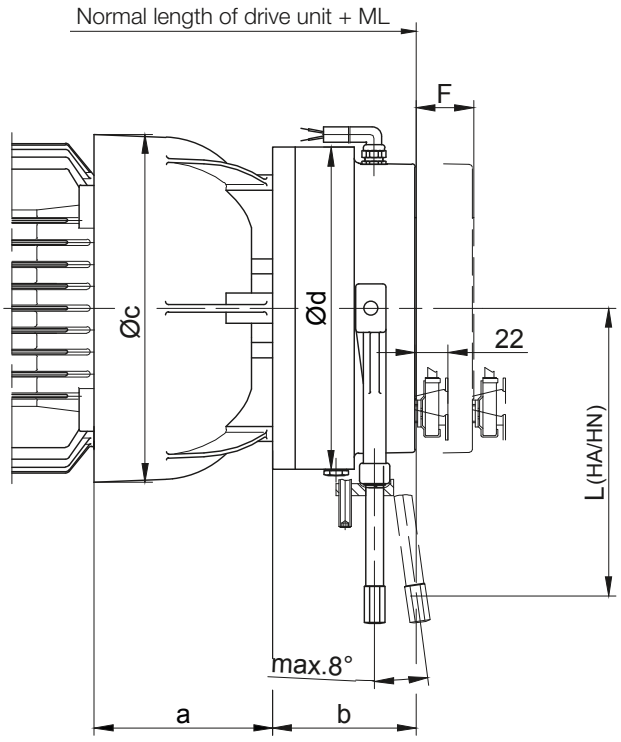

Motor	Brake	Additional length with brake (mm)		Dimensions (mm)					Additional weight
		ML Standard	ML Microswitch	a	b	c	Ød	L (HA/HN)	kg
D..08..	EH(X)010	74	96	83,5	62,5	166	120	132	4,2
D..08..	EH(X)027	79	101	83.5	66.5	166	145	162	5.5
D..09..	EH(X)027	82,5	104,5	102	70,5	191	145		7,6
D..09..	EH(X)040	90	112	102	73	191	168	172	8.3
D..11..	EH(X)070	104	126	120	85	231	188	189,5	15,2
D..11..	EH(X)125	114	136	120	95	231	213	208.5	19.5
D..13..	EH(X)200	128	150	140	106	274.5	245	221	29.3
D..16..	EH(X)400	141	163	155	124	326	324	313	55.8
D..18..		152	174	183		366			61

HA = manual release lockable
HN = manual release not lockable

The actual gearbox design can vary from the geometry shown. Generate drive specific 3D and 2D geometries under www.BauerCat.com.

Motor with back stop

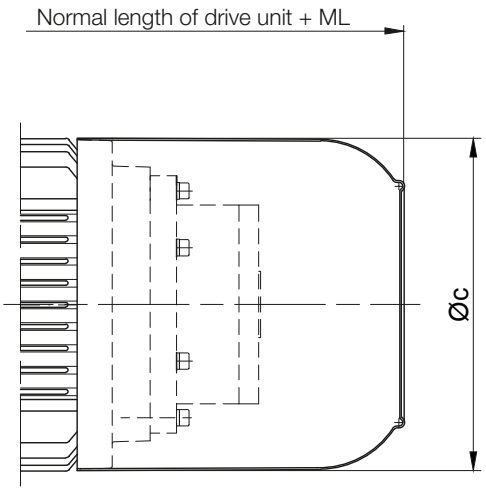

Motor	ML (mm) Additional length with backstop	Dimensions (mm) c	Additional weight kg
D..08..	66	156	6.5
D..09..	93	181	6.5
D..11..	98	228	8
D..13..	111	258	13.5
D..16..	144	310	16
D..18..	150	348	17
D..20L	-	363	9.5
D..22S			
D..22M			

The actual gearbox design can vary from the geometry shown. Generate drive specific 3D and 2D geometries under www.BauerCat.com.

Motor with second shaft end

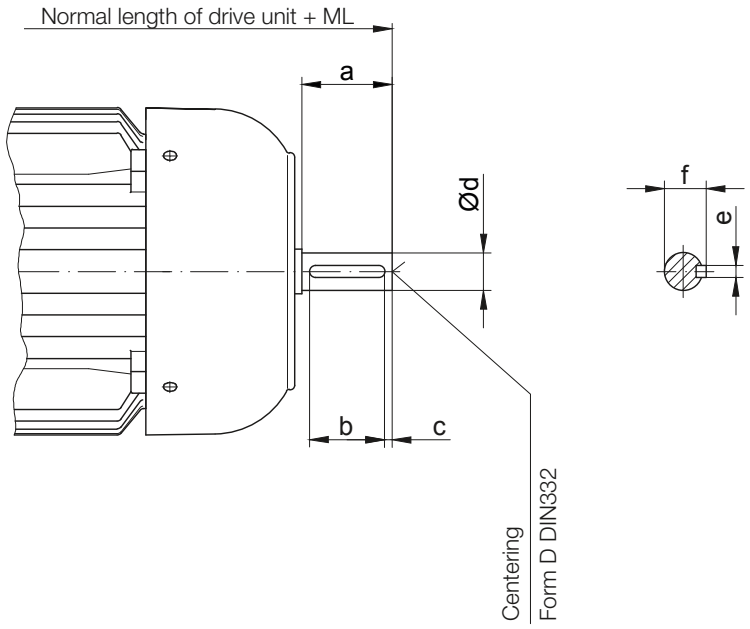

Motor	ML (mm)	Dimensions (mm)						Centering
	Additional length with second shaft end	a	b	c	d	e	f	DIN 332
D..04..	20	15	-	-	8_{g6}	-	-	-
D..05..	25	20	-	-	10_{k6}	-	-	-
D..06..	25	20	-	-	10_{k6}	-	-	-
D..07..	25.5	20	-	-	10_{k6}	-	-	-
D..08..	45	40	30	5	16_{k6}	5	18	D5
D..09..	55	50	40	5	20_{k6}	6	22.5	D5
D..11..	65	60	50	5	25_{k6}	8	28	D8
D..13..	85	80	60	10	35_{k6}	10	38	D12
D..16..	115	110	90	10	40_{k6}	12	43	D16
D..18..	115	110	90	10	45_{k6}	14	48.5	D16
D..20L	115	110	90	10	45_{k6}	14	48.5	D16
D..22S	115	110	90	10	45_{k6}	14	48.5	D16
D..22M								

The actual gearbox design can vary from the geometry shown. Generate drive specific 3D and 2D geometries under www.BauerCat.com.

Motors with brake and second shaft end

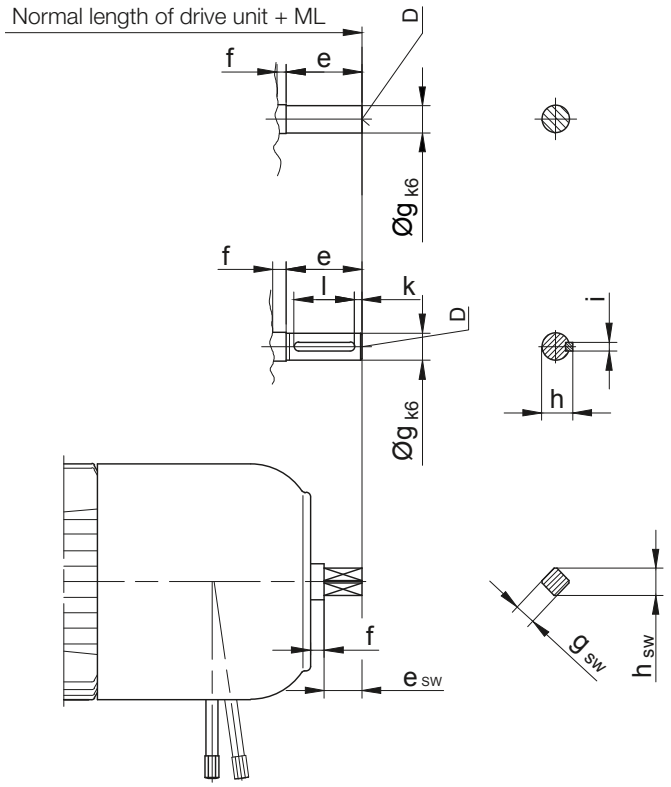

Motor	Brake	Additional length (mm)		Dimensions (mm)											Centering	
		ML	ML_{SW}	e	e_{SW}	f	g	g_{SW}	h	h_{SW}	i	k	l		DIN 332	SW
D..04..	E003	63	-	15	-	5	8	-	-	-	-	-	-		-	-
D..05..				20			10									
D..06..																
D..07..	E003/E004															
D..08..	ES(X)..	121	96*	50	25*	5	18	SW14*	20.5	18*	6	5	40		D6	D4*
D..09..		98	123*													
D..11..		153.5*	128	50*	25		20*	SW14	22.5*	18	6*	5*	40*		D6*	D4
D..13..		176*	156	60*	40		28*	SW22	31*	28	8*		50*		D10*	D10
D..16..	ES(X)../ZS(X)..	208.5*	188.5			4.5										
D..18..		359*	194.5			5										
D..20L	ES(X)../ZS(X)..	127.5*	172.5	60*	40	5	28*	SW22	31*	28	8*	5*	50*		D10*	D10
D..22S																
D..22M																
* special design with manual release																

The actual gearbox design can vary from the geometry shown. Generate drive specific 3D and 2D geometries under www.BauerCat.com.

Motor with “heavy duty“ brake and second shaft end

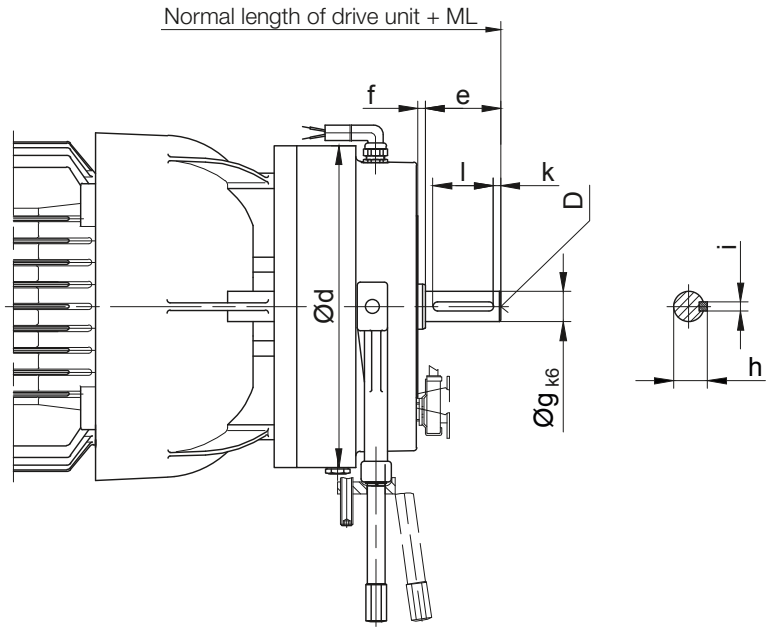

Motor	Brake	ML (mm) Additional length with encoder and brake	Dimensions (mm) Ød	e	f	Øg	h	i	k	k	Centering D 332	Additional weight kg
D..08..	EH(X)027	132	145	50	4	18	20.5	6	5	6	D6	6
D..09..	EH(X)040	144	168		5							9
D..11..	EH(X)125	169	213			20	22.5					20
D..13..	EH(X)200	192	245	60		28	31	8		8	D10	29.5
D..16..	EH(X)400	205.5	324									56
D..18..		216.5				30	33					61

The actual gearbox design can vary from the geometry shown. Generate drive specific 3D and 2D geometries under www.BauerCat.com.

Dimensions

Motor with protective hood

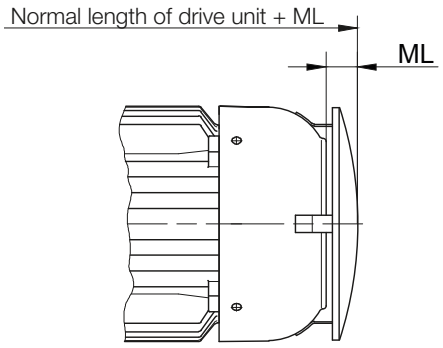

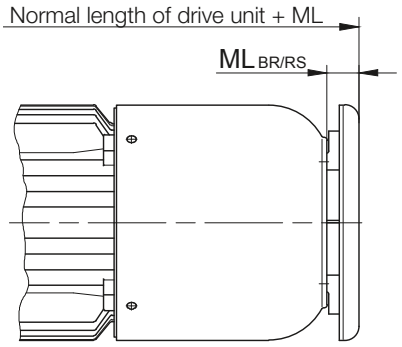

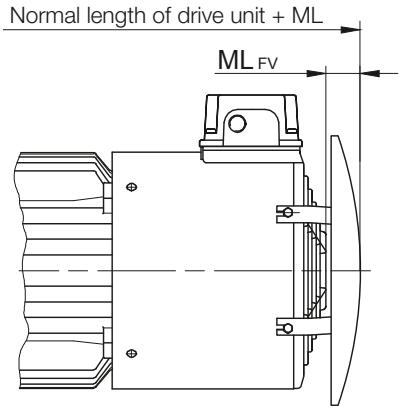

Motor	ML (mm) Additional length with attached protective cover				Additional weight
	ML	ML_{BR}	ML_{RS}	ML_{FV}	kg
D..04..	16	-	-	-	0.15
D..05..	18	-	-	-	0.15
D..06..	18	-	-	-	0.15
D..07..	18	-	-	-	0.15
D..08..	14.5	24.5	24.5	40	0.20
D..09..	22	24.5	24.5	30	0.30
D..11..	29	29.5	29.5	33	0.40
D..13..	30	29.5	29.5	25	0.6
D..16..	30.5	34.5	34.5	32	1.8
D..18..	30.5	34.5	34.5	32	5.5
D..20L	31	31	31	31	6.4
D..22S	31	31	31	31	6.4
D..22M	31	31	31	31	6.4

The actual gearbox design can vary from the geometry shown. Generate drive specific 3D and 2D geometries under www.BauerCat.com.

Motor with independent fan

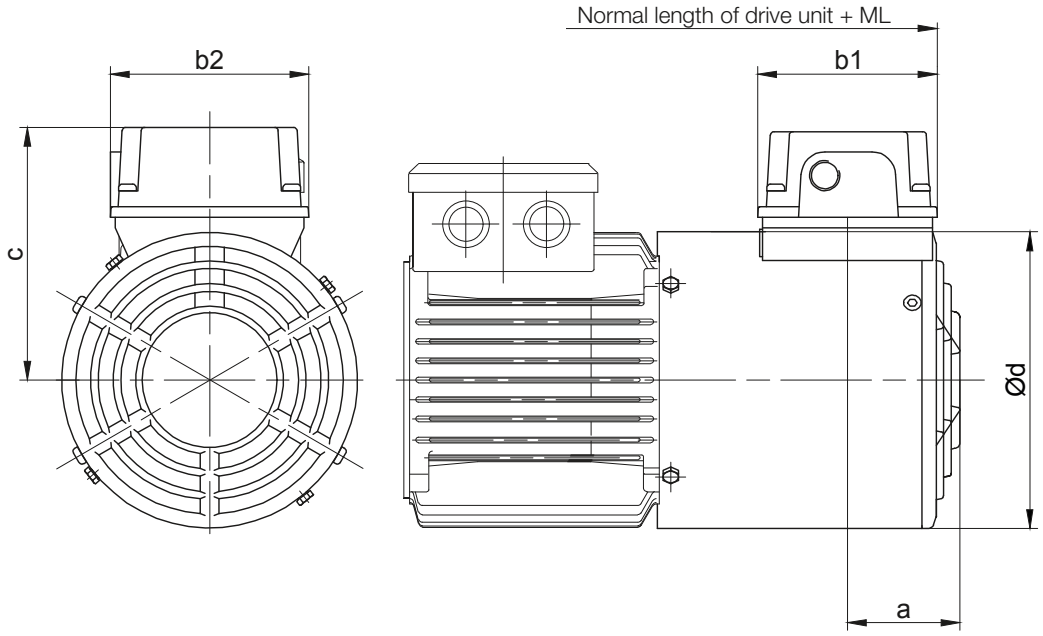

Drive Motor	Fan Motor	kW	r/min	400 V A	ML (mm) Additional length with forced cooling fan	Dimensions (mm) a	b1	b2	c	d	Additional weight ~kg
D..08..	FV D08	0.019	2670	0.029	92	69.5	107	105	134	157	2.2
D..09..	FV D09	0.046	2820	0.106	97	69.5	107	105	143	177	2.7
D..11..	FV D11	0.051	2660	0.110	97	79.5	107	105	162.5	219	3.2
D..13..	FV D13	0.073	2820	0.169	119	78.8	107	105	164	258	4.6
D..16*	FV D16	0.154	2760	0.347	144	78.8	107	105	185	311	6.4
D..18*	FV D18	0.154	2760	0.347	303	78.8	107	105	211	348	8.4
* with bayonet joint											

Motor-mounted components

Dimensions

Motor with brake and independent fan

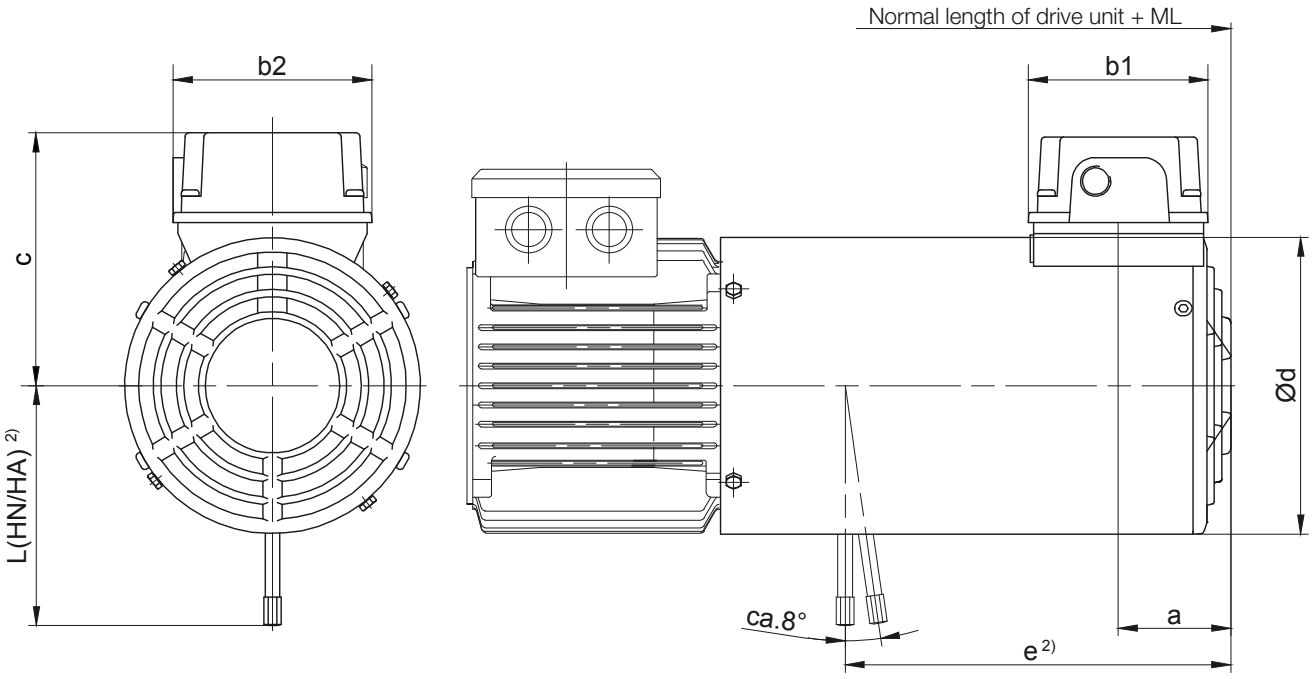

Motor	Brake	ML (mm)[1] Additional length with brake and forced ventilation	Dimensions (mm) a	b1	b2	c	Ød	e[2]	L(HA/HN)[2]	Additional weight ~kg
D..08..	ES(X)010	202	59	107	105	134	157	204	132	5.0
D..09..	ES(X)010	214	69.5	107	105	143	177	220	132	5.5
	ES(X)027							212	162	7.5
D..11*	ES(X)027	221	69.5	107	105	162.5	219	226	162	8.0
	ES(X)040							223	172	10
	ES(X)070							218	184	12
D..13*	ES(X)040	237	79.5	107	105	164	164	254	202	11.5
	ES(X)070							250	225	13.5
	ES(X)125							245	223	17.5
D..16*	ES(X)125	294	78.8	107	105	185	311	298	244	19.5
	ES(X)200							291	256	25
	ES(X)300							262		27
D..18*	ES(X)250	303	78.8	107	105	211	348	307	286	37
	ES(X)500							277		38.5

* with bayonet joint

[1]The additional length is for normal motor unit without brake.
Other dimensions see the appropriate normal dimensioned sketch.

[2]Brake release on request

HA = manual release lockable

HN = manual release not lockable

16

Motor with encoder with built-on independent fan

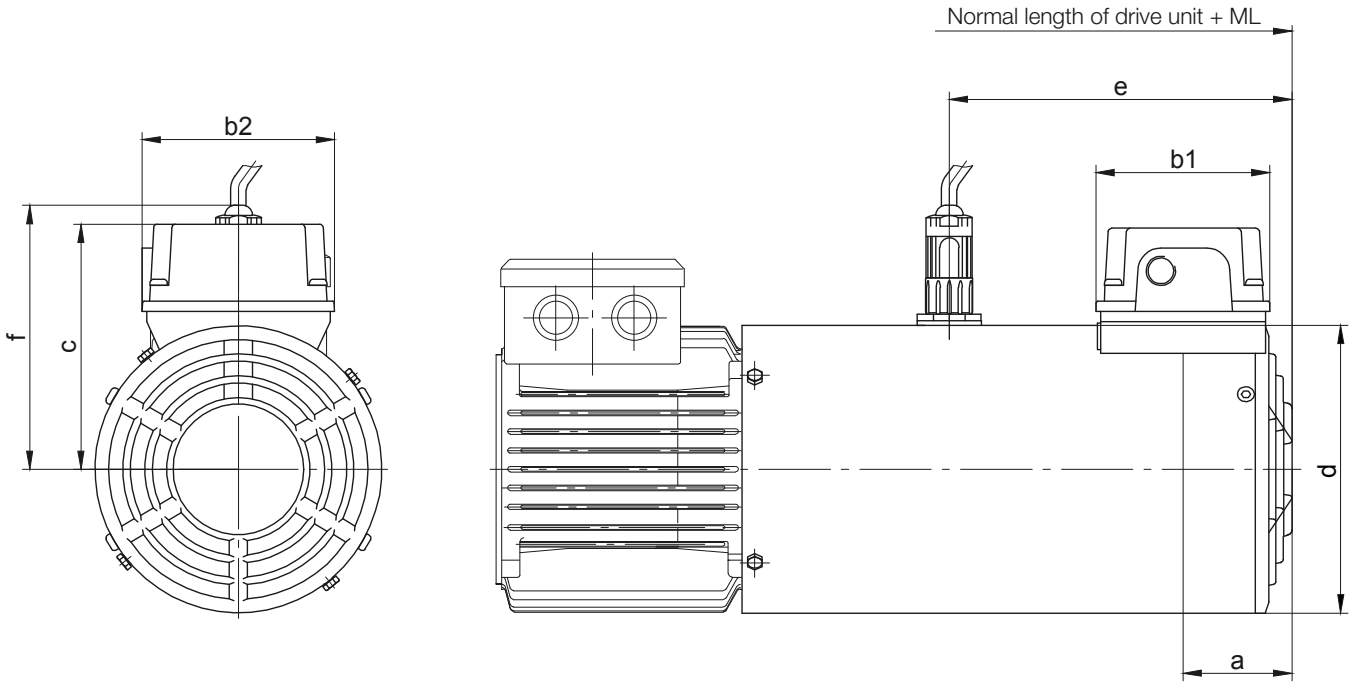

Motor	ML (mm)[1)]	Dimensions (mm)							Additional weight
	Additional length with encoder and forced ventilation	a	b1	b2	c	d	e	f	~kg
D..08..	202	59	107	105	134	157	187	144	2.6
D..09..	214	69.5	107	105	143	177	192	153.5	3.3
D..11*	221	69.5	107	105	162.5	218	192	-	4.0
D..13*	240	79.5	107	105	164	258	217	-	5.7
D..16*	294	78.8	107	105	185	311	252	-	7.9
D..18*	303	78.8	107	105	211	348	267	-	10.9

* with bayonet joint
[1)] The additional length is for normal motor unit without brake.
Other dimensions see the appropriate normal dimensioned sketch.

The actual gearbox design can vary from the geometry shown. Generate drive specific 3D and 2D geometries under www.BauerCat.com.

Motor-mounted components

Dimensions

Motor with brake and encoder with built-on independent fan

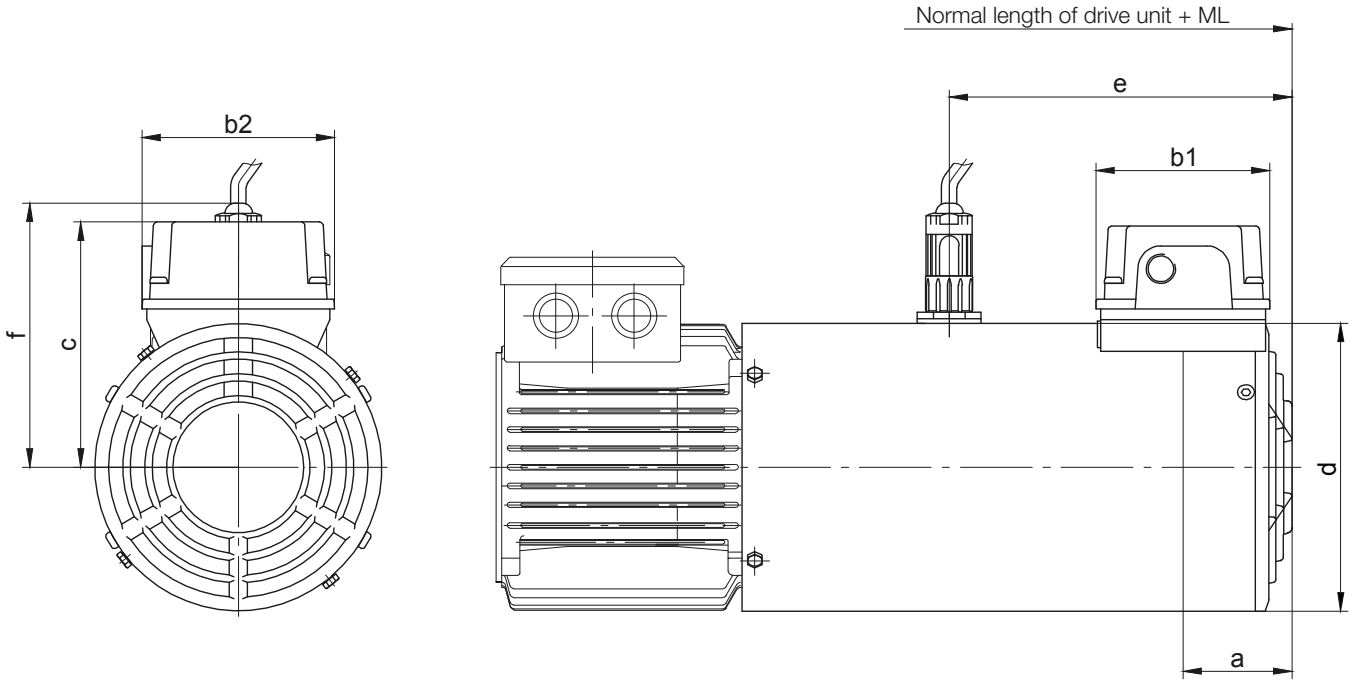

Motor	Brake	ML (mm)[1] Additional length with brake, encoder and forced ventilation	Dimensions (mm) a	b1	b2	c	Ød	e[2]	g	h	L(HA/HN)[2]	Additional weight ~kg
D..08..	ES(X)010	202	59	107	105	134	157	204	150	150	132	6.0
D..09..	ES(X)010	214	69.5	107	105	143	177	220	160	160	132	6.5
	ES(X)027							212	160		162	8.5
D..11*	ES(X)027	221	69.5	107	105	162.5	219	226	155	175	162	9.0
	ES(X)040							223	155		172	11.5
	ES(X)070							218	155		184	13.5
D..13*	ES(X)040	240	79.5	107	105	164	258	254	175	194.5	202	13
	ES(X)070							250	175		225	15
	ES(X)125							245	175		223	19
D..16*	ES(X)125	294	78.8	107	105	185	311	298	195	221	244	21
	ES(X)200							291	195		256	27
	ES(X)300							262	195			29
D..18*	ES(X)250	303	78.8	107	105	211	348	207	212	239.5	286	39
	ES(X)500							277	212			40.5

* with bayonet joint

[1] The additional length is for normal motor unit without brake.
Other dimensions see the appropriate normal dimensioned sketch.

[2] Brake release on request

HA = manual release lockable

HN = manual release not lockable

The actual gearbox design can vary from the geometry shown. Generate drive specific 3D and 2D geometries under www.BauerCat.com.

Motor with encoder

D..04..

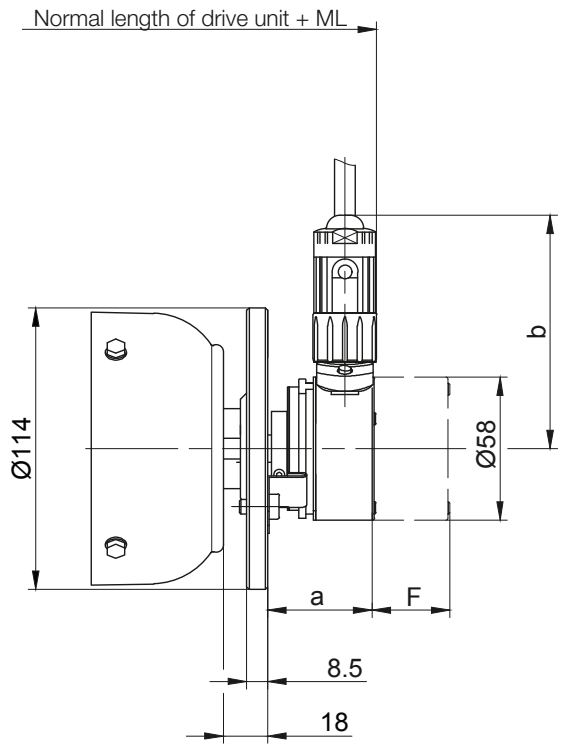

D..05.. - D ..22..

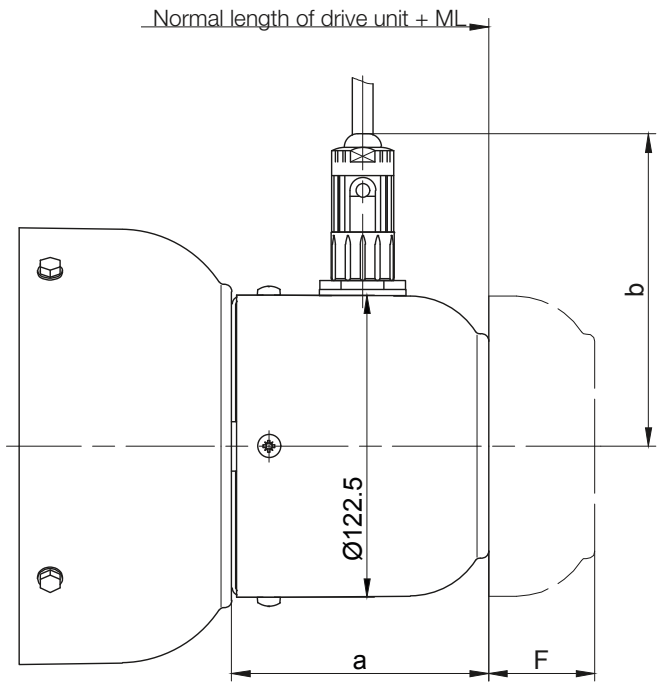

Fan cover geometry for D..16 and D..22, see dimensional drawing: terminal box as standard version

Motor	ML (mm) Additional length with encoder	Dimensions (mm)				Additional weight	Free space for removing encoder „F“	
		Incremental encoder		Absolute encoder			Incremental encoder	Absolute encoder
		a	c	a	b	kg		
D..04..	62.5	43.5	95	69.5	109.5	0.7	30	55
D..05..	103	98.5	127	98.5	127	0.9	63	88
D..06..								
D..07..								
D..08..	107	107.5		107.5			41	66
D..09..		104		104		0.8	43	68
D..11..								
D..13..								
D..16..	110							
D..18..								
D..20L	106	106		106		1.2		
D..22S								
D..22M								

Motor-mounted components

Dimensions

Motor with “heavy duty“ encoder

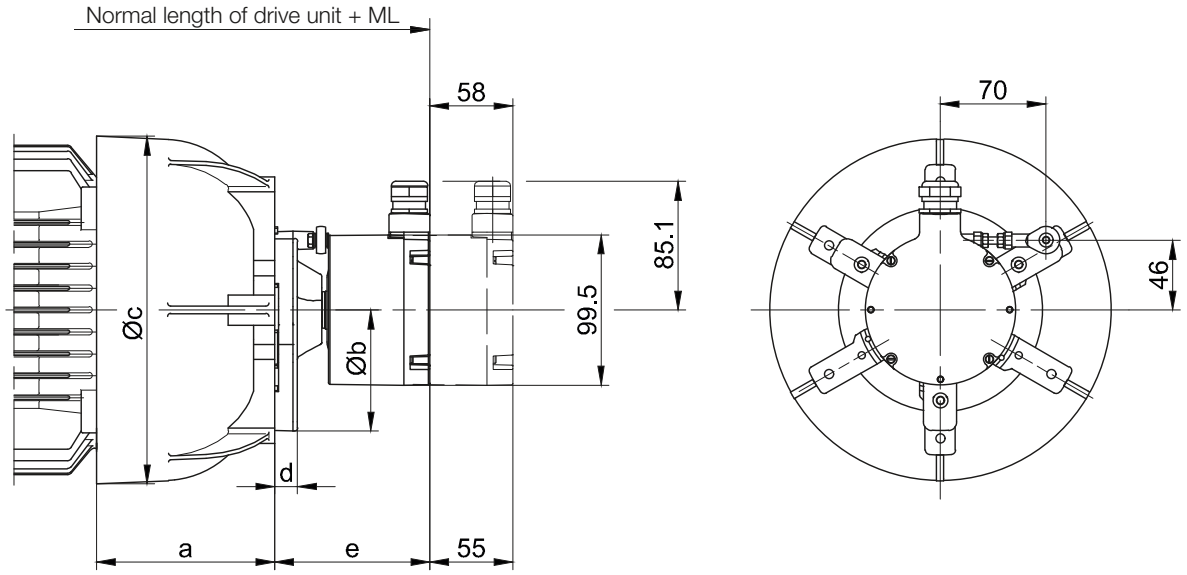

Motor	ML (mm) Additional length with encoder	Dimensions (mm)					Additional weight kg
		a	b	c	d	e	
D..08..	114	83.5	160	166	15	102.5	2
D..09..	118.5	102		191			
D..11..	121.5	120		231			5.4
D..13..	115.5	140	185	274.5	17	94.5	8.6
D..16..	113.5	155		326			9.6
D..18..	122.5	183		366			11.5

The actual gearbox design can vary from the geometry shown. Generate drive specific 3D and 2D geometries under www.BauerCat.com.

Motor with brake and encoder

D..04..

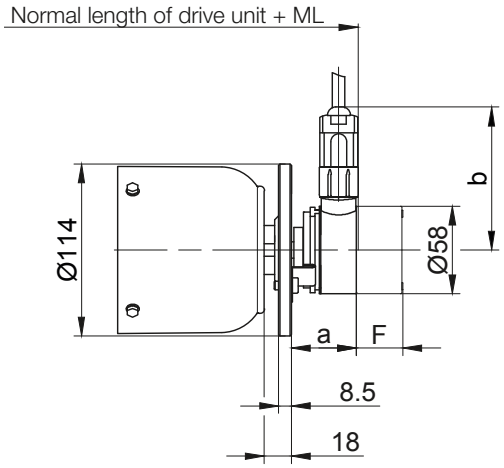

D..05.. - D..07..

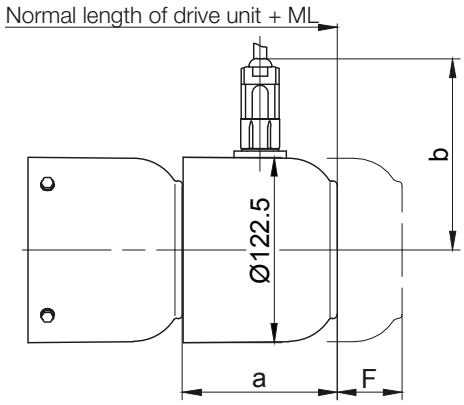

D..08.. - D..22..

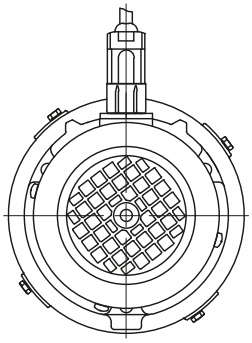

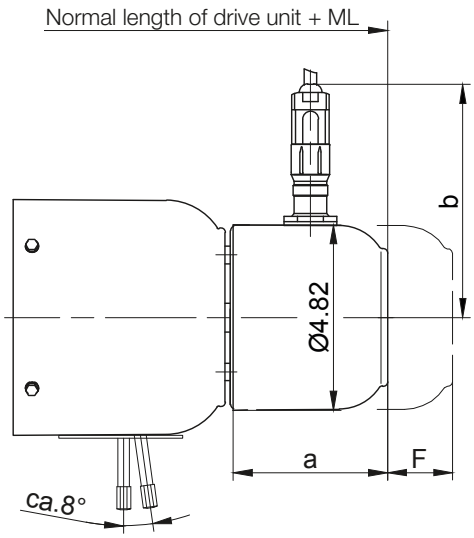

Motor	Brake	ML (mm)	Dimensions (mm)				Additional weight	Free space for removing encoder „F“	
		Additional length with brake and encoder	Incremental encoder		Absolute encoder			Incremental encoder	Absolute encoder
			a	c	a	b	kg		
D..04..	E003	105.5	43.5	95	69.5	109.5	0.7	30	55
D..05..		145	102	127	102	127	0.9	63	88
D..06..									
D..07..	E003/E004								
D..08..	ES(X)..	173.5					0.8	49	74
D..09..	ES(X)..	197							
D..11..	ES(X)..	200							
D..13..	ES(X)..	212							
D..16..	ES(X)..ZS(X)	248	104						
D..18..	ES(X)..ZS(X)	247.5							
D..20L	ES(X)..ZS(X)	233.5	106				1.2		
D..22S	ES(X)..ZS(X)								
D..22M	ES(X)..ZS(X)								

16

The actual gearbox design can vary from the geometry shown. Generate drive specific 3D and 2D geometries under www.BauerCat.com.

Motor-mounted components

Dimensions

Motor with “heavy duty“ brake and encoder

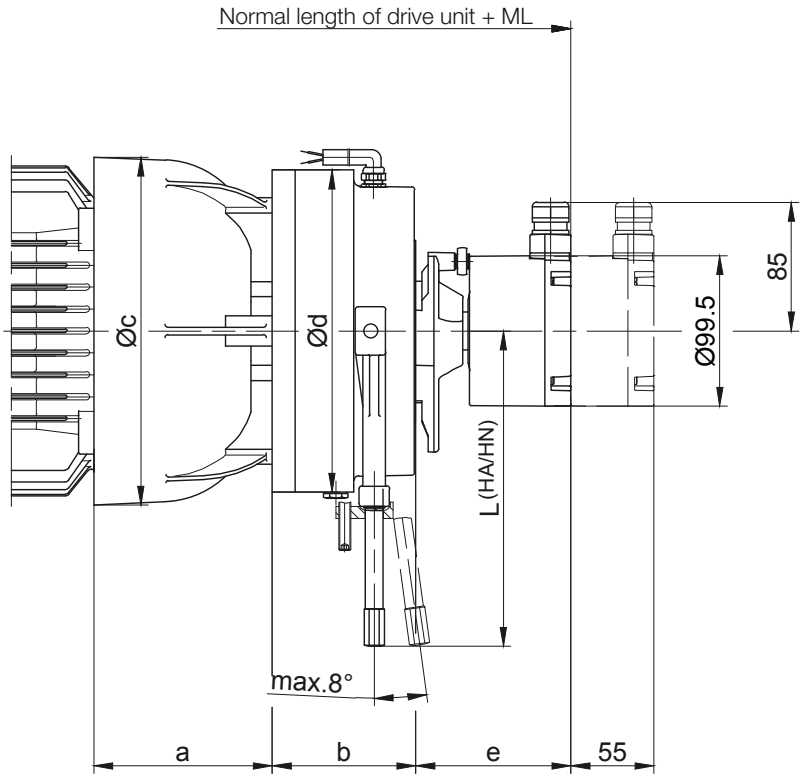

Motor	Brake	ML (mm) Additional length with brake and encoder	Dimensions (mm) a	b	c	Ød	e	L (HA/HN)	Additional weight kg
D..08..	EH(X)027	180.5	83.5	66.5	166	145	102.5	162	7.1
D..09..	EH(X)040	191.5	102	73	191	168		172	10
D..11..	EH(X)125	216.5	120	95	231	213		208.5	21.4
D..13..	EH(X)200	259	140	106	274.5	245	94.5	221	32
D..16..	EH(X)400	243	155	124	326	324		313	58
D..18..		254	183		366				61

HA = manual release lockable
HN = manual release not lockable

16

The actual gearbox design can vary from the geometry shown. Generate drive specific 3D and 2D geometries under www.BauerCat.com.

Motor in IEC design

D..06 - D..18

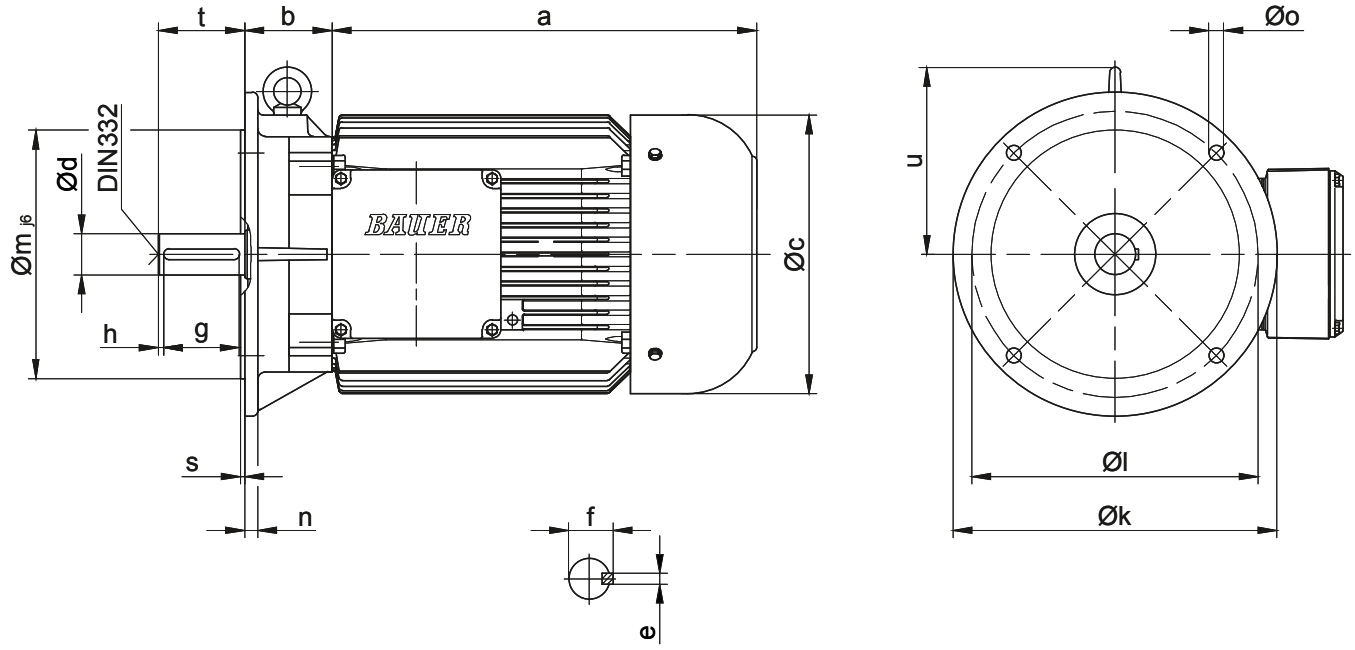

Fan cover geometry for D..16 and D..18, see dimensional drawing: terminal box as standard version

Motor	Dimensions (mm)																Centering
	a	b	c	d	e	f	g	h	k	l	m	n	o	s	t	u	DIN 332
D..06..A	170	45	123	11_{j6}	4	12.5	18	2.5	140	115	95	9	10	2.75	23	-	D4
D..07..A	190	45	123	11_{j6}	4	12.5	18	2.5	140	115	95	9	10	2.75	23	-	D4
D..08..A	200	49	156	19_{j6}	6	21.5	35	2.5	200	165	130	10	12	3.5	40	-	D4
D..08..B	230	49	156	19j6	6	21.5	35	2.5	200	165	130	10	12	3.5	40	-	D4
D..09..A	251	66	176	24_{j6}	8	27	40	5	200	165	130	10	12	3.5	50	128.5	D6
D..09..B	309	66	176	24j6	8	27	40	5	200	165	130	10	12	3.5	50	128.5	D6
D..11..A	319	75	218	28_{j6}	8	31	50	5	250	215	180	11	14.5	4	60	145.5	D10
D..11..B	387	75	218	28j6	8	31	50	5	250	215	180	11	14.5	4	60	145.5	D10
D..13..A	393	81	266	38_{k6}	10	41	70	5	300	265	230	12	14	4	80	173	D12
D..16..B	454.5	98.5	310	42_{k6}	12	45	90	10	350	300	250	13	18.5	5	110	215.5	D16
D..18..B	542	128.5	348	48^{k6}	14	51.5	100	5	350	300	250	15	18.5	5	110	218	D16

The actual gearbox design can vary from the geometry shown. Generate drive specific 3D and 2D geometries under www.BauerCat.com.

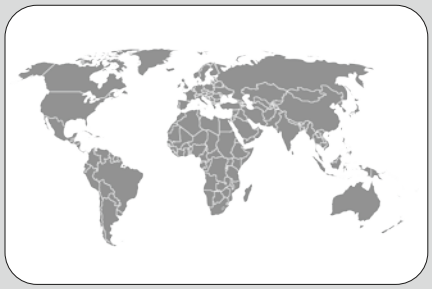

17

BAUER global

North America....789
Latin America....790
Europe....791
Eastern Europe....794
Middle East & Africa....795
APAC....797
China....798



North America



North America					
Canada	Bauer GMC	4020B Sladeview Crescent, Unit 5 L5L 6B1 Mississauga	Phone Fax	+1 (905) 814 5152 +1 (905) 814 5153	www.bauergmc.com
United States	Bauer Gear Motor LLC.	701 Carrier Drive NC 28216 Charlotte	Phone Fax	+1 (800) 3870130 +1 (732) 4698773	gm.bauerus@regalrexnord.com www.bauergears.com



Latin America



Latin America					
Belize	Transmisiones S.A.S	Cra. 69 B No. 21 A - 24 77158 Bogota / Colombia	Phone Fax	+57 (601) 9142177	info@transmisiones.de www.transmisiones.de
Bolivia	Transmisiones S.A.S	Cra. 69 B No. 21 A - 24 77158 Bogota / Colombia	Phone Fax	+57 (601) 9142177	info@transmisiones.de www.transmisiones.de
Brazil	MKN Acionamentos LTDA	Rua Marco Gagliano 264 Americanópolis 04412-120 São Paulo-SP	Phone Fax	+55 (11) 56215574 +55 (11) 56211406	mkn.aciona@terra.com.br
Brazil	RPN BRASIL LTDA	Rua Celinda Antonia, Quaino Santa Rosa 200-Salao 10, Jardim Luciane SP-1347-225 Americana	Phone Fax	+55 (19) 3601-4973	comercial@rpnbrasil.com.br
Chile	Ducasse Comercial	Av. Libertador Bdo. O'Higgins 1460 Santiago-Chile	Phone Fax	+56 (2) 23557000	contacto@ducasse.cl www.ducasse.cl
Colombia	Transmisiones S.A.S	Cra. 69 B No. 21 A - 24 77158 Bogota	Phone Fax	+57 (601) 9142177	info@transmisiones.de www.transmisiones.de
Costa Rica	Transmisiones S.A.S	Cra. 69 B No. 21 A - 24 77158 Bogota / Colombia	Phone Fax	+57 (601) 9142177	info@transmisiones.de www.transmisiones.de
Cuba	Transmisiones S.A.S	Cra. 69 B No. 21 A - 24 77158 Bogota / Colombia	Phone Fax	+57 (601) 9142177	info@transmisiones.de www.transmisiones.de
French Guiana	Transmisiones S.A.S	Cra. 69 B No. 21 A - 24 77158 Bogota / Colombia	Phone Fax	+57 (601) 9142177	info@transmisiones.de www.transmisiones.de
Guatemala	Juan Niemann & Cia. Ltda.	Apartado Postal 290 C/Mariscal Cruz, C.A. Guatemala Ciudad, C.A.	Phone Fax	+502 (331) 5454 +502 (334) 7453	jcniemann@jcniemann.com www.jcniemann.com/motorreductores
Guyana	Transmisiones S.A.S	Cra. 69 B No. 21 A - 24 77158 Bogota / Colombia	Phone Fax	+57 (601) 9142177	info@transmisiones.de www.transmisiones.de
Honduras	Transmisiones S.A.S	Cra. 69 B No. 21 A - 24 77158 Bogota / Colombia	Phone Fax	+57 (601) 9142177	info@transmisiones.de www.transmisiones.de
Mexico	Opeasa-Zugastek	2 Poniente 3102A Col. Amor 72140 Puebla	Phone Fax	+52 (222) 4036242	info@zugastek.com www.zugastek.com
Nicaragua	Transmisiones S.A.S	Cra. 69 B No. 21 A - 24 77158 Bogota / Colombia	Phone Fax	+57 (601) 9142177	info@transmisiones.de www.transmisiones.de
Panama	Transmisiones S.A.S	Cra. 69 B No. 21 A - 24 77158 Bogota / Colombia	Phone Fax	+57 (601) 9142177	info@transmisiones.de www.transmisiones.de
Paraguay	Transmisiones S.A.S	Cra. 69 B No. 21 A - 24 77158 Bogota / Colombia	Phone Fax	+57 (601) 9142177	info@transmisiones.de www.transmisiones.de
Peru	Transmisiones & Servicios S.A.C.	Alcanfores 981. of 601. 18 Miraflores - Lima	Phone Fax	+51 (1) 242 0862 +51 (1) 242 086221	info@transmisiones.pe www.transmisiones.pe
Uruguay	Tradinter S.R.L	Pereira de la luz 1327 11300 Montevideo	Phone Fax	+598 (2) 6221130 +598 (2) 6284691	
Venezuela	EMOTEC S.A.	Calle Johann Schafer, Edif. FHT, Piso 1, Oficina 1, Urb. Buena Vista, Caracas-Venezuela Urb. Sabana Grande Caracas	Phone Fax	+58 (212) 2715261 +58 (212) 2711838	ventas@emotecsa.com www.emotecsa.com



Europe



Europe					
Andora	TEM S.L. Bauer Gear Center for Spain and Portugal	Transmisiones Electromecánicas, Pol. Industrial Les Comes Calle Italia 11 Nave 9 08700 Igualada (Barcelona) / Spain	Phone Fax	+34 (93) 8056021 +34 (93) 8056022	info@tem-sl.com www.tem-sl.com
Austria	ESKO Elektromaschinen-bau GmbH	Ankerweg 8 8753 Fohnsdorf	Phone Fax	+43 (3573) 27570 +43 (3573) 27570-4	office@esko.at www.esko.at
Austria	Mangold Elektro-maschinen GmbH	Holzriedstr. 33 6960 Wolfurt	Phone Fax	+43 (5574) 64072-0 +43 (5574) 64072-9	info@mangoldgmbh.at www.mangoldgmbh.at
Austria	BIS Chemserv GmbH	Bau 28 St. Peter-Str. 25 Postfach 750 4021 Linz	Phone Fax	+43 (732) 69172278 +43 (732) 69173322	+43 (732) 69172278 +43 (732) 69173322
Austria	BIS Chemserv GmbH	Haiminger-Str. 1 84489 Burghausen / Germany	Phone Fax	+49 (867) 7977507 +49 (867) 7977510	 www.chemserv.at
Belgium	Regal Beloit Belgium NV c/o Bauer Gear Motor Europe GmbH	Heiveldekens 16 2250 Kontich	Phone Fax	+32 (0) 479221587	customercare.eu@regalrexnord.com www.bauergears.com
Belgium	emr NV/SA	Kruisstraat 61 C 9930 Lievegem	Phone Fax	+32 (9) 2515956 +32 (9) 2515891	emr@nvemr.be www.nvemr.be
Bosnia and Herzegovina	Indas Industry Assistance d.o.o.	Heroja Pinkija 95 YU-21000 Novi Sad Serbia and Montenegro	Phone Fax	+381(21) 4804800 +381(21) 4804808	office@indas.rs www.indas.rs
Bulgaria	NASA - D Ltd.	kv. Mladost IV bl.602, vh.1 (In front of Business Park Sofia) 1715 Sofia	Phone Fax	+359 (2) 9755065 +359 (2) 9755067	office@nasa-d.com www.nasa-d.com
Bulgaria	NASA - D Ltd.	12, Bitolya str. 9002 Varna	Phone Fax	+359 (52) 605995 +359 (52) 600498	varna@nasa-d.com www.nasa-d.com
Croatia	TALER ING d.o.o.	Jelovška cesta 43A 4264 Bohinjska Bistrica / Slovenia	Phone Fax	+386 (4) 5747128 +386 (4) 5747129	info@taler-ing.si www.taler-ing.si
Cyprus	Drivetech e.p.e.	Chrysostomou Smyrnis 124 18345 Moschato / Greece	Phone Fax	+30 (210) 7233318 +30 (210) 7233357	info@drivetech.gr www.drivetech.gr
Czech Republic	Jan Komárek-HMF	Sturova 15 415 02 Teplice	Phone Fax	+420 (417) 565616 +420 (417) 564455	tomas.abraham@navijama-hmf.cz www.navijarna-hmf.cz
Czech Republic	Huber CS s.r.o.	Cihlarska 19 602 00 Brno	Phone Fax	+420 541215635 +420 541216835	doskocil@hubercs.cz www.hubercs.cz
Denmark	Eegholm A/S	Grundtvigs allé 165-169 (Main office) Jyllandsgade 30, Hal 2 (Stock) 6400 Sönderborg	Phone Fax	+45 (73) 121212 +45 (73) 121213	eegholm@eegholm.dk www.eegholm.dk
Estonia	TECHVITAS OÜ	Tartu road 80J, 10112 Tallinn	Phone Fax	+372 (56) 700702	info@techvitas.ee www.techvitas.ee
Finland	Bauer Gear Motor	PL 2 01901 Nurmijärvi	Phone Fax	+358 50 306 2559	customercare.eu@regalrexnord.com www.bauergears.com
Finland	Sähkö-Team Oy	Pulttitie 10 00880 Helsinki	Phone Fax	+358 (207) 862330 +358 (207) 862339	korjaamo@sahko-team.fi www.sahko-team.fi
Finland	Tornion Sähköpojat Oy	Raidekatu 29 95420 Tornio	Phone Fax	+358 (400) 222401 +358 (16) 446853	markku.rantapaa@sahkopojat.fi www.sahkopojat.fi
France	Avenel	1, rue Lucien Fromage BP 1 76160 Darnetal (Nord-Quest/Normandie)	Phone Fax	+33 (0) 235085353 +33 (0) 235085608	infos@avenel.fr www.avenel.fr
France	Diceep	17-19 Route Nationale 54 280 Nancy-Laneuvelotte (Nord-Est)	Phone Fax	+33 (0) 383290343 +33 (0) 383214613	diceep@diceep.fr www.diceep.fr
France	LM Systèmes SARL	11 Avenue de la Madeleine 33170 Gradignan	Phone Fax	+33 (0) 556754607 +33 (0) 556879150	info@lmsystemes.com www.lmsystemes.com
France	TIMA Transmissions Mécaniques Industrielles des Alpes	33 rue du Béal ZI sud 38400 Saint-Martin-d'Hères	Phone Fax	+33 (0) 476244039 +33 (0) 476629658	b.majoux@tima.fr www.tima.fr
Germany	**Bauer Gear Motor GmbH**	**Eberhard-Bauer-Straße 37 73734 Esslingen**	**Phone Fax**	**+49 (711) 3518 0 +49 (711) 3518 381**	**customercare.eu@regalrexnord.com www.bauergears.com**
Germany	Bär - Elektromaschinen	Hafenstraße 53 39340 Haldensleben	Phone Fax	+49 (390) 4462589	info@baer-ema.de www.baer-ema.de



Europe



Germany	Beck Elektrotechnik	Nürnberger Str. 109 97076 Würzburg	Phone Fax	+49 (931) 20050 +49 (931) 2005200	info@beck-elektrotechnik.de www.beck-elektrotechnik.de
Germany	Boss - Steinlen Elektromaschinen + Pumpentechnik GmbH	Planetenfeldstraße 106 44379 Dortmund	Phone Fax	+49 (231) 9820220 +49 (231) 98202241	elektromaschinen@boss-gruppe.de www.boss-gruppe.de
Germany	Bühler & Sell Elektromotoren KG	Sprendlinger Landstr. 180 63069 Offenbach	Phone Fax	+49 (69) 423076 +49 (69) 423078	info@buehler-sell.de www.buehler-sell.de
Germany	Elektromaschinenbau Dipl.-Ing. Kögel & Ernst & Co. GmbH	Am Markbach 2 76547 Sinzheim	Phone Fax	+49 (7221) 50950 +49 (7221) 509527	info@koegel-ernst.de www.koegel-ernst.de
Germany	Elektrowerk Nordhausen Dipl.-Ing. G. Francke Elektromaschinenbau	An der Helme 14 99734 Nordhausen	Phone Fax	+49 (3631)47950 +49 (3631)479520	info@elektrowerk-nordhausen.de www.elektrowerk-nordhausen.de
Germany	EMS Elektromotoren GmbH	Gewerbegebiet Egelsee 15 93354 Siegenburg	Phone Fax	+49 (9444) 9760 +49 (9444) 976177	bauergear@ems-elektromotoren.de www.ems-elektromotoren.de
Germany	Fuchs Elektromaschinen-bau und Vertriebs GmbH	Kaiserstr. 4d 66133 Saarbrücken-Scheidt	Phone Fax	+49 (681) 98821690 +49 (681) 98821699	fuch@fuchs-sb.de www.elektromaschinenbau-fuchs.de
Germany	Greif GmbH Elektrotechnik	Mushardstraße 11 27570 Bremerhaven	Phone Fax	+49 (471) 31997 +49 (471) 303694	info@greif-elektrotechnik.de www.greif-elektrotechnik.de
Germany	Klebs & Hartmann GmbH & Co. KG	August-Heller-Str. 3 67065 Ludwigshafen	Phone Fax	+49 (621) 579000 +49 (621) 5790024	e-technik@klebs-hartmann.de www.klebs-hartmann.de
Germany	Wilhelm Kleeberg GmbH & Co.KG E-Motoren E-Werkzeuge	Graf-Zeppelin-Straße 5 24941 Flensburg	Phone Fax	+49 (461) 43054110 +49 (461) 43054114	info@kleeberg-fl.de www.kleeberg-fl.de
Germany	Mangold Elektro-maschinenbau GmbH	Lindauer Str. 116 88046 Friedrichshafen	Phone Fax	+49 (7541) 500622 +49 (7541) 500630	info@mangold-fn.de www.mangold-fn.de
Germany	Hans Mayer Elektro-technik GmbH	Simonshofer Str. 41 91207 Lauf a. d. Pegnitz	Phone Fax	+49 (912) 32041 +49 (912) 382661	info@hans-mayer-elektrotechnik.de www.hans-mayer-elektrotechnik.de
Germany	MoFra GmbH	Ringstr. 18 01468 Boxdorf	Phone Fax	+49 (351) 207680 +49 (351) 2076829	info@mofra.de www.mofra.de
Germany	Polzin Elektro-maschinenbau	Kunzestr. 20 04249 Leipzig	Phone Fax	+49(341)4250107 +49(341)4250108	info@polzin-elektromaschinenbau.de www.polzin-elektromaschinenbau.de
Germany	Rülke GbR Jens und Uwe Rülke	Auestr. 36 08371 Glauchau	Phone Fax	+49 (3763) 5089 0 +49 (3763) 5089 29	info@ruelke-glauchau.de www.ruelke-glauchau.de
Germany	Sroczynski GmbH	Pferdestr. 24 48084 Osnabrück	Phone Fax	+49 (541) 588443 +49 (541) 588609	info@sroczynski.de www.sroczynski.de
Germany	Steinlen Elektro-maschinenbau GmbH	Ehlbeek 21 30938 Burgwedel	Phone Fax	+49 (5139) 80700 +49 (5139) 807060	info@steinlen.de www.steinlen.de
Germany	Steinlen Elektro-maschinenbau GmbH	Am Schiffbekerberg 18 22111 Hamburg	Phone Fax	+49 (40) 7320307 +49 (40) 7322228	info@steinlen.de www.steinlen.de
Germany	UAS Meßtechnik GmbH	Prof.-Hermann-Staudinger-Straße 4 94234 Viechtach	Phone Fax	+49 (9942) 94860 +49 (9942) 948610	info@uas.de www.uas.de
Germany	Velden GmbH	Frechener Str. 12 50226 Frechen-Habbelrath	Phone Fax	+49 (2234) 967670 +49 (2234) 9676729	info@velden-gmbh.de www.velden-gmbh.de
Greece	Drivetech e.p.e.	Chrysostomou Smyrnis 124 18345 Moschato	Phone Fax	+30 (210) 7233318 +30 (210) 7233357	info@drivetech.gr www.drivetech.gr
Greenland	Eegholm A/S	Grundtvigs allé 165-169 (Main office) Jyllandsgade 30, Hal 2 (Stock) 6400 Sönderborg / Denmark	Phone Fax	+45 (73) 121212 +45 (73) 121213	eegholm@eegholm.dk www.eegholm.dk
Hungary	Schorch Hungary Ltd. Industrial Site	Gyari Street 1 P.O. box 85 3580 Tiszaujvaros	Phone Fax	+36 (49) 440877	info@schorchhungaria.hu www.schorchhungaria.hu
Hungary	BC Ongroelektro. Kft.	Bolyai tér 1. 3702 Kazincbarcika (East Hungary)	Phone Fax	+36 (48) 511186 +36 (48) 712771	oth.tibor@borsodchem.hu
Italy	Bauer Gear Motor Europe GmbH	Viale Veneto 48 35020 Saonara (PD)	Phone Fax	+39 (49) 8792327	customercare.eu@regalrexnord.com www.bauergears.com/it/
Italy	Ma.In s.n.c.	Via Pola, 8 I-10135 Torino	Phone Fax	+39 (11) 34733 25 +39 (11) 39133 56	dibello.e@ma-in.com www.ma-in.com
Latvia	Techvitas SIA	Daugavas street 38-3 2167 Marupe (Riga)	Phone Fax	+371 (22) 325004	info@techvitas.lv www.techvitas.lv



Europe



Lithuania	Techvitas UAB	Dubysos str. 66A 94107 Klaipėda	Phone Fax	+370 (46) 355494	info@techvitas.lt www.techvitas.com
Luxembourg	Regal Beloit Belgium NV c/o Bauer Gear Motor Europe GmbH	Heiveldekens 16 2250 Kontich/Belgium	Phone Fax	+32 (0) 479221587	customercare.eu@regalrexnord.com www.bauergears.com
Macedonia	Indas Industry Assistance d.o.o.	Heroja Pinkija 95 21000 Novi Sad / Serbia and Montenegro	Phone Fax	+381 (21) 4804800 +381 (21) 4804808	office@indas.rs www.indas.rs
Netherlands	Regal Beloit Belgium NV c/o Bauer Gear Motor Europe GmbH	Heiveldekens 16 2250 KONTICH/Belgium	Phone Fax	+32 (0) 479221587	customercare.eu@regalrexnord.com www.bauergears.com
Netherlands	Facta Friesland BV	De Alde Mar 11 9035 VP Dronryp	Phone Fax	+31 (0)517 231232	friesland@facta.nl www.facta.nl
Netherlands	De Bruyn B.V.	Van Konijnenburgweg 105 4612 PL Bergen op Zoom	Phone Fax	+31 (164) 234302 +31 (164) 255140	repair@de-bruyn.nl www.de-bruyn.nl
Netherlands	Facta Spijkenisse	Röntgenweg 6 3208 KG Spijkenisse	Phone Fax	+31 (0)88 6000 300	spijkenisse@facta.nl www.facta.nl
Netherlands	Facta Zevenhuizen BV	Nijverheidscentrum 36 2761 JP Zevenhuizen	Phone Fax	31 (88) 7384702	zevenhuizen@facta.nl www.facta.nl
Netherlands	Facta Nederweert BV	Pannenweg 208 6031 RK Nederweert	Phone Fax	+31 (495) 634141	nederweert@facta.nl www.facta.nl
Netherlands	Facta Uitgeest BV	Westerwerf 11 1911 JA Uitgeest	Phone Fax	+31 (88) 6000200	uitgeest@facta.nl www.facta.nl
Netherlands	Facta Staphorst BV	Roelof Brinkstraat 3 7951 DW Staphorst	Phone Fax	+31 (88) 7384700	straphorst@facta.nl www.facta.nl
Netherlands	Facta Appingedam BV	Holepolder 1 9902 SM Appingedam	Phone Fax	+31 (88) 7384700	appingendam@facta.nl www.facta.nl
Norway	BAUER Gearmotorer AS	Postboks 221 2021 Skedsmokorset	Phone Fax	+47 (63) 875950	customercare.eu@regalrexnord.com www.bauergear.no
Poland	Steinlen Polska Sp. z o.o.	ul. W. Grabskiego 4/8 63-500 Ostrzeszów	Phone Fax	+48 (62) 7322352 +48 (62) 7322351	biuro@steinlenpolska.pl www.steinlenpolska.pl
Portugal	TEM S.L. Bauer Gear Center Transmisiones Electromecánicas, S.L	Pol. Industrial Les Comes Calle Italia 11 Nave 9 08700 Igualada (Barcelona) / Spain	Phone Fax	+34 (93) 8056021 +34 (93) 8056022	info@tem-sl.com www.tem-sl.com
Romania	BIBUS SES srl	Calea Lugojului 134/1 307200 Ghiroda, Timis	Phone Fax	+40 (256) 200500	office@bibus.ro www.bibus.ro
Serbia and Montenegro	Indas Industry Assistance d.o.o.	Heroja Pinkija 95 21000 Novi Sad	Phone Fax	+381 (21) 4804800 +381 (21) 4804808	office@indas.rs www.indas.rs
Slovakia	Bauer Gear Motor Slovakia	Továrenská 49 953 36 Zlaté Moravce	Phone Fax	+421 (37) 6926158 +421 (37) 6926181	customercare.eu@regalrexnord.com www.bauergears.com
Slovakia	Transmisie Engineering a.s.	P. Mudrona 10 036 01 Martin	Phone Fax	+421 (43) 4133157	dps@transmisie.sk www.transmisie.sk
Slovenia	TALER ING d.o.o.	Jelovška cesta 43A 4264 Bohinjska Bistrica	Phone Fax	+386 (4) 5747128 +386 (4) 5747129	info@taler-ing.si www.taler-ing.si
Spain	TEM S.L. Bauer Gear Center Transmisiones Electromecánicas, S.L	Pol. Industrial Les Comes Calle Italia 11 Nave 9 08700 Igualada (Barcelona) / Spain	Phone Fax	+34 (93) 8056021 +34 (93) 8056022	info@tem-sl.com www.tem-sl.com
Sweden	BAUER Gearmotorer Sverige AB	Årjängsvägen 4 66693 Gustavsfors	Phone Fax	+46 (531) 20050 +46 (531) 20040	postmaster@bauergear.net
Switzerland	Küffer Elektro-Technik AG	Industrie Neuhof 31 3422 Kirchberg	Phone Fax	+41 (34) 4452626	info@ketag.ch www.ketag.ch
Switzerland	Electro-Müller AG	Industriestr. 25 2555 Brügg	Phone Fax	+41 (32) 3441010 +41 (32) 3441019	info@electro-mueller.ch www.electro-mueller.ch
United Kingdom	Bauer Gear Motor Limited	Unit1 Nat Lane Business Park CW7 3BS Winsford	Phone Fax	+44 (1606) 868600 +44 (1606) 868603	customercare.eu@regalrexnord.com www.bauergears.com
Armenia	Bauer Gear Motor GmbH	Eberhard-Bauer-Str. 37 73734 Esslingen / Germany	Phone Fax	+49 (711) 3518 0 +49 (711) 3518 381	customercare.eu@regalrexnord.com www.bauergears.com
Azerbaijan	Bauer Gear Motor GmbH	Eberhard-Bauer-Str. 37 73734 Esslingen / Germany	Phone Fax	+49 (711) 3518 0 +49 (711) 3518 381	customercare.eu@regalrexnord.com www.bauergears.com



Europe



Georgia	Bauer Gear Motor GmbH	Eberhard-Bauer-Str. 37 73734 Esslingen / Germany	Phone Fax	+49 (711) 3518 0 +49 (711) 3518 381	customercare.eu@regalrexnord.com www.bauergears.com
Kazakhstan	Silumin-Vostok	Revolucionnaya st., 10 070010 Ust-Kamenogorsk	Phone Fax	+7 (7232) 558982 +7 (7232) 552058	info@silumin.kz
Ukraine	LLC Industrial Mechanics	Michurina str. 4 Dnepr	Phone Fax	+38 (099) 1194979	director@ind-mech.com www.ind-mech.com



Eastern Europe



Eastern Europe					
Armenia	Bauer Gear Motor GmbH	Eberhard-Bauer-Str. 37 73734 Esslingen / Germany	Phone Fax	+49 (711) 3518 0 +49 (711) 3518 381	customercare.eu@regalrexnord.com www.bauergears.com
Azerbaijan	Bauer Gear Motor GmbH	Eberhard-Bauer-Str. 37 73734 Esslingen / Germany	Phone Fax	+49 (711) 3518 0 +49 (711) 3518 381	customercare.eu@regalrexnord.com www.bauergears.com
Georgia	Bauer Gear Motor GmbH	Eberhard-Bauer-Str. 37 73734 Esslingen / Germany	Phone Fax	+49 (711) 3518 0 +49 (711) 3518 381	customercare.eu@regalrexnord.com www.bauergears.com
Kazakhstan	Silumin-Vostok	Revolucionnaya st., 10 070010 Ust-Kamenogorsk	Phone Fax	+7 (7232) 558982 +7 (7232) 552058	info@silumin.kz
Ukraine	LLC Industrial Mechanics	Michurina str. 4 Dnepr	Phone Fax	+38 (099) 1194979	director@ind-mech.com www.ind-mech.com



Middle East & Africa



Middle East & Africa

Bahrain	DRIVELINE GENERAL TRADING LLC	SHEIKH ZAYED RD, 602 AL MOOSA TOWER 1 392670 Dubai / United Arab Emirates	Phone Fax	+971 (04) 379 9901 +971 (04) 3799920	sales@drivelinegroup.com www.drivelinegroup.com
Bahrain	KUHNEZUG AG	C-1401, 14th Floor Ontario Tower Business Bay Dubai / United Arab Emirates	Phone Fax	+971 (4) 5722117 +971 (4) 2567 125	info@kuhnezugag.com www.kuhnezugag.ae
Botswana	Bearings International Pty (Ltd)	Lancaster Commercial Park, 12 Merlin Rose & Lancaster Ivy Drives, Parkhaven, Boksburg, 1459, South Africa	Phone Fax	+27 (11) 899 0000	info@bearings.co.za www.bearings.co.za
Ethiopia	DRIVELINE GENERAL TRADING LLC	SHEIKH ZAYED RD, 602 AL MOOSA TOWER 1 392670 Dubai / United Arab Emirates	Phone Fax	+971 (04) 379 9901 +971 (04) 3799920	sales@drivelinegroup.com www.drivelinegroup.com
Ethiopia	KUHNEZUG AG	C-1401, 14th Floor Ontario Tower Business Bay Dubai / United Arab Emirates	Phone Fax	+971 (4) 5722117 +971 (4) 2567 125	info@kuhnezugag.com www.kuhnezugag.ae
India	Bauer Gear Motor GmbH	Eberhard-Bauer-Str. 37 73734 Esslingen / Germany	Phone Fax	+49 (711) 3518 0 +49 (711) 3518 381	customercare.eu@regalrexnord.com www.bauergears.com
India	International Combustion (India) Ltd.	Infinity Benchmark, 11th Floor, Plot – G1, Block – EP & GP, Salt Lake Electronics Complex, 700 091 Kolkata	Phone Fax	+91 (33) 33153000 +91 (33) 23576653	info@internationalcombustion.in
Israel	Greenshpon Engineering Works Ltd.	Bar-Lev Industrial Park 20179 Misgav	Phone Fax	+972 (4)9913181 +972 (4)9913477	info@greenshpon-eng.com www.greenshpon-eng.com
Jordan	DRIVELINE GENERAL TRADING LLC	SHEIKH ZAYED RD, 602 AL MOOSA TOWER 1 392670 Dubai / United Arab Emirates	Phone Fax	+971 (04) 379 9901 +971 (04) 3799920	sales@drivelinegroup.com www.drivelinegroup.com
Jordan	KUHNEZUG AG	C-1401, 14th Floor Ontario Tower Business Bay Dubai / United Arab Emirates	Phone Fax	+971 (4) 5722117 +971 (4) 2567 125	info@kuhnezugag.com www.kuhnezugag.ae
Kuwait	DRIVELINE GENERAL TRADING LLC	SHEIKH ZAYED RD, 602 AL MOOSA TOWER 1 392670 Dubai / United Arab Emirates	Phone Fax	+971 (04) 379 9901 +971 (04) 3799920	sales@drivelinegroup.com www.drivelinegroup.com
Kuwait	KUHNEZUG AG	C-1401, 14th Floor Ontario Tower Business Bay Dubai / United Arab Emirates	Phone Fax	+971 (4) 5722117 +971 (4) 2567 125	info@kuhnezugag.com www.kuhnezugag.ae
Mozambique	Bearings International Pty (Ltd)	Lancaster Commercial Park, 12 Merlin Rose & Lancaster Ivy Drives, Parkhaven, Boksburg, 1459, South Africa	Phone Fax	+27 (11) 899 0000	info@bearings.co.za www.bearings.co.za
Namibia	Bearings International Pty (Ltd)	Lancaster Commercial Park, 12 Merlin Rose & Lancaster Ivy Drives, Parkhaven, Boksburg, 1459, South Africa	Phone Fax	+27 (11) 899 0000	info@bearings.co.za www.bearings.co.za
Oman	DRIVELINE GENERAL TRADING LLC	SHEIKH ZAYED RD, 602 AL MOOSA TOWER 1 392670 Dubai / United Arab Emirates	Phone Fax	+971 (04) 379 9901 +971 (04) 3799920	sales@drivelinegroup.com www.drivelinegroup.com
Oman	KUHNEZUG AG	C-1401, 14th Floor Ontario Tower Business Bay Dubai / United Arab Emirates	Phone Fax	+971 (4) 5722117 +971 (4) 2567 125	info@kuhnezugag.com www.kuhnezugag.ae
Qatar	DRIVELINE GENERAL TRADING LLC	SHEIKH ZAYED RD, 602 AL MOOSA TOWER 1 392670 Dubai / United Arab Emirates	Phone Fax	+971 (04) 379 9901 +971 (04) 3799920	sales@drivelinegroup.com www.drivelinegroup.com
Qatar	KUHNEZUG AG	C-1401, 14th Floor Ontario Tower Business Bay Dubai / United Arab Emirates	Phone Fax	+971 (4) 5722117 +971 (4) 2567 125	info@kuhnezugag.com www.kuhnezugag.ae
Saudi Arabia	DRIVELINE GENERAL TRADING LLC	SHEIKH ZAYED RD, 602 AL MOOSA TOWER 1 392670 Dubai / United Arab Emirates	Phone Fax	+971 (04) 379 9901 +971 (04) 3799920	sales@drivelinegroup.com www.drivelinegroup.com
Saudi Arabia	KUHNEZUG AG	C-1401, 14th Floor Ontario Tower Business Bay Dubai / United Arab Emirates	Phone Fax	+971 (4) 5722117 +971 (4) 2567 125	info@kuhnezugag.com www.kuhnezugag.ae
South Africa	Bearings International Pty (Ltd)	Lancaster Commercial Park, 12 Merlin Rose & Lancaster Ivy Drives, Parkhaven, Boksburg, 1459	Phone Fax	+27 (11) 899 0000	info@bearings.co.za www.bearings.co.za
Swaziland	Bearings International Pty (Ltd)	Lancaster Commercial Park, 12 Merlin Rose & Lancaster Ivy Drives, Parkhaven, Boksburg, 1459, South Africa	Phone Fax	+27 (11) 899 0000	info@bearings.co.za www.bearings.co.za
Syrian	DRIVELINE GENERAL TRADING LLC	SHEIKH ZAYED RD, 602 AL MOOSA TOWER 1 392670 Dubai / United Arab Emirates	Phone Fax	+971 (04) 379 9901 +971 (04) 3799920	sales@drivelinegroup.com www.drivelinegroup.com
Syrian	KUHNEZUG AG	C-1401, 14th Floor Ontario Tower Business Bay Dubai / United Arab Emirates	Phone Fax	+971 (4) 5722117 +971 (4) 2567 125	info@kuhnezugag.com www.kuhnezugag.ae
Turkey	CEFIP - Makina & Endüstriyel Ürünler San. ve Dis Tic. Ltd. Sti.	Perpa Ticaret Merkezi A Blok Kat: 2 No: 9-0033 34384 Okmeydani - Istanbul	Phone Fax	+90 (212) 2101890 +90 (212) 2101597	cefip@cefip.com.tr www.cefip.com.tr
Turkey	CEFIP- Consulting & Engineering für Industrie-Produkte GmbH	Heidstraße 80 44649 Herne / Germany	Phone Fax	+49 (2325) 972580 +49 (2325) 9725825	contact@cefip.de www.cefip.de



Middle East & Africa



United Arab Emirates	DRIVELINE GENERAL TRADING LLC	SHEIKH ZAYED RD, 602 AL MOOSA TOWER 1 392670 Dubai	Phone Fax	+971 (04) 379 9901 +971 (04) 3799920	sales@drivelinegroup.com www.drivelinegroup.com
United Arab Emirates	KUHNEZUG AG	C-1401, 14th Floor Ontario Tower Business Bay Dubai	Phone Fax	+971 (4) 5722117 +971 (4) 2567 125	info@kuhnezugag.com www.kuhnezugag.ae
Yemen	DRIVELINE GENERAL TRADING LLC	SHEIKH ZAYED RD, 602 AL MOOSA TOWER 1 392670 Dubai / United Arab Emirates	Phone Fax	+971 (04) 379 9901 +971 (04) 3799920	sales@drivelinegroup.com www.drivelinegroup.com
Yemen	KUHNEZUG AG	C-1401, 14th Floor Ontario Tower Business Bay Dubai / United Arab Emirates	Phone Fax	+971 (4) 5722117 +971 (4) 2567 125	info@kuhnezugag.com www.kuhnezugag.ae
Zimbabwe	Bearings International Pty (Ltd)	Lancaster Commercial Park, 12 Merlin Rose & Lancaster Ivy Drives, Parkhaven, Boksburg, 1459, South Africa	Phone Fax	+27 (11) 899 0000	info@bearings.co.za www.bearings.co.za



APAC



APAC					
Australia	Altra Industrial Motion Pty Ltd	Unit 1, 11 Penny Place Arndell Park 2148 NSW (Sydney)	Phone Fax	+61 (2) 9622 1333	sales-australia@altramotion.com www.altramotion.com
Indonesia	PT. Indoaustra Utama	Sentrakota Blok F 17-18 17412 Jatibening, Bekasi	Phone Fax	+62 (21)85517550	info@indoaustra-utama.com
Japan	Leybold Co., Ltd.	5th Floor, Tokyo Tatemono Bldg 1-9-9, Yaesu 1-Chome, Chuo-Ku 103-0028 Tokyo	Phone Fax	+81 (3) 32721861 +81 (3) 32814490	r-karasu@leybold-kk.com
Korea, Republic Of	Chemiko Trading Co. Ltd.	43,Teheran-ro 38-gil, Gangnam-gu 06222 Seoul	Phone Fax	+82 (2) 5675336 +82 (2) 5541284	chemiko@chemiko.net www.chemiko.net
Malaysia	Empower Drives and Automation Sdn Bhd	Lot 7792 Kg Baru Subang Seksyen U9 40150 Shah Alam 40150 Kuala Lumpur	Phone Fax	+60 (3) 7846 9196 +60 (0)3 7846 9180	choong@empowercorp.com.my www.empowercorp.com.my
Malaysia	Empower Drives and Automation Sdn Bhd	Lot 7792 Kg Baru Subang Seksyen U9 40150 Shah Alam 40150 Kuala Lumpur	Phone Fax	+60 (3) 7846 9196 +60 (0)3 7846 9180	choong@empowercorp.com.my www.empowercorp.com.my
Pakistan	MATCO Pvt. Ltd.	203 Second Floor, 18-D Mushtaq Mansion A.K.M Fazal-ul-Haq Road, Blue Area Islamabad	Phone Fax	+92 (51)2874941 3 +92 (51) 2874940	munem.jamil@matcopk.com www.matcopk.com
Philippines	Optima Equipment Corporation	G/F OPTIMA Building, 883 J. Aguilar Avenue 1740 Baranggay Pamplona Tres, Las Pinas City	Phone Fax	+63 (2) 86601230 +63 (2) 8695100	vandel@optima-equipment.com
Singapore	AVM Diesel (F.E.) Pte Ltd Gear Centre Southeast Asia	BLK 27 TUAS AVE 13 #01-23 638993 Singapore	Phone Fax	+65 (6) 8636933 +65 (6) 8636900	sales@avmdiesel.com www.avmdiesel.com
Taiwan	Saturn Power Ltd.	28F, No.27-3, Sec.2 Chung Cheng E. Rd. Danshui District 25170 New Taipei City	Phone Fax	+886 (2) 8809 8186 +886 (2) 8809 8187	sales@saturnpowerltd.com www.saturnpowerltd.com
Thailand	Kasetphand Industry Co.,LTD	100 M. 3 SOI Suksawad 76 Suksawad rd. Bangjark, Phrapradaeng 10130 Samutprakarn	Phone Fax	+66 (2) 8176410 +66 (2) 8176437	jaruwat@ksp.co.th www.ksp.co.th
Thailand	SCM Seng Charoen Muang Co. Ltd.	12/349 Moo 15 Bang Kaeo, Bang Phli District 10540 Samut Prakan	Phone Fax	+66-2-3168200-6 +66-2-3168207	hui@sengscm.com www.sengscm.com
Vietnam	GNN CO., LTD.	33 Hoa hong 2, W. 2 Phu Nhuan District	Phone Fax	+84 (8) 35174923 +84 (8) 35174924	contact@gnnvietnam.com www.gnnvietnam.com



China



China					
China	Altra Industrial Motion (ShenZhen) Co., Ltd.	Suite 301,#5 Lihpao Plaza 88 Shenbin Road Minhang District 201106 Shanghai	Phone Fax	+86 (21) 5169 9255 +86 (21) 6248 5387	aims.sales@regalrexnord.com www.bauergears.com/zh-CN
Hong Kong	A-CALL Company	Flat 8A, 8th Floor Wing Cheong Industrial Building 109 How Ming Street Kwun Tong Kowloon	Phone Fax	+852 (27) 930250 +852 (27) 930620	kent@a-call.com.hk www.a-call.com.hk

Mounting Positions

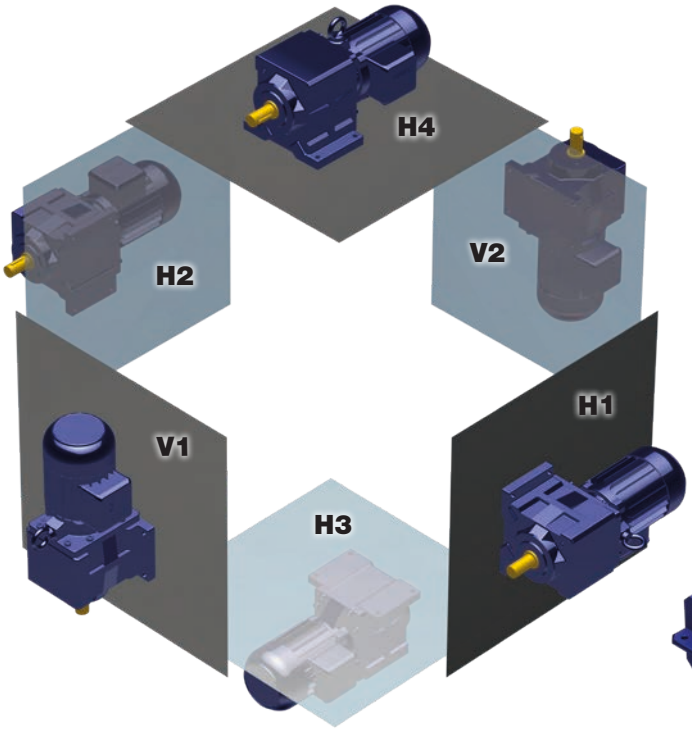

Helical Geared Motors

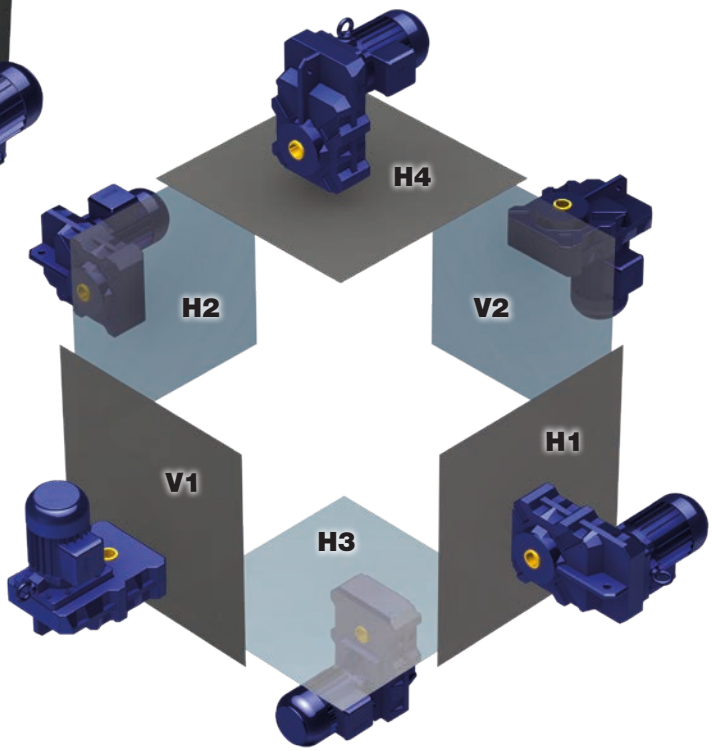

Parallel Shaft Geared Motors

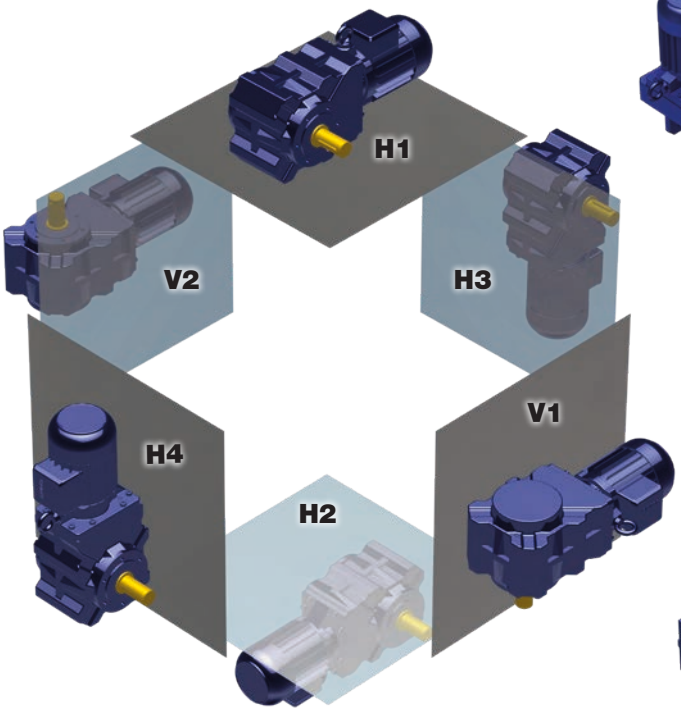

Bevel Geared Motors

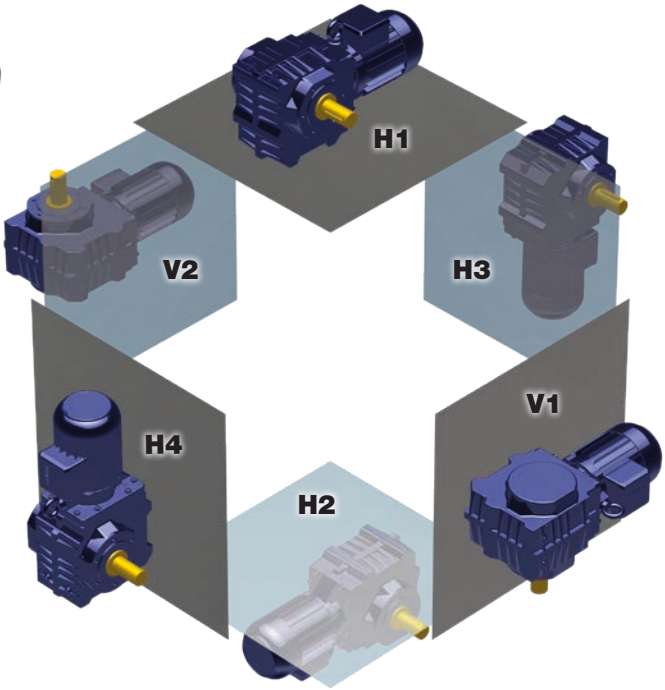

Worm Geared Motors

BAUER GEAR MOTOR™

Regal Rexnord

regalrexnord.com bauergears.com

Germany
Eberhard-Bauer-Str. 37
73734 Esslingen - GERMANY
+49 711 3518 0

North America
701 Carrier Drive
Charlotte, NC 28216 - USA
+1 800-387-0130

Slovakia
Továrenská 49
53 01 Zlaté Moravce - SLOVAKIA
+421 37 6926100

China
18 Huanzhen Road,
Dabo Industry Zone, Shajing Town - Baoan District,
Shenzhen City, Guangdong Province - CHINA
+86 400 886 0365

The proper selection and application of products and components, including assuring that the product is safe for its intended use, are the responsibility of the customer. To view our Application Considerations, please visit https://www.regalrexnord.com/Application-Considerations.

To view our Standard Terms and Conditions of Sale, please visit https://www.regalrexnord.com/Terms-and-Conditions-of-Sale.

"Regal Rexnord" is not indicative of legal entity. Refer to product purchase documentation for the applicable legal entity.

Regal Rexnord and Bauer Gear Motor GmbH are trademarks of Regal Rexnord Corporation or one of its affiliated companies.

© 2024 Regal Rexnord Corporation, All Rights Reserved.

MCC-P-7112-BGM-EN-A4 08/24

RegalRexnord™