Modular “Building Block” Clutches

RIZ, RINZ..G1G2, G2G7, G5G5

Overrunning, Backstopping Ball Bearing Supported, Centrifugal Throwout (C/T) Sprag Clutches

Models RIZ..G1G2/G2G7, RINZ..G5G5 are centrifugal throw-out sprag type clutches with the inner race rotating. Only the inner race is designed for overrunning.

These are self-contained units designed for overrunning clutch applications. Typically used in creep drives, where the overrunning speed is high, but the drive speed is low, and does not exceed the maximum driving speed specified in the table.

Models RIZ and RINZ are equipped with G type covers featuring a grease pocket and contact-free seal.

When ordered complete, the unit is shipped grease lubricated, ready for either horizontal or vertical installation.

The Model RIZ using grease sealed bearings has almost zero lubrication maintenance requirements. The C/T Sprag feature provides no Sprag contact or wear during overrunning when operated above the Sprag lift-off speed. The typical recommended maintenance is to replace the bearing every three years. The Sprag assembly and race are to be relubricated with grease for corrosion protection at this time. All applications should be reviewed by Formsprag Engineering for complete Maintenance recommendation.

RIZ..G2G7

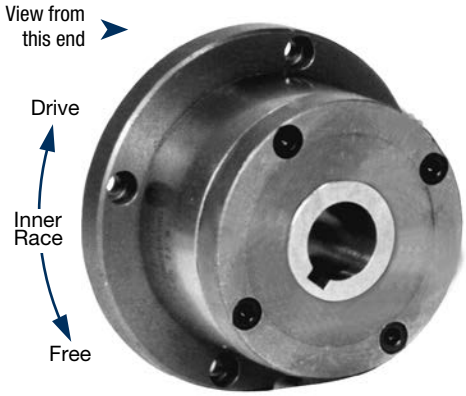

RINZ..G5G5

Right Hand rotation shown.
(Left Hand opposite.)
Specify direction of rotation when ordering.

Specifications

Size	Torque Capacity lb.ft. (Nm)	Overrunning Speed Max. RPM			Lubrication	Shipping Weight lb. (kg)
		Max Drive	Sprag Lift-off	Inner Race Overrunning		
30	276 (375)	350	780	9,000	Grease	8.60 (3.9)
35	406 (550)	320	740	8,500	Grease	10.80 (4.9)
40	590 (800)	315	720	7,500	Grease	16.54 (7.5)
45	673 (912)	285	665	6,600	Grease	17.20 (7.8)
50	1,033 (1400)	265	610	6,000	Grease	23.81 (10.8)
60	1,734 (2350)	200	490	5,300	Grease	37.04 (16.8)
70	2,250 (3050)	210	480	4,100	Grease	45.86 (20.8)
80	3,321 (4500)	190	450	3,600	Grease	59.54 (27)
90	4,132 (5600)	180	420	2,700	Grease	88.20 (40)
100	7,748 (10500)	200	455	2,700	Grease	147.74 (67)
130	11,623 (15750)	180	415	2,400	Grease	207.27 (94)

Note: When ordering, please specify direction of rotation.

RIZ, RINZ..G1G2, G2G7, G5G5

RIZ..G1G2

View from this end

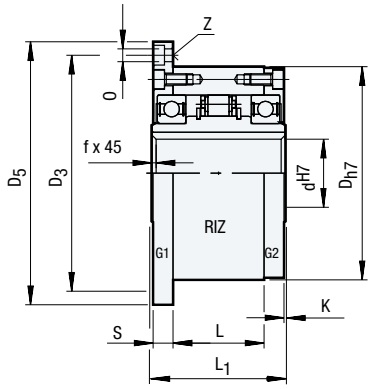

RIZ..G2G7

View from this end

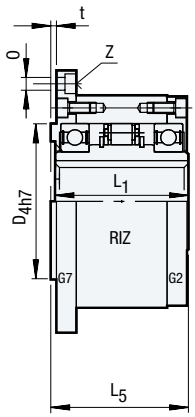

RINZ..G5G5

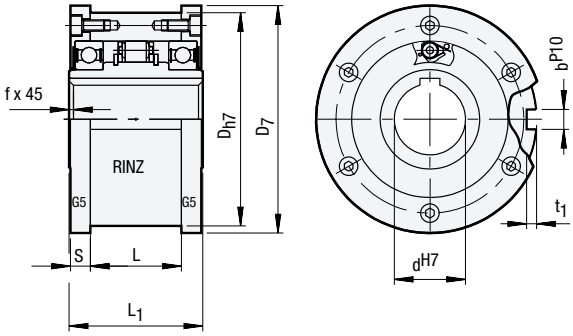

Dimensions inches (mm)

Size	d^{H7}	D_{h7}	D_3	D_{4h7}	D_5	D_7	O	S	L_1	L	L_5	t	t_1	b^{P10}	f
30	1.18 (30)	3.94 (100)	4.49 (114)	2.95 (75)	5.04 (128)	4.29 (109)	0.26 (6.6)	0.45 (11.5)	2.68 (68)	1.69 (43)	2.76 (70)	0.12 (3)	0.16 (4)	0.31 (8)	0.04 (1)
35	1.38 (35)	4.33 (110)	4.88 (124)	3.15 (80)	5.51 (140)	4.69 (119)	0.26 (6.6)	0.53 (13.5)	2.91 (74)	1.77 (45)	2.99 (76)	0.14 (3.5)	0.20 (5)	0.39 (10)	0.04 (1)
40	1.57 (40)	4.92 (125)	5.59 (142)	3.54 (90)	6.30 (160)	5.31 (135)	0.35 (9)	0.61 (15.5)	3.39 (86)	2.09 (53)	3.46 (88)	0.14 (3.5)	0.20 (5)	0.47 (12)	0.06 (1.5)
45	1.77 (45)	5.12 (130)	5.75 (146)	3.74 (95)	6.50 (165)	5.51 (140)	0.35 (9)	0.61 (15.5)	3.39 (86)	2.09 (53)	3.46 (88)	0.14 (3.5)	0.22 (5.5)	0.55 (14)	0.06 (1.5)
50	1.97 (50)	5.91 (150)	6.54 (166)	4.33 (110)	7.28 (185)	6.30 (160)	0.35 (9)	0.55 (14)	3.70 (94)	2.52 (64)	3.78 (96)	0.16 (4)	0.22 (5.5)	0.55 (14)	0.06 (1.5)
60	2.36 (60)	6.69 (170)	7.56 (192)	4.92 (125)	8.43 (214)	7.17 (182)	0.43 (11)	0.67 (17)	4.49 (114)	3.07 (78)	4.57 (116)	0.16 (4)	0.28 (7)	0.71 (18)	0.08 (2)
70	2.76 (70)	7.48 (190)	8.35 (212)	5.51 (140)	9.21 (234)	7.95 (202)	0.43 (11)	0.73 (18.5)	5.28 (134)	3.74 (95)	5.35 (136)	0.16 (4)	0.30 (7.5)	0.79 (20)	0.10 (2.5)
80	3.15 (80)	8.27 (210)	9.13 (232)	6.30 (160)	10.00 (254)	8.74 (222)	0.43 (11)	0.83 (21)	5.67 (144)	3.94 (100)	5.75 (146)	0.16 (4)	0.35 (9)	0.87 (22)	0.10 (2.5)
90	3.54 (90)	9.06 (230)	10.00 (254)	7.09 (180)	10.94 (278)	9.53 (242)	0.55 (14)	0.81 (20.5)	6.22 (158)	4.53 (115)	6.30 (160)	0.18 (4.5)	0.35 (9)	0.98 (25)	0.12 (3)
100	3.94 (100)	10.63 (270)	12.01 (305)	8.27 (210)	13.19 (335)	11.10 (282)	0.71 (18)	1.18 (30)	7.17 (182)	4.72 (120)	7.24 (184)	0.20 (5)	0.39 (10)	1.10 (28)	0.12 (3)
130	5.12 (130)	12.20 (310)	13.58 (345)	9.45 (240)	14.96 (380)	12.68 (322)	0.71 (18)	1.14 (29)	8.35 (212)	5.98 (152)	8.43 (214)	0.20 (5)	0.43 (11)	1.26 (32)	0.12 (3)

Note: For bore and keyseat information see page 103.