RegalRexnord



MONITORING AND CONTROL SYSTEMS

BRAKING SYSTEMS SAFETY







Stromag

PRODUCT CATALOG

Stromag™

DECADES OF EXPERIENCE

Across Industries and Applications



Founded in 1932, Stromag™ has grown to become a globally recognized leader in the development and manufacture of innovative power transmission components for industrial drivetrain applications.

Stromag engineers utilize the latest design technologies and materials to provide creative, energy-efficient solutions that meet their customer's most challenging requirements.

Stromag's extensive product range includes flexible couplings, disc brakes, limit switches, an array of hydraulically, pneumatically, and electrically actuated brakes, and a complete line of electric, hydraulic and pneumatic clutches.

Stromag engineered solutions improve drivetrain performance in a variety of key markets including energy, off-highway, metals, marine, transportation, printing, textiles, and material handling on applications such as wind turbines, conveyor systems, rolling mills, agriculture and construction machinery, municipal vehicles, forklifts, cranes, presses, deck winches, diesel engines, gensets and stage machinery.

VISIT US ON THE WEB AT **STROMAG.COM**

RegalRexnord™

CONTENT

STROMAG™ MONITORING & CONTROL SYSTEMS 4

DIFFERENT TECHNOLOGIES TO MEET CUSTOMER REQUIREMENTS 4

APPLICATION AREAS 5

MORE THAN JUST MONITORING 5

SPEED MONITORING 6

KINEMATIC CHAIN MONITORING 12

AUTOMATIC LOWERING CONTROL 16

SAFETY MANAGEMENT 24

BRAKE MONITORING 25

CONTROL AND MONITORING OF THE H.P.P. 26

EXAMPLES OF INSTALLATIONS REVAMPING 27

BRAKING SYSTEM CONTROL 34

STROMAG™ MONITORING & CONTROL SYSTEMS

DIFFERENT TECHNOLOGIES TO MEET CUSTOMER REQUIREMENTS









- To ensure the safety of the installation braking system, Stromag offers, according to customer's request, different possibilities in terms of:
  - technologies: analog, digital or digital communicating
  - automation levels: from monitoring to predictive maintenance with Ethernet communication.
- If analog technology is selected:
  - CRD™ and CRV™ modules are solutions for speed and deceleration regulation
  - AFR5 enclosures are tailor made to monitor and control the regulated braking with possibility of different braking modes.
- The SIDEOS modules are digital solutions for speed monitoring. Their performance and their configurability have given great success to these modules which equip many lifting installations.
- SioT Stromag system, with its digital commutating technology, is a complete and compact solution from monitoring to predictive maintenance. Its modularity enables a wide range of monitoring and control level with the possibility at any time to upgrade the installation.
- Stromag remains at the entire disposal of its customers to:
  - define the most suitable solution for their braking systems monitoring and/or control
  - start up the installation
  - train the users.

APPLICATION AREAS



- The Stromag™ monitoring systems are designed for industrial applications such as steel, nuclear, construction, marine and offshore, mass transport.
- They meet the increasingly complex needs of applications such as offshore cranes using manual overload protection or soft braking systems.

MORE THAN JUST MONITORING

- The Stromag safety systems transmit and display complete information on the installation state.
- They can also:
  - pilot difficult lowering or regulated braking operations,
  - initiate preventive actions securing the installation in case of failure,
  - allow predictive maintenance by transmission to the IIoT (Cloud Motion Connect) for analysis and cross-checking of the data (state of the brakes, the power supplies and the monitoring systems themselves).

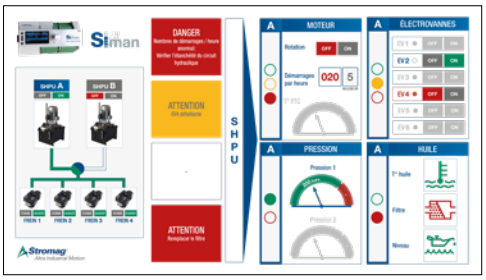

SIoT
INTELLIGENCE FOR YOUR PERFORMANCE

Speed Monitoring

SPEED MONITORING

SIDEOS ONE

Speed Monitoring Module



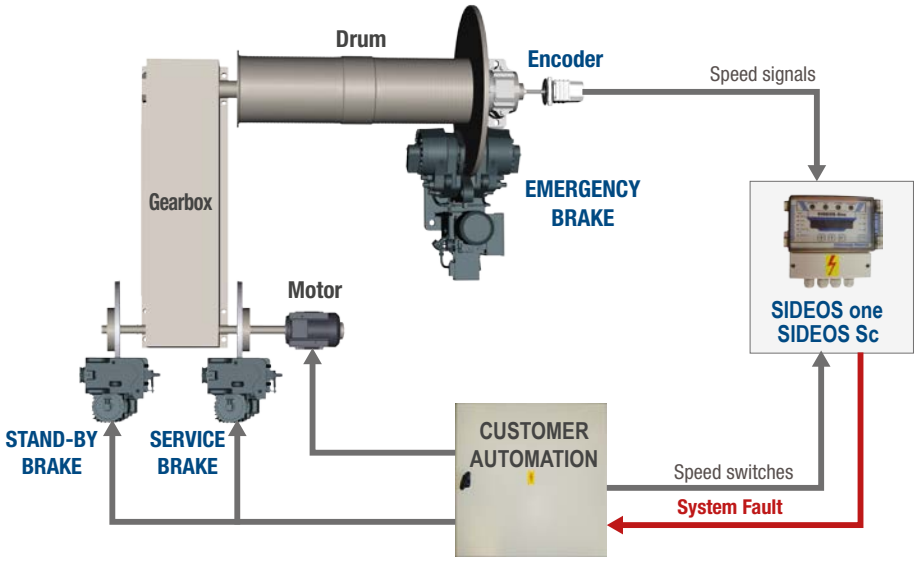

SIDEOS One is designed to monitor:

- 3 speed thresholds
- the shutdown of the installation
- the rotation direction of the installation

It detects:

- Overspeed
- Static and Dynamic Slipping

For safety level up to PLe category 4

SIDEOS SC

Variable Speed Monitoring Module



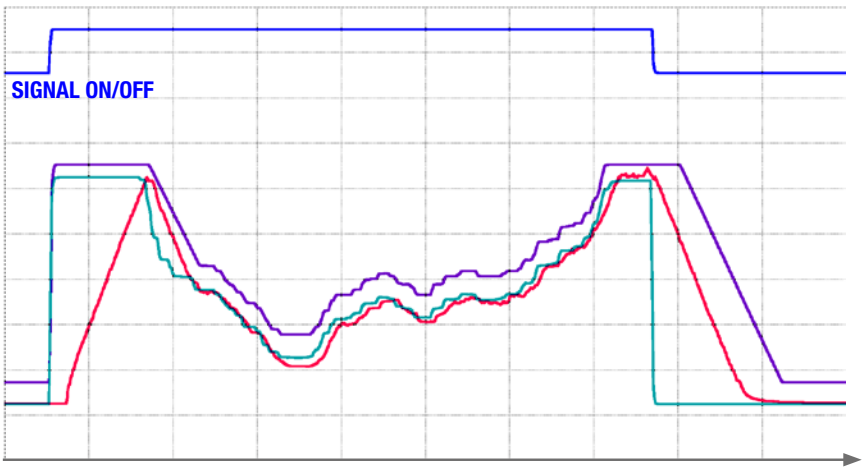

SIDEOS Sc is designed to monitor:

- 1 variable speed threshold
  (speed controlled by joystick)

It detects:

- Overspeed
- Underspeed
- Static and Dynamic Slipping

For safety level up to PLe category 4

SET POINT is given to the variator by the joystick
SPEED THRESHOLD = Variator set point + 10% of the nominal speed
REAL SPEED

Speed Monitoring



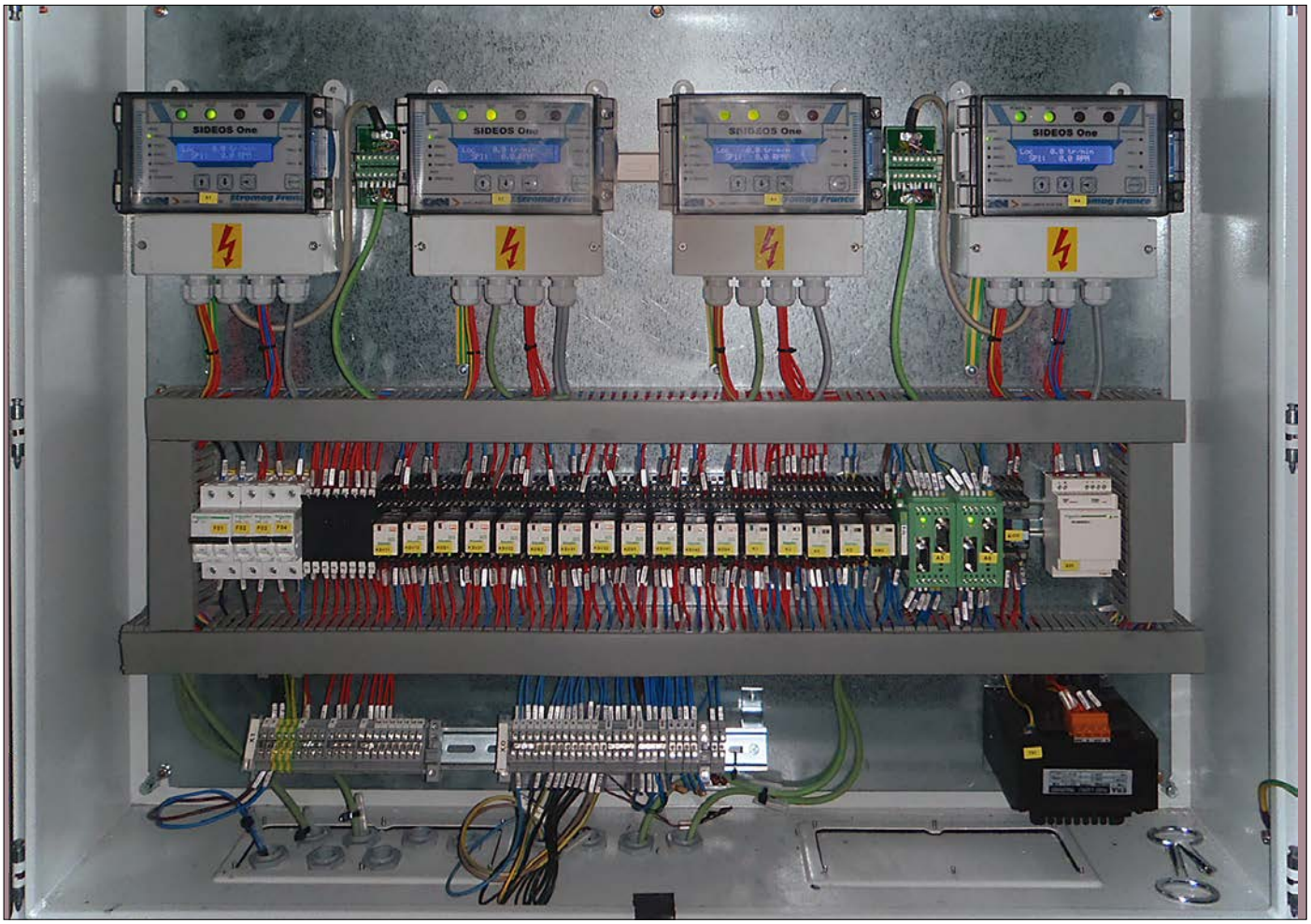

Speed Monitoring

SIDEOS ONE MODULE

Revision number: M10054-01-H Revision date: 02.05.2024

Configurable and secure system for speed monitoring: redundant design and fault detection system (DC>99%) which secure the overall operation of the overspeed detection system.

Conform to the machine security standards :
NF EN ISO 13489-1
Performance level PL=d to PL=e
Category : 2 to 4
$MTTF_D$ = 230.9 years PFH_D = 1460 operations/year

Operating conditions :
- Ambient temperature : -20°C to +60°C
  Attention: Using **SIDEOS One** at temperature > 60°C involves destruction of the internal power supply
- IP65 protected electrical casing

Electrical data :
- 2 versions
  AC : 115/230 VAC ± 10% 50/60Hz or
  DC : 24 VDC ± 15%
- Other voltages : consult us

EC marking of conformity :
- 2006/42/EC directive Machine
- 2014/35/UE Low voltage directive (standard NF EN 60204-1)
- 2014/30/UE EMC directive (standards NF EN 61000-6-2. NF EN 61000-6-4)

Options :
- Steel casing IP66 IK10
- Contact module

The **SIDEOS One** can be installed in a control enclosure on an DIN rail of 35mm, or fixed with M5 screws, see the drawing below.

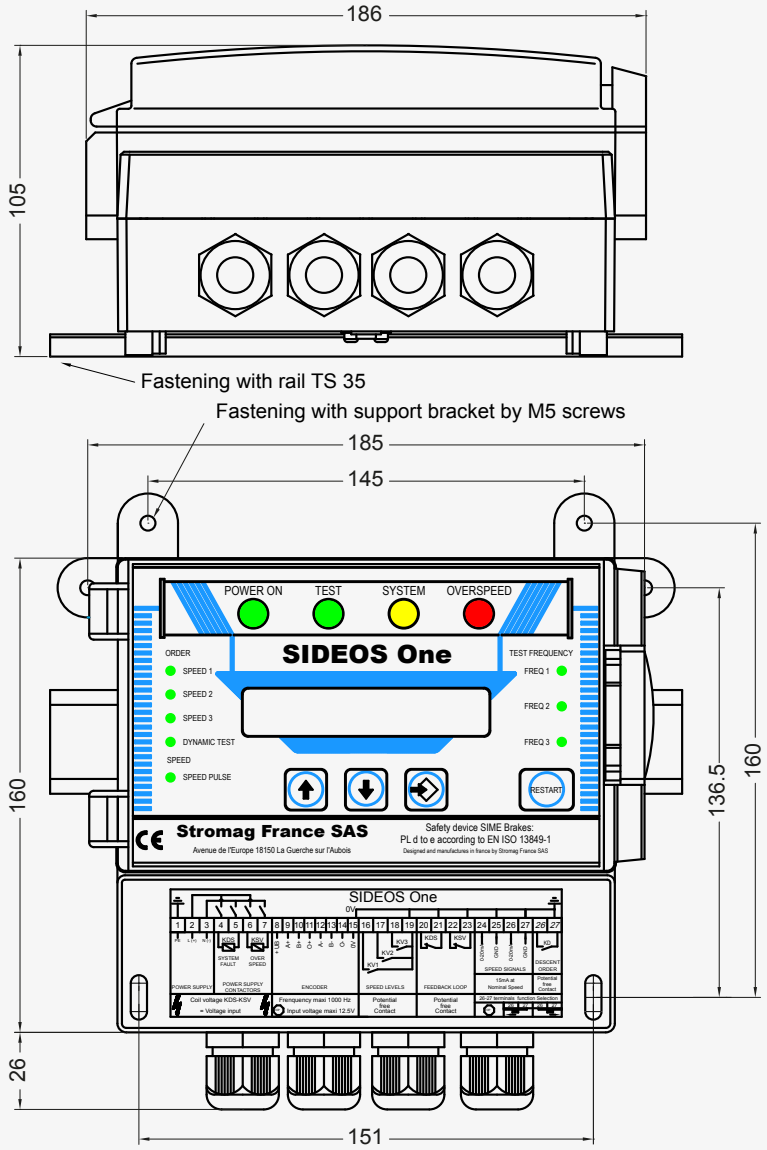

4 cable glands ISO20 cable Ø 6 to 12
In case of heavy vibrations, it is recommended to fasten the **SIDEOS One** on elastic buffers.

SIDEOS ONE MODULE

Revision number: M10054-01-H Revision date: 02.05.2024

The **SIDEOS One** is a configurable system for speed monitoring designed to secure the lifting of a handling equipment.

> **It is set according to**:

- The lifting characteristics	**Parameters**
• Number of encoder pulses per revolution	NC
• Nominal speed of lifting in rpm	NS
• Deceleration time	DT
- The selected functions	
• Speed thresholds to monitor	SP1-SP2-SP3
• Dynamic Slipping	TS
• Break of the kinematic chain	TS and DS
• Encoder monitoring	RC
- The number of pulses to confirm an Overspeed	
• Validation Overspeed 1, Static and Dynamic Slippings	VS1
• Validation Overspeed 2	VS2
• Validation Overspeed 3 and kinematic chain break	VS3



Access to the parameters is protected by a locking mode.

> **It receives:**
- The speed signal(s) of the installation
- The functional orders of the lifting control of the handling equipment

> **It monitors:**	**and detects, in case of wrong operation:**
- the lifting speed(s)	- an Overspeed
- the lifting stop (deceleration) - the lifting stop positioning	- a Static Slipping - a Static Slipping
- the lifting operation direction	- a Dynamic Slipping
- the lifting kinematic chain	- a Differential Speed
- the encoder	- an encoder fault
- the functional orders of the control	- a Speed contact fault
- the output contactors or relays	- a contactor fault

> **When it detects a fault, it cuts:**
- the power to the relevant outpout, System Fault or Overspeed

> **It secures the global operation of the speed monitoring system by means of:**
- its redundant internal and external design and its monitoring system (DC> 99%) which allow the detection of all the internal and external failures.

It allows to obtain
a secured speed monitoring system
Category 2 PL d up to Category 4 PL e
according to the standard NF EN ISO 13849-1.

> **It signals the triggering origin:**
- via the alphanumeric display
- an auxiliary contact of the output contactors

> **It records:**
- The opening of the output contactors or relays and this even in case of power cut
- The 3 last Fault message

> **It releases:**
- the fault when the RESTART button is manually actuated, this action allows the control system to receive a distinct starting order.

Speed Monitoring

SIDEOS ONE MODULE

Revision number: M10054-01-H Revision date: 02.05.2024

Internal design

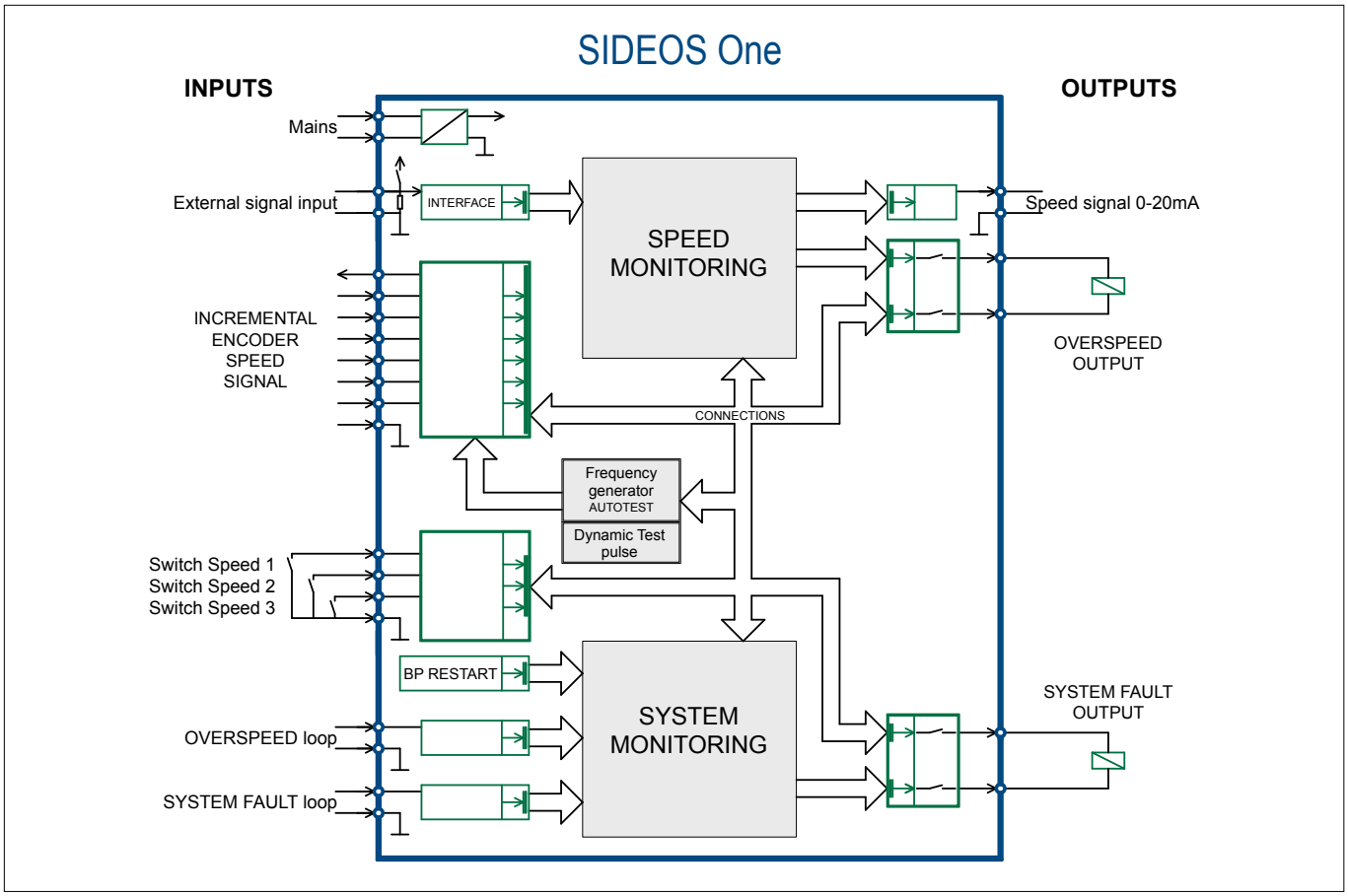

> **External failures**

The monitoring system of the **SIDEOS One** is designed to detect all the external signals failures by means of a redundant or logic treatment of the input signals.

It secures the operation of the speeds inputs, the contacts inputs, the System Fault outputs and the Overspeed outputs (DCavg>99%).

> **Internal failures**

The **SIDEOS One** detects all the internal faults (DCavg>99%), either during the operation, or during the AUTOTEST.
Faults, detected only during the AUTOTEST, do not lead to loss the safety function thanks to the redundant internal design.

It ensures :
- a cross-monitoring of its internal operation
- a dynamic test of the overspeed function every 360 pulses of the encoder
- the control of validity of the memories

> **Cut-off and safe connection of the System Fault and Overspeed outputs supply**

The **SIDEOS One** system, that cuts off the supply of the System Fault and Overspeed outputs, is designed to switch off the output supply whatever the fault present on the output.

> **Autotest**

The AUTOTEST triggers automatically at power on (time 1.5s) or at a manual starting-up (RESTART) following a triggering of a **SIDEOS One** output (time 1s).

The AUTOTEST allows a global checking and ensures the **SIDEOS One** to operate correctly, if the AUTOTEST is validated.

SIDEOS SC MODULE

Revision number: M10164-01-B Revision date: 23.03.2021

For a detailed description of the SIDEOS Sc functionalities, consult the complete technical leaflet on: download.stromagfrance.com

The **SIDEOS Sc** is a configurable system for speed monitoring designed to secure the lifting of a handling equipment.
It compares the speed (encoder) with the speed controller setpoint.
Its dimensions, operating conditions, electrical data and EC marking of conformity are identical to Sideos One.

> **It is set according to**:

- The lifting characteristics	**Parameters**
• Number of encoder pulses per revolution	NC
• Nominal speed of lifting in rpm	NS
• Deceleration time	DT
• Acceleration time	AT
- Parameterization of the monitoring	
• Number of validation pulses of a Static or Dynamic Slipping (2 to 10°)	VS1
• Number of validation pulses of a underspeed / overspeed (10ms to 40ms at NS)	VS2
• Underpeed and overspeed threshold in % of NS (10 to 25%)	DS
• Direction of rotation encoder (Dynamic Slipping)	DRe
- Parameterization of the signal output	
• Type of Signal on the signal output 0-20mA	OS



Access to the parameters is protected by a locking mode.

From:
- Functional commands transmitted to the speed controller
- From the speed setpoint transmitted to the speed controller
- Brake release signal (opening contact or controller control)
- The winch speed from an incremental encoder

> **It monitors:**	**and detects, in case of wrong operation:**
- the lifting speed	- an Underspeed or an Overspeed
- the lifting stop (deceleration)	- a Static Slipping (Deceleration fault)
- the lifting stop positioning	- a Static Slipping (Load slip)
- the lifting operation direction	- a Dynamic Slipping
- the encoder	- an Encoder fault
- the functional orders of the command	- a Speed contact fault
- the output contactors or relays	- a contactor fault

> **When it detects a fault, it cuts:**
- the power to the relevant outpout, System Fault or Overspeed

> **It secures the global operation of the speed monitoring system by means of:**
- its redundant internal and external design and its monitoring system (DC> 99%) which allow the detection of all the internal and external failures.

It allows to obtain
a secured speed monitoring system
Category 3 PL d up to Category 4 PL e
according to the standard NF EN ISO 13849-1.

> **It signals the triggering origin:**
- via the alphanumeric display
- an auxiliary contact of the output contactors

> **It records:**
- The opening of the output contactors or relays and this even in case of power cut
- The 3 last Fault message

> **It releases:**
- the fault when the RESTART button is manually actuated, this action allows the control system to receive a distinct starting order.

KINEMATIC CHAIN MONITORING

SIDEOS V4 — Kinematic Chain Monitoring Module



SIDEOS V4 secures the kinematic chain of the lifting equipment.

It can be used in configurations:
- Drum / Motor
- Drum / Drum

For safety level up to PLe category 4

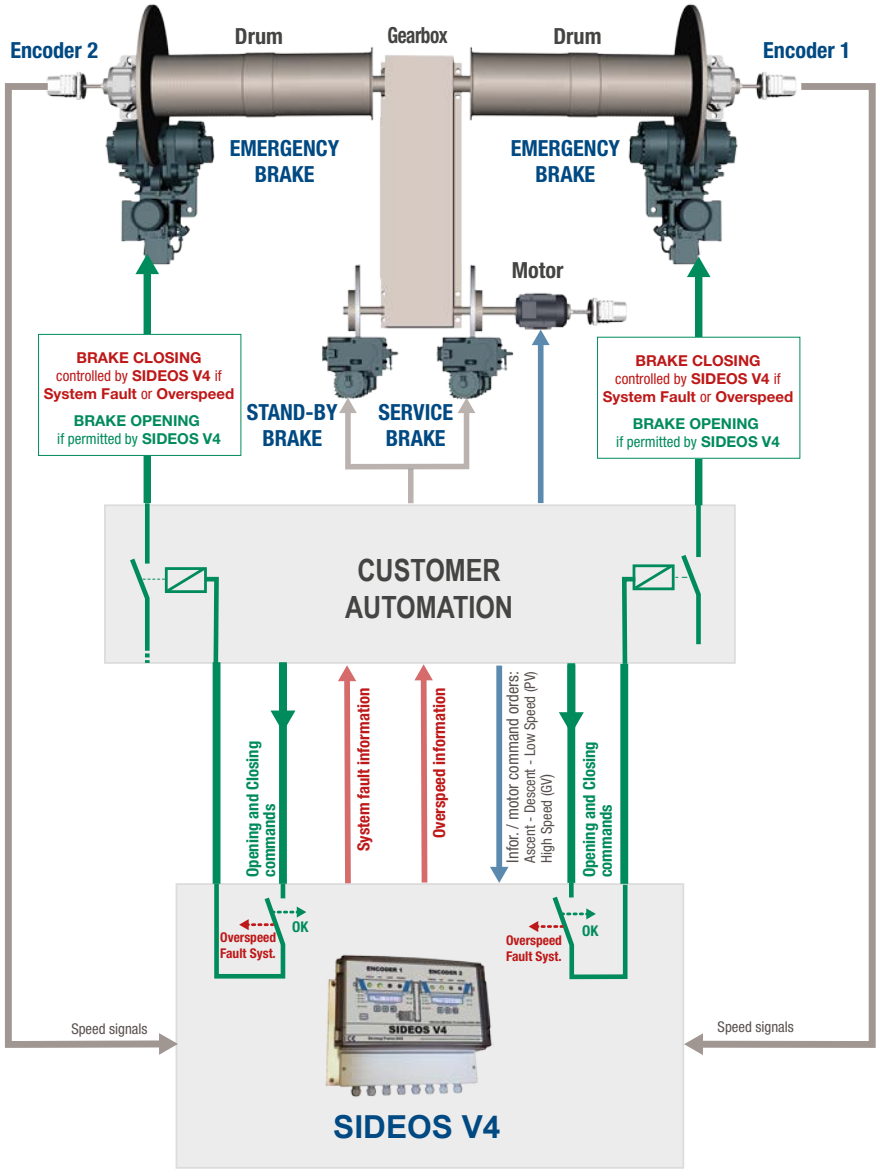

Speed Monitoring Modules

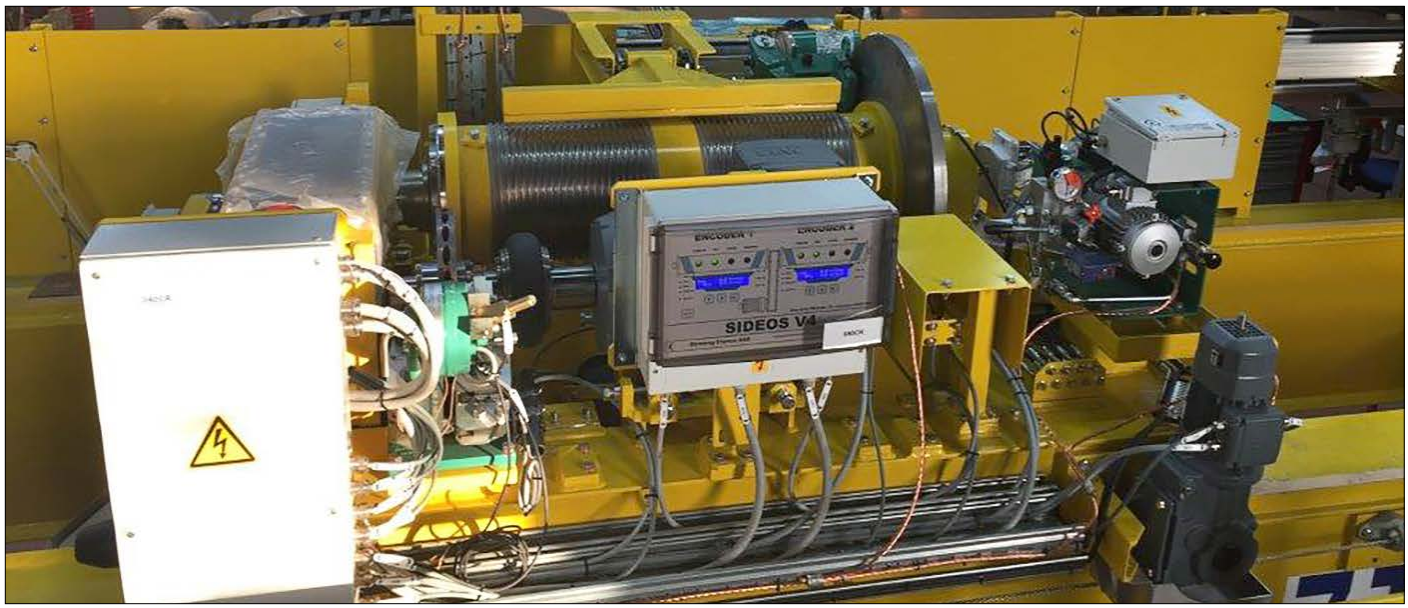

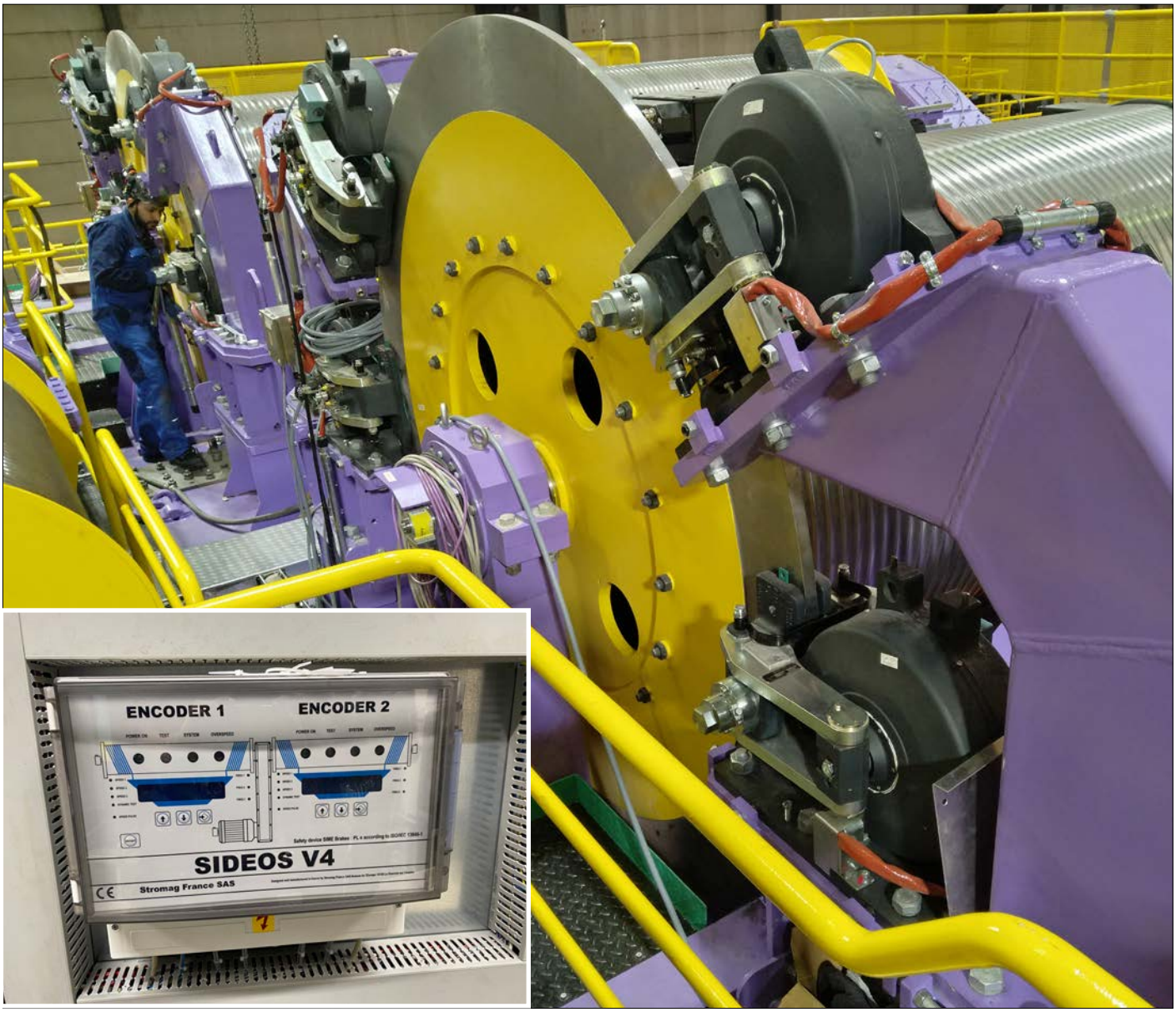

Speed Monitoring

SIDEOS V4 MODULE

Revision number: M10162-01-C Revision date: 12.09.2019

- Configurable Monitoring System of the kinematic chain (SSCC) designed to secure the kinematic chain of a handling equipment (lifting).
- Independent monitoring system of the speed of a handling equipment (lifting).
- It drives the opening of the braking control circuit downstream of the control-command circuits which it depends on.
- It prevents or stops use of the lifting motion of the handling equipment, if it cannot perform its function.

Conform to the machine security standard:
ISO/IEC 13849-1
Category 4 Performance Level PL= e
Designed according to CRT16 60.C.016 EDF

- A single fault in any of its parts does not involve a loss of the safety function.
- A single fault is detected as soon as or before the safety function is next required.
- Faults accumulation is taken into account.
- High average rate before **SIDEOS V4** subsystem failure : MTTFD = 172.4 years.
- Probability of dangerous failure per hour (1/h) of **SIDEOS V4** subsystem: PFHD =1.35 10-8.
- High diagnosis coverage: DCavg ≥99%).
- Failures detection rate of Common Cause CCF ≥ 80%.
- Assignment time TM = 20 years

Operating conditions :
- Ambient temperature : -20°C to +60°C

Electrical data :
- DC : 24 VDC ± 15%
- Other voltages : consult us

EC marking of conformity:
- 2006/42/EC directive Machine
- 2014/35/UE Low voltage directive (standard NF EN 60204-1)
- 2014/30/UE EMC directive (standards NF EN 61000-6-2. NF EN 61000-6-4)

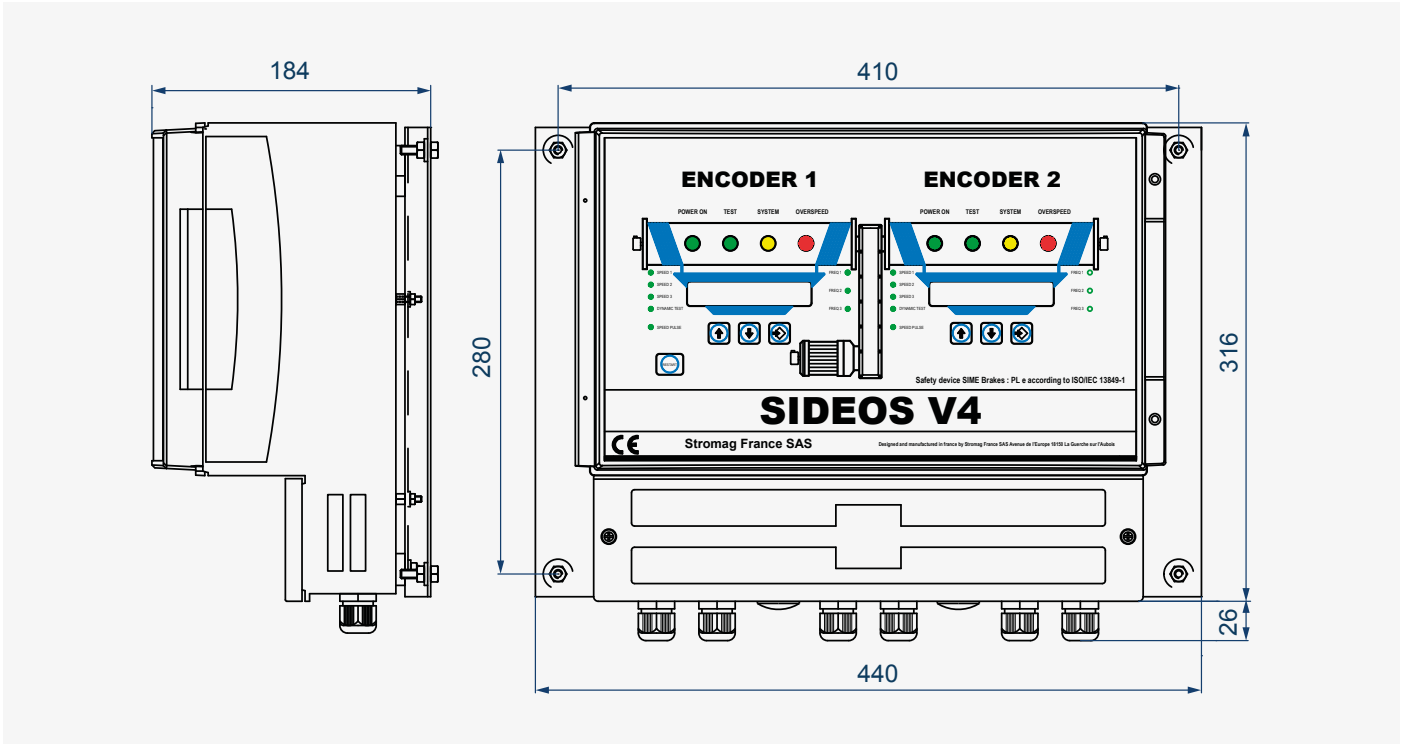

Casing material	Polycarbonate
Cables inputs	6 x cable glands ISO 20 (Ø cable min. = 6 mm / max. = 12 mm) 2 stopping plugs ISO 25
Casing protection rate	Casing IP65
Impact resistance	IK 08/07
Mounting	Screws M6 provided (Screw M6x20 – pin washers – nut M6).
Weight	8 Kg

MOUNTING INFORMATION

> The metal support of the **SIDEOS V4** casing must be connected to the surrounding metal structure.

> Use the provided screws to make the electrical and mechanical connection.
If necessary, use also a ground strap.

SIDEOS V4 MODULE

Revision number: M10162-01-C Revision date: 12.09.2019

For a detailed description of the SIDEOS V4 functionalities, consult the complete technical leaflet on: download.stromagfrance.com

The **SIDEOS V4** unit is a configurable Monitoring System of the kinemetic chain (SSCC) designed to secure the kinematic chain of handling equipment (lifting).
It can be used in the 2 following configurations:

Configuration 1: Drum / Motor

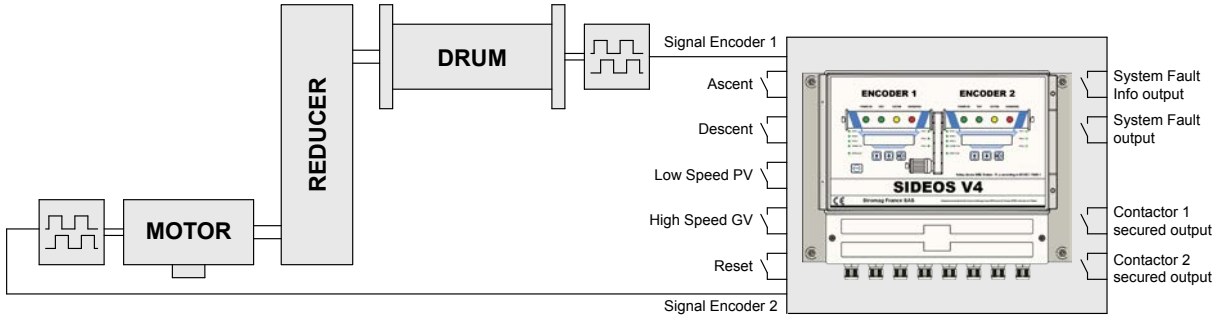

Configuration 2: Drum / Drum

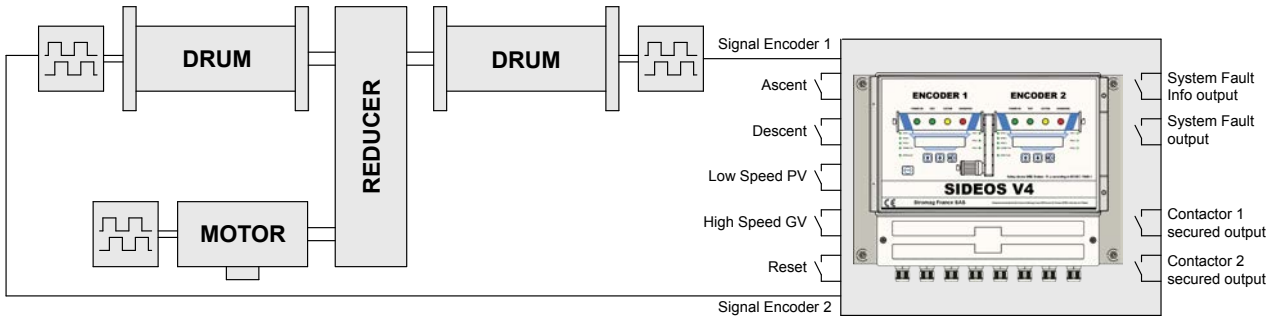

> **It is set according to the lifting characteristics**:
- Characteristics on Encoder N°1 side
- Characteristics on Encoder N°2 side

> **It receives** :
- the speed signals from the 2 incremental encoders
- the functional orders of the lifting control of the handling equipment
- the position of the brake control contactors via contacts NC mechanically linked to the power contacts.

> **It monitors the lifting speed and detects the faults following the orders it receive**:
- Faults of lifting speed.
  Overspeed PV and GV – Kinematic chain breaking
  Static Slipping – Dynamic Slipping
- External system faults
  Encoders – Speed contact – Contactors.
- Internal system faults
  Failure of the **SIDEOS V4** system.

> **In case of Speed or System fault, it drives** :
- the opening of the braking control circuit downstream the control-command circuits via 2 secured output contacts.

> **It transmits to the control-command**:
- the copy of the secured output contacts by making the difference between the opening due to a System fault or a Speed fault.

> **It signals to the operator**:
- the triggering origin via alphanumeric displays.

> **It records**:
- the opening of the output contacts even in case of a mains failure
- the 3 last fault messages.

> When powering on the **SIDEOS V4** or when a RESTART is requested (fault acknowledgment), **it makes a complete AUTOTEST** allowing:
- to test all the checking functions of the safety chain by simulating the System and Overspeed faults, without making a shunt,
- to detect all the internal failures (DCavg ≥ 99%),
- the contacts closing when the AUTOTEST is validated.

Access to the parameters is protected by a password.

Automatic lowering control

AUTOMATIC LOWERING CONTROL

AFR5

Lowering monitoring and control enclosures



AFR5 enclosures are tailor-made to monitor, secure and control the regulated braking of each installation whatever its configuration.
They enable:
- the brakes opening and closing (normal operation)
- the speed regulation for load lowering (regulated brake opening)
- the deceleration regulation (regulated brake closing)

They include modules:
- **SIDEOS** for speed monitoring
- **CRD™** for deceleration regulation
- **CRV™** for speed regulation

For safety level up to PLd

Example of AFR5-SG enclosure

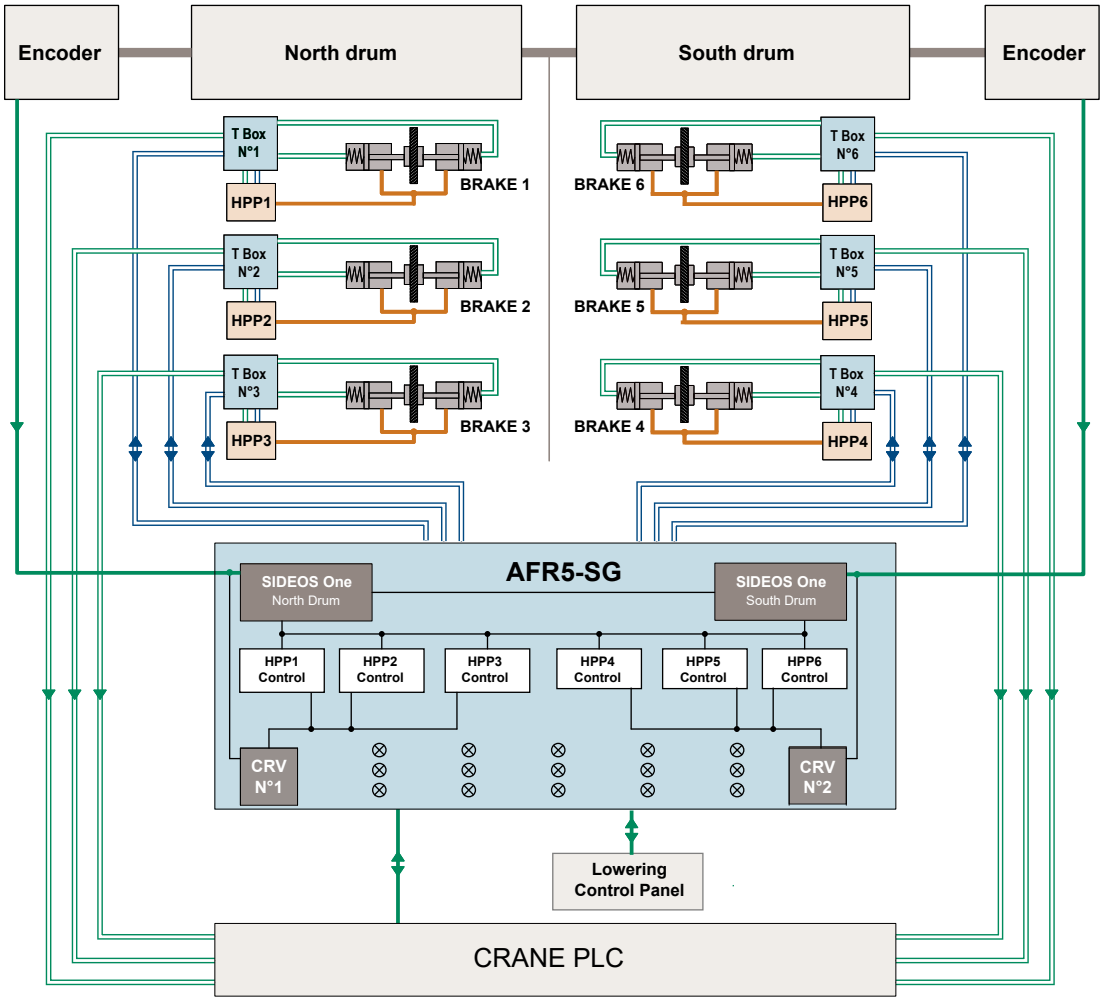

Automatic lowering control

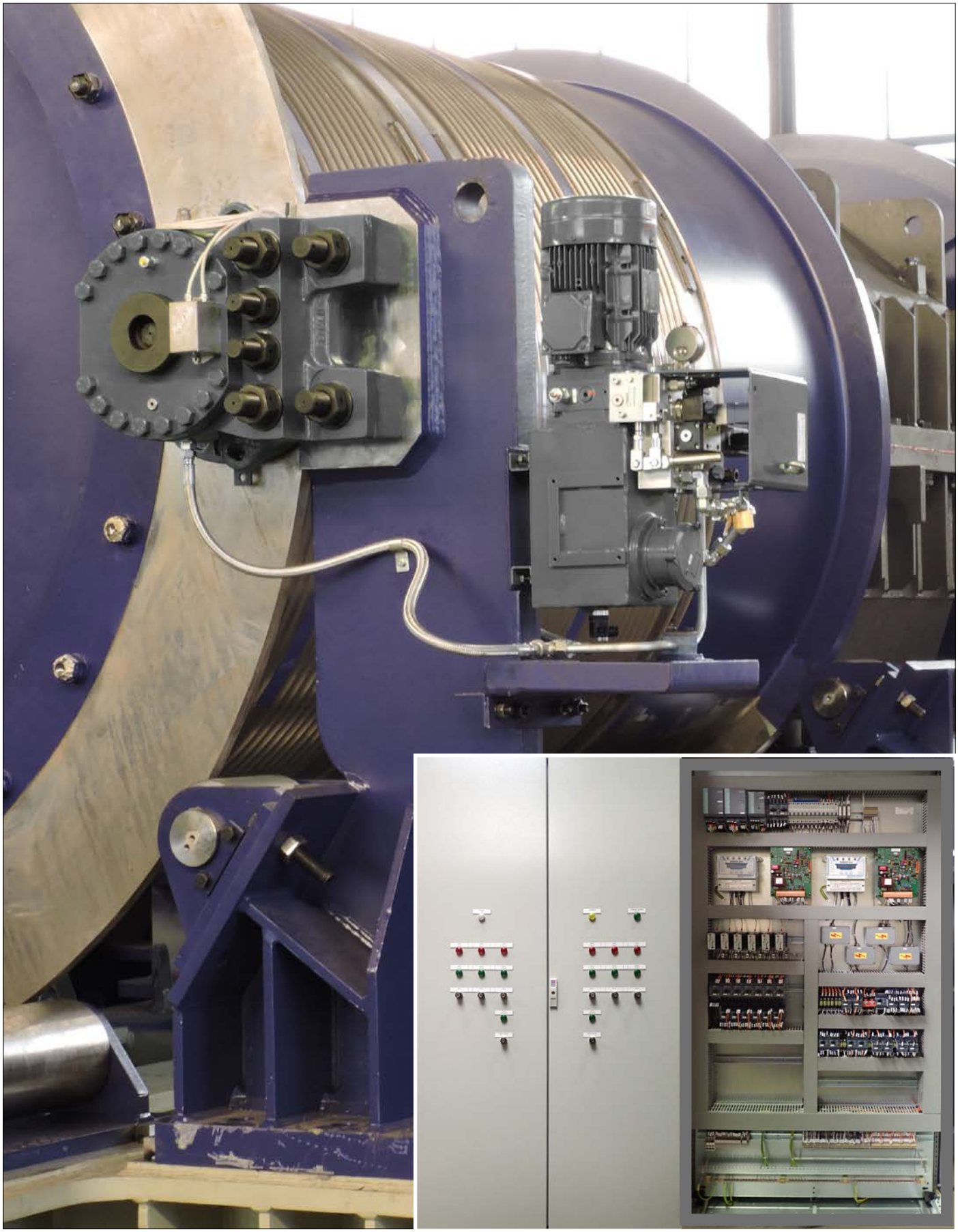

AFR5 enclosure for AoN or regulated braking for HOISTING APPLICATION

Automatic Lowering Control

AFR5 ENCLOSURES

Revision number: M10105-01-E Revision date: 03.06.2015

AFR5 control enclosures are designed for controlling and monitoring regulated braking systems. They are custom designed to meet the exact needs of the installation.

They allow different braking modes :

- Constant deceleration (**CRD**™ module)
  ex. : Cableway : Pic du Midi (Bagnères de Bigorre)
- Constant deceleration and speed regulation (**CRD** module)
  ex. : Passengers elevator : Eiffel Tower in Paris
- Normal operation (AoN) and speed regulation for load lowering (**CRV**™ module)
  ex. : Steel industry ladle crane : HKM (Germany)

They can be designed to ensure a safety performance level up to PL d to the braking system.

They can includes :

- an Ethernet line towards the customer PLC,
- the braking management in case of power supply loss or regulated braking fault,
- the speed monitoring (**SIDEOS One**),
- the control of standby brakes or/and Hydraulic Power Packs to ensure the operation continuity in case of failure of one part of the braking system,
- a Human Machine Interface or Module.



Example: AFR5-HKM enclosure

All or Nothing braking - Load lowering - Performance level PLd - Standby brakes
Data transmission to the customer PLC via ProFibus and secured ProFiBus.

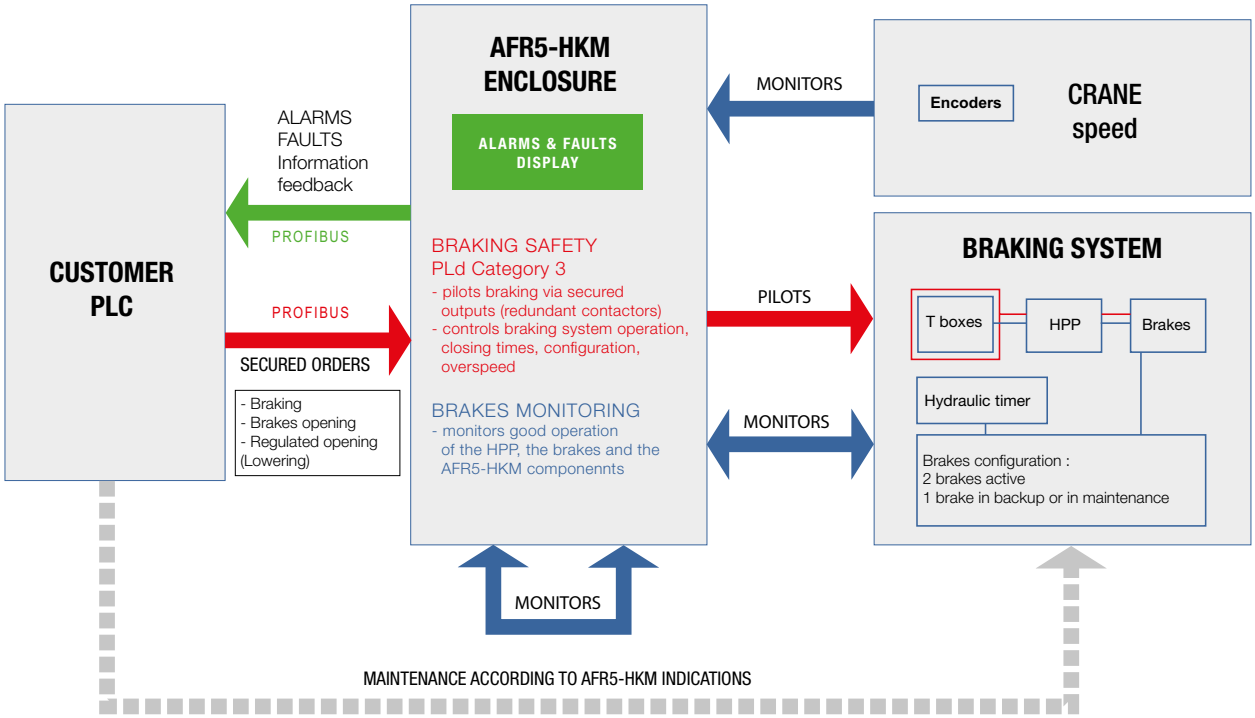

AFR5 ENCLOSURES

Revision number: M10105-01-E Revision date: 03.06.2015

Example: HKM Braking System monitored and controlled by AFR5-HKM enclosure

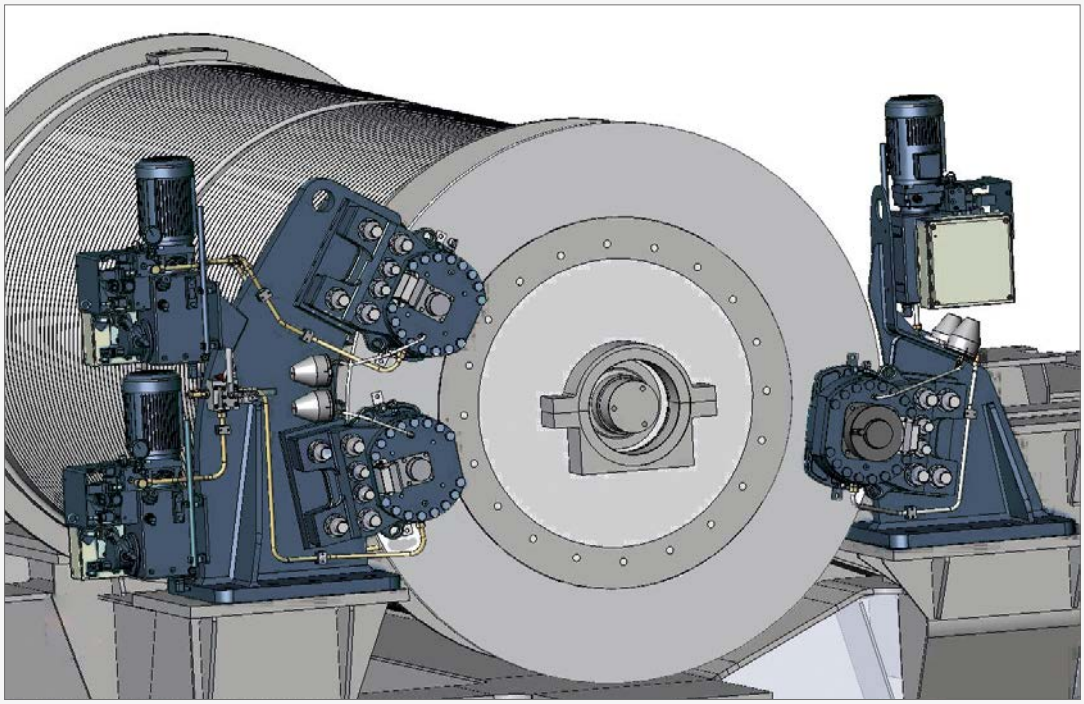

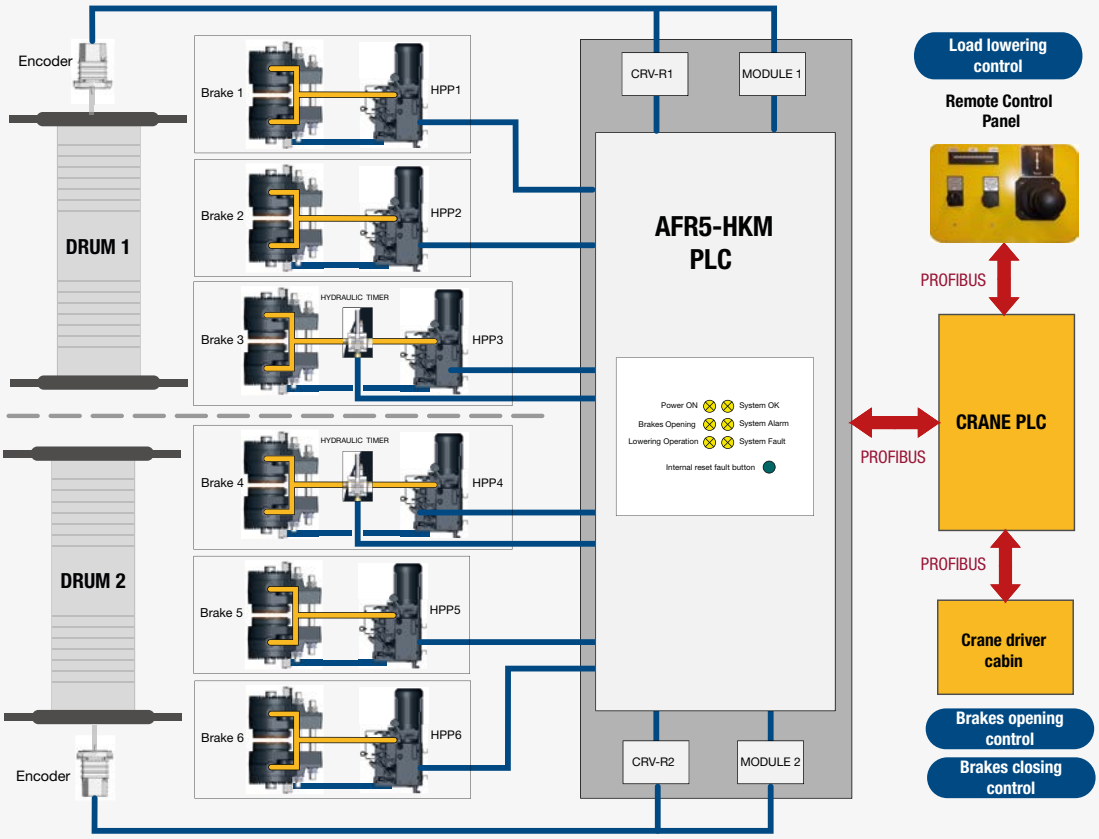

CRD™ MODULE

Revision number: M08950-01-C Revision date: 03.06.2015

PRESENTATION

The **CRD**™ module, combined with **5KE. 650E. TY5. TH** and **SH** type brakes allows a constant deceleration regulated braking whatever the speed, the load and the kind of load, driving or resisting.
CRD board(s) are in a separate control unit or they are integrated in a control enclosure**.**
Applications: cableways, chairlifts, funiculars, lifts, belt conveyors, transporters ...

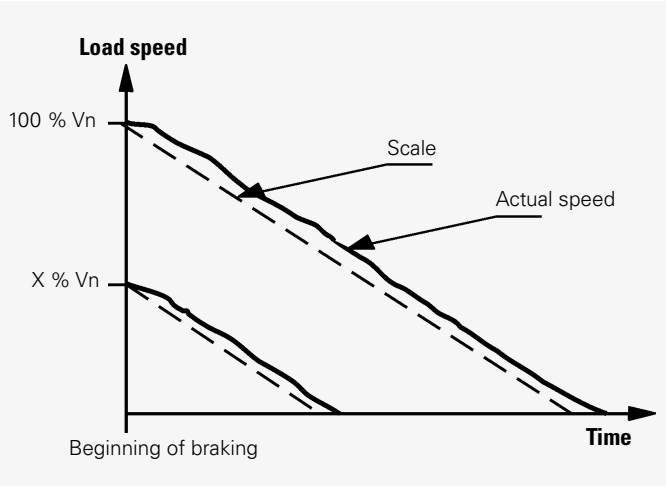

PRINCIPLE

CRD system consists of:
- 1 or more brakes (progressive brakes type **5KE. 650E. TY5. TH** and **SH**).
- 1 hydraulic pack (**STE210Y5. CE8L-RY5**) or 1 electric power supply (AB8. ATP2. ATP24).
- 1 (or more) speed sensors (tachometric dynamo..).
- 1 **CRD** module, it may be integrated into an **AFR5** enclosure supplied by Stromag France.

Two **CRD** versions exist:
- **CRD-R**: a deceleration regulation board monitors power units type AB8, ATP2, ATP24 or an electronic amplifier for a proportional pressure limiter of an hydraulic power unit, customer supply the reference speed signal.
- **CRD-RC**: to the regulation board is connected a deceleration control board, fully independant from the regulation board (power supply. speed signal. scale and command).

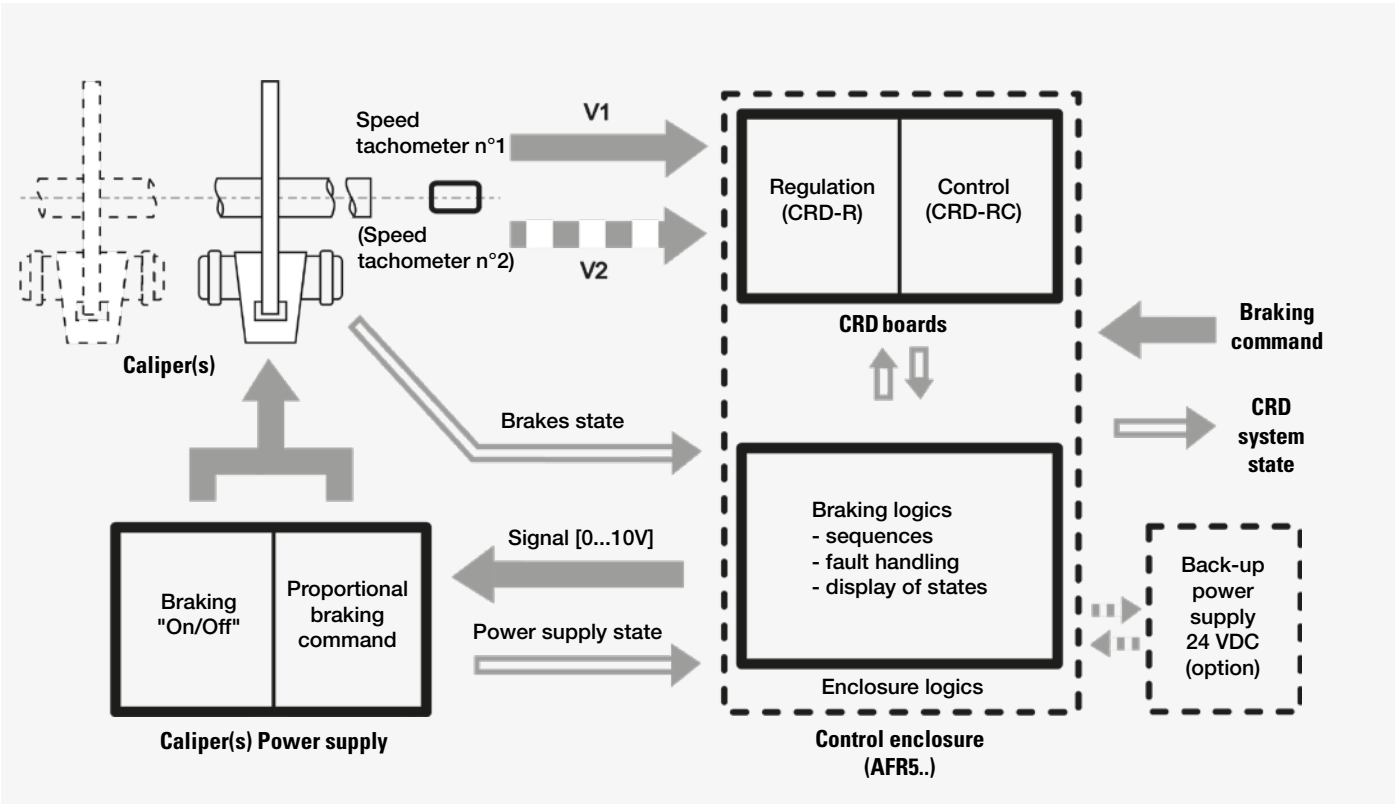

CRD™ MODULE

Revision number: M08950-01-C Revision date: 03.06.2015

For a detailed description of the CRD™ module features, consult the complete technical leaflet on: download.stromagfrance.com

OPERATION

Deceleration regulation

CRD module allows a deceleration regulation according to a scale at the time of a normal or an emergency braking.

Deceleration control (CRD-RC version only)

Using a second speed sensor connected to "deceleration fault control board" insures that first board operating is correct (detected mis-functioning: braking is too low or too high. mecanical shaft or gear box failure. failure of a speed sensor or damaged wires).

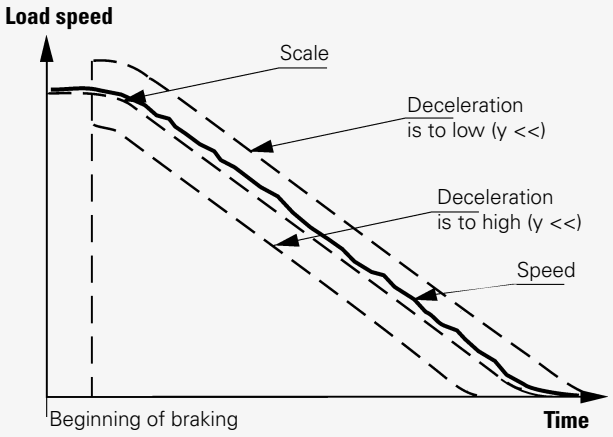

"S" curve deceleration

CRD module allows user to select JERKS at begining and/or end of braking; duration of these "S" curves may be adjusted.

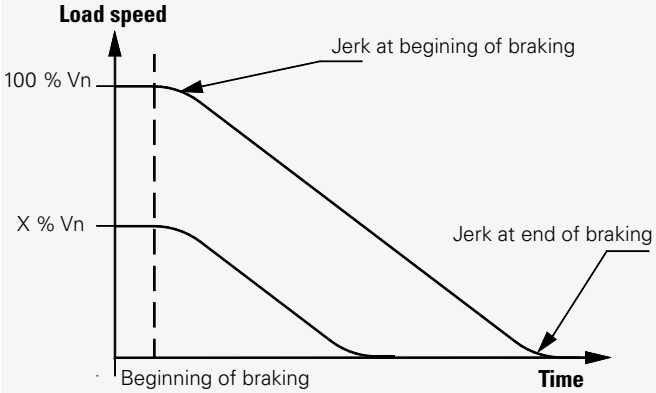

Lowering

CRD module provides lowering function (load is let down on command after a full successful braking, for security purpose) to X % of nominal speed (setting between 5 and 20%), at constant speed, or at variable speed (operator controlled auto "0" recentering joystick).

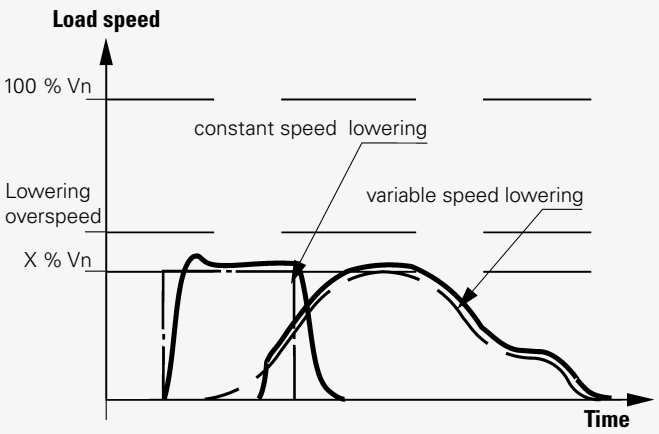

CRV™ MODULE

Revision number: M08955-01-B Revision date: 03.06.2015

PRESENTATION

Speed regulation with **CRV**, in combination with brakes type **5KE**, **650E**, **TY5**, **TH** and **SH**. provides a regulated speed braking whatever the load quantity and load specificity, pulling or resisting.
CRV board(s) are in a separate control unit or they are integrated in a control enclosure**.**
Use: lowering, speed regulation.
Applications: cableways, chairlifts, funiculars, lifts, belt conveyors, transporters, cranes, etc...

PRINCIPLE

CRV system consists of:
- 1 or more brakes (progressive brakes type **5KE. 650E. TY5. TH** and **SH**);
- 1 hydraulic pack (**STE210Y5. CE8L-RY5**) or 1 electric power supply (AB8. ATP2. ATP24).
- 1 (or more) speed sensors (tachometric dynamo..).
- 1 **CRV** module, it may be integrated into an AFR5 enclosure supplied by Stromag France.

Two **CRV** versions exist:
- **CRV-R:** a speed regulation board monitors power units type AB8, ATP2, ATP24 or an electronic amplifier for a proportional pressure limiter of an hydraulic power unit ; customer supply the reference speed signal.
- **CRV-RC:** to the regulation board is connected a speed control board, fully independant from the regulation board (power supply, speed signal, scale and command).

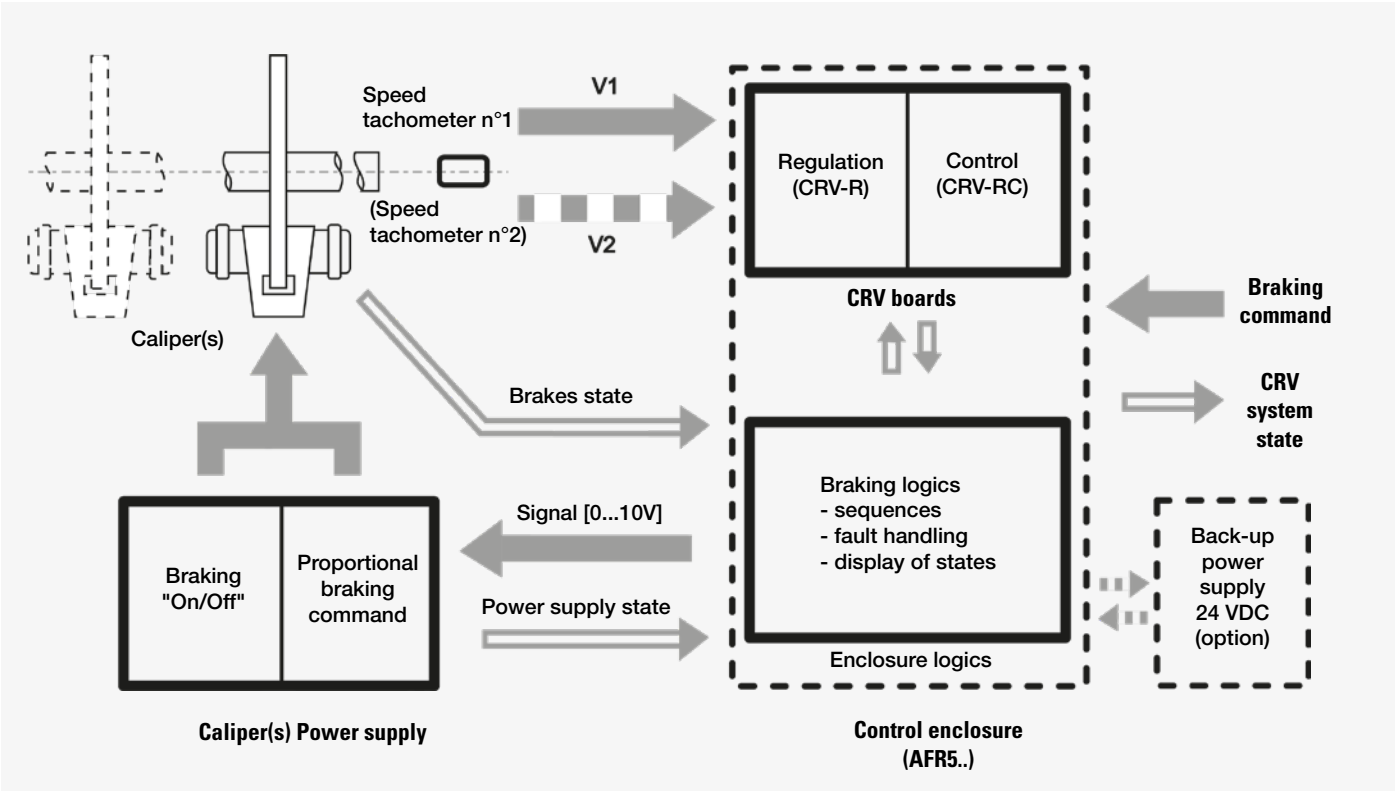

CRV™ MODULE

Revision number: M08955-01-B Revision date: 03.06.2015

For a detailed description of the CRV module features, consult the complete technical leaflet on: download.stromagfrance.com

OPERATION

Lowering

CRV module allows choosing a lowering (regulated load lowering after stop, for security purpose) at X % of nominal speed, (setting between 5 and 20%), at constant speed, or at variable speed (potentiometer with automatic "0" restoring adjusted by operator).

Speed regulation

CRV module allows a speed regulation set at X% of nominal speed (constant speed, factory set between 5 and 100% of nominal speed), failure of a speed sensor or damaged wires).

Speed control (CRV-RC only)

Using an additional speed sensor connected to "speed control" board allows a monitoring of the regulation (detected anomalies: speed too high or too low, mechanical breakdown of shafts or gearbox, speed sensor anomaly or damaged wiring).

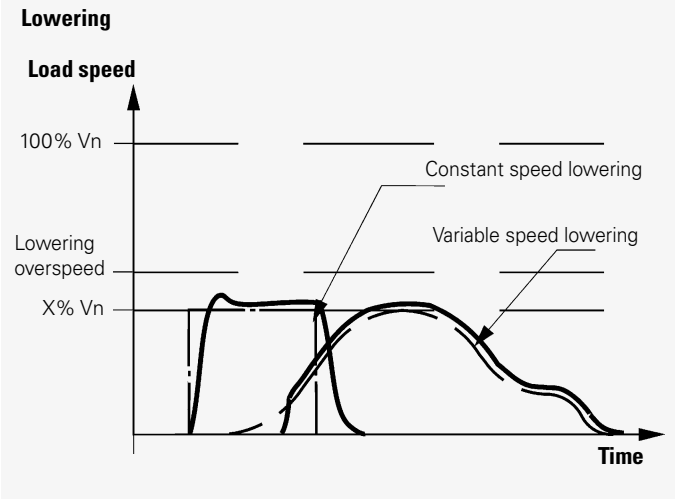

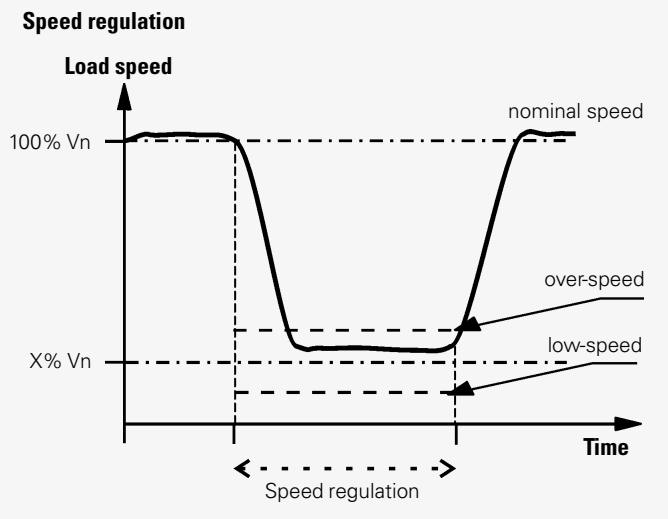

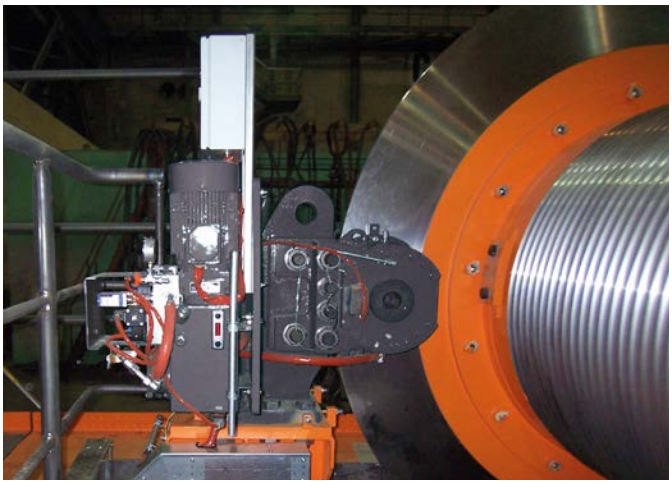



Intelligent Safety Management

SAFETY MANAGEMENT

SIOT | Intelligent systems

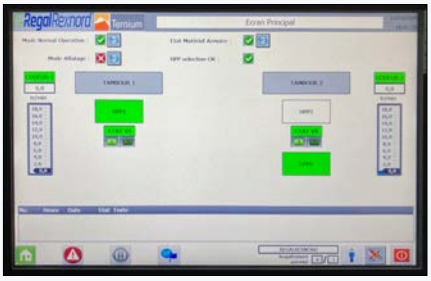

SioT concept offers solutions from safety monitoring to predictive maintenance in accordance to the customer requirments.
Its modularity allows the following functions:

- Speed Monitoring
- HPP Control and Monitoring
- Regulated Braking
- Brake monitoring
- Lifting Monitoring
- Information Exchange
- Data process & communication

The selected system can be upgraded at any time when of the installation requirements have changed.

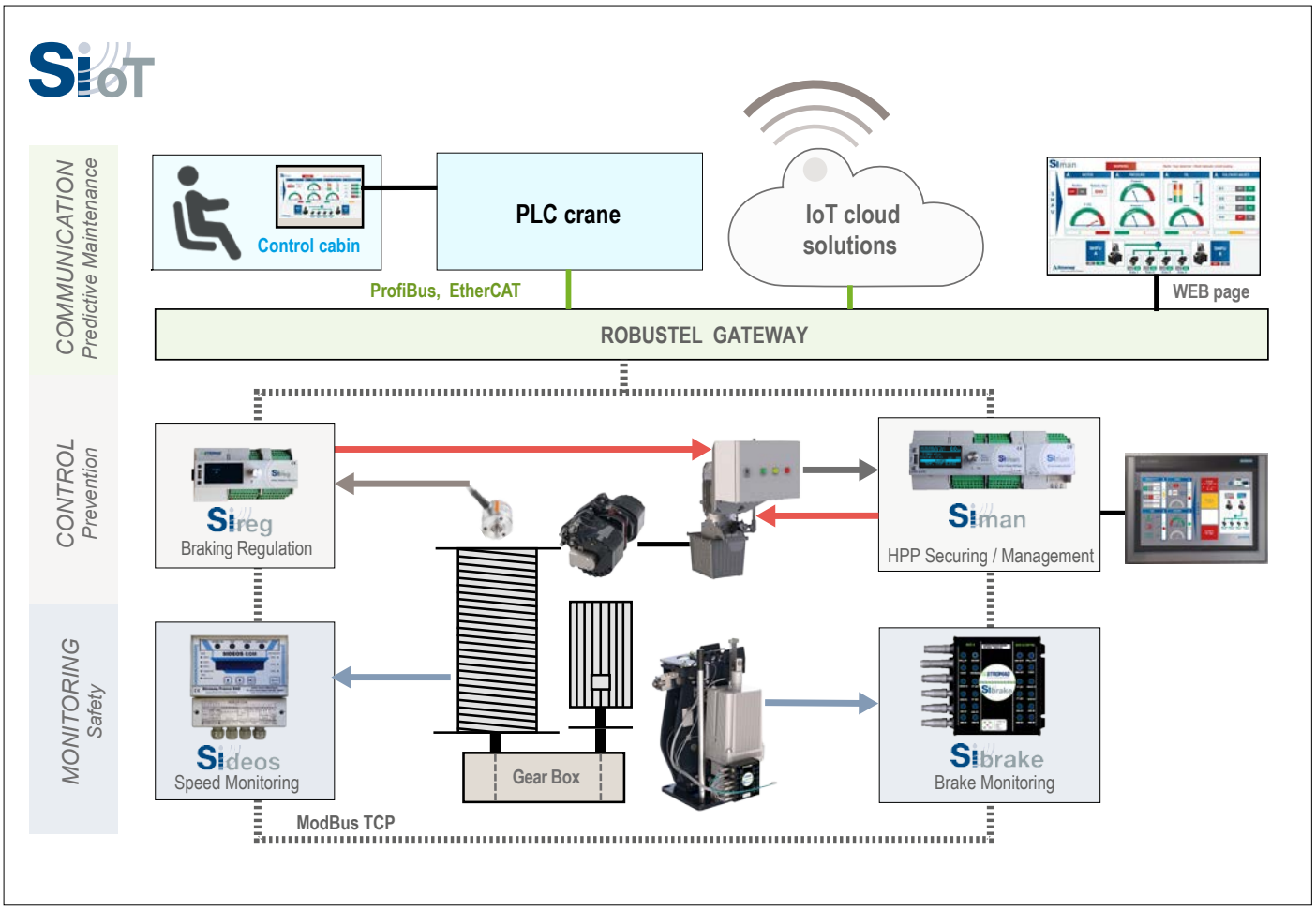

BRAKE MONITORING

SIBRAKE

Brake operation monitoring



The **TDXB-SioT** brakes are fitted with sensors, linear potentiometers and a **SIBRAKE** module for a complete monitoring of the brake operation.

The **SIBRAKE** module collects and processes the raw data into data that can be used for real-time monitoring of the brake and, if requested, for transmission to the IIoT for historical monitoring to allow predictive maintenance.

This module can also be can also be used to monitor a set of two brakes (ex.: two TBXB, TB or SHD brakes) associated on the same disc, or a double-spring hydraulic brake (ex. SH brakes).

Sibrake

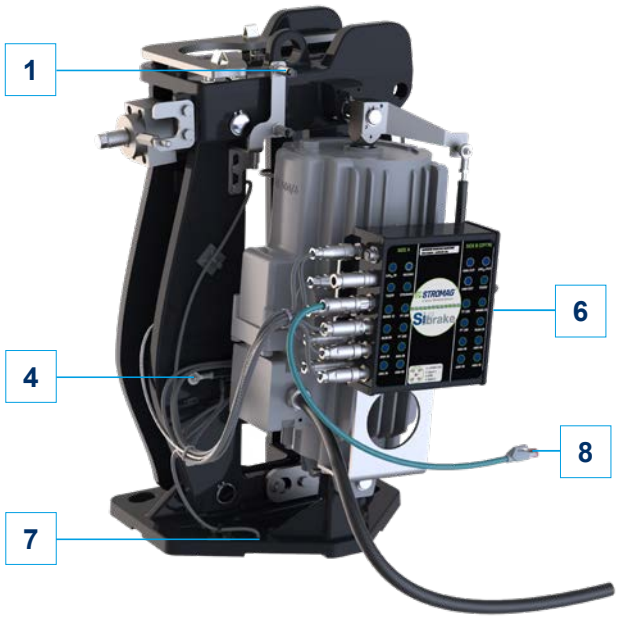

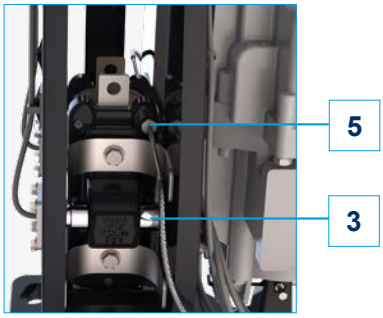

1	Inductive contact	Brake opening
2	Analog linear potentiometer	Thruster stroke
3	Torque pin(s)	Clamping force
4	Analog linear potentiometer	Opening / pads wear
5	PT100 sensors Indicator wires	Temperature Lining wear
6	Module **SIBRAKE**	Data processing
7	PCB chip	Brake tracking
8	MQTT bus mode cable	Transmission



Intelligent Safety Management

CONTROL AND MONITORING OF THE H.P.P.

SIMAN — Safety Intelligent Manager



The **SIMAN** module is a Safety Intelligent Manager system for control and monitoring of the Hydraulic Power Packs.
It is offered in 2 different configuration levels:

- **SIMAN ADVANCED:** for advanced braking functionalities (Delay, Lowering/ Regulation, Soft Braking, Step braking or MOPS).
- **SIMAN SAFETY:** for advanced and safety functionalities

The **SIMAN-CM** module (optional) enables the data communication via an Ethernet network for display to a control center or/and to the IIoT (Cloud Motion Connect) for predictive maintenance.

The **SIMAN** module is integrated in the **K-SI** electrical units of the SHPU Hydraulic Power Packs and can be also integrated in the customer control enclosure.

For safety level up to PLd category 2

Siman *Inputs and outputs diagram*

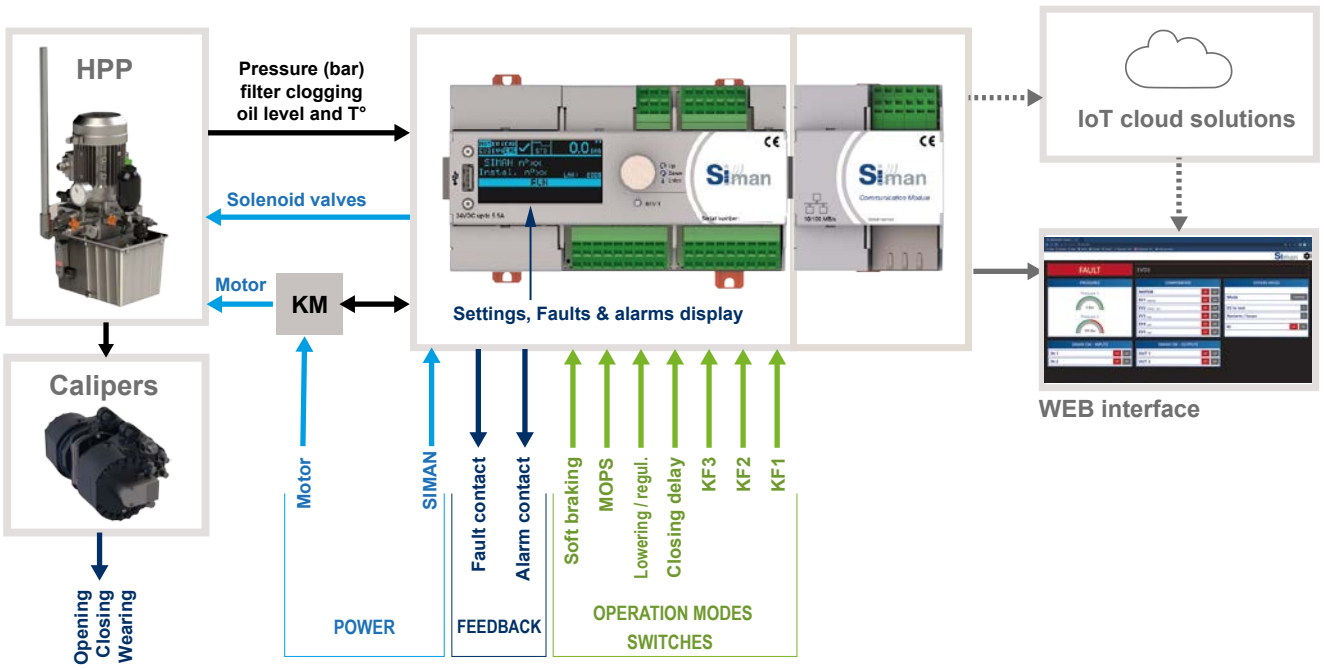

EXAMPLES OF INSTALLATIONS REVAMPING

SIMAN modules with monitoring interface

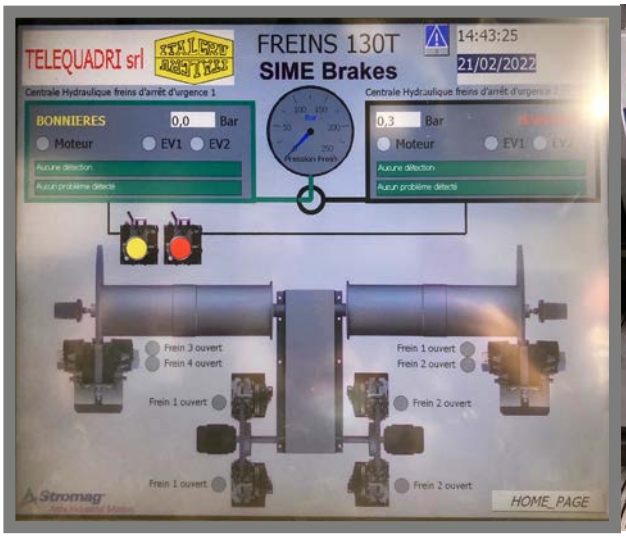



130T ITALGRU ITON Seine crane

K-SI electrical units



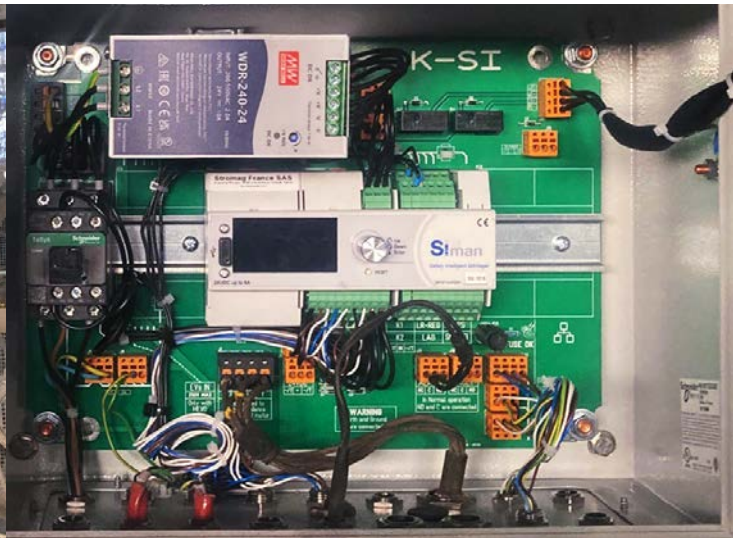

175T TAIM Industeel Le Creusot crane

SIMAN MODULE

Revision number: T10163-02-B Revision date: 28.07.2021

PRESENTATION

The **SIMAN** (**S**afety **I**ntelligent **MAN**ager) is a hydraulic power pack safety manager (see **SHPU** leaflets quoted in bottom page), it allows to drive, monitor and secure:

> Safety functionalities (**SIMAN SAFETY**) :
- Checking of braking possibility
- Detection of locked solenoid valves
- Overpressure detection in Lowering/Regulation mode
- Internal faults detection

> General functionalities (**SIMAN ADVANCED**) :
- Advanced braking functions (Delay, Lowering/Regulation, Soft Braking/Step Braking, MOPS)
- Advanced diagnostics
- Settings profiles (customizables)
- Up to 2 separated hydraulic circuits
- Up to 5 independent solenoid valves with possible eco mode
- 5 assignable detection levels
- Command problems detection
- USB Data exchange (Languages/Settings/Records)

> Operation monitoring (**SIMAN ADVANCED**):
- Over/under pressure detection
- 2 leakages detection levels
- Hydraulic power pack sensors connections
- Motor pump group protection

> Options :
- Inter-products communication (SIoT)
- Multiple solenoid valves voltages (MEVO module)

NOTE

Only the **SAFETY** configuration allows to reach a safety level according to EN ISO 13849-1.
A **SIMAN** supplied with **ADVANCED** configuration allowing standard operation of most installations, does not provide a safety level according to EN ISO 13849-1.

MECHANICAL FASTENING

The **SIMAN** must be mechanically mounted on a rail according to DIN 43880.

ELECTRICAL CONNECTIONS

All **SIMAN** electrical terminals have the following characteristics:

Conductor		section in mm²
rigid	min	0,2
	max	2,5
flexible	min	0,2
	max	1,5
flexible with end without insulating inlet cone	min	0,25
	max	1,5
flexible with end with insulating inlet cone	min	0,25
	max	1,5
AWG conductor cross section	min	24
	max	14

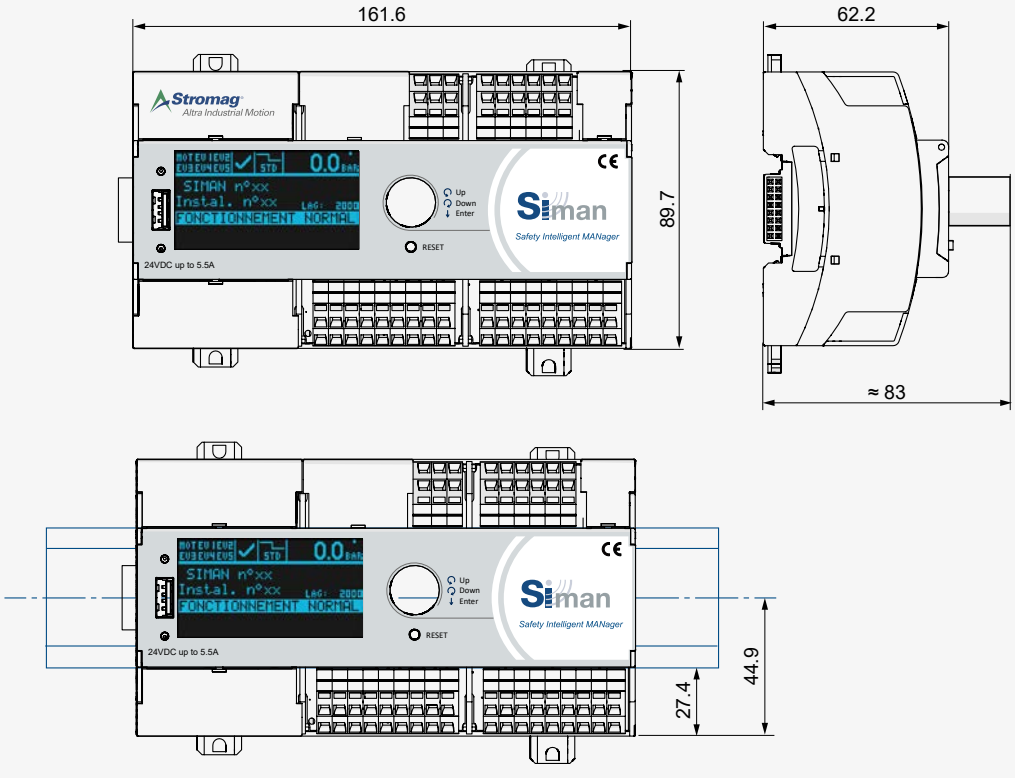

SIMAN on rail

SIMAN MODULE

Revision number: T10163-02-B Revision date: 28.07.2021

For a detailed description of the SIMAN functionalities, consult the complete technical leaflet on: download.stromagfrance.com

SAFETY

Implementation

The machine manufacturer is responsible for the implementation.
For installation, use and checks, it is recommended to take into account this document instructions and also the standards, prescriptions, national or international rules and directives that apply in particular:
Machinery directive 2006/42/EU
Low voltage directive 2014/35/EU
EMC Electromagnetic compatiblity 2014/30/EU

Operation category according to EN ISO 13849-1

The **SIMAN** is a safety manager system for the HPP of the emergency braking system that acts directly on the dangerous phenomena that may occur in an unexpected way (crash risk due to a load fall), it is intended to be used in a part of the control circuit relating to safety (goods and people protection).
It allows to obtain a secured emergency braking control system of category 2 and a performance level PL=d according to the standard ISO/IEC 13849-1.

The control system of the **SIMAN** system faults allows to detect during operation all faults that may lead to the loss of safety function.

Safety data (according to EN ISO 13849-1)

Performance level	**PL**	PLd
Category	**Cat.**	Category 2
Mean Time To hazardous Failure	**MTTFD**	178 years
Average probability of dangerous failure per hour	**PFHD**	PFHD = 2,29 x 10-7
Mission duration	**TM**	20 years
Stop category		Mechanical type 0
Calculation	**PFHD**	500 000 operations / year (1369 / day)

HUMAN / MACHINE INTERFACE

The **SIMAN** has a man/machine interface fitted with a screen, an encoding wheel for navigation in the various menus, a USB port as well as a RESET button for resetting the system.

Encoding wheel

The encoding wheel allows navigation in the different menus and sub-menus of **SIMAN**.
Pressing it once allows validation, pressing it for a long time allows access to the advanced functions, turning it counter clockwise allows going up, and turning it clockwise allows going down.

USB port

The USB port of **SIMAN** allows several functionalities: importing language files, recording the operation of the hydraulic braking system on the installation as well as importing/exporting a configuration.

RESET button

Resetting with the Reset button clears any fault detected by SIMAN. If an opening command is activated, it must be deactivated and then reactivated in order to be taken into account.

Screen

Events description:
Screen - Detection description

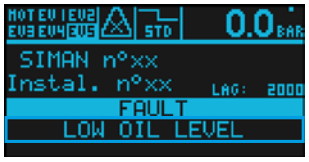

For more details on the current event, press briefly on the encoding wheel.

Events history

A history of the last hundred events containing all the detections is available under: **MAIN MENU ➔ EVENT HISTORY ➔**



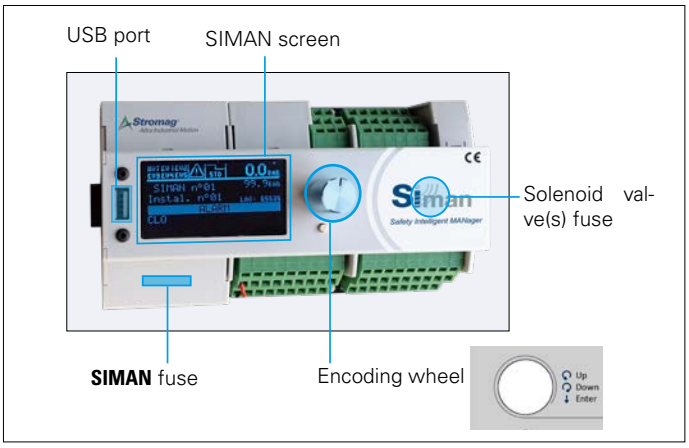

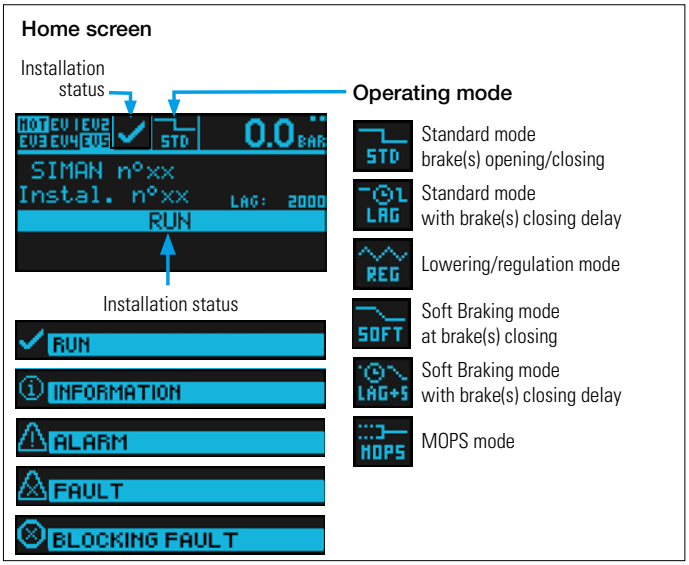

SIMAN MODULE

Revision number: T10163-02-B Revision date: 28.07.2021

SIMAN terminals



								54	52	50			48	46	44	42	40	38							
								53	51	49			47	45	43	41	39	37							
SIMAN																									
		1	3	5	7	9	11	13	15	17			19	21	23	25	27	29	31	33	35				
		2	4	6	8	10	12	14	16	18			20	22	24	26	28	30	32	34	36				

01 – IN Power Supply +24V	15 – IN KM Feedback	29 – 0V	43 – OUT EV2
02 – IN Power Supply 0V	16 – OUT KM Feedback	30 – 0V	44 – OUT EV2 24V
03 – OUT Power Supply CP1 +24V	17 – OUT KM	31 – OUT MOPS Order	45 – OUT EV1
04 – OUT Power Supply CP2 +24V	18 – OUT KM 24V	32 – OUT SB Order	46 – OUT EV1 24V
05 – IN CP1 Signal (0-10V …)	19 – OUT K1 Order	33 – IN MOPS Order	47 – IN K3 Order
06 – IN CP2 Signal (0-10V …)	20 – OUT K2 Order	34 – IN SB Order	48 – OUT K3 Order
07 – 0V	21 – IN K1 Order	35 – 0V	49 – RL ALARM NC
08 – 0V	22 – IN K2 Order	36 – 0V	50 – RL FAULT NC
09 – IN Dry Contact TEMP	23 – 0V	37 – OUT EV5	51 – RL ALARM
10 – OUT Dry Contact TEMP	24 – 0V	38 – OUT EV5 24V	52 – RL FAULT
11 – IN Dry Contact NIV	25 – OUT L/R Order	39 – OUT EV4	53 – RL ALARM NO
12 – OUT Dry Contact NIV	26 – OUT DELAY Order	40 – OUT EV4 24V	54 – RL FAULT NO
13 – IN Dry Contact COL	27 – IN L/R Order	41 – OUT EV3	
14 – OUT Dry Contact COL	28 – IN DELAY Order	42 – OUT EV3 24V	

SIMAN CM MODULE

Revision number: M10163-03-A Revision date: 13.12.2021

PRESENTATION

The **SIMAN CM** (**SIMAN C**ommunication **M**odule) is an optional module for the SIMAN (Safety Intelligent MANager) allowing its connection to an Ethernet network.

Features:

- ModBus TCP Server (Slave)
- WEB server including :
  - **SIMAN** dashboard
  - **SIMAN CM** administration

NOTE !

The **SIMAN CM**, by its design, can only read information contained in a SIMAN. It cannot modify the SIMAN's parameters or impact its operation.

Thus, the **SIMAN CM** has no security impact on the SIMAN.

DANGER !

Safety depends directly on the configuration of the SIMAN. In order to ensure maximum safety, it must be adapted to the installation.
Before use, make sure that the SIMAN leaflet (see reference below) is taken into account by a qualified person in the fields of electronics/ electrics, hydraulics and mechanics.

TECHNICAL CHARACTERISTICS

Dimensions

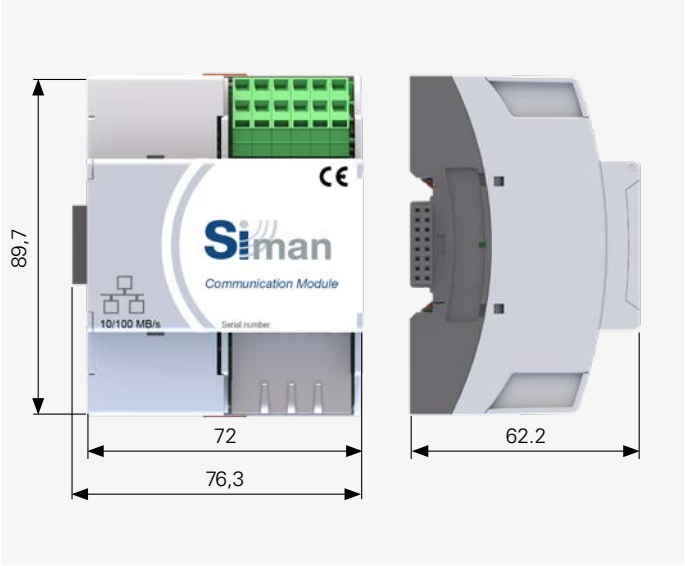

Mechanical mounting

The **SIMAN CM** must be mechanically mounted on a rail according to DIN 43880.

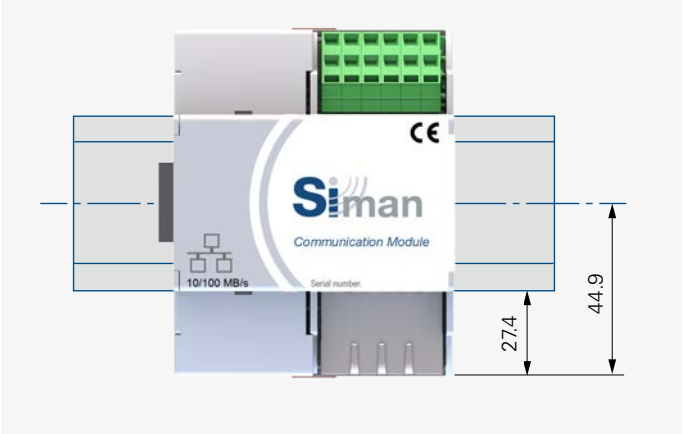

Electrical connections

All the terminals for the **SIMAN CM** electrical connections have the following characteristics:

Conductor		section in mm²
rigid	min	0,2
	max	2,5
flexible	min	0,2
	max	1,5
flexible with ferrule without insulating entry cone	min	0,25
	max	1,5
flexible with ferrule and insulating entry cone	min	0,25
	max	1,5
Conductor section AWG	min	24
	max	14

SIMAN CM MODULE

Revision number: M10163-03-A Revision date: 13.12.2021

Connection terminals

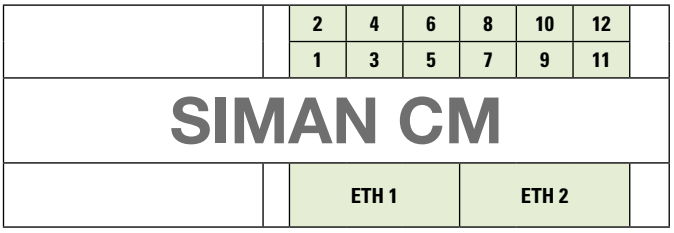

1 – Output 24V 2 – 0V 3 – IN 1 4 – IN 2 5 – Output 24V 6 – 0V	7 – RL1 NO 8 – RL2 NO 9 – RL1 C 10 – RL2 C 11 – RL1 NC 12 – RL2 NC	ETH1 – Ethernet port 1 ETH1 – Ethernet port 2



The two Ethernet ports form an internal switch and are on the same network. They can, for example, be used to perform a "chaining".

K-SI electrical unit for SHPU Hydraulic Power Packs

For control, monitoring and safety functions, SHPU2 and SHPU3 Hydraulic Power Packs can be equipped with a **K-SI** electrical unit. This electrical unit includes a **SIMAN** (Safety Intelligent MANager) and optionally :

- 1 power supply 24VDC 5A or 10A
- 1 **SIMAN CM** (**SIMAN C**ommunication **M**odule) allowing the connection of the SIMAN to an Ethernet network
- 1 **MEVO-5RL** allowing the use of solenoid valve coils other than 24VDC, consult us.

Its operation and characteristics directly depend on the **SIMAN.**



SHPU2 with K-SI unit



K-SI CM MEVO

SIMAN CM MODULE

Revision number: M10163-03-A Revision date: 13.12.2021

CONNECTION to SIMAN and POWER SUPPLY

The **SIMAN CM** must be connected to one and only one SIMAN via the DIN rail backplane connectors supplied with the **SIMAN CM**.
This connection allows the power supply of the **SIMAN CM** and the information collection from the SIMAN.



INPUTS / OUTPUTS

The **SIMAN CM** has two 24V discrete inputs and two relay outputs. These are configurable via the WEB interface and can be read and controlled via ModBus TCP. They are independent of the SIMAN.

WEB INTERFACE

The **SIMAN CM** has a WEB interface allowing the visualization of the information coming from the SIMAN as well as the configuration of the **SIMAN CM**.

The **SIMAN CM** is configured by default with the following IP address: 192.168.1.250/24.
In order to integrate the **SIMAN CM** in a network, it is necessary to modify this configuration via the WEB interface.

ModBus TCP

The **SIMAN CM** includes a ModBus TCP server (Slave). The slave address is set to the value 1.

The server consists of 5 sockets allowing up to 5 simultaneous connections. These sockets all use port 502 by default. The port used can be changed independently for each socket via the WEB interface (a port set to the value 0 disables the socket).

For a detailed description of the SIMAN CM functionalities, consult the complete technical leaflet at: download.stromagfrance.com

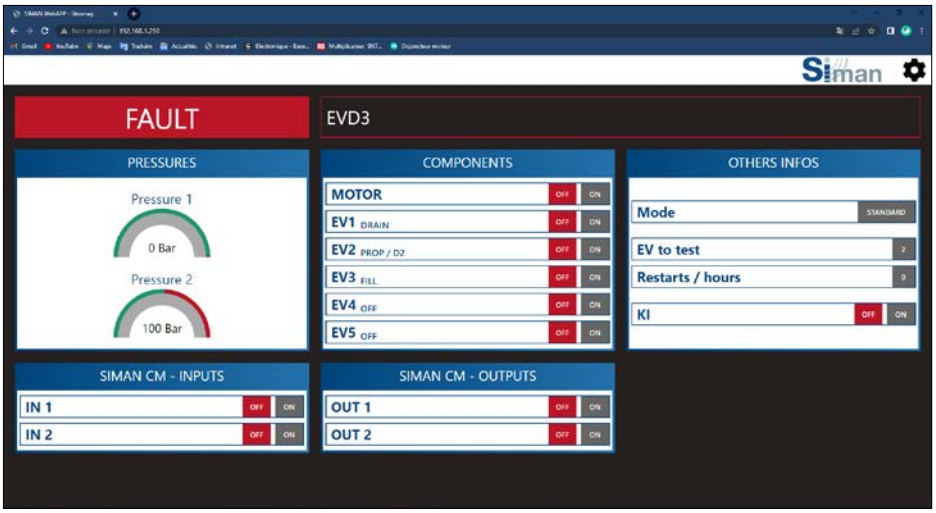

SIMAN CM WEB interface

Speed Monitoring Modules

BRAKING SYSTEM CONTROL

SIGMA | Braking system control and monitoring



SIGMA concept offers tailor-made solutions to monitor and control complete braking systems to secure the installation in every cases (breakdown, failures, overspeed, etc...)

SIGMA cabinets include:

- Monitoring modules for each brakes assembly:
  - 1 **SIMAN** for braking control and HPP monitoring
  - 1 **SIBRAKE** for brake monitoring
- a PLC system, connected to each monitoring module for:
  - data display on local HMI
  - data transfer to the crane PLC
  - selection of the brakes in operation or on back-up mode
- a **SIDEOS** module for:
  - continuous monitoring of the drums speed through incremental encoders
  - sending a stop order to the SIMAN to close the brakes in case of fault as overspeed, differential speed or static slip
- a system for emergency controlled lowering of the load with:
  - 1 **SIREG** module per drum for drum speed management
  - 1 mobile box (wire connected) for safe operation
  - the drums can be operated separately (load tilting) or together (secured operation).

SIGMA concept

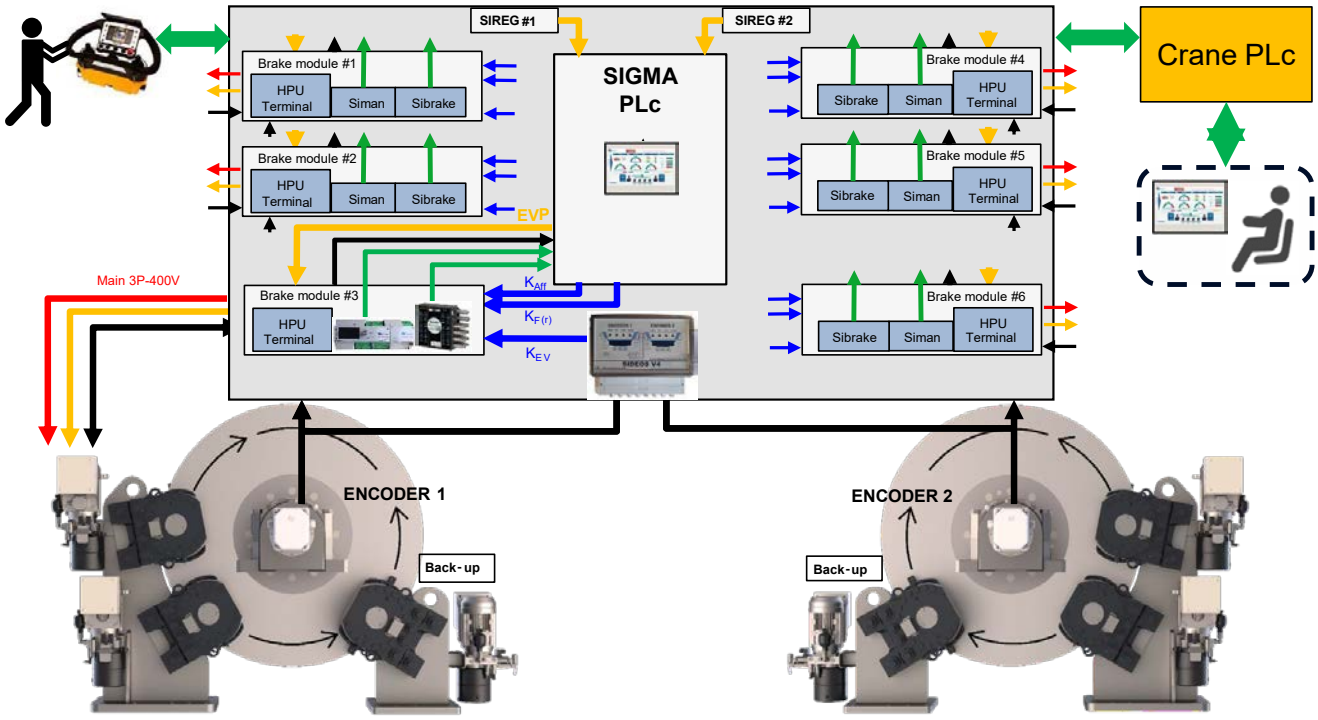

NOTE



Stromag™

stromag.com

Allemange
Hansatraße 120
59425 Unna - Germany
+49 2303 102 - 0
customercare.eu@regalrexnord.com

regalrexnord.com

The proper selection and application of products and components, including assuring that the product is safe for its intended use, are the responsibility of the customer. To view our Application Considerations, please visit https://www.regalrexnord.com/Application-Considerations.

To view our Standard Terms and Conditions of Sale, please visit https://www.regalrexnord.com/Terms-and-Conditions-of-Sale (which may redirect to other website locations based on product family).

"Regal Rexnord" is not indicative of legal entity. Refer to product purchase documentation for the applicable legal entity.

Regal Rexnord and Stromag are trademarks of Regal Rexnord Corporation or one of its affiliated companies.

© 2025, 2026 Regal Rexnord Corporation, All Rights Reserved. MCC-P-8910-SG-EN-A4 11/26

RegalRexnord™